MISSION-CRITICAL
INTERCONNECT
SOLUTIONS

Glenair®

SERIES 970

PowerTrip® Connectors

Quick-Disconnect, High-Current, Harsh-Environment Power Connectors for Rugged Mil-Aero Applications

MAY 2024

MIL-AERO GRADE
LOUVERBAND
CONTACT-EQUIPPED
POWER CONNECTORS

POWER TRIP®

PowerTrip®
The power connector for extreme environments

Protect circuits with Series 970 PowerTrip® connectors

The George HW Bush, pictured above, is the first US Navy surface ship to use the Series 970 PowerTrip® connector. Series 970 connectors fill the need for a military-grade harsh environment power connector with improved mechanical, environmental and electrical performance. PowerTrip® delivers reduced size and weight compared to lower-density 5015 type power connectors. Featuring triple-start mating threads, crimp rear-release contacts, IP68 environmental sealing, and improved EMI protection, PowerTrip® is ideal for power distribution units, hybrid electric drives, motors, and other high current applications.

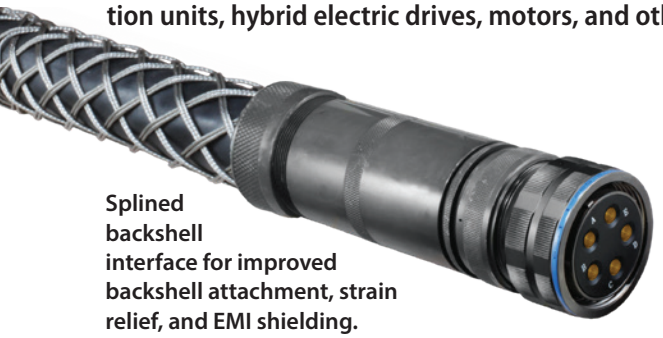

Splined backshell interface for improved backshell attachment, strain relief, and EMI shielding.

Keyed receptacle with superior sealing and EMI shielding

- **Fast, easy mating with triple-start ACME thread: 360° turn for full mating**
- **Reduced size and weight compared to conventional industrial and/or aerospace solutions**
- **LouverBand sockets for improved current ratings**
- **Ratcheting coupling nut for secure mating and high vibration resistance**
- **Operating temperature -65° C to +200° C**
- **IP68+ environmental sealing, 6 ft. for 48 hrs.**

Table of Contents

Introduction

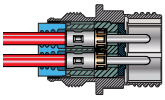

- Features and Benefits 2
- Connector Selection Guide 3

Selection Guide Page 3

General Information and Technical Reference

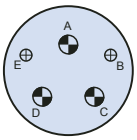

- Insert Arrangements 6-9
- Wire Insulation Diameters 6
- Contact Design, Current Rating 10
- Connector Materials and Finishes 11
- Product Specification 12-14
- Material and Finish Options 15
- PowerTrip® for Space Flight 16

Insert Arrangements Pages 6-9

Cable Connectors Environmental

- 970-001 Plug with Accessory Thread 17
- 970-011 Plug with Banding Platform 19
- 970-005 Receptacle with Accessory Thread 21
- 970-033 Receptacle with Banding Platform 23
- Overmolded Turboflex® Cordsets 25

Square Flange Receptacles, Environmental

- 970-003 Square Flange Receptacle with Accessory Thread 26
- 970-032 Square Flange Receptacle with Banding Platform 28
- 970-009 Low Profile Square Flange Receptacle 30
- 970-013 Low Profile Square Flange Receptacle w/ O-Ring 32
- 970-008 Square Flange Receptacle, #8 PC Tails 34

Jam Nut Receptacles, Environmental

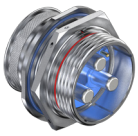

- 970-004 Jam Nut Receptacle with Accessory Thread 37
- 970-031 Jam Nut Receptacle with Banding Platform 39
- 970-010 Low Profile Jam Nut Receptacle 41
- 970-006 Feed-Thru Bulkhead Jam Nut Receptacle 43

Hermetic and Filter Receptacles

- 970-012 Hermetic Square Flange Receptacle 45
- 970-030 Hermetic Square Flange Receptacle with O-ring 47
- 970-038 Hermetic Receptacle with Crimp Contacts 49
- 970-025 Hermetic Jam Nut Receptacle 51
- 970-041 Lightweight Hermetic Jam Nut Receptacle 53
- 970-007 Hermetic Jam Nut Feed-Thru 55
- 970-026 Hermetic Jam Nut Feed-Thru w/ (2) O-rings 57
- 240-970 Filter Receptacle 59

Contacts and Tools

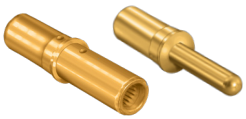

- Crimp Contacts 62
- Bus Bar Contacts 64
- Crimping Tools, Assembly Tools, Sealing Plugs 65
- Banding Tools and Straps 66
- Connector Holding Tools 67

Backshells and Accessories

- Selection Guide 68
- 620PS076 Strain Relief 69
- 870P001 Swing-Arm Clamp 70
- 310P*001 Shrink Boot Adapter 71
- 770-003S Heatshrink Boot 72
- 370P*024 Environmental Backshell 73
- 380P*105 EMI Backshell 75
- 390P*055 EMI + Environmental Backshell 77
- 440P*069 EMI Banding Backshell 79
- 390PS036 Heavy Duty Backshell with Saddle Clamp 81
- 390PS086 Heavy Duty Backshell with Wire Mesh Cordgrip 82
- 660PS097 Protective Cover for Plug Connector 83
- 660PS098 Protective Cover for Receptacle Connector 84
- 780-001 Bean Rubber Cover for Plug Connector 85
- 780-002 Bean Rubber Cover for Receptacle Connector 86
- 930-014 Flange Gasket 87
- 809-532 Self-Locking Jam Nut 88

Accessories Selection Guide Page 68

© 2024 Glenair, Inc • 1211 Air Way, Glendale, CA 91201 • 818-247-6000 • www.glenair.com • U.S. CAGE code 06324 • Series 970 PowerTrip Connectors
Dimensions in Inches (millimeters) are subject to change without notice.

Rev. 11.12.24

Introduction
Features and Benefits

INTRODUCTION

Series 970 PowerTrip®

The Series 970 PowerTrip® connector is a quick-disconnect, self-locking aerospace grade power connector with EMI shielding capability and improved environmental protection compared to conventional aerospace-grade power and signal connectors. Insert arrangements include size 8, 4, 1/0 and 2/0 high ampacity contacts for DC, single phase AC and three phase AC power feed requirements. Auxilliary size 16 and 12 contacts are last-mate/ first-break for interlock circuits.

- Quick-disconnect self-locking aerospace-grade power connector
  - 2000 VAC (DWV)
  - -65° to +200°C
  - EMI ground spring
- Crimp, rear-release contacts
- High shock, high vibration
- Advanced environmental sealing: 6 feet / 48 hour water pressure rating
- High ampacity contacts
- 5 key polarizing
- Splined backshell interface
- Triple start stub ACME thread
- Hermetic receptacles
- Integral banding platform
- Bus bar contacts
- Gold or silver plated contacts

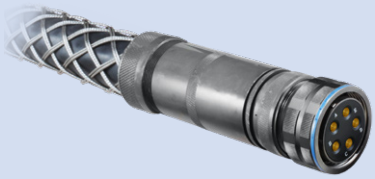

PowerTrip® Accessories

A full range of backshells, protective covers and assembly tools including heavy duty M28840 type EMI backshells rated for 6 feet water immersion. The backshell-to-connector interface features radial splines for higher strength and improved EMI shielding.

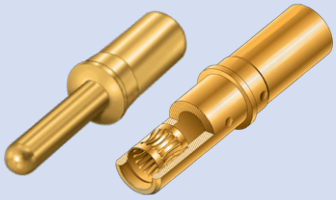

High Ampacity LouverBand Contacts

Low-resistance PowerTrip® LouverBand socket contacts have beryllium copper springs for improved electrical performance and increased durability. Contact bodies are machined from high IACS (>96%) copper alloy.

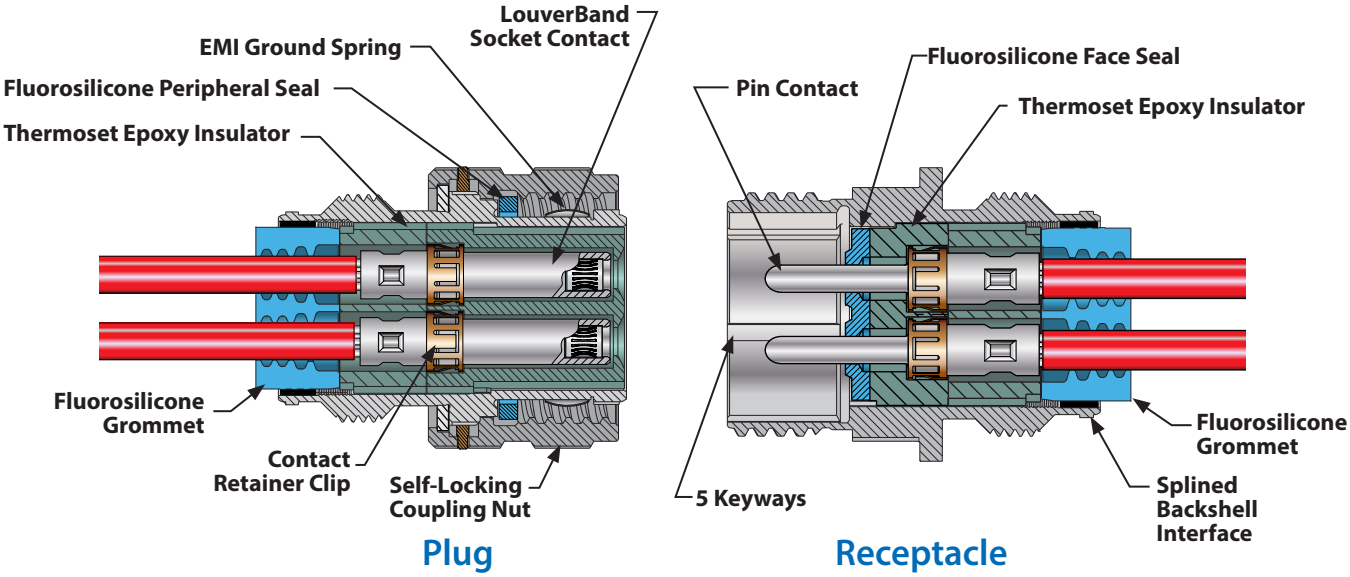

© 2024 Glenair, Inc • 1211 Air Way, Glendale, CA 91201 • 818-247-6000 • www.glenair.com • U.S. CAGE code 06324 • Series 970 PowerTrip Connectors
Dimensions in Inches (millimeters) are subject to change without notice.

Introduction
Connector Selection Guide

Cable Connectors Environmental

Plug with Accessory Thread
970-001
Page 17

Plug with Banding Platform
970-011
Page 19

Receptacle with Accessory Thread
970-005
Page 21

Receptacle with Banding Platform
970-033
Page 23

Overmolded Turboflex Cordsets
Page 25

Square Flange Receptacles, Environmental

Square Flange Receptacle with Accessory Thread
970-003
Page 26

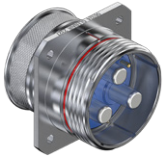
Square Flange Receptacle with Banding Platform
970-032
Page 28

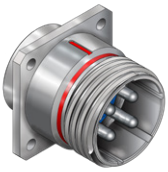
Low Profile Square Flange Receptacle
970-009
Page 30

Low Profile Square Flange Receptacle w/ O-ring
970-013
Page 32

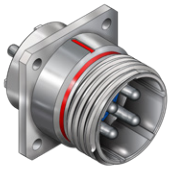
Square Flange Receptacle w/ PC Tails
970-008
Page 34

Jam Nut Receptacles, Environmental

Jam Nut Receptacle with Accessory Thread
970-004
Page 37

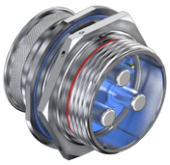
Jam Nut Receptacle with Banding Platform
970-031
Page 39

Low Profile Jam Nut Receptacle
970-010
Page 51

Feed-Thru Bulkhead J/N Receptacle
970-006
Page 53

Hermetic Receptacles

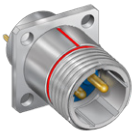
Square Flange Hermetic Receptacle
970-012
Page 45

Square Flange Hermetic Receptacle w/ O-ring
970-030
Page 47

Square Flange Hermetic Recep w/ Crimp Contacts
970-038
Page 49

Jam Nut Hermetic Receptacle
970-025
Page 51

CODE RED Lightweight Jam Nut Feed-Thru Bulkhead Hermetic Receptacle
970-041
Page 53

Jam Nut Feed-Thru Bulkhead Hermetic Receptacle
970-007
Page 55

Jam Nut Feed-Thru Bulkhead Hermetic Receptacle w/ (2) O-rings
970-026
Page 57

Filter Receptacles

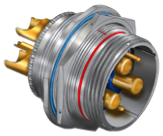
Jam Nut Filter Receptacle
240-970J
Page 59

Square Flange Filter Receptacle
240-970W
Page 59

POWERTRIP

POWER CONNECTORS FOR EXTREME ENVIRONMENTS

POWER TRIP®

The PowerTrip® Ecosystem:

Contacts · Connectors Cables · Accessories

Contact Crimping, Banding, and Assembly Tools

Environmental Heat Shrink Boots

LouverBand Contacts

EMI / Environmental Backshells

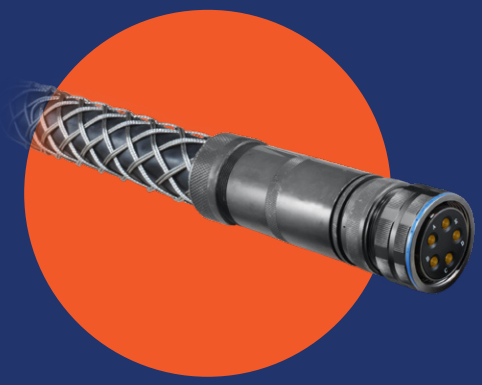

Wire Mesh Strain Relief Cable Grips

© 2024 Glenair, Inc • 1211 Air Way, Glendale, CA 91201 • 818-247-6000 • www.glenair.com • U.S. CAGE code 06324 • Series 970 PowerTrip Connectors
Dimensions in Inches (millimeters) are subject to change without notice.

Auxiliary
Ground Straps

Dustcaps and
Protective Covers

Turnkey Overmolded
TurboFlex Cable Assembly

Cable Strain Relief
Backshells

Environmental, Hermetic,
and Filter Receptacles

Integrated Shield Termination
Banding Porch

General Information and Technical Reference

Insert Arrangements, Current Rating, Wire Dia. Sealing Range

GENERAL INFORMATION

SERIES 970 INSERT ARRANGEMENTS

Insert Arrangement	Contact Size and Quantity					
	#16	#12	#8	#4	#1/0	#2/0
18-2			2			
18-4		2	2			
20-3			3			
20-4			4			
20-5		2	3			
20-7	4		3			
24-1					1	
24-2				2		
24-3				3		
24-5			5			
24-6		4		2		
24-A1						1
24-A6		3		3		
28-12	6		6			
28-15	15					
28-4				4		
28-8		1	7			
28-9	5			4		
32-12	2		10			
32-2					2	
32-20	1	19				
32-3					3	
32-4				2	2	
32-5				5		
32-6		3			3	
32-7				7		
32-A22		22				
36-16	3		13			
36-2						2
36-4					4	
36-9	14	14	2	1		
36-A8				8		
36-B8	4				4	
40-10	16		9	4		
40-21			21			
40-5					5	

CURRENT RATING

Contact Size	Amps Environmental	Amps Hermetic
16	13	10
12	23	17
8	60	33
4	100	60
1/0	175	100
2/0	205	150

RECOMMENDED WIRE INSULATION DIAMETERS

This table shows minimum and maximum wire diameters compatible with Series 970 connectors. Wires smaller than specified will not seal properly. Wires larger than specified will be difficult to install and extract.

Wire Size (AWG)	Cavity Size	Wire Outside Diameter			
		Min		Max	
		in	mm	in	mm
16	16	0.053	1.35	0.103	2.62
12	12	0.085	2.16	0.158	4.01
10	8	0.187	4.75	0.203	5.16
8	8	0.187	4.75	0.203	5.16
6	4	0.28	7.11	0.32	8.13
4	4	0.28	7.11	0.32	8.13
2	1/0	0.465	11.81	0.5	12.7
1/0	1/0	0.465	11.81	0.5	12.7
2/0	2/0	0.59	14.99	0.63	16

© 2024 Glenair, Inc • 1211 Air Way, Glendale, CA 91201 • 818-247-6000 • www.glenair.com • U.S. CAGE code 06324 • Series 970 PowerTrip Connectors
Dimensions in Inches (millimeters) are subject to change without notice.
Rev. 08.30.2024

INSERT ARRANGEMENTS

CONTACT SYMBOLS

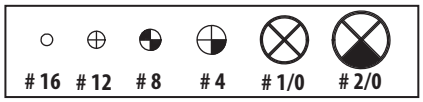

Mating face of pin connector. Sockets are reversed.

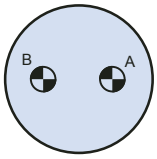

18-2
2 #8 Contacts

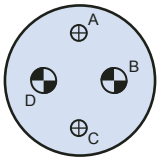

18-4
2 #8, 2 #12 Contacts

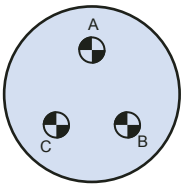

20-3
3 #8 Contacts

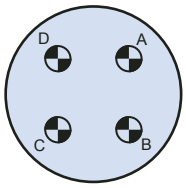

20-4
4 #8 Contacts

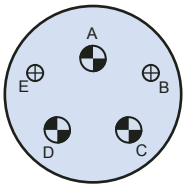

20-5
3 #8, 2 #12 Contacts

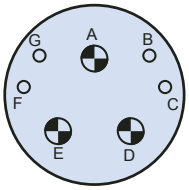

20-7
3 #8, 4 #16 Contacts

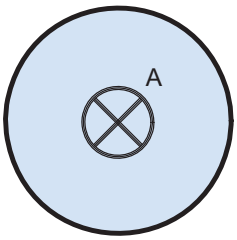

24-1
1 #1/0 Contact

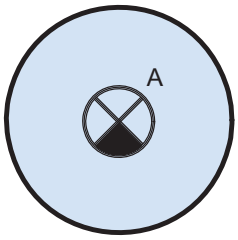

24-A1
1 #2/0 Contact

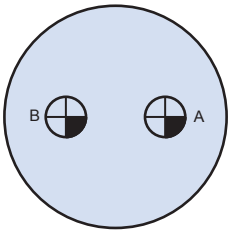

24-2
2 #4 Contacts

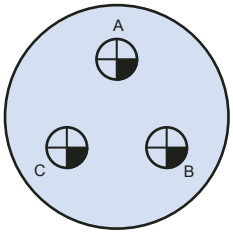

24-3
3 #4 Contacts

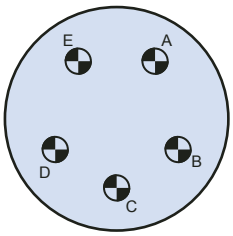

24-5
5 #8 Contacts

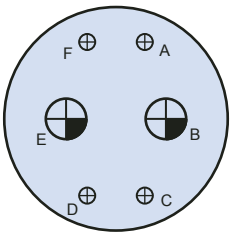

24-6
2 #4, 4 #12 Contacts

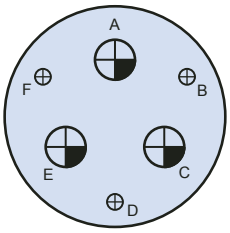

24-A6
3 #4, 3 #12 Contacts

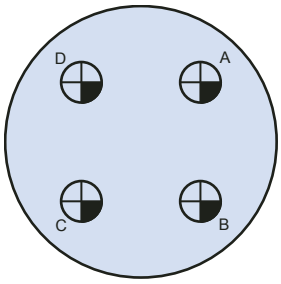

28-4
4 #4 Contacts

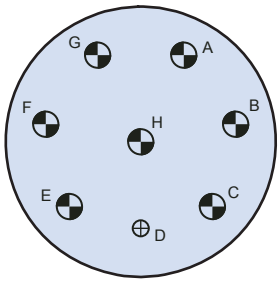

28-8
7 #8, 1 #12 Contacts

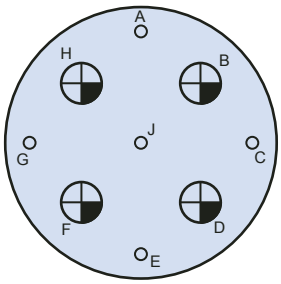

28-9
4 #4, 5 #16 Contacts

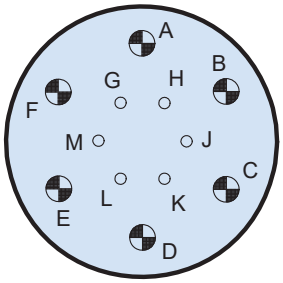

28-12
6 #8, 6 #16 Contacts

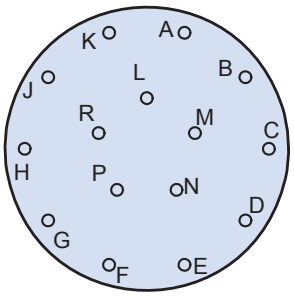

28-15
15 #16 Contacts

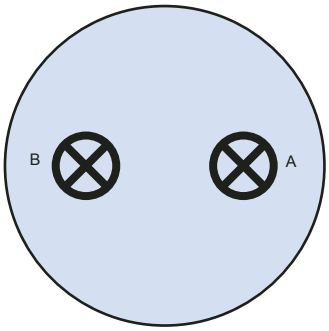

32-2
2 #1/0 Contacts

General Information and Technical Reference
Insert Arrangements

INSERT ARRANGEMENTS

CONTACT SYMBOLS

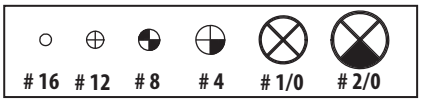

Mating face of pin connector. Sockets are reversed.

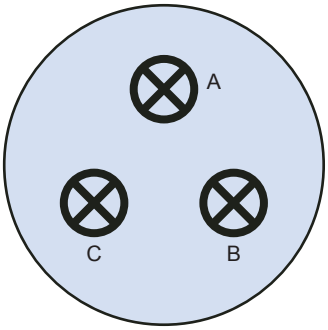

32-3
3 1/0 Contacts

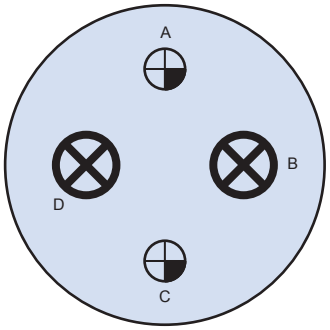

32-4
2 #1/0, 2 #4 Contacts

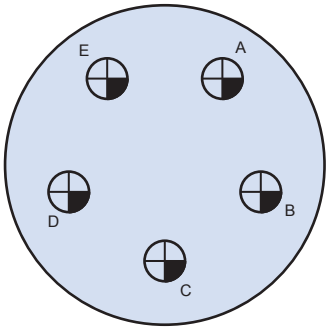

32-5
5 #4 Contacts

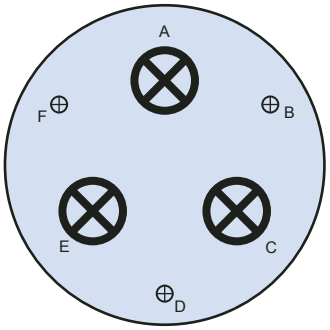

32-6
3 #1/0, 3 #12 Contacts

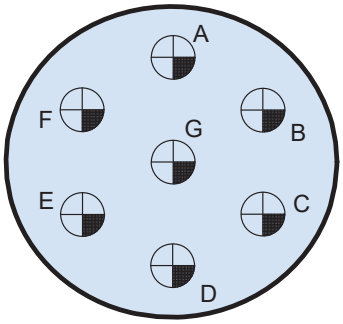

32-7
7 #4 Contacts

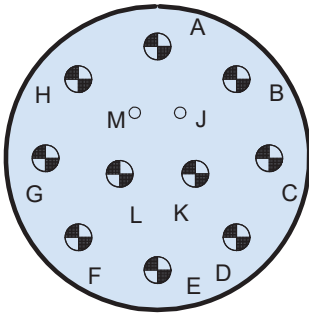

32-12
10 #8, 2 #16 Contacts

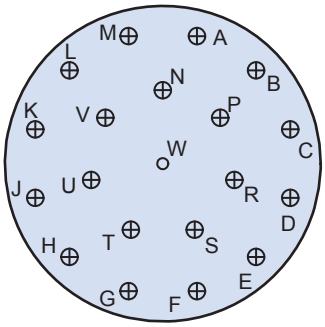

32-20
1 #16, 19 #12 Contacts

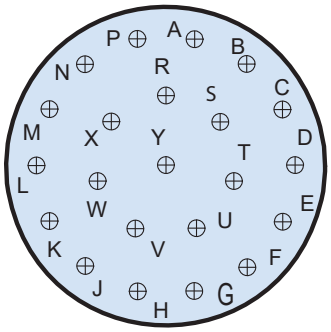

32-A22
22 #12 Contacts

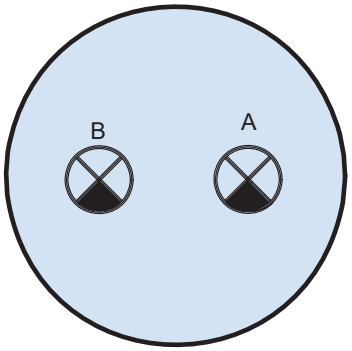

36-2
2 #2/0 Contacts

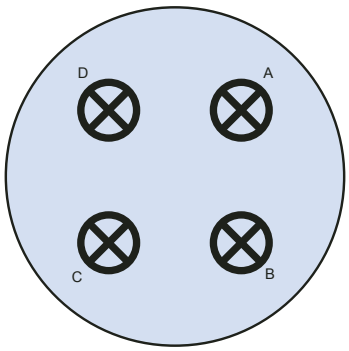

36-4
4 #1/0 Contacts

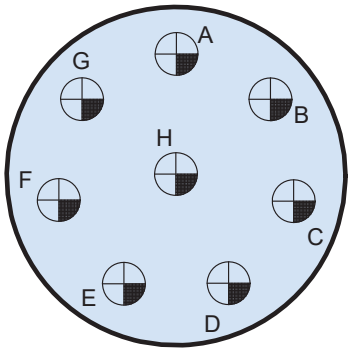

36-A8
8 #4 Contacts

© 2024 Glenair, Inc • 1211 Air Way, Glendale, CA 91201 • 818-247-6000 • www.glenair.com • U.S. CAGE code 06324 • Series 970 PowerTrip Connectors
Dimensions in Inches (millimeters) are subject to change without notice.

INSERT ARRANGEMENTS

CONTACT SYMBOLS

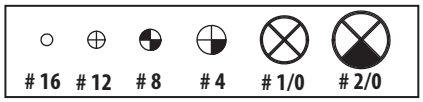

Mating face of pin connector. Sockets are reversed.

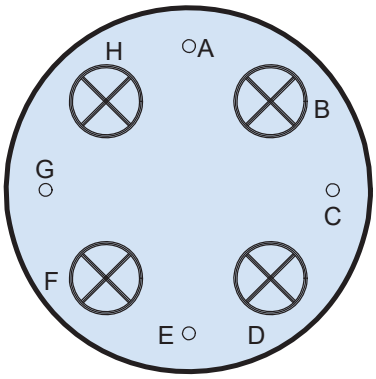

36-B8
4 #1/0, 4 #16 Contacts

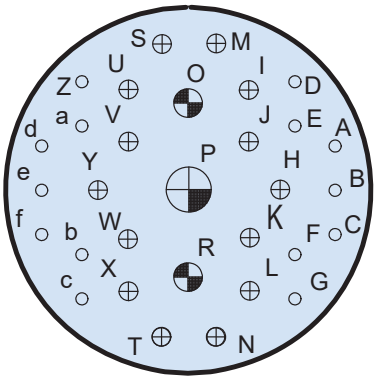

36-9
1 #4, 2 #8, 14 #12, 14 #16 Contacts

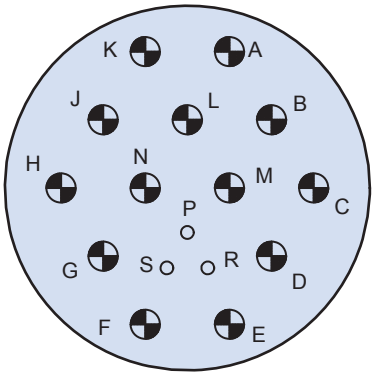

36-16
13 #8, 3 #16 Contacts

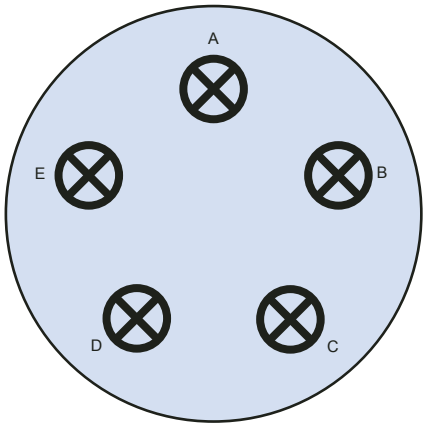

40-5
5 #1/0 Contacts

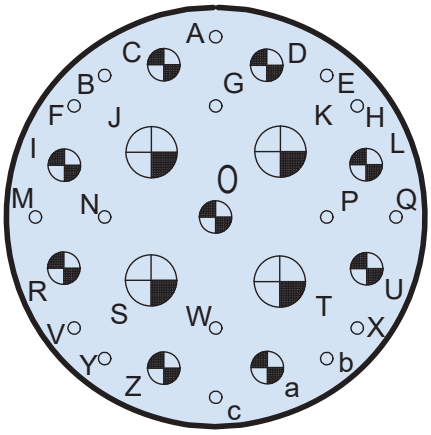

40-10
4 #4, 9 #8, 16 #16 Contacts

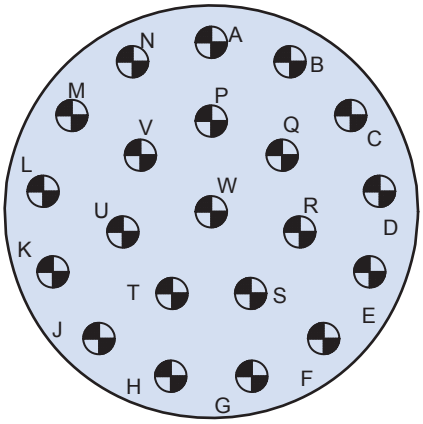

40-21
21 #8 Contacts

GENERAL INFORMATION

General Information and Technical Reference
Contact Design, Current Rating

GENERAL INFORMATION

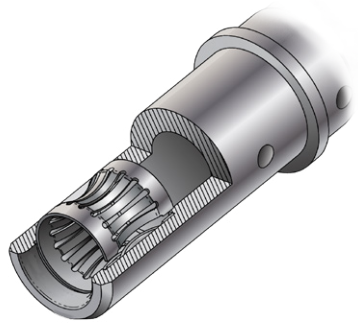

PowerTrip Socket Contact with LouverBand

PowerTrip Contacts

Series 970 socket contacts have a spring ("LouverBand"). Testing has demonstrated that LouverBand contacts have better mechanical and electrical performance compared to split-tine contacts. The spring provides multiple points of electrical contact, as opposed to a few "high spots" on a conventional four-finger contact. The LouverBand design offers low voltage drop for reduced temperature rise and higher current carrying capacity. The LouverBand spring has consistent, stable normal force, even when subjected to high mating cycles and temperature extremes.

"Last-Mate, First-Break" for Interlock Circuits

The Powertrip insert arrangements include layouts with size #12 and #16 contacts. These contacts are designed to mate only after the larger power contacts are mated. When connectors are uncoupled, the size #12 and #16 contacts separate before the power contacts are disengaged. These smaller contacts are typically used for safety interlock circuits.

Current Rating

Powertrip contact resistance (voltage drop) is up to 60% lower than AS39029 limits. Temperature rise tests have demonstrated the LouverBand contact to generate less heat under load than conventional AS39029 contacts.

The maximum safe current load is dependent on a number of application-specific variables. The maximum current load is the combination of the electrical load and ambient conditions that do not exceed a maximum connector internal hot-spot temperature of +200 °C, the maximum operating temperature of the PowerTrip connector.

LOUVERBAND CONTACT RESISTANCE

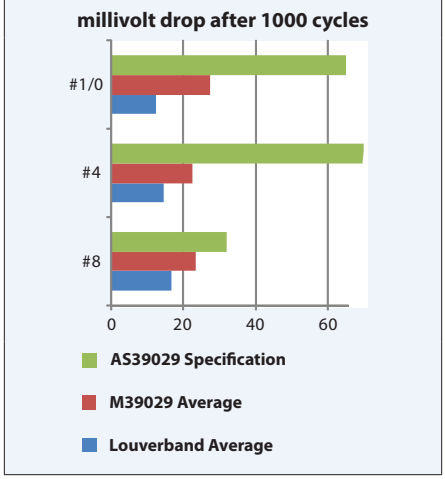

SIZE 1/0 CONTACT DE-RATING CURVE AND T-RISE

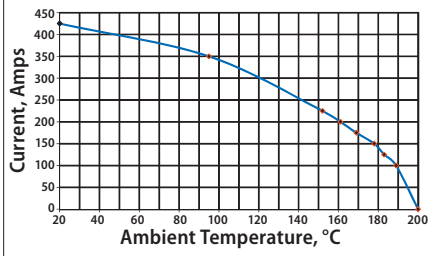

Current, A	T-Rise, °C	Current, A	T-Rise, °C
100	11	200	39
125	17	225	48
150	22	350	104
175	31	425	177

SIZE 8 CONTACT DE-RATING CURVE AND T-RISE

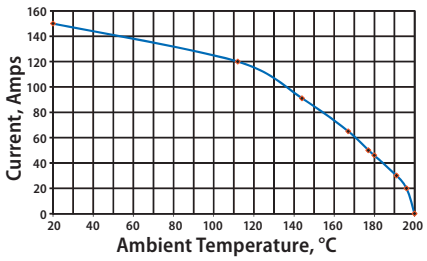

Current, A	T-Rise, °C	Current, A	T-Rise, °C
20	4	60	33
30	9	80	56
46	20	120	88
50	23	150	179

SIZE 2/0 CONTACT DE-RATING CURVE AND T-RISE

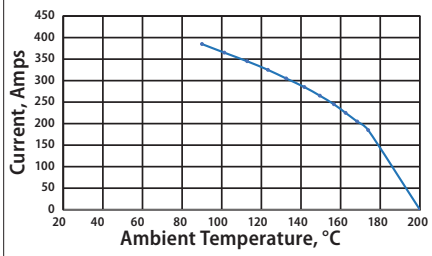

Current, A	T-Rise, °C	Current, A	T-Rise, °C
100	11	200	39
125	17	225	48
150	22	350	104
175	31	425	177

SIZE 4 CONTACT DE-RATING CURVE AND T-RISE

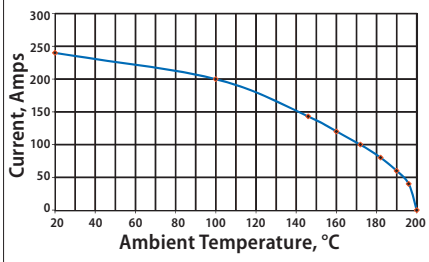

Current, A	T-Rise, °C	Current, A	T-Rise, °C
40	4	120	40
60	10	140	54
80	18	200	100
100	28	240	176

© 2024 Glenair, Inc • 1211 Air Way, Glendale, CA 91201 • 818-247-6000 • www.glenair.com • U.S. CAGE code 06324 • Series 970 PowerTrip Connectors
Dimensions in Inches (millimeters) are subject to change without notice.

General Information and Technical Reference
Materials and Finishes

MATERIALS AND FINISHES		
Component	**Material**	**Finish**
Contacts, Size #2/0, #1/0, #4 and #8	Pin contact and socket contact body: high-conductivity copper alloy per ASTM B301 Hermetic contact: ferrous alloy per ASTM B 829 Socket contact spring: beryllium copper	**Code 1**: Silver per ASTM-B700, 0.0002 – 0.0003 thick over nickel plate per QQ-N-290 class 2 .000050-.000100 thick **Code 2**: Gold per ASTM B488, Type II, Code C, Class 1.25, .000050-.000100 thick over nickel plate per QQ-N-290, Class 2, .000050-.000100 thick
Contacts, Size #12 and #16	Pin contact: copper alloy Socket contact: copper alloy, stainless steel hood	Gold per ASTM B488, Type II, Code C, 0.000015-0.000025 thick over palladium per ASTM B679, 0.000060-0.000100 thick, over nickel per SAE AMS-QQ-N-290 Class 2, 0.000050-0.000100 thick
Contacts, Hermetic, Size #12 and #16	Pin contact: ferrous alloy per ASTM B 829 Socket Contact: ferrous alloy pin, copper alloy socket, stainless steel hood	**Code 1**: Silver per ASTM-B700, 0.0002 – 0.0003 thick over nickel plate per QQ-N-290 class 2 .000050-.000100 thick **Code 2**: Gold per ASTM B488, Type II, Code C, Class 1.25, .000050-.000100 thick over nickel plate per QQ-N-290, Class 2, .000050-.000100 thick
Aluminum Shells, Coupling Nuts	Aluminum alloy 6061 or 7075	See Ordering Information
Stainless Steel Shells, Coupling Nuts, Hermetic Receptacle Shells	Stainless steel, AISI 316	See Ordering Information
Insulators	Fiberglass-reinforced thermosetting epoxy resin per ASTM-D-5948, black	None
Insulator, Hermetic	Vitreous glass	None
Interfacial Seals, Grommets	Fluorosilicone/silicone blend, blue	None
EMI Spring	Beryllium copper	Nickel-plated
Contact Retention Clip	Beryllium copper	None
Clinch Nut	Stainless Steel	Passivated
Anti-Decoupling Ratchet Spring	Stainless Steel	None
Filter Element	Multilayer ceramic planar array	

General Information and Technical Reference
Product Specification

DESCRIPTION	REQUIREMENT	PROCEDURE
Altitude Immersion	No evidence of moisture on connector interface or contacts. At the end of the third cycle, while still submersed, connectors shall meet 2000 Vac dielectric withstanding voltage and 1,000 megohms insulation resistance.	EIA-364-03 Simulated 75,000 feet altitude
Altitude- Low Temperature	Insulation resistance greater than 5,000 megohms while mated and exposed to simulated 110,000 feet altitude and -65°C.	EIA-364-105 Mated pair
Blowing Sand and Dust	Connectors shall meet electrical and mechanical requirements following exposure to sand and dust.	MIL-STD-810G Method 510.5 Mated connectors
Contact Insertion and Removal Force (Maintenance Aging)	Contact Size / Max. Pounds 16 / 20 12 / 30 8 / 35 4 / 40 1/0 / 40	EIA-364-24
Contact resistance (copper alloy)	Wire Size / Test Current / Voltage Drop 16 / 13 / 49 14 / 17 / 40 12 / 23 / 42 8 / 46 / 26 4 / 80 / 23 1/0 / 150 / 21	EIA-364-06 Test current in amperes. Maximum voltage drop in millivolts. Silver-coated copper wire, +25°C.
Contact resistance (ferrous alloy hermetic)	Wire Size / Test Current / Voltage Drop 16 / 10 / 539 14 / 13 / 440 12 / 17 / 462 8 / 33 / 286 4 / 60 / 253 1/0 / 100 / 231	EIA-364-06 Test current in amperes. Maximum voltage drop in millivolts. Silver-coated copper wire, +25°C.
Contact Retention	Contact Size / Min. Pounds 16 / 25 12 / 30 8 / 50 4 / 60 1/0 / 75	EIA-364-29 Method B
Salt Spray material/finish code ME	No exposure of base metal. Connectors shall meet DWV, contact resistance, shell-to-shell resistance and coupling torque	EIA-364-26 96 hours
Dynamic Salt Spray material/finish codes NF, ZR, MT, Z1	No exposure of base metal. Connectors shall meet DWV, contact resistance, shell-to-shell resistance and coupling torque	MIL-DTL-38999 Para. 4.5.13.2 50 cycles of mating and unmating prior to test 452 hours mated 48 hours unmated 450 cycles of mating and unmating following salt spray exposure
Coupling Torque	Shell Size / Maximum (in-lb.) 18 / 28 20 / 32 24 / 36 28 / 47 32 / 53 36 / 65 40 / 75	
Current Rating	Contact Size / Copper Alloy / Ferrous Alloy 16 / 13 / 10 12 / 23 / 17 8 / 60 / 33 4 / 100 / 60 1/0 / 175 / 125	EIA-364-70
Dielectric Withstanding Voltage at Sea Level (not applicable to filter connectors)	No breakdown or flashover at 2000 volts	EIA-364-20 AC rms 50-60 Hz 2mA max. leakage current

© 2024 Glenair, Inc • 1211 Air Way, Glendale, CA 91201 • 818-247-6000 • www.glenair.com • U.S. CAGE code 06324 • Series 970 PowerTrip Connectors
Dimensions in Inches (millimeters) are subject to change without notice.

DESCRIPTION	REQUIREMENT	PROCEDURE
Dielectric Withstanding Voltage at Sea Level, filter connectors	No breakdown or flashover at 1250 volts	EIA-364-20 Volts DC 2mA max. leakage current
EMI Shielding Effectiveness	Frequency MHz / Min. Atten. dB 100 / 90 200 / 88 300 / 88 400 / 87 800 / 85 1000 / 85 1500 / 76 2000 / 70 3000 / 69 4000 / 68 6000 / 66 10000 / 65	EIA-364-66 1,000 MHz to 10,000 MHz. MIL-DTL-38999L Para. 4.5.28.1 100 MHz to 1,000 MHz Prior to EMI test, connectors shall be mated a minimum of 500 cycles.
External Bend Moment	No evidence of damage. SHELL SIZE / Bend Moment (in-lb.) 18 / 420 20 / 450 24 / 570 28 / 630 32 / 750 36 / 810 40 / 870	SAE AS50151 Para. 4.6.20
Fluid Immersion	No visual evidence of degradation from immersion in various fuels and oils. Following immersion connectors shall meet coupling torque and dielectric withstanding voltage at sea level.	EIA-364-10
Fungus Resistance	Connector materials shall be fungus inert	MIL-STD-810G Method 508.6
High-Impact Shock	No discontinuity, no cracking, breaking or loosening of parts.Connectors shall meet electrical requirements after shock test.	MIL-DTL-38999L Para. 4.5.23.2 MIL-S-901, grade A
Humidity, 21 Day (Damp heat, Long Term)	No deterioration which will adversely affect the connector. Following the drying period, connectors shall meet 100 megohms minimum, contact resistance, shell-to-shell resistance, DWV, mating and unmating requirements.	EIA-364-31 Condition C Method II 90-95% RH 40° C Apply 100 volts DC during test. 4 hours drying time at ambient temperature prior to final measurements.
Humidity, Cyclic (Damp Heat, Cyclic) (Moisture Resistance)	No deterioration which will adversely affect the connector. 100 megohms minimum insulation resistance during the final cycle. Following the recovery period, connectors shall meet contact resistance, shell-to-shell resistance and DWV requirements.	EIA-364-31 Condition B Method III 80-98% RH 10 cycles (10 days) +25° C to +65° C Step 7b vibration deleted. 24 hour recovery period.
Impact, Cable Connectors	No impairment of function. Connector shall meet contact resistance, insulation resistance and waterproof sealing.	EIA-364-42 1 meter 8 drops
Ingress Protection	IP67 rating	IEC-60529
Insert Retention	SHELL SIZE / FORCE (lbs.) 18 / 50 20 / 75 24 / 85 28 / 105 32 / 115 36 / 135 40 / 165	EIA-364-35 Unmated connectors 100 ± 5 pounds per square inch

General Information and Technical Reference
Product Specification

GENERAL INFORMATION

DESCRIPTION	REQUIREMENT	PROCEDURE
Insulation Resistance at Ambient Temperature	5,000 megohms minimum	EIA-364-21 500 volts DC ± 50 volts.
Insulation Resistance at Elevated Temperature	1,000 megohms minimum following 30 minutes at +200°C	EIA-364-21 500 volts DC ± 50 volts.
Low Level Contact Resistance	Wire Size / Max. Milliohms 16 / 5 20 / 9	EIA-364-23 100 milliamperes maximum and 20 millivolts maximum open circuit voltage
Magnetic Permeability	2 µ maximum.	EIA-364-54
Mechanical Durability, at Ambient Temperature	No deterioration which will adversely affect the connector after 500 cycles of mating and unmating. Connectors shall meet contact resistance, insulation resistance, shell-to-shell resistance, DWV, and coupling torque.	EIA-364-09
Mechanical Shock	No discontinuity of greater than 1 microsecond, no cracking, breaking or loosening of parts, plug shall not become disengaged from receptacle. Connectors shall meet electrical requirements after shock test.	EIA-364-27 Condition D 3 shocks X 3 axes X 2 directions = 18 shocks 2941 m/s^2 (300 g's), 3 ms, half-sine
Operating Temperature	-65°C to +200°C Filter Connectors -55°C to +125°C	
Outgassing	Connectors, when specially processed for outgassing control, shall not exceed 1.0% Total Mass Loss (TML) and 0.1% Collected Volatile Condensable Material (CVCM)	ASTM E 595
Ozone Exposure	No evidence of degradation due to ozone exposure that will adversely affect performance	EIA-364-14 Wired, mated connectors
Resistance to Indirect Lightening Strike	No damage or degradation to material or finish that would affect subsequent use, no damage or hardening of elastomeric materials that adversely affects sealing effectiveness. Connector must meet coupling torque, DWV and IR and shell-to-shell conductivity.Applicable to connectors with conductive plating finishes.	EIA/ECA-364-75 Table XII, group 14 10,000 Amps peak current Test details per MIL-DTL-38999 Para. 4.5.47
Shell-To-Shell Conductivity	Finish Code ME 1 millivolt drop maximum Finish Code NF, MT 2.5 millivolt drop maximum Finish Code ZR 10 millivolt drop maximum Finish Code Z1 50 millivolt drop maximum	EIA-364-83 Unwired connectors
Socket Contact Engagement and Separation Force	Contact engagement and separation forces shall meet the requirements of SAE AS39029 Table 9	SAE AS39029
Thermal Shock	No mechanical damage or loosening of parts. Following thermal shock, connector shall meet contact resistance, DWV, insulation resistance and shell-to-shell resistance requirements.	EIA-364-32 Test Condition VI 5 cycles consisting of -65° C 30 minutes, +25° C 5 minutes max., +200° C 30 minutes, +25° C 5 minutes max.
Vibration, Random, at Ambient Temperature	No discontinuity of greater than 1 microseconds, no cracking, breaking or loosening of parts, plug shall not become disengaged from receptacle. Connectors shall meet electrical requirements after vibration test.	MIL-DTL-38999 Para. 4.5.23.2.4
Vibration, Random, at Elevated Temperature	No discontinuity of greater than 1 microseconds, no cracking, breaking or loosening of parts, plug shall not become disengaged from receptacle. Connectors shall meet electrical requirements after vibration test.	EIA-364-28 Test Condition VI Letter "J" 50- 2,000 Hz 43.92 g rms 200° C
Vibration, Sine	No discontinuity of greater than 1 microseconds, no cracking, breaking or loosening of parts, plug shall not become disengaged from receptacle. Connectors shall meet electrical requirements after vibration test.	MIL-DTL-38999L Para. 4.5.23.2.1
Water Immersion	No evidence of water penetration into mated connectors.	MIL-STD-810F Method 512.4,1 meter immersion for 1 hour
Water Pressure	No evidence of water penetration into mated connectors or backshell interface. ≥ 100 MΩ insulation resistance.	MIL-DTL- 28840 Paragraph 4.1.15. 6 feet immersion in tap water, 48 hours
Outgassing	Special Bakeout Required 1.0% Total Mass Loss (TML) 0.1% Collected Volatile Condensable Material (CVCM)	ASTM E595

© 2024 Glenair, Inc • 1211 Air Way, Glendale, CA 91201 • 818-247-6000 • www.glenair.com • U.S. CAGE code 06324 • Series 970 PowerTrip Connectors
Dimensions in Inches (millimeters) are subject to change without notice.

General Information and Technical Reference
PowerTrip Shell Material and Finish Options

POWERTRIP STANDARD SHELL MATERIAL / FINISHES						
	Aluminum Shell					Stainless Steel Shell
Property	Nickel	Nickel-PTFE	Tin-Zinc	Olive Drab Cadmium	Black Zinc-Nickel	Passivate
Glenair Code	ME	MT	TZ	NF	ZR	Z1
Corrosion Resistance	Fair	Excellent	Excellent	Excellent	Excellent	Excellent
Temperature Range	-65° to +200°C	-65 to +175 °C	-65 to +175 °C	-65 to +175 °C	-65 to +175 °C	-65 to +200 °C
Salt Spray Hours	96	500	500	500	500	500
Conductivity	Excellent	Excellent	Excellent	Good	Good	Fair
Relative Cost	$$	$$$	$$$	$$	$$$	$$$$
RoHS Compliant[1]	Yes	Yes	Yes	No	Yes	Yes

[1] Does not contain cadmium or hexavalent chromium. Meets EU requirements.

The following table contains additional material / finish codes. If one of these alternate finishes is preferred over the above standard finishes, substitute the appropriate code in the part number.

OPTIONAL SHELL MATERIAL AND FINISH CODES							
Code	Material	Finish	Finish Specification	Hrs. Salt Spray	Electrical Conductivity	Operating Temp. Range	RoHS Compliance[1]
AB	Marine Bronze	Unplated	AMS4640 alloy	1000	Conductive	-65° to +200°C	✓
C	Aluminum	Anodize, Black	MIL-PRF-8625	48	Non-Conductive	-65 to +175 °C	✓
E	Aluminum	Chem Film, Gold	MIL-DTL-5541	168	Conductive	-65 to +125 °C	
G	Aluminum	Hard Anodize, Natural	MIL-PRF-8625	500	Non-Conductive	-65° to +200°C	✓
JF	Aluminum	Cadmium, Yellow-Gold	AMS-QQ-P-416	500	Conductive	-65 to +175 °C	
Z1	Stainless Steel	Passivate	AMS2700	500	Conductive	-65° to +200°C	✓
Z2	Aluminum	Gold	MIL-DTL-45204	48	Conductive	-65° to +200°C	✓
ZL	Stainless Steel	Electrodeposited Nickel	AMS-QQ-N-290	500	Conductive	-65° to +200°C	✓
ZM	Stainless Steel	Electroless Nickel	AMS-C-26074	500	Conductive	-65° to +200°C	✓
ZMT	Stainless Steel	Nickel-PTFE	AMS2454	1000	Conductive	-65° to +200°C	✓
ZN	Aluminum	Zinc-Nickel, Olive Drab	ASTM B841	500	Conductive	-65 to +175 °C	✓
ZU	Stainless Steel	Cadmium, Black	AMS-QQ-P-416	500	Conductive	-65 to +175 °C	
ZW	Stainless Steel	Cadmium, Olive Drab	AMS-QQ-P-416	500	Conductive	-65 to +175 °C	
ZZR	Stainless Steel	Zinc-Nickel, Black	ASTM B841	500	Conductive	-65 to +175 °C	✓

[1] Does not contain cadmium or hexavalent chromium. Meets EU requirements.

TIN-ZINC PLATING

The United States Department of Defense (DOD) has mandated the elimination of cadmium from DOD weapons systems because of toxicity concerns. The European Union has also restricted the use of cadmium on electronics equipment (RoHS). Tin-Zinc is a RoHS cadmium-free sacrificial finish that offers high conductivity and shielding performance, corrosion resistance, solderability, and proven compatibility with legacy cadmium and zinc-nickel finishes. Tin-Zinc is DLA-qualified and RoHS compliant.

General Information and Technical Reference
PowerTrip® Connectors for Space Flight

Series 970 PowerTrip® connectors are suitable for space flight. The connector should undergo a thermal vacuum bakeout in order to meet outgassing limits, as required by NASA and MIL-DTL-38999 Class G. Add a suffix code to the connector part number to specify the bakeout operation. Special NASA screening is also available via suffix code.

OUTGASSING

Space flight equipment requires low-outgassing components in order to prevent degradation to optics and other sensitive instruments. The space industry has adopted a standardized test procedure, ASTM E595, to evaulate outgassing properties. In the ASTM test, material samples are heated to 125 °C at a vacuum of 5 X 10^{-5} torr for 24 hours. The test sample is then weighed to calculate the Total Mass Loss (TML), which may not exceed 1.0% of the total initial mass. A collector plate is used to determine the Collected Volatile Condensable Material (CVCM), which may not exceed 0.1% of the total original specimen mass.

Powertrip® connectors contain nonmetallic materials including rubber, plastic, adhesives and potting compounds which can give off gasses when subjected to a vacuum or high heat. Unless the connector is specially processed, the TML and CVCM can exceed allowable limits. Glenair is able to offer two bakeout processes which assure ASTM E595 compliance:

Standard Bakeout (24 hour/ +125 °C per NASA EEE-INST-002)

"Class G" Bakeout (48 hour/ +175 °C).

The higher temperature Class G bakeout is recommended for maximum removal of volatiles and is standard for Glenair MIL-DTL-38999 Class G space grade connectors.

VACUUM BAKEOUT MODIFICATION CODES

Requirement	Modification Code	Vacuum Bakeout Duration	Vacuum Bakeout Temp.
Standard Bakeout *NASA EEE-INST-002*	-186M	24 Hours	+125 °C
Class G Bakeout *Maximum Removal of Volatiles*	-186T	48 Hours	+175 °C

NASA SCREENING

NASA recommends special screening for space grade connectors. NASA EEE-INST-002 *Instructions for EEE Parts Selection, Screening, Qualification, and Derating* contains three levels of screening: level 1 for highest reliabity, level 2 for high reliability and level 3 for standard reliability. Glenair suffix codes are available to invoke NASA screening.

MODIFICATION CODES FOR VACUUM BAKEOUT PLUS NASA SCREENING

Screening Level *NASA EEE-INST-002 Table 2A*	Modification Code	Vacuum Bakeout Duration	Vacuum Bakeout Temp.
Level 1 *Highest Reliability*	-429C	24 Hours	+125 °C
Level 2 *High Reliability*	-429A	24 Hours	+125 °C
Level 3 *Standard Reliability*	-429L	24 Hours	+125 °C

MODIFICATION CODES FOR NASA SCREENING ONLY (NO BAKEOUT)

Screening Level *NASA EEE-INST-002 Table 2C*	Modification Code
Level 1 *Highest Reliability*	-429B
Level 2 *High Reliability*	-429
Level 3 *Standard Reliability*	(Mod Code not required)

PROHIBITED MATERIALS

Some types of metal finishes are prohibited for space flight. "Cadmium, zinc, chemically coated cadmium or zinc, or silver shall not be used as a connector or contact finish" (NASA EEE-INST-002 Instructions for EEE Parts Selection, Screening, Qualification, and Derating). NASA recommends electroless nickel or gold plating on connector shells and gold plating for contacts.

© 2024 Glenair, Inc • 1211 Air Way, Glendale, CA 91201 • 818-247-6000 • www.glenair.com • U.S. CAGE code 06324 • Series 970 PowerTrip Connectors
Dimensions in Inches (millimeters) are subject to change without notice.

Cable Connectors

970-001 Plug with Accessory Thread

970-001 plug has accessory thread for attaching strain relief clamps, backshells or adapters. Coupling threads are triple-start ACME quick-disconnect. EMI protected with ground spring. Self-locking coupling nut resists loosening under vibration. Aluminum or stainless steel plug has five polarizing keys. Crimp rear-release contacts are packaged with connector. PowerTrip connectors feature low resistance LouverBand contacts and are sealed to withstand extreme environments.

- Quick-disconnect self-locking aerospace-grade power connector
- 2000 VAC (DWV)
- -65° to +200°C
- EMI ground spring
- Crimp, rear-release contacts
- High shock, high vibration

INSERT ARRANGEMENTS

Insert Arr.	Contact Size and Quantity					
	#16	#12	#8	#4	#1/0	#2/0
18-2			2			
18-4		2	2			
20-3			3			
20-4			4			
20-5		2	3			
20-7	4		3			
24-1					1	
24-2				2		
24-3				3		
24-5			5			
24-6		4		2		
24-A1						1
24-A6		3		3		
28-12	6		6			
28-15	15					
28-4				4		
28-8		1	7			
28-9	5			4		
32-12	2		10			
32-2					2	
32-20	1	19				
32-3					3	
32-4				2	2	
32-5				5		
32-6		3			3	
32-7				7		
32-A22		22				
36-16	3		13			
36-2						2
36-4					4	
36-9	14	14	2	1		
36-A8				8		
36-B8	4				4	
40-10	16		9	4		
40-21			21			
40-5					5	

HOW TO ORDER

Sample Part Number →	970-001	MT	18-2	P2	-1

Basic Part Number	**970-001** Plug with Accessory Thread
Material/Finish	**ME** = Aluminum / Electroless Nickel **MT** = Aluminum / Nickel PTFE **NF** = Aluminum / Olive Drab Cadmium **TZ** = Aluminum / Tin-Zinc **ZR** = Aluminum / Black Zinc-Nickel **Z1** = Stainless Steel / Passivated
Shell Size-Insert Arr.	See "Insert Arrangements" Table
Contact Gender and Plating	**A** = Pin Connector, without Contacts **B** = Socket Connector, without Contacts **P1** = Pin Contacts, Silver Plating* **P2** = Pin Contacts, Gold Plating **S1** = Socket Contacts, Silver Plating* **S2** = Socket Contacts, Gold Plating * Size 12 and 16 contacts are gold-plated. Size 8, 4, 1/0 and 2/0 are silver plated.
Key Position	**-1**, **-2**, **-3**, **-4**, **-5**, or **-6**

RATINGS

Voltage (DWV): 2000 Volts AC
Current: Size 16 contact 13 amps
Size 12 contact 23 amps
Size 8 contact 60 amps
Size 4 contact 100 amps
Size 1/0 contact 175 amps
Size 2/0 contact 205 amps
Operating temperature:
Matl/Finish Codes ME, Z1: -65° to +200°C
Codes MT,NF, TZ, ZR: -65 to +175 °C
Durability: 500 mating cycles
EMI shielding effectiveness: 65 dB min. 100 MHz to 10 GHz
Shock: 50 g
Vibration: per MIL-DTL-38999 Series III
MIL-S-901 high impact shock: Grade A
Blowing sand and dust: MIL-STD-810, method 510.5
Altitude immersion: 75,000 feet
Ingress protection: IP67
Water pressure: 6 feet, 48 hours

CONSTRUCTION

Contacts: size #8 and larger: high conductivity copper alloy, gold or silver plated. Size #12, #16: copper alloy, gold plated
Shell: Aluminum or stainless steel, see How to Order
Coupling nut: Aluminum or stainless steel, see How to Order. Anti-decoupling spring: SST, passivated
Insulator: Glass-filled thermoset epoxy
Wire grommet, face seal, peripheral seal: Fluorosilicone/silicone blend
Contact Retention clip: Beryllium copper
Ground spring: Beryllium copper, nickel plated
Insert retainer ring: High-temperature thermoplastic
Coupling nut retainer ring: Beryllium copper, nickel plated

Cable Connectors
970-001 Plug with Accessory Thread

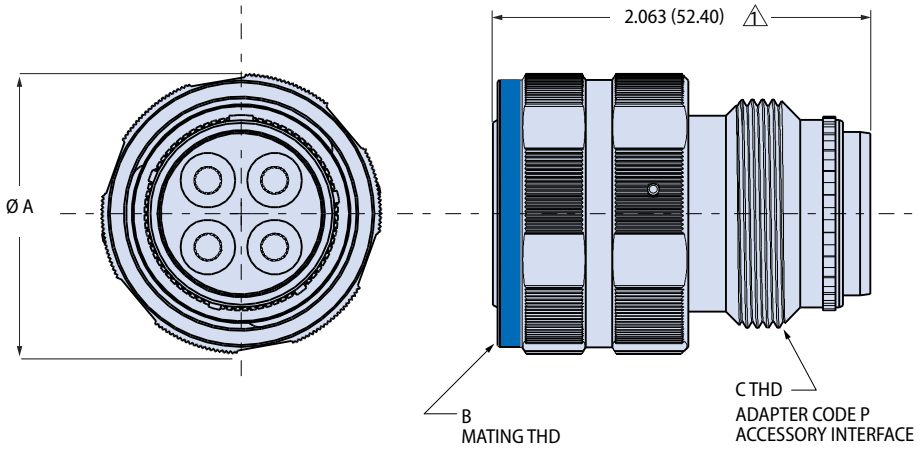

1 2.223 (56.46) MAX FOR INSERT ARRANGEMENTS WITH #2/0 CONTACTS

DIMENSIONS

Shell Size	ø A In.	ø A mm.	B Mating Thread	C Accessory Thread
18	1.485	37.72	1.125-0.1P-.3L-TS-2B	1.125-18 UNEF-2A
20	1.583	40.21	1.250-0.1P-.3L-TS-2B	1.250-18 UNEF-2A
24	1.857	47.17	1.500-0.1P-.3L-TS-2B	1.4375-18 UNEF-2A
28	2.186	55.52	1.750-0.1P-.3L-TS-2B	1.8125-16 UN-2A
32	2.420	61.47	2.000-0.1P-.3L-TS-2B	2.0625-16 UNS-2A
36	2.709	68.81	2.250-0.1P-.3L-TS-2B	2.250-16 UN-2A
40	2.980	75.69	2.500-0.1P-.3L-TS-2B	2.500-16 UN-2A

KEY POSITIONS

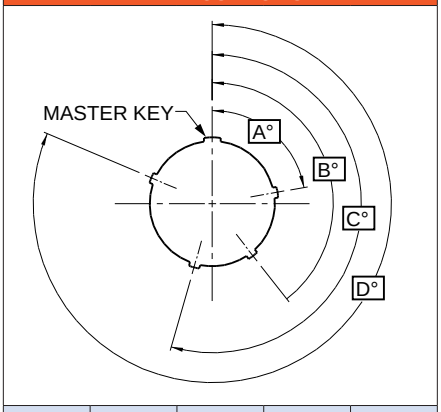

Position	A°	B°	C°	D°
1	80	142	196	293
2	135	170	200	310
3	49	169	200	244
4	66	140	200	257
5	62	145	180	280
6	79	153	197	272

© 2024 Glenair, Inc • 1211 Air Way, Glendale, CA 91201 • 818-247-6000 • www.glenair.com • U.S. CAGE code 06324 • Series 970 PowerTrip Connectors
Dimensions in Inches (millimeters) are subject to change without notice.

POWER TRIP®

Cable Connectors
970-011 Plug with Banding Platform

970-011 plug has integral banding platform and groove for shrink boot. Terminate cable shield directly to connector with Band-Master ATS banding strap, sold separately. Coupling threads are triple-start ACME quick-disconnect. EMI protected with ground spring. Self-locking coupling nut resists loosening under vibration. Crimp rear-release contacts are packaged with connector. PowerTrip connectors feature low resistance LouverBand contacts and are designed to withstand extreme environments.

- **Quick-disconnect, high shock, high vibration, self-locking connector**
- **2000 VAC (DWV)**
- **-65° to +200 °C**
- **Plug has EMI ground spring**
- **Crimp, rear-release contacts**
- **Advanced IP68+ sealing**

INSERT ARRANGEMENTS

Insert Arr.	Contact Size and Quantity					
	#16	#12	#8	#4	#1/0	#2/0
18-2			2			
18-4		2	2			
20-3			3			
20-4			4			
20-5		2	3			
20-7	4		3			
24-1					1	
24-2				2		
24-3				3		
24-5			5			
24-6		4		2		
24-A1						1
24-A6		3		3		
28-12	6		6			
28-15	15					
28-4				4		
28-8		1	7			
28-9	5			4		
32-12	2		10			
32-2					2	
32-20	1	19				
32-3					3	
32-4				2	2	
32-5				5		
32-6		3			3	
32-7				7		
32-A22		22				
36-16	3		13			
36-2						2
36-4					4	
36-9	14	14	2	1		
36-A8				8		
36-B8	4				4	
40-10	16		9	4		
40-21			21			
40-5					5	

HOW TO ORDER

Sample Part Number →	970-011	MT	18-2	P2	-1

Basic Part Number	**970-011** = Cable Plug with Banding Platform
Material/Finish	**ME** = Aluminum / Electroless Nickel **MT** = Aluminum / Nickel PTFE **NF** = Aluminum / Olive Drab Cadmium **TZ** = Aluminum / Tin-Zinc **ZR** = Aluminum / Black Zinc-Nickel **Z1** = Stainless Steel / Passivated
Shell Size-Insert Arr.	See "Insert Arrangements" Table
Contact Gender and Plating	**A** = Pin Connector, without Contacts **B** = Socket Connector, without Contacts **P1** = Pin Contacts, Silver Plating* **P2** = Pin Contacts, Gold Plating **S1** = Socket Contacts, Silver Plating* **S2** = Socket Contacts, Gold Plating * Size 12 and 16 contacts are gold-plated. Size 8, 4, 1/0 and 2/0 are silver plated.
Key Position	**-1**, **-2**, **-3**, **-4**, **-5**, or **-6**

RATINGS

Voltage (DWV): 2000 Volts AC
Current: Size 16 contact 13 amps
Size 12 contact 23 amps
Size 8 contact 60 amps
Size 4 contact 100 amps
Size 1/0 contact 175 amps
Size 2/0 contact 205 amps
Operating temperature:
Matl/Finish Codes ME, Z1: -65° to +200°C
Codes MT,NF, TZ, ZR: -65 to +175 °C
Durability: 500 mating cycles
EMI shielding effectiveness: 65 dB min. 100 MHz to 10 GHz
Shock: 50 g
Vibration: per MIL-DTL-38999 Series III
MIL-S-901 high impact shock: Grade A
Blowing sand and dust: MIL-STD-810, method 510.5
Altitude immersion: 75,000 feet
Ingress protection: IP67
Water pressure: 6 feet, 48 hours

CONSTRUCTION

Contacts: size #8 and larger: high conductivity copper alloy, gold or silver plated. Size #12, #16: copper alloy, gold plated
Shell: Aluminum or stainless steel, see How to Order
Coupling nut: Aluminum or stainless steel, see How to Order. Anti-decoupling spring: SST, passivated
Insulator: Glass-filled thermoset epoxy
Wire grommet, face seal, peripheral seal: Fluorosilicone/silicone blend
Contact Retention clip: Beryllium copper
Ground spring: Beryllium copper, nickel plated
Insert retainer ring: High-temperature thermoplastic
Coupling nut retainer ring: Beryllium copper, nickel plated

Cable Connectors
970-011 Plug with Banding Platform

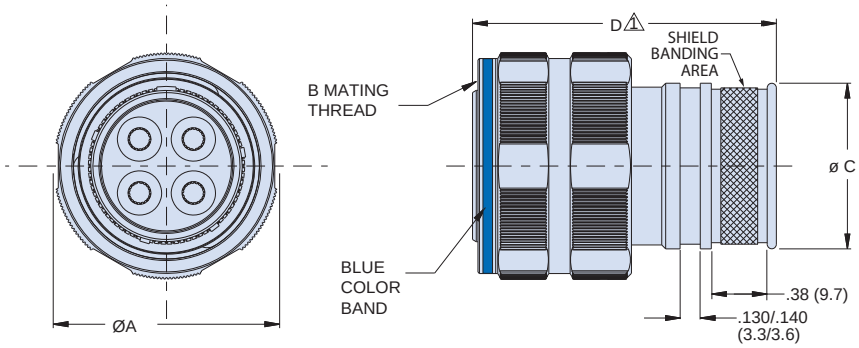

1 D DIM. OAL IS 2.223 (56.46) FOR INSERT ARRANGEMENTS WITH #2/0 CONTACTS. GROMMET PROTRUDES BEYOND SHELL.

DIMENSIONS

Shell Size	ø A In.	ø A mm	B Mating Thread	ø C		D In.	D mm.
18	1.485	37.72	1.125-0.1P-0.3L-TS-2B	1.037	26.34	2.063	52.4
20	1.583	40.21	1.250-0.1P-0.3L-TS-2B	1.163	29.54	2.063	52.4
24	1.857	47.17	1.500-0.1P-0.3L-TS-2B	1.350	34.29	2.063	52.4
28	2.186	55.52	1.750-0.1P-0.3L-TS-2B	1.670	42.42	2.063	52.4
32	2.420	61.47	2.000-0.1P-0.3L-TS-2B	1.945	49.40	2.063	52.4
36	2.709	68.81	2.250-0.1P-0.3L-TS-2B	2.176	55.27	2.063	52.4
40	2.980	75.69	2.500-0.1P-0.3L-TS-2B	2.350	59.69	2.063	52.4

KEY POSITIONS

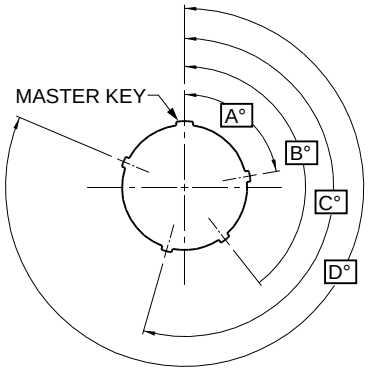

Position	A°	B°	C°	D°
1	80	142	196	293
2	135	170	200	310
3	49	169	200	244
4	66	140	200	257
5	62	145	180	280
6	79	153	197	272

SHRINK BOOT

Connector has boot groove for lipped shrink boot. Boot is ordered separately. Boot provides cable strain relief and environmental protection. Type 1 high-performance semi-rigid elastomer resists fuels and oils and withstands temperature extremes. Available with W1 hot melt adhesive pre-coat. Operating temperature range -75 to +150 °C (no adhesive), -55 to +125 °C (with W1 adhesive).

Shell Size	Shrink Boot P/N	Adhesive Lined Shrink Boot P/N
18	770-001S106	770-001S106W1
20	770-001S106	770-001S106W1
24	770-001S107	770-001S107W1
28	770-001S108	770-001S108W1
32	770-001S108	770-001S108W1
36	770-001S109	770-001S109W1
40	770-001S109	770-001S109W1

SHIELD BAND

Shield band is not included with connector. Order separately.

Use banding strap to terminate cable braid directly to connector. Stainless steel band strap provides fast, cost-effective and highly reliable termination of braided metallic shielding. The Band-Master ATS® Advanced Cable Shield Termination System is the overwhelming favorite throughout the military aerospace and defense industries, providing excellent static loading and corrosion resistance in electrical wire interconnect systems.

Band Strap

Banding Tool
601-100

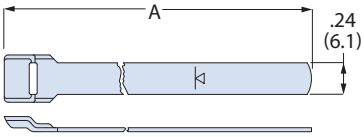

A Length in	A Length mm	Fits up to Dia. in	Fits up to Dia. mm	Band Strap (pre-coiled) Part Number
14	355	1.80	45.7	601-041
18	457	2.50	63.5	601-050

© 2024 Glenair, Inc • 1211 Air Way, Glendale, CA 91201 • 818-247-6000 • www.glenair.com • U.S. CAGE code 06324 • Series 970 PowerTrip Connectors
Dimensions in Inches (millimeters) are subject to change without notice.

POWER TRIP®

Cable Connectors

970-005 Receptacle with Accessory Thread

970-005 cable-mount receptacle has accessory thread for attaching strain relief clamps, backshells or adapters. Coupling threads are triple-start ACME quick-disconnect. EMI protected with ground spring on plug. Aluminum or stainless steel shell has five polarizing keyways. Crimp rear-release contacts are packaged with connector. PowerTrip connectors feature low resistance LouverBand contacts and are designed to withstand extreme environments.

- **Quick-disconnect, high shock, high vibration, self-locking connector**
- **2000 VAC (DWV)**
- **-65° to +200 °C**
- **Plug has EMI ground spring**
- **Crimp, rear-release contacts**
- **Advanced IP68+ sealing**

INSERT ARRANGEMENTS

Insert Arr.	Contact Size and Quantity					
	#16	#12	#8	#4	#1/0	#2/0
18-2			2			
18-4		2	2			
20-3			3			
20-4			4			
20-5		2	3			
20-7	4		3			
24-1					1	
24-2				2		
24-3				3		
24-5			5			
24-6		4		2		
24-A1						1
24-A6		3		3		
28-12	6		6			
28-15	15					
28-4				4		
28-8		1	7			
28-9	5			4		
32-12	2		10			
32-2					2	
32-20	1	19				
32-3					3	
32-4				2	2	
32-5				5		
32-6		3			3	
32-7				7		
32-A22		22				
36-16	3		13			
36-2						2
36-4					4	
36-9	14	14	2	1		
36-A8				8		
36-B8	4				4	
40-10	16		9	4		
40-21			21			
40-5					5	

HOW TO ORDER

Sample Part Number ➜	970-005	ME	40-5	S1	-1

Basic Part Number	**970-005** Cable Receptacle with Accessory Thread
Material/Finish	**ME** = Aluminum / Electroless Nickel **MT** = Aluminum / Nickel PTFE **NF** = Aluminum / Olive Drab Cadmium **TZ** = Aluminum / Tin-Zinc **ZR** = Aluminum / Black Zinc-Nickel **Z1** = Stainless Steel / Passivated
Shell Size-Insert Arr.	See "Insert Arrangements" Table
Contact Gender and Plating	**A** = Pin Connector, without Contacts **B** = Socket Connector, without Contacts **P1** = Pin Contacts, Silver Plating* **P2** = Pin Contacts, Gold Plating **S1** = Socket Contacts, Silver Plating* **S2** = Socket Contacts, Gold Plating * Size 12 and 16 contacts are gold-plated. Size 8, 4, 1/0 and 2/0 are silver plated.
Keyway Position	**-1**, **-2**, **-3**, **-4**, **-5**, or **-6**

RATINGS

Voltage (DWV): 2000 Volts AC
Current: Size 16 contact 13 amps
Size 12 contact 23 amps
Size 8 contact 60 amps
Size 4 contact 100 amps
Size 1/0 contact 175 amps
Size 2/0 contact 205 amps
Operating temperature:
Matl/Finish Codes ME, Z1: -65° to +200°C
Codes MT, NF, TZ, ZR: -65 to +175 °C
Durability: 500 mating cycles
EMI shielding effectiveness: 65 dB min. 100 MHz to 10 GHz
Shock: 50 g
Vibration: per MIL-DTL-38999 Series III
MIL-S-901 high impact shock: Grade A
Blowing sand and dust: MIL-STD-810, method 510.5
Altitude immersion: 75,000 feet
Ingress protection: IP67
Water pressure: 6 feet, 48 hours

CONSTRUCTION

Contacts: size #8 and larger: high conductivity copper alloy, gold or silver plated.
Size #12, #16: copper alloy, gold plated
Shell: Aluminum or stainless steel, see How to Order
Insulator: Glass-filled thermoset epoxy
Wire grommet, face seal: Fluorosilicone/silicone blend
Contact Retention clip: Beryllium copper
Insert retainer ring: High-temperature thermoplastic

Cable Connectors

970-005 Receptacle with Accessory Thread

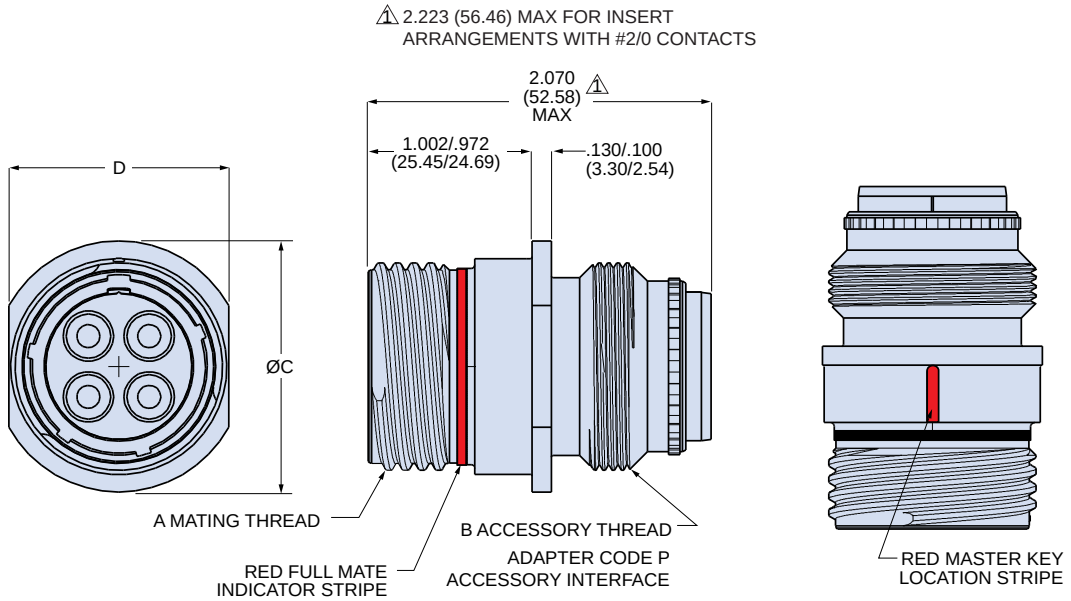

DIMENSIONS

Shell Size	A Mating Thread	B Accessory Thd	C In. ±.010	C mm. ±0.25	D In. ±.005	D mm. ±0.13
18	1.125-.1P-.3L-TS-2A	1.125-18 UNEF-2A	1.328	33.73	1.138	28.91
20	1.250-.1P-.3L-TS-2A	1.250-18 UNEF-2A	1.515	38.48	1.325	33.66
24	1.500-.1P-.3L-TS-2A	1.4375-18 UNEF-2A	1.703	43.26	1.513	38.43
28	1.750-.1P-.3L-TS-2A	1.8125-16 UN-2A	2.078	52.02	1.888	47.96
32	2.000-.1P-.3L-TS-2A	2.0625-16 UNS-2A	2.265	57.53	2.075	52.71
36	2.250-.1P-.3L-TS-2A	2.250-16 UN-2A	2.515	63.89	2.325	55.06
40	2.500-.1P-.3L-TS-2A	2.500-16 UN-2A	2.765	70.23	2.575	65.41

KEY POSITIONS

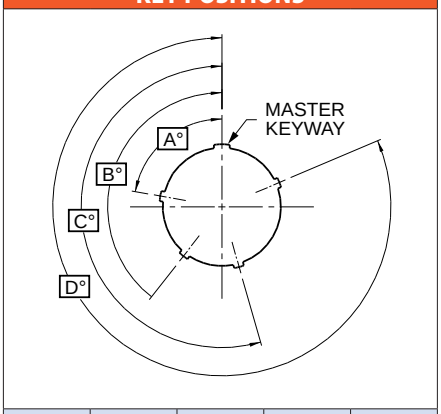

Position	A°	B°	C°	D°
1	80	142	196	293
2	135	170	200	310
3	49	169	200	244
4	66	140	200	257
5	62	145	180	280
6	79	153	197	272

© 2024 Glenair, Inc • 1211 Air Way, Glendale, CA 91201 • 818-247-6000 • www.glenair.com • U.S. CAGE code 06324 • Series 970 PowerTrip Connectors
Dimensions in Inches (millimeters) are subject to change without notice.

POWER TRIP®

Cable Connectors

970-033 Receptacle with Banding Platform

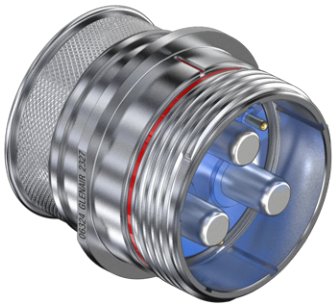

970-033 cable mount receptacle has integral banding platform. Terminate cable shield directly to connector with Band-Master ATS® banding strap, sold separately. Coupling threads are triple-start ACME quick-disconnect. EMI protected with ground spring on mating plug. Aluminum or stainless steel shell has five polarizing keyways. Crimp rear-release contacts are packaged with connector. PowerTrip connectors feature low resistance LouverBand contacts and are designed to withstand extreme environments.

- **Quick-disconnect, high shock, high vibration, self-locking connector**
- **2000 VAC (DWV)**
- **-65° to +200 °C**
- **Plug has EMI ground spring**
- **Crimp, rear-release contacts**
- **Advanced IP68+ sealing**

INSERT ARRANGEMENTS

Insert Arr.	Contact Size and Quantity					
	#16	#12	#8	#4	#1/0	#2/0
18-2			2			
18-4		2	2			
20-3			3			
20-4			4			
20-5		2	3			
20-7	4		3			
24-1					1	
24-2				2		
24-3				3		
24-5			5			
24-6		4		2		
24-A1						1
24-A6		3		3		
28-12	6		6			
28-15	15					
28-4				4		
28-8		1	7			
28-9	5			4		
32-12	2		10			
32-2					2	
32-20	1	19				
32-3					3	
32-4				2	2	
32-5				5		
32-6		3			3	
32-7				7		
32-A22		22				
36-16	3		13			
36-2						2
36-4					4	
36-9	14	14	2	1		
36-A8				8		
36-B8	4				4	
40-10	16		9	4		
40-21			21			
40-5					5	

HOW TO ORDER

Sample Part Number → 970-033 | MT | 18-2 | P2 | -1

Basic Part Number	**970-033** Cable Receptacle with Banding Platform
Material/Finish	**ME** = Aluminum / Electroless Nickel **MT** = Aluminum / Nickel PTFE **NF** = Aluminum / Olive Drab Cadmium **TZ** = Aluminum / Tin-Zinc **ZR** = Aluminum / Black Zinc-Nickel **Z1** = Stainless Steel / Passivated
Shell Size-Insert Arr.	See "Insert Arrangements" Table
Contact Gender and Plating	**A** = Pin Connector, without Contacts **B** = Socket Connector, without Contacts **P1** = Pin Contacts, Silver Plating* **P2** = Pin Contacts, Gold Plating **S1** = Socket Contacts, Silver Plating* **S2** = Socket Contacts, Gold Plating * Size 12 and 16 contacts are gold-plated. Size 8, 4, 1/0 and 2/0 are silver plated.
Keyway Position	**-1**, **-2**, **-3**, **-4**, **-5**, or **-6**

RATINGS

Voltage (DWV): 2000 Volts AC
Current: Size 16 contact 13 amps
Size 12 contact 23 amps
Size 8 contact 60 amps
Size 4 contact 100 amps
Size 1/0 contact 175 amps
Size 2/0 contact 205 amps
Operating temperature:
Matl/Finish Codes ME, Z1: -65° to +200°C
Codes MT,NF, TZ, ZR: -65 to +175 °C
Durability: 500 mating cycles
EMI shielding effectiveness: 65 dB min. 100 MHz to 10 GHz
Shock: 50 g
Vibration: per MIL-DTL-38999 Series III
MIL-S-901 high impact shock: Grade A
Blowing sand and dust: MIL-STD-810, method 510.5
Altitude immersion: 75,000 feet
Ingress protection: IP67
Water pressure: 6 feet, 48 hours

CONSTRUCTION

Contacts: size #8 and larger: high conductivity copper alloy, gold or silver plated.
Size #12, #16: copper alloy, gold plated
Shell: Aluminum or stainless steel, see How to Order
Insulator: Glass-filled thermoset epoxy
Wire grommet, face seal: Fluorosilicone/silicone blend
Contact Retention clip: Beryllium copper
Insert retainer ring: High-temperature thermoplastic

Cable Connectors

970-033 Receptacle with Banding Platform

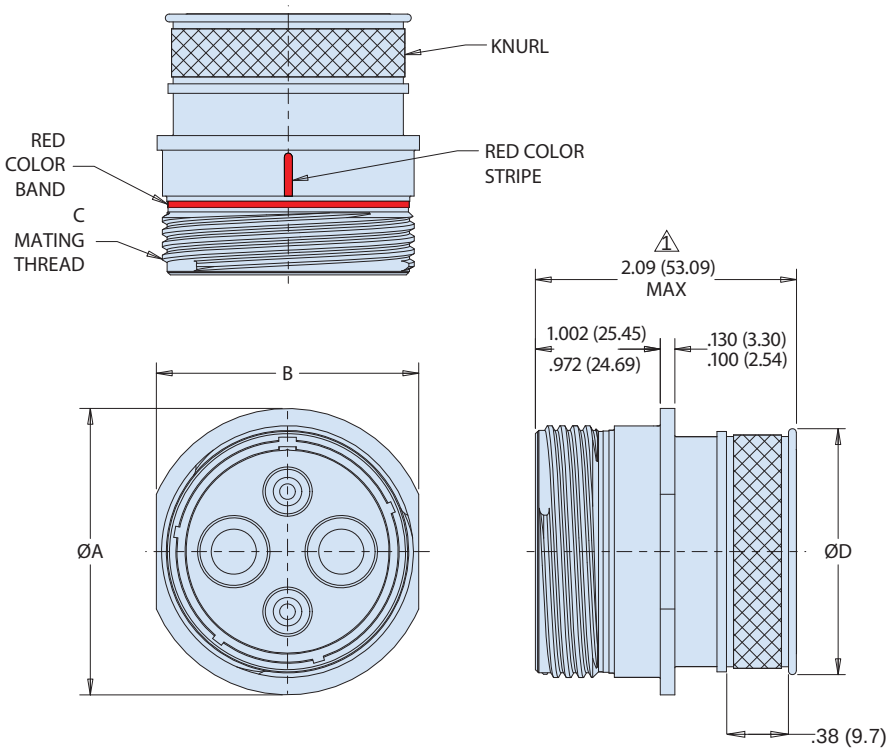

1 OAL IS 2.223 (56.46) FOR INSERT ARRANGEMENTS WITH #2/0 CONTACTS. GROMMET PROTRUDES BEYOND SHELL.

DIMENSIONS

Shell Size	ø A ± .010 (0.3) In.	ø A ± .010 (0.3) mm.	B ± .005 (0.1) In.	B ± .005 (0.1) mm.	C Mating Thread	ø D In.	ø D mm.
18	1.328	33.73	1.138	28.91	1.125-0.1P-0.3L-TS-2A	1.037	26.34
20	1.515	38.48	1.325	33.66	1.250-0.1P-0.3L-TS-2A	1.163	29.54
24	1.703	43.26	1.513	38.43	1.500-0.1P-0.3L-TS-2A	1.350	34.29
28	2.078	52.02	1.888	47.96	1.750-0.1P-0.3L-TS-2A	1.670	42.42
32	2.265	57.53	2.075	52.71	2.000-0.1P-0.3L-TS-2A	1.945	49.40
36	2.515	63.89	2.325	55.06	2.250-0.1P-0.3L-TS-2A	2.176	55.27
40	2.765	70.23	2.575	65.41	2.500-0.1P-0.3L-TS-2A	2.390	60.71

SHRINK BOOT

Connector accommodates lipped shrink boot. Boot is ordered separately. Boot provides cable strain relief and environmental protection. Type 1 high-performance semi-rigid elastomer resists fuels and oils and withstands temperature extremes. Available with W1 hot melt adhesive pre-coat. Operating temperature range -75 to +150 °C (no adhesive), -55 to +125 °C (with W1 adhesive).

Shell Size	Shrink Boot P/N	Adhesive Lined Shrink Boot P/N
18	770-001S106	770-001S106W1
20	770-001S106	770-001S106W1
24	770-001S107	770-001S107W1
28	770-001S108	770-001S108W1
32	770-001S108	770-001S108W1
36	770-001S109	770-001S109W1
40	770-001S109	770-001S109W1

SHIELD BAND

Shield band is not included with connector. Order separately.

Use banding strap to terminate cable braid directly to connector. Stainless steel band strap provides fast, cost-effective and highly reliable termination of braided metallic shielding. The Band-Master ATS® Advanced Cable Shield Termination System is the overwhelming favorite throughout the military aerospace and defense industries, providing excellent static loading and corrosion resistance in electrical wire interconnect systems.

Band Strap

Banding Tool
601-100

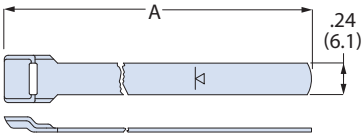

A Length in	A Length mm	Fits up to Dia. in	Fits up to Dia. mm	Band Strap (pre-coiled) Part Number
14	355	1.80	45.7	601-041
18	457	2.50	63.5	601-050

KEY POSITIONS

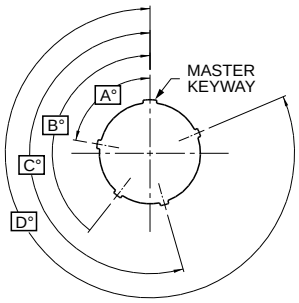

Position	A°	B°	C°	D°
1	80	142	196	293
2	135	170	200	310
3	49	169	200	244
4	66	140	200	257
5	62	145	180	280
6	79	153	197	272

© 2024 Glenair, Inc • 1211 Air Way, Glendale, CA 91201 • 818-247-6000 • www.glenair.com • U.S. CAGE code 06324 • Series 970 PowerTrip Connectors
Dimensions in Inches (millimeters) are subject to change without notice.

Cable Connectors
Turboflex® Cordsets

Please consult the Glenair factory or your local Glenair sales office for ordering information

PRODUCT FACTS

Conductors:
- Annealed stranded copper, nickel or silver coated
- High strandcount construction for excellent flexibility
- AWG 16 through 1/0

Insulation:
- Duralectric® rubber
- 2000 volt rating

Cable jacket:
- Duralectric™ rubber
- 2000 volt rating
- -65 to +200C°

Overmold Compound:
- Duralectric® rubber
- 2000 volt rating

Features:
- Excellent cold temperature flexibility
- 2000 volt rating
- Good abrasion resistance
- Excellent resistance to fuels and solvents
- Halogen free
- Flame retardant
- Water resistant
- Fugus resistant
- Excellent resistance to sunlight (UV) and ozone
- Fully shielded for EMI protection

Save cost and reduce leadtime with overmolded TurboFlex® power distribution cordsets.

Ultra-flexible conductors are constructed from high strand-count rope lay copper wire. These highly flexible conductors, combined with Glenair's high-performance jacketing result in cables ideally suited for applications where flexibility, durability, and weight reduction are required.

Amazingly durable—especially in cold weather—TurboFlex cable is jacketed with Glenair's innovative Duralectric® insulation compound that provides outstanding resistance to temperature extremes, ozone exposure, caustic chemicals including jet fuel, gamma radiation, and other forms of environmental and mechanical damage.

Long life and performance are critical in power distribution applications. TurboFlex,with its flexible conductors and durable jacketing delivers both.

STANDARD TURBOFLEX R VS. TURBOFLEX M

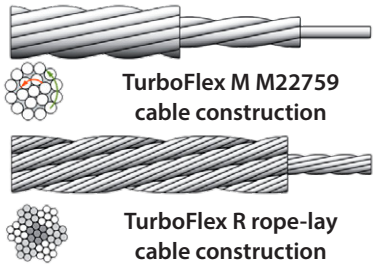

All TurboFlex cables are jacketed with Duralectric insulation, which contributes significantly to the flexibility of the product. Available wire cores include rope-lay cable (TurboFlex R) and M22759 cable (TurboFlex M). Standard TurboFlex R provides maxiumum flexibility. TurboFlex M has a slightly larger bend radius but far superior flexibility compared to standard M22759 cable.

DURALECTRIC™ RATINGS

Temperature Rating: -65° to 200°C (with excursions to 290°C) Per MIL-PRF-24758A.
Halogen free per IEC 60614-1. Less than 5mg of HCl per 1 gram of product used.
Accelerated weathering (solar) per IEC 60068-2-5; 56 days exposure (equivalent to 50 years in the sun.)
Flame resistant per IEC 60614-1:
Low smoke index per NES 711 (11.75); minimum standard is 25. Tested level is 11.75.
Smoke density class F1 per NF F 16-101 in accordance with DIN EN 60695-2-11:2001.
Toxicity index per NES 713 (1.9); minimum standard is 5. Tested level is 1.9.
Oxygen limiting index: 45.1 per EN ISO 4589-2:1999; minimum is 28.
12 second vertical burn: (pass) per 14CFR part 25.853 (a) AMDT25-116 APP F part 1 (a) (1) (ii)
ASTME E 595 vacuum outgassing–post bake results: TML .06%, CVCM .006%, WVR .02%
Fungus resistance testing (rating of 0) per MIL-STD-810F, method 508.5
ASTM D624 DIE B tear test: 150 KN/M
Fluids per MIL-STD-810F, method 504

Fuel	MIL-T-83133: JPG
Hydraulic fluid	MIL-H-5606: Royco 756
Lubricating oil	MOL-L-23699: Royco -500
Cleaner	MIL-C-85570: calla -855
Solvent	Isopropyl Alcohol: TT-I-735
De-Icer	AMS-1432: E36 runway de-icer
Coolant	MIL-C-87252: Coolanol 25R
Fire extinguishing foam	Amerex AFFF

Square Flange Receptacles

970-003 Square Flange Receptacle with Accessory Thread

970-003 square flange receptacle has accessory thread for attaching cable clamp, backshell or adapter. Coupling threads are triple-start ACME quick-disconnect. EMI protected with ground spring on plug. Aluminum or stainless steel shell has five polarizing keyways. Optional self-locking clinch nuts for easier installation. Crimp rear-release contacts are packaged with connector. PowerTrip connectors feature low resistance LouverBand contacts and are designed to withstand extreme environments.

- **Quick-disconnect, high shock, high vibration, self-locking connector**
- **2000 VAC (DWV)**
- **-65° to +200 °C**
- **Plug has EMI ground spring**
- **Crimp, rear-release contacts**
- **Advanced IP68+ sealing**

INSERT ARRANGEMENTS

Insert Arr.	Contact Size and Quantity					
	#16	#12	#8	#4	#1/0	#2/0
18-2			2			
18-4		2	2			
20-3			3			
20-4			4			
20-5		2	3			
20-7	4		3			
24-1					1	
24-2				2		
24-3				3		
24-5			5			
24-6		4		2		
24-A1						1
24-A6		3		3		
28-12	6		6			
28-15	15					
28-4				4		
28-8		1	7			
28-9	5			4		
32-12	2		10			
32-2					2	
32-20	1	19				
32-3					3	
32-4				2	2	
32-5				5		
32-6		3			3	
32-7				7		
32-A22		22				
36-16	3		13			
36-2						2
36-4					4	
36-9	14	14	2	1		
36-A8				8		
36-B8	4				4	
40-10	16		9	4		
40-21			21			
40-5					5	

HOW TO ORDER

Sample Part Number →	970-003	MT	18-2	P2	N	-1

Basic Part Number	**970-003** Square Flange Receptacle with Accessory Thread
Material/Finish	**ME** = Aluminum / Electroless Nickel **MT** = Aluminum / Nickel PTFE **NF** = Aluminum / Olive Drab Cadmium **TZ** = Aluminum / Tin-Zinc **ZR** = Aluminum / Black Zinc-Nickel **Z1** = Stainless Steel / Passivated
Shell Size-Insert Arr.	See "Insert Arrangements" Table
Contact Gender and Plating	**A** = Pin Connector, without Contacts **B** = Socket Connector, without Contacts **P1** = Pin Contacts, Silver Plating* **P2** = Pin Contacts, Gold Plating **S1** = Socket Contacts, Silver Plating* **S2** = Socket Contacts, Gold Plating * Size 12 and 16 contacts are gold-plated. Size 8, 4, 1/0 and 2/0 are silver plated.
Mounting Hole Option	**N** = Thru-Hole **T** = Clinch Nuts Installed in Mounting Holes for Back Panel Mounting*
Keyway Position	**-1**, **-2**, **-3**, **-4**, **-5**, or **-6**

*Stainless steel shells with mounting option "T" will have threaded holes in the shell flange in lieu of clinch nuts, with flange thickness of .185/.155.

RATINGS

Voltage (DWV): 2000 Volts AC
Current: Size 16 contact 13 amps
Size 12 contact 23 amps
Size 8 contact 60 amps
Size 4 contact 100 amps
Size 1/0 contact 175 amps
Size 2/0 contact 205 amps
Operating temperature:
Matl/Finish Codes ME, Z1: -65° to +200°C
Codes MT,NF, TZ, ZR: -65 to +175 °C
Durability: 500 mating cycles
EMI shielding effectiveness: 65 dB min. 100 MHz to 10 GHz
Shock: 50 g
Vibration: per MIL-DTL-38999 Series III
MIL-S-901 high impact shock: Grade A
Ingress protection: IP67
Water pressure: 6 feet, 48 hours

CONSTRUCTION

Contacts: size #8 and larger: high conductivity copper alloy, gold or silver plated.
Size #12, #16: copper alloy, gold plated
Shell: Aluminum or stainless steel, see How to Order
Insulator: Glass-filled thermoset epoxy
Wire grommet, face seal: Fluorosilicone/silicone blend
Contact Retention clip: Beryllium copper
Insert retainer ring: High-temperature thermoplastic
Clinch nuts: Stainless steel, passivated

© 2024 Glenair, Inc • 1211 Air Way, Glendale, CA 91201 • 818-247-6000 • www.glenair.com • U.S. CAGE code 06324 • Series 970 PowerTrip Connectors
Dimensions in Inches (millimeters) are subject to change without notice.

Square Flange Receptacles

970-003 Square Flange Receptacle with Accessory Thread

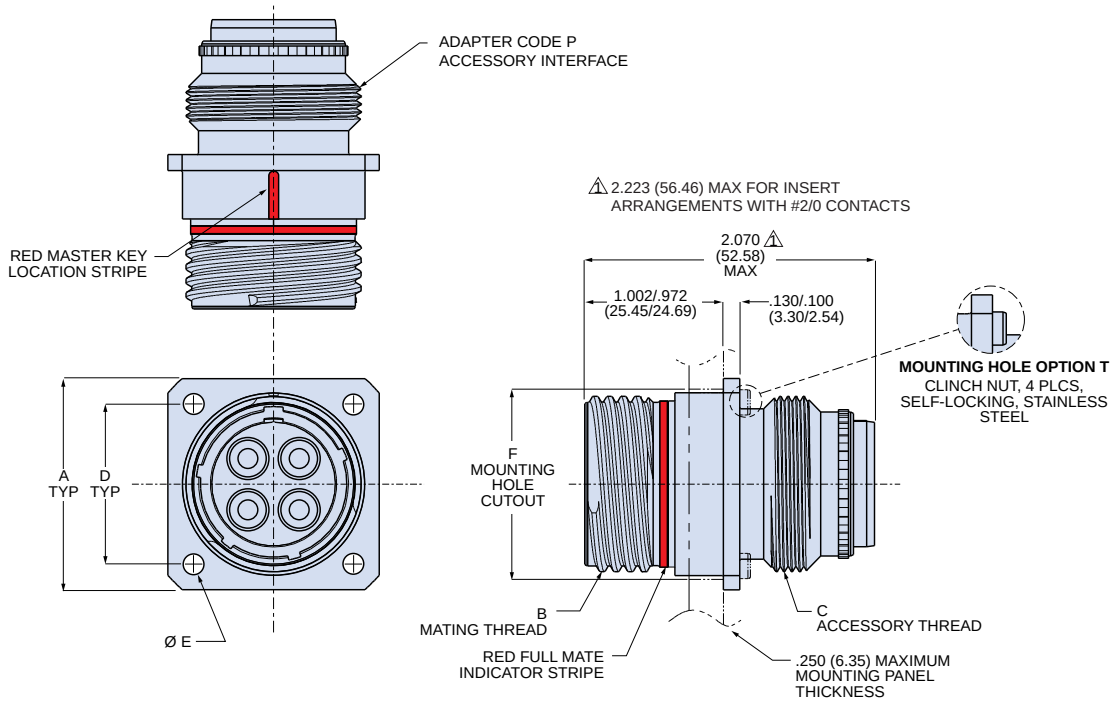

DIMENSIONS

Shell Size	A In.	A mm.	B Mating Thread	C Accessory Thd	D In.	D mm.	ø E ± .005 (0.1) In.	ø E ± .005 (0.1) mm.	E Clinch Nut Thd	ø F In.	ø F mm.
18	1.383	35.13	1.125-.1P-.3L-TS-2A	1.125-18 UNEF-2A	1.015	25.78	.146	3.71	6-32	1.187	30.15
20	1.508	38.30	1.250-.1P-.3L-TS-2A	1.250-18 UNEF-2A	1.140	28.96	.146	3.71	6-32	1.374	34.90
24	1.718	43.64	1.500-.1P-.3L-TS-2A	1.4375-18 UNEF-2A	1.281	32.54	.146	3.71	6-32	1.562	39.67
28	2.138	54.31	1.750-.1P-.3L-TS-2A	1.8125-16 UN-2A	1.568	39.83	.170	4.32	8-32	1.835	46.61
32	2.328	59.13	2.000-.1P-.3L-TS-2A	2.0625-16 UNS-2A	1.734	44.04	.170	4.32	8-32	2.093	53.16
36	2.578	65.48	2.250-.1P-.3L-TS-2A	2.250-16 UN-2A	1.984	50.39	.170	4.32	8-32	2.302	58.47
40	2.828	71.83	2.500-.1P-.3L-TS-2A	2.500-16 UN-2A	2.234	56.74	.170	4.32	8-32	2.562	65.07

KEY POSITIONS

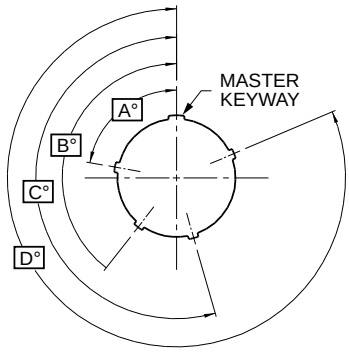

Position	A°	B°	C°	D°
1	80	142	196	293
2	135	170	200	310
3	49	169	200	244
4	66	140	200	257
5	62	145	180	280
6	79	153	197	272

Square Flange Receptacles

970-032 Square Flange Receptacle with Banding Platform

970-032 square flange receptacle has integral banding platform. Terminate cable shield directly to connector with Band-Master ATS® banding strap, sold separately. Coupling threads are triple-start ACME quick-disconnect. EMI protected with ground spring on plug. Aluminum or stainless steel shell has five polarizing keyways. Optional self-locking clinch nuts for easier installation. Crimp rear-release contacts are packaged with connector. PowerTrip connectors feature low resistance LouverBand contacts and are designed to withstand extreme environments.

- **Quick-disconnect, high shock, high vibration, self-locking connector**
- **2000 VAC (DWV)**
- **-65° to +200 °C**
- **Plug has EMI ground spring**
- **Crimp, rear-release contacts**
- **Advanced IP68+ sealing**

INSERT ARRANGEMENTS

Insert Arr.	Contact Size and Quantity					
	#16	#12	#8	#4	#1/0	#2/0
18-2			2			
18-4		2	2			
20-3			3			
20-4			4			
20-5		2	3			
20-7	4		3			
24-1					1	
24-2				2		
24-3				3		
24-5			5			
24-6		4		2		
24-A1						1
24-A6		3		3		
28-12	6		6			
28-15	15					
28-4				4		
28-8		1	7			
28-9	5			4		
32-12	2		10			
32-2					2	
32-20	1	19				
32-3					3	
32-4				2	2	
32-5				5		
32-6		3			3	
32-7				7		
32-A22		22				
36-16	3		13			
36-2						2
36-4					4	
36-9	14	14	2	1		
36-A8				8		
36-B8	4				4	
40-10	16		9	4		
40-21			21			
40-5					5	

HOW TO ORDER

Sample Part Number → 970-032 NF 24-2 S1 T -1

Basic Part Number	**970-032** Square-Flange Receptacle with Banding Platform
Material/Finish	**ME** = Aluminum / Electroless Nickel **MT** = Aluminum / Nickel PTFE **NF** = Aluminum / Olive Drab Cadmium **TZ** = Aluminum / Tin-Zinc **ZR** = Aluminum / Black Zinc-Nickel **Z1** = Stainless Steel / Passivated
Shell Size-Insert Arr.	See "Insert Arrangements" Table
Contact Gender and Plating	**A** = Pin Connector, without Contacts **B** = Socket Connector, without Contacts **P1** = Pin Contacts, Silver Plating* **P2** = Pin Contacts, Gold Plating **S1** = Socket Contacts, Silver Plating* **S2** = Socket Contacts, Gold Plating * Size 12 and 16 contacts are gold-plated. Size 8, 4, 1/0 and 2/0 are silver plated.
Mounting Hole Option	**N** = Thru-Hole **T** = Clinch Nuts Installed in Mounting Holes for Back Panel Mounting*
Keyway Position	**-1**, **-2**, **-3**, **-4**, **-5**, or **-6**

*Stainless steel shells with mounting option "T" will have threaded holes in the shell flange in lieu of clinch nuts, with flange thickness of .185/.155.

RATINGS

Voltage (DWV): 2000 Volts AC
Current: Size 16 contact 13 amps
Size 12 contact 23 amps
Size 8 contact 60 amps
Size 4 contact 100 amps
Size 1/0 contact 175 amps
Size 2/0 contact 205 amps
Operating temperature:
Matl/Finish Codes ME, Z1: -65° to +200°C
Codes MT,NF, TZ, ZR: -65 to +175 °C
Durability: 500 mating cycles
EMI shielding effectiveness: 65 dB min. 100 MHz to 10 GHz
Shock: 50 g
Vibration: per MIL-DTL-38999 Series III
MIL-S-901 high impact shock: Grade A
Ingress protection: IP67
Water pressure: 6 feet, 48 hours

CONSTRUCTION

Contacts: size #8 and larger: high conductivity copper alloy, gold or silver plated.
Size #12, #16: copper alloy, gold plated
Shell: Aluminum or stainless steel, see How to Order
Insulator: Glass-filled thermoset epoxy
Wire grommet, face seal: Fluorosilicone/silicone blend
Contact Retention clip: Beryllium copper
Insert retainer ring: High-temperature thermoplastic
Clinch nuts: Stainless steel, passivated

© 2024 Glenair, Inc • 1211 Air Way, Glendale, CA 91201 • 818-247-6000 • www.glenair.com • U.S. CAGE code 06324 • Series 970 PowerTrip Connectors
Dimensions in Inches (millimeters) are subject to change without notice.

Square Flange Receptacles

970-032 Square Flange Receptacle with Banding Platform

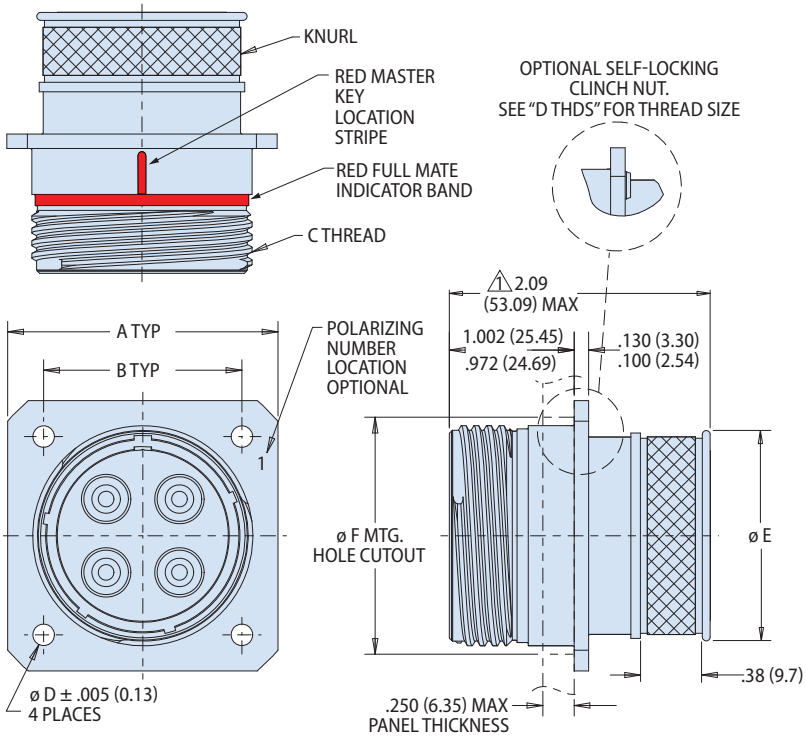

1 2.223 (56.46) MAX FOR INSERT ARRANGEMENTS WITH #2/0 CONTACTS. GROMMET PROTRUDES FROM SHELL

DIMENSIONS

Shell Size	A In.	A mm.	B In.	B mm.	C Mating Thd 0.1P-0.3L-TS-2A	ø D Thru In.	ø D Thru mm.	D Thds	ø E In.	ø E mm.	øF Mtng Hole In.	øF Mtng Hole mm.
18	1.383	35.13	1.015	25.78	1.125	0.146	3.7	#6-32	1.037	26.34	1.187	30.15
20	1.508	38.30	1.140	28.96	1.250	0.146	3.7	#6-32	1.163	29.54	1.374	34.90
24	1.718	43.64	1.281	32.54	1.500	0.146	3.7	#6-32	1.350	34.29	1.562	39.67
28	2.138	54.31	1.568	39.83	1.750	0.170	4.3	#8-32	1.670	42.42	1.835	46.61
32	2.328	59.13	1.734	44.04	2.000	0.170	4.3	#8-32	1.945	49.40	2.093	53.16
36	2.578	65.48	1.984	50.39	2.250	0.170	4.3	#8-32	2.176	55.27	2.302	58.47
40	2.828	71.83	2.234	56.74	2.500	0.170	4.3	#8-32	2.350	59.69	2.562	65.07

SHRINK BOOT

Connector accommodates lipped shrink boot. Boot is ordered separately. Boot provides cable strain relief and environmental protection. Type 1 high-performance semi-rigid elastomer resists fuels and oils and withstands temperature extremes. Available with W1 hot melt adhesive pre-coat. Operating temperature range -75 to +150 °C (no adhesive), -55 to +125 °C (with W1 adhesive).

Shell Size	Shrink Boot P/N	Adhesive Lined Shrink Boot P/N
18	770-001S106	770-001S106W1
20	770-001S106	770-001S106W1
24	770-001S107	770-001S107W1
28	770-001S108	770-001S108W1
32	770-001S108	770-001S108W1
36	770-001S109	770-001S109W1
40	770-001S109	770-001S109W1

SHIELD BAND

Shield band is not included with connector. Order separately.

Use banding strap to terminate cable braid directly to connector. Stainless steel band strap provides fast, cost-effective and highly reliable termination of braided metallic shielding. The Band-Master ATS® Advanced Cable Shield Termination System is the overwhelming favorite throughout the military aerospace and defense industries, providing excellent static loading and corrosion resistance in electrical wire interconnect systems.

Band Strap

Banding Tool
601-100

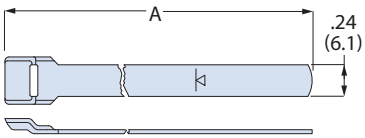

A Length in	A Length mm	Fits up to Dia. in	Fits up to Dia. mm	Band Strap (pre-coiled) Part Number
14	355	1.80	45.7	601-041
18	457	2.50	63.5	601-050

KEY POSITIONS

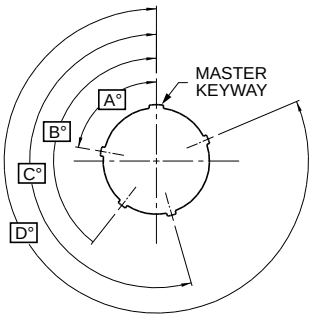

Position	A°	B°	C°	D°
1	80	142	196	293
2	135	170	200	310
3	49	169	200	244
4	66	140	200	257
5	62	145	180	280
6	79	153	197	272

Square Flange Receptacles

970-009 Low Profile Square Flange Receptacle

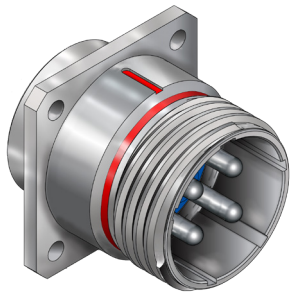

970-009 square flange receptacle has shortened rear length for use in limited clearance applications. The accessory threads are removed and the rear grommet is replaced with a thinner wire separator (not immersion rated). Coupling threads are triple-start ACME quick-disconnect. Optional self-locking clinch nuts for easier installation. Crimp rear-release contacts are packaged with connector. PowerTrip connectors feature low resistance LouverBand contacts and are designed to withstand extreme environments.

- Quick-disconnect, high shock, high vibration, self-locking connector
- 2000 VAC (DWV)
- -65° to +200 °C
- Plug has EMI ground spring
- Crimp, rear-release contacts
- Advanced IP68+ sealing

INSERT ARRANGEMENTS

Insert Arr.	Contact Size and Quantity					
	#16	#12	#8	#4	#1/0	#2/0
18-2			2			
18-4		2	2			
20-3			3			
20-4			4			
20-5		2	3			
20-7	4		3			
24-1					1	
24-2				2		
24-3				3		
24-5			5			
24-6		4		2		
24-A1						1
24-A6		3		3		
28-12	6		6			
28-15	15					
28-4				4		
28-8		1	7			
28-9	5			4		
32-12	2		10			
32-2					2	
32-20	1	19				
32-3					3	
32-4				2	2	
32-5				5		
32-6		3			3	
32-7				7		
32-A22		22				
36-16	3		13			
36-2						2
36-4					4	
36-9	14	14	2	1		
36-A8				8		
36-B8	4				4	
40-10	16		9	4		
40-21			21			
40-5					5	

HOW TO ORDER

Sample Part Number → 970-009 | NF | 24-2 | S1 | T | -1

Basic Part Number	**970-009** Square Flange Receptacle, Box Mount
Material/Finish	**ME** = Aluminum / Electroless Nickel **MT** = Aluminum / Nickel PTFE **NF** = Aluminum / Olive Drab Cadmium **TZ** = Aluminum / Tin-Zinc **ZR** = Aluminum / Black Zinc-Nickel **Z1** = Stainless Steel / Passivated
Shell Size-Insert Arr.	See "Insert Arrangements" Table
Contact Gender and Plating	**A** = Pin Connector, without Contacts **B** = Socket Connector, without Contacts **P1** = Pin Contacts, Silver Plating* **P2** = Pin Contacts, Gold Plating **S1** = Socket Contacts, Silver Plating* **S2** = Socket Contacts, Gold Plating * Size 12 and 16 contacts are gold-plated. Size 8, 4, 1/0 and 2/0 are silver plated.
Mounting Hole Option	**N** = Thru-Hole **T** = Clinch Nuts Installed in Mounting Holes for Back Panel Mounting*
Keyway Position	**-1**, **-2**, **-3**, **-4**, **-5**, or **-6**

*Stainless steel shells with mounting option "T" will have threaded holes in the shell flange in lieu of clinch nuts, with flange thickness of .185/.155.

RATINGS

Voltage (DWV): 2000 Volts AC
Current: Size 16 contact 13 amps
Size 12 contact 23 amps
Size 8 contact 60 amps
Size 4 contact 100 amps
Size 1/0 contact 175 amps
Size 2/0 contact 205 amps
Operating temperature:
Matl/Finish Codes ME, Z1: -65° to +200°C
Codes MT,NF, TZ, ZR: -65 to +175 °C
Durability: 500 mating cycles
EMI shielding effectiveness: 65 dB min. 100 MHz to 10 GHz
Shock: 50 g
Vibration: per MIL-DTL-38999 Series III
MIL-S-901 high impact shock: Grade A
Altitude immersion: not rated
Ingress protection: not rated
Water pressure: not rated

CONSTRUCTION

Contacts: size #8 and larger: high conductivity copper alloy, gold or silver plated.
Size #12, #16: copper alloy, gold plated
Shell: Aluminum or stainless steel, see How to Order
Insulator: Glass-filled thermoset epoxy
Wire separator, face seal: Fluorosilicone/silicone blend
Contact retention clip: Beryllium copper
Insert retainer ring: High-temperature thermoplastic
Clinch nuts: Stainless steel, passivated

© 2024 Glenair, Inc • 1211 Air Way, Glendale, CA 91201 • 818-247-6000 • www.glenair.com • U.S. CAGE code 06324 • Series 970 PowerTrip Connectors
Dimensions in Inches (millimeters) are subject to change without notice.

Square Flange Receptacles

970-009 Low Profile Square Flange Receptacle

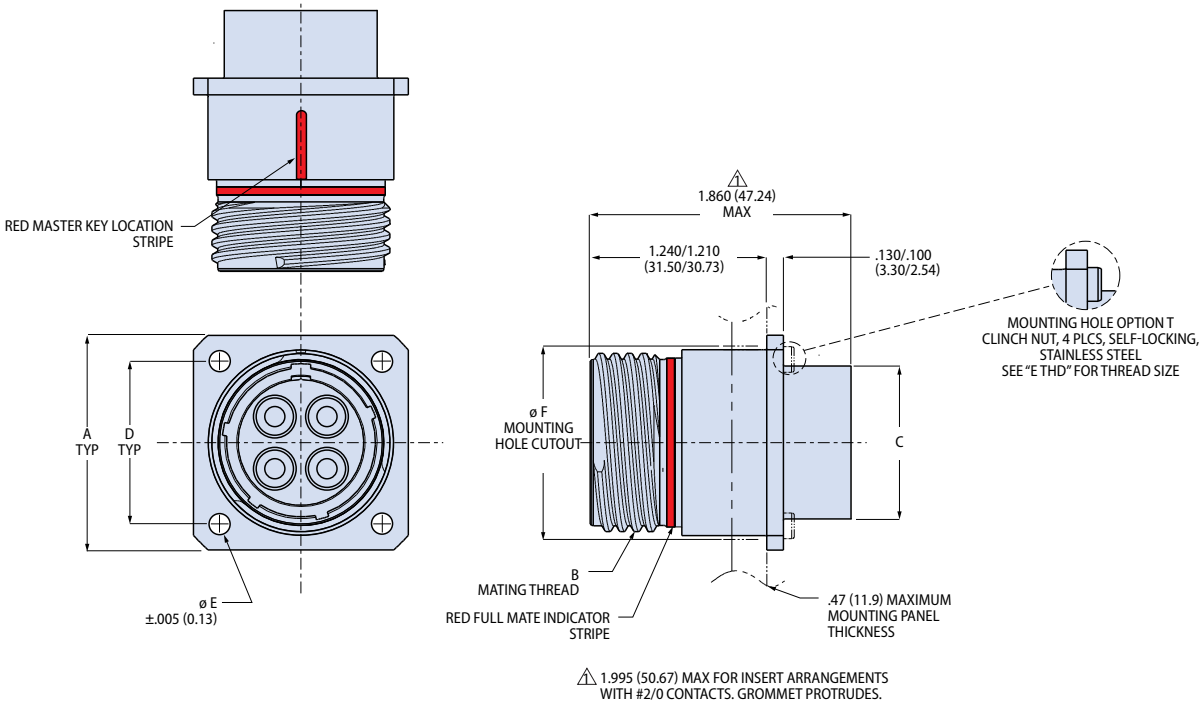

DIMENSIONS

Shell Size	A In.	A mm.	B Mating Thread	C In.	C mm.	D In.	D mm.	ø E In.	ø E mm.	E Thd	ø F In.	ø F mm.
18	1.383	35.13	1.125-.1P-.3L-TS-2A	.972	24.69	1.015	25.78	.146	3.71	6-32	1.187	30.15
20	1.508	38.30	1.250-.1P-.3L-TS-2A	1.116	28.35	1.140	28.96	.146	3.71	6-32	1.374	34.90
24	1.718	43.64	1.500-.1P-.3L-TS-2A	1.300	33.02	1.281	32.54	.146	3.71	6-32	1.562	39.67
28	2.138	54.31	1.750-.1P-.3L-TS-2A	1.604	40.74	1.568	39.83	.170	4.32	8-32	1.835	46.61
32	2.328	59.13	2.000-.1P-.3L-TS-2A	1.875	47.63	1.734	44.04	.170	4.32	8-32	2.093	53.16
36	2.578	65.48	2.250-.1P-.3L-TS-2A	2.093	53.16	1.984	50.39	.170	4.32	8-32	2.302	58.47
40	2.828	71.83	2.500-.1P-.3L-TS-2A	2.310	58.67	2.234	56.74	.170	4.32	8-32	2.562	65.07

KEY POSITIONS

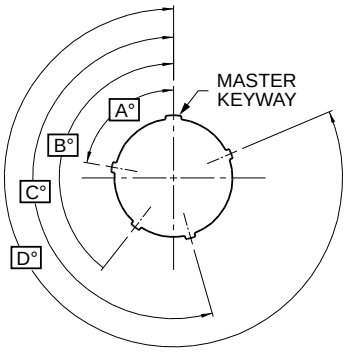

Position	A°	B°	C°	D°
1	80	142	196	293
2	135	170	200	310
3	49	169	200	244
4	66	140	200	257
5	62	145	180	280
6	79	153	197	272

Square Flange Receptacles

970-013 Low Profile Square Flange Receptacle with O-Ring

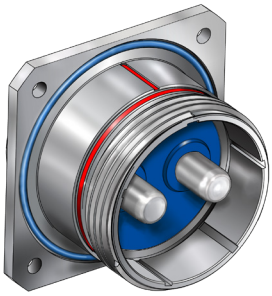

970-013 square flange receptacle has O-ring and shortened rear length for use in limited clearance applications. The rear grommet is replaced with a thin wire separator (not immersion rated). Coupling threads are triple-start ACME quick-disconnect. Optional self-locking clinch nuts for easier installation. Crimp rear-release contacts are packaged with connector. PowerTrip connectors feature low resistance LouverBand contacts and are designed to withstand extreme environments.

- Quick-disconnect, high shock, high vibration, self-locking connector
- 2000 VAC (DWV)
- -65° to +200 °C
- Plug has EMI ground spring
- Crimp, rear-release contacts
- Advanced IP68+ sealing

INSERT ARRANGEMENTS

Insert Arr.	Contact Size and Quantity					
	#16	#12	#8	#4	#1/0	#2/0
18-2			2			
18-4		2	2			
20-3			3			
20-4			4			
20-5		2	3			
20-7	4		3			
24-1					1	
24-2				2		
24-3				3		
24-5			5			
24-6		4		2		
24-A1						1
24-A6		3		3		
28-12	6		6			
28-15	15					
28-4				4		
28-8		1	7			
28-9	5			4		
32-12	2		10			
32-2					2	
32-20	1	19				
32-3					3	
32-4				2	2	
32-5				5		
32-6		3			3	
32-7				7		
32-A22		22				
36-16	3		13			
36-2						2
36-4					4	
36-9	14	14	2	1		
36-A8				8		
36-B8	4				4	
40-10	16		9	4		
40-21			21			
40-5					5	

HOW TO ORDER

Sample Part Number →	970-013	NF	24-2	S1	T	-1
Basic Part Number	**970-013** Square Flange Receptacle with O-ring					
Material/Finish	**ME** = Aluminum / Electroless Nickel **MT** = Aluminum / Nickel PTFE **NF** = Aluminum / Olive Drab Cadmium **TZ** = Aluminum / Tin-Zinc **ZR** = Aluminum / Black Zinc-Nickel **Z1** = Stainless Steel / Passivated					
Shell Size-Insert Arr.	See "Insert Arrangements" Table					
Contact Gender and Plating	**A** = Pin Connector, without Contacts **B** = Socket Connector, without Contacts **P1** = Pin Contacts, Silver Plating* **P2** = Pin Contacts, Gold Plating **S1** = Socket Contacts, Silver Plating* **S2** = Socket Contacts, Gold Plating * Size 12 and 16 contacts are gold-plated. Size 8, 4, 1/0 and 2/0 are silver plated.					
Mounting Hole Option	**N** = Thru-Hole **T** = Clinch Nuts Installed in Mounting Holes for Back Panel Mounting*					
Keyway Position	**-1**, **-2**, **-3**, **-4**, **-5**, or **-6**					

*Stainless steel shells with mounting option "T" will have threaded holes in the shell flange in lieu of clinch nuts, with flange thickness of .185/.155.

RATINGS

Voltage (DWV): 2000 Volts AC
Current: Size 16 contact 13 amps
Size 12 contact 23 amps
Size 8 contact 60 amps
Size 4 contact 100 amps
Size 1/0 contact 175 amps
Size 2/0 contact 205 amps
Operating temperature:
Matl/Finish Codes ME, Z1: -65° to +200°C
Codes MT,NF, TZ, ZR: -65 to +175 °C
Durability: 500 mating cycles
EMI shielding effectiveness: 65 dB min. 100 MHz to 10 GHz
Shock: 50 g
Vibration: per MIL-DTL-38999 Series III
MIL-S-901 high impact shock: Grade A
Altitude immersion: not rated
Ingress protection: not rated
Water pressure: not rated

CONSTRUCTION

Contacts: size #8 and larger: high conductivity copper alloy, gold or silver plated.
Size #12, #16: copper alloy, gold plated
Shell: Aluminum or stainless steel, see How to Order
Insulator: Glass-filled thermoset epoxy
Wire separator, face seal: Fluorosilicone/silicone blend
O-ring: Fluorosilicone
Contact retention clip: Beryllium copper
Insert retainer ring: High-temperature thermoplastic
Clinch nuts: Stainless steel, passivated

© 2024 Glenair, Inc • 1211 Air Way, Glendale, CA 91201 • 818-247-6000 • www.glenair.com • U.S. CAGE code 06324 • Series 970 PowerTrip Connectors
Dimensions in Inches (millimeters) are subject to change without notice.

Square Flange Receptacles

970-013 Low Profile Square Flange Receptacle with O-Ring

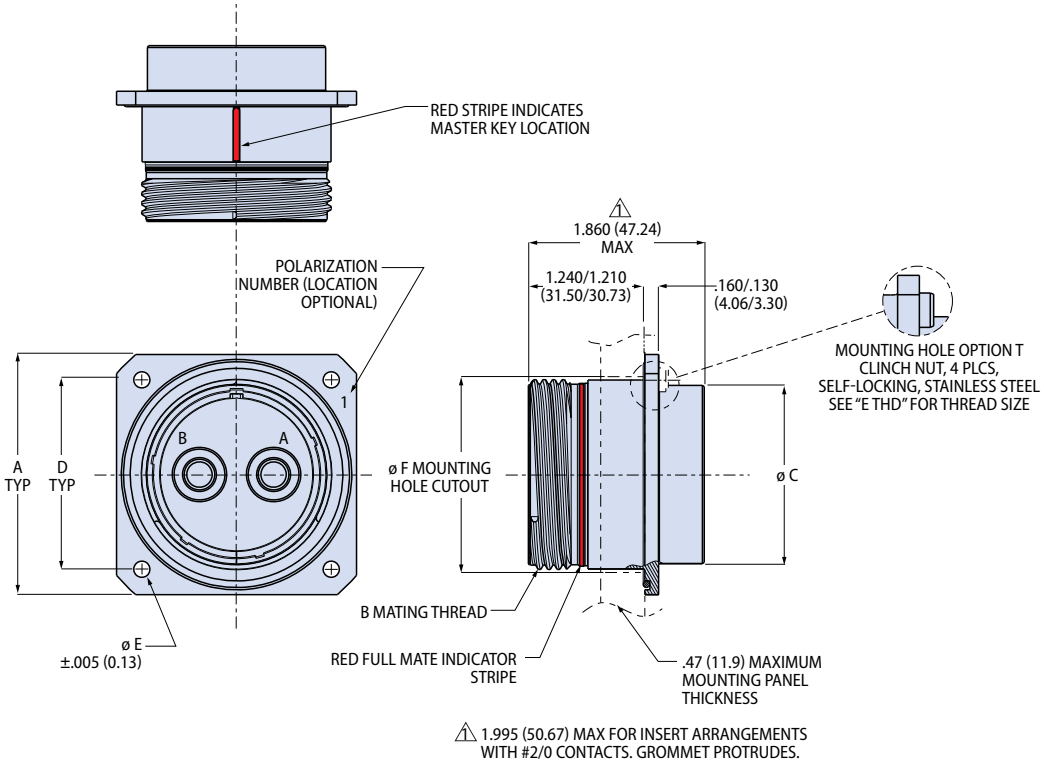

DIMENSIONS

Shell Size	A In.	A mm.	B Mating Thread	C In.	C mm.	D In.	D mm.	ø E In.	ø E mm.	E Thd	ø F In.	ø F mm.
18	1.591	40.41	1.125-.1P-.3L-TS-2A	.972	24.69	1.275	32.39	.146	3.71	6-32	1.187	30.15
20	1.779	45.19	1.250-.1P-.3L-TS-2A	1.116	28.35	1.408	35.76	.146	3.71	6-32	1.374	34.90
24	2.029	51.54	1.500-.1P-.3L-TS-2A	1.300	33.02	1.585	40.26	.146	3.71	6-32	1.562	39.67
28	2.404	61.06	1.750-.1P-.3L-TS-2A	1.604	40.74	1.905	48.39	.170	4.32	8-32	1.835	46.61
32	2.529	64.24	2.000-.1P-.3L-TS-2A	1.875	47.63	1.993	50.62	.170	4.32	8-32	2.093	53.16
36	2.654	67.41	2.250-.1P-.3L-TS-2A	2.093	53.16	2.081	52.86	.170	4.32	8-32	2.302	58.47
40	3.029	76.94	2.500-.1P-.3L-TS-2A	2.310	58.67	2.347	59.61	.170	4.32	8-32	2.562	65.07

KEY POSITIONS

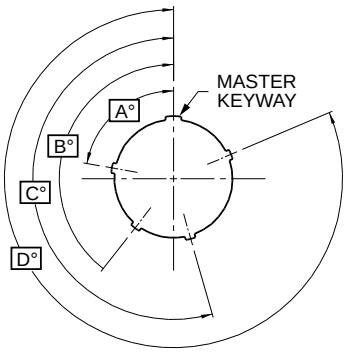

Position	A°	B°	C°	D°
1	80	142	196	293
2	135	170	200	310
3	49	169	200	244
4	66	140	200	257
5	62	145	180	280
6	79	153	197	272

Square Flange Receptacles

970-008 Square Flange PC Tail Receptacle, #8 Contacts

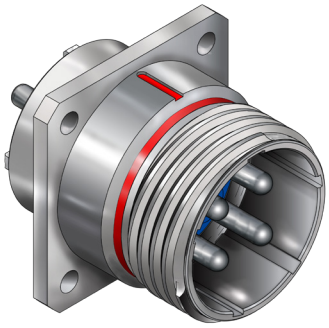

970-008 square flange receptacle has printed circuit terminals. Available for insert arrangements with size #8 contacts. Terminals are non-removable and are sealed with RTV silicone. Coupling threads are triple-start ACME quick-disconnect. Optional self-locking clinch nuts for easier installation. PowerTrip connectors feature low resistance LouverBand contacts and are designed to withstand extreme environments.

- Quick-disconnect, high shock, high vibration, self-locking connector
- 2000 VAC (DWV)
- -65° to +200 °C
- Plug has EMI ground spring
- Crimp, rear-release contacts
- Advanced IP68+ sealing

RATINGS

Voltage (DWV): 2000 Volts AC
Current: Size 16 contact 13 amps
Size 12 contact 23 amps
Size 8 contact 60 amps
Operating temperature:
Matl/Finish Codes ME, Z1: -45 to +200 °C
Codes MT,NF, TZ, ZR: -45 to +175 °C
Durability: 500 mating cycles
EMI shielding effectiveness: 65 dB min. 100 MHz to 10 GHz
Shock: 50 g
Vibration: per MIL-DTL-38999 Series III
MIL-S-901 high impact shock: Grade A
Blowing sand and dust: MIL-STD-810, method 510.5
Altitude immersion: 75,000 feet
Ingress protection: IP67
Water pressure: 6 feet, 48 hours

CONSTRUCTION

Contacts: size #8: high conductivity copper alloy, gold or silver plated.
Size #12, #16: copper alloy, gold plated
Shell: Aluminum or stainless steel, see How to Order
Insulator: Glass-filled thermoset epoxy
Interfacial seal: Fluorosilicone/silicone blend
Potting compound: RTV-3140
Clinch nuts: Stainless steel, passivated

HOW TO ORDER

Sample Part Number →	**970-008**	**ME**	**20-4**	**P1**	**A**	**T**	**-1**

Basic Part Number	**970-008** Square Flange PC Tail Receptacle
Material/Finish	**ME** = Aluminum / Electroless Nickel **MT** = Aluminum / Nickel PTFE **NF** = Aluminum / Olive Drab Cadmium **TZ** = Aluminum / Tin-Zinc **ZR** = Aluminum / Black Zinc-Nickel **Z1** = Stainless Steel / Passivated
Shell Size-Insert Arrangement	**18-2** = (2) #8 contacts **18-4** = (2) #8 contacts, (2) #12 contacts **20-3** = (3) #8 contacts **20-4** = (4) #8 contacts **20-5** = (3) #8 contacts, (2) #12 contacts **20-7** = (3) #8 contacts, (4) #16 contacts **24-5** = (5) #8 contacts
Contact Gender and Plating	**P1** = Pin Contacts, Silver Plating* **P2** = Pin Contacts, Gold Plating **S1** = Socket Contacts, Silver Plating* **S2** = Socket Contacts, Gold Plating * Size 12 and 16 contacts are gold-plated. Size 8, 4, 1/0 and 2/0 are silver plated.
PC Tail Length	**A** = .125 (3.18) **B** = .250 (6.35) **C** = .375 (9.53)
Mounting Hole Option	**N** = Thru-Hole **T** = Clinch Nuts Installed in Mounting Holes for Back Panel Mounting*
Keyway Position	**-1**, **-2**, **-3**, **-4**, **-5**, or **-6**

*Stainless steel shells with mounting option "T" will have threaded holes in the shell flange in lieu of clinch nuts, with flange thickness of .185/.155.

KEY POSITIONS

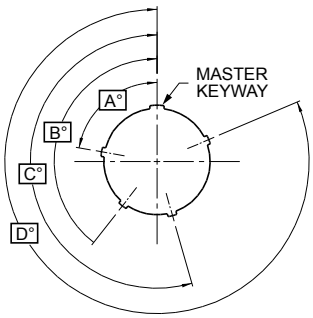

Position	A°	B°	C°	D°
1	80	142	196	293
2	135	170	200	310
3	49	169	200	244
4	66	140	200	257
5	62	145	180	280
6	79	153	197	272

© 2024 Glenair, Inc • 1211 Air Way, Glendale, CA 91201 • 818-247-6000 • www.glenair.com • U.S. CAGE code 06324 • Series 970 PowerTrip Connectors
Dimensions in Inches (millimeters) are subject to change without notice.

Square Flange Receptacles

970-008 Square Flange PC Tail Receptacle, #8 Contacts

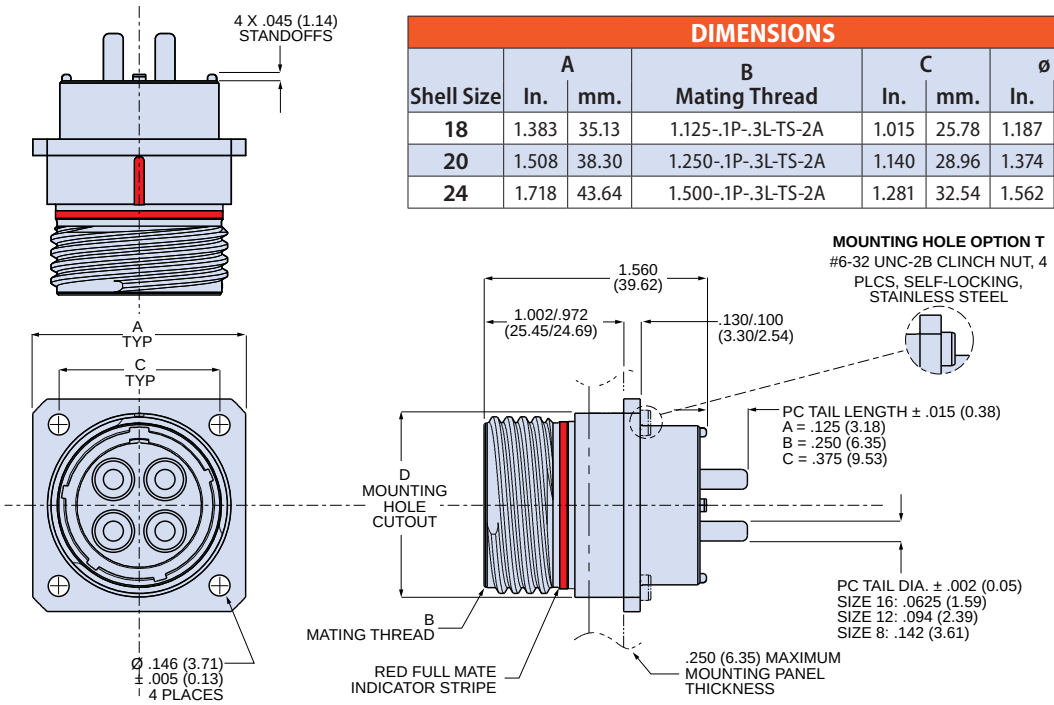

DIMENSIONS

Shell Size	A In.	A mm.	B Mating Thread	C In.	C mm.	ø D In.	ø D mm.
18	1.383	35.13	1.125-.1P-.3L-TS-2A	1.015	25.78	1.187	30.15
20	1.508	38.30	1.250-.1P-.3L-TS-2A	1.140	28.96	1.374	34.90
24	1.718	43.64	1.500-.1P-.3L-TS-2A	1.281	32.54	1.562	39.67

970-008 PRINTED CIRCUIT BOARD PATTERNS

Insert Arrangement	Component Mounting Side of PCB: Pin Connector	Component Mounting Side of PCB: Socket Connector
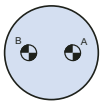 18-2 2 #8 Contacts	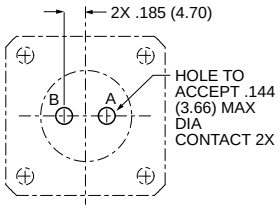	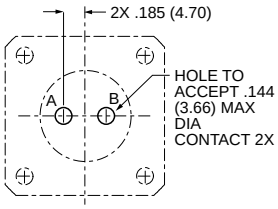
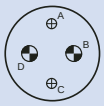 18-4 2 #8 Contacts, 2 #12 Contacts	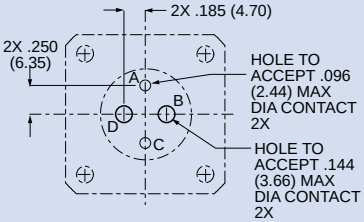	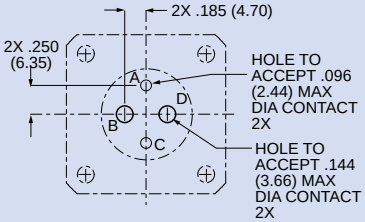
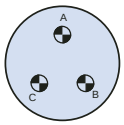 20-3 3 #8 Contacts	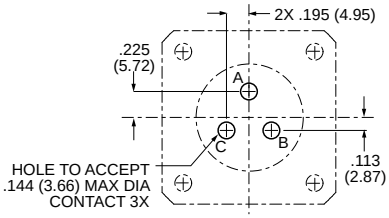	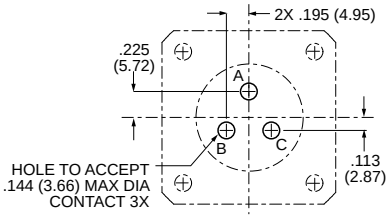

Square Flange Receptacles
970-008 Square Flange PC Tail Receptacle, #8 Contacts

970-008 PRINTED CIRCUIT BOARD PATTERNS

Insert Arrangement	Component Mounting Side of PCB: Pin Connector	Component Mounting Side of PCB: Socket Connector
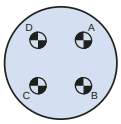 **20-4** **4#8 Contacts**	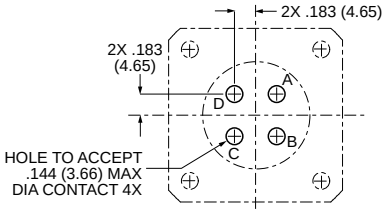	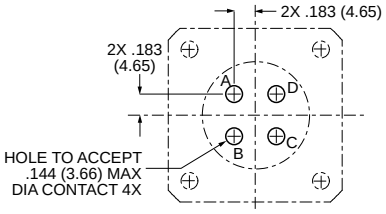
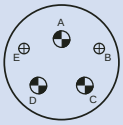 **20-5** **3#8 Contacts, 2 #12 Contacts**	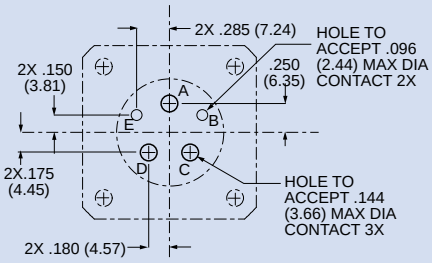	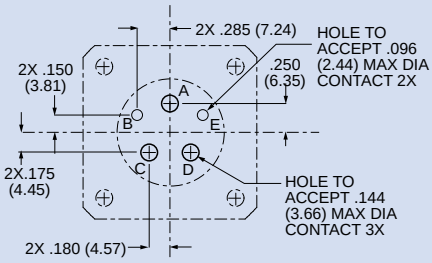
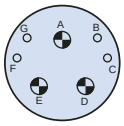 **20-7** **3#8 Contacts, 4 #16 Contacts**	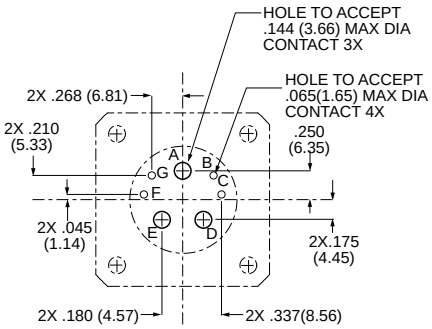	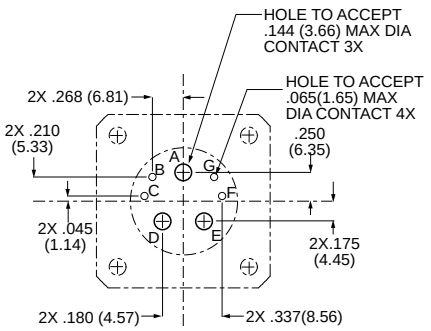
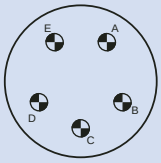 **24-5** **5#8 Contacts**	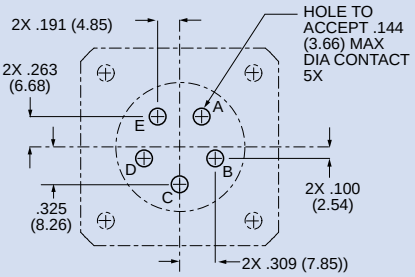	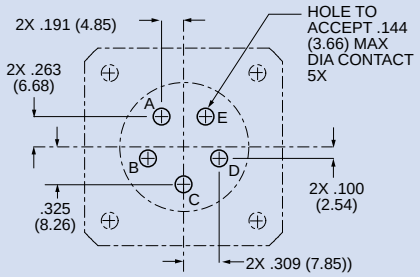

© 2024 Glenair, Inc • 1211 Air Way, Glendale, CA 91201 • 818-247-6000 • www.glenair.com • U.S. CAGE code 06324 • Series 970 PowerTrip Connectors
Dimensions in Inches (millimeters) are subject to change without notice.

POWER TRIP®

Jam Nut Receptacles

970-004 Jam Nut Receptacle with Accessory Thread

970-004 jam nut receptacle has accessory thread for attaching cable clamp, backshell or adapter. Coupling threads are triple-start ACME quick-disconnect. EMI protected with ground spring on plug. Aluminum or stainless steel shell has five polarizing keyways. Crimp rear-release contacts are packaged with connector. PowerTrip connectors feature low resistance LouverBand contacts and are designed to withstand extreme environments.

- Quick-disconnect, high shock, high vibration, self-locking connector
- 2000 VAC (DWV)
- -65° to +200 °C
- Plug has EMI ground spring
- Crimp, rear-release contacts
- Advanced IP68+ sealing

INSERT ARRANGEMENTS

Insert Arr.	Contact Size and Quantity					
	#16	#12	#8	#4	#1/0	#2/0
18-2			2			
18-4		2	2			
20-3			3			
20-4			4			
20-5		2	3			
20-7	4		3			
24-1					1	
24-2				2		
24-3				3		
24-5			5			
24-6		4		2		
24-A1						1
24-A6		3		3		
28-12	6		6			
28-15	15					
28-4				4		
28-8		1	7			
28-9	5			4		
32-12	2		10			
32-2					2	
32-20	1	19				
32-3					3	
32-4				2	2	
32-5				5		
32-6		3			3	
32-7				7		
32-A22		22				
36-16	3		13			
36-2						2
36-4					4	
36-9	14	14	2	1		
36-A8				8		
36-B8	4				4	
40-10	16		9	4		
40-21			21			
40-5					5	

HOW TO ORDER

Sample Part Number ➜	970-004	TZ	36-4	P1	-1

Basic Part Number	**970-004** Jam Nut Receptacle with Accessory Thread
Material/Finish	**ME** = Aluminum / Electroless Nickel **MT** = Aluminum / Nickel PTFE **NF** = Aluminum / Olive Drab Cadmium **TZ** = Aluminum / Tin-Zinc **ZR** = Aluminum / Black Zinc-Nickel **Z1** = Stainless Steel / Passivated
Shell Size-Insert Arr.	See "Insert Arrangements" Table
Contact Gender and Plating	**A** = Pin Connector, without Contacts **B** = Socket Connector, without Contacts **P1** = Pin Contacts, Silver Plating* **P2** = Pin Contacts, Gold Plating **S1** = Socket Contacts, Silver Plating* **S2** = Socket Contacts, Gold Plating * Size 12 and 16 contacts are gold-plated. Size 8, 4, 1/0 and 2/0 are silver plated.
Keyway Position	**-1**, **-2**, **-3**, **-4**, **-5**, or **-6**

RATINGS

Voltage (DWV): 2000 Volts AC
Current: Size 16 contact 13 amps
Size 12 contact 23 amps
Size 8 contact 60 amps
Size 4 contact 100 amps
Size 1/0 contact 175 amps
Size 2/0 contact 205 amps
Operating temperature:
Matl/Finish Codes ME, Z1: -65° to +200°C
Codes MT,NF, TZ, ZR: -65 to +175 °C
Durability: 500 mating cycles
EMI shielding effectiveness: 65 dB min. 100 MHz to 10 GHz
Shock: 50 g
Vibration: per MIL-DTL-38999 Series III
MIL-S-901 high impact shock: Grade A
Ingress protection: IP67
Water pressure: 6 feet, 48 hours

CONSTRUCTION

Contacts: size #8 and larger: high conductivity copper alloy, gold or silver plated.
Size #12, #16: copper alloy, gold plated
Shell: Aluminum or stainless steel, see How to Order
Insulator: Glass-filled thermoset epoxy
Wire grommet, face seal: Fluorosilicone/silicone blend
Contact Retention clip: Beryllium copper
Insert retainer ring: High-temperature thermoplastic
O-ring: Fluorosilicone

Jam Nut Receptacles

970-004 Jam Nut Receptacle with Accessory Thread

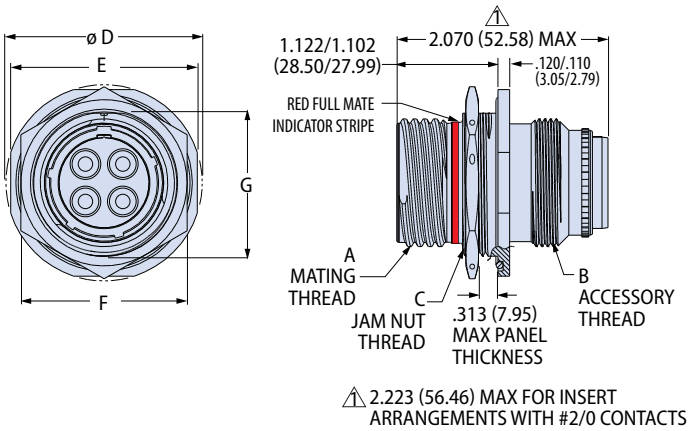

DIMENSIONS

Shell Size	A Mating Thd.	B Accessory Thd.	C Jam-Nut Thd.	ø D		E		F		G	
				In.	mm.	In.	mm.	In.	mm.	In.	mm.
18	1.125-.1P-.3L-TS-2A	1.125-18 UNEF-2A	1.250-18 UNEF-2A	1.733	44.02	1.639	41.63	1.438	36.53	1.212	30.78
20	1.250-.1P-.3L-TS-2A	1.250-18 UNEF-2A	1.4375-18 UNEF-2A	1.921	48.79	1.827	46.41	1.625	41.28	1.399	35.53
24	1.500-.1P-.3L-TS-2A	1.4375-18 UNEF-2A	1.625-18 UNEF-2A	2.108	53.54	2.014	51.16	1.822	46.28	1.587	40.31
28	1.750-.1P-.3L-TS-2A	1.8125-16 UN-2A	1.9375-16 UN-2A	2.425	61.60	2.327	59.11	2.188	55.58	1.899	48.23
32	2.000-.1P-.3L-TS-2A	2.0625-16 UNS-2A	2.125-16 UN-2A	2.607	66.24	2.513	63.83	2.375	60.33	2.084	52.93
36	2.250-.1P-.3L-TS-2A	2.250-16 UN-2A	2.375-16 UN-2A	2.857	72.57	2.763	70.18	2.625	66.68	2.323	59.00
40	2.500-.1P-.3L-TS-2A	2.500-16 UN-2A	2.625-16 UN-2A	3.107	78.92	3.013	76.53	2.875	73.03	2.548	64.72

KEY POSITIONS

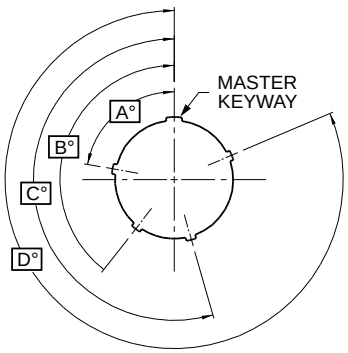

Position	A°	B°	C°	D°
1	80	142	196	293
2	135	170	200	310
3	49	169	200	244
4	66	140	200	257
5	62	145	180	280
6	79	153	197	272

PANEL CUTOUT

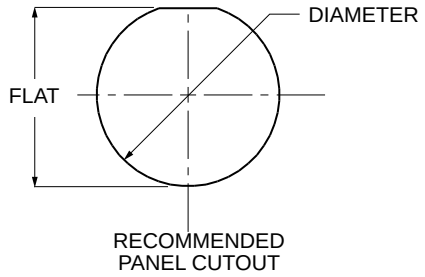

Shell Size	Diameter In. -0.0/+.010	Diameter mm. -0.0/+0.25	Flat In. -0.0/+.010	Flat mm. -0.0/+0.25
18	1.265	32.13	1.217	30.91
20	1.452	36.88	1.409	35.79
24	1.640	41.66	1.596	40.54
28	1.952	49.58	1.910	48.51
32	2.140	54.36	2.092	53.14
36	2.390	60.71	2.342	59.49
40	2.640	67.06	2.557	64.95

RECOMMENDED JAM NUT TORQUE

Shell Size	Min-Max (in-lb.)
18	80-85
20	100-110
24	110-120
28	145-155
32	170-180
36	190-200
40	210-220

© 2024 Glenair, Inc • 1211 Air Way, Glendale, CA 91201 • 818-247-6000 • www.glenair.com • U.S. CAGE code 06324 • Series 970 PowerTrip Connectors
Dimensions in Inches (millimeters) are subject to change without notice.

Jam Nut Receptacles

970-031 Jam Nut Receptacle with Banding Platform

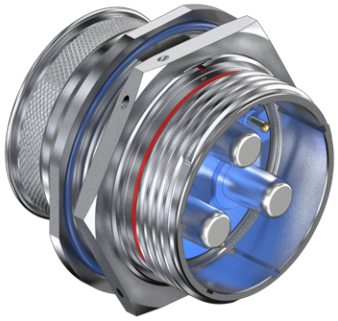

970-031 jam nut receptacle has integral banding platform. Terminate cable shield directly to connector with Band-Master ATS® banding strap, sold separately. Coupling threads are triple-start ACME quick-disconnect. EMI protected with ground spring on plug. Aluminum or stainless steel shell has five polarizing keyways. Crimp rear-release contacts are packaged with connector. PowerTrip connectors feature low resistance LouverBand contacts and are designed to withstand extreme environments.

- Quick-disconnect, high shock, high vibration, self-locking connector
- 2000 VAC (DWV)
- -65° to +200 °C
- Plug has EMI ground spring
- Crimp, rear-release contacts
- Advanced IP68+ sealing

INSERT ARRANGEMENTS

Insert Arr.	Contact Size and Quantity					
	#16	#12	#8	#4	#1/0	#2/0
18-2			2			
18-4		2	2			
20-3			3			
20-4			4			
20-5		2	3			
20-7	4		3			
24-1					1	
24-2				2		
24-3				3		
24-5			5			
24-6		4		2		
24-A1						1
24-A6		3		3		
28-12	6		6			
28-15	15					
28-4				4		
28-8		1	7			
28-9	5			4		
32-12	2		10			
32-2					2	
32-20	1	19				
32-3					3	
32-4				2	2	
32-5				5		
32-6		3			3	
32-7				7		
32-A22		22				
36-16	3		13			
36-2						2
36-4					4	
36-9	14	14	2	1		
36-A8				8		
36-B8	4				4	
40-10	16		9	4		
40-21			21			
40-5					5	

HOW TO ORDER

Sample Part Number → 970-031 TZ 36-4 P1 -1

Basic Part Number	970-031 Jam Nut Receptacle with Banding Platform
Material/Finish	ME = Aluminum / Electroless Nickel MT = Aluminum / Nickel PTFE NF = Aluminum / Olive Drab Cadmium TZ = Aluminum / Tin-Zinc ZR = Aluminum / Black Zinc-Nickel Z1 = Stainless Steel / Passivated
Shell Size-Insert Arr.	See "Insert Arrangements" Table
Contact Gender and Plating	A = Pin Connector, without Contacts B = Socket Connector, without Contacts P1 = Pin Contacts, Silver Plating* P2 = Pin Contacts, Gold Plating S1 = Socket Contacts, Silver Plating* S2 = Socket Contacts, Gold Plating * Size 12 and 16 contacts are gold-plated. Size 8, 4, 1/0 and 2/0 are silver plated.
Keyway Position	-1, -2, -3, -4, -5, or -6

RATINGS

Voltage (DWV): 2000 Volts AC
Current: Size 16 contact 13 amps
Size 12 contact 23 amps
Size 8 contact 60 amps
Size 4 contact 100 amps
Size 1/0 contact 175 amps
Size 2/0 contact 205 amps
Operating temperature:
Matl/Finish Codes ME, Z1: -65° to +200°C
Codes MT,NF, TZ, ZR: -65 to +175 °C
Durability: 500 mating cycles
EMI shielding effectiveness: 65 dB min. 100 MHz to 10 GHz
Shock: 50 g
Vibration: per MIL-DTL-38999 Series III
MIL-S-901 high impact shock: Grade A
Blowing sand and dust: MIL-STD-810, method 510.5
Altitude immersion: 75,000 feet
Ingress protection: IP67
Water pressure: 6 feet, 48 hours

CONSTRUCTION

Contacts: size #8 and larger: high conductivity copper alloy, gold or silver plated.
Size #12, #16: copper alloy, gold plated
Shell: Aluminum or stainless steel, see How to Order
Insulator: Glass-filled thermoset epoxy
Wire grommet, face seal: Fluorosilicone/silicone blend
Contact Retention clip: Beryllium copper
Insert retainer ring: High-temperature thermoplastic
O-ring: Fluorosilicone

RECOMMENDED JAM NUT TORQUE

Shell Size	Min-Max (in-lb.)	Shell Size	Min-Max (in-lb.)
18	80-85	32	170-180
20	100-110	36	190-200
24	110-120	40	210-220
28	145-155		

Jam Nut Receptacles

970-031 Jam Nut Receptacle with Banding Platform

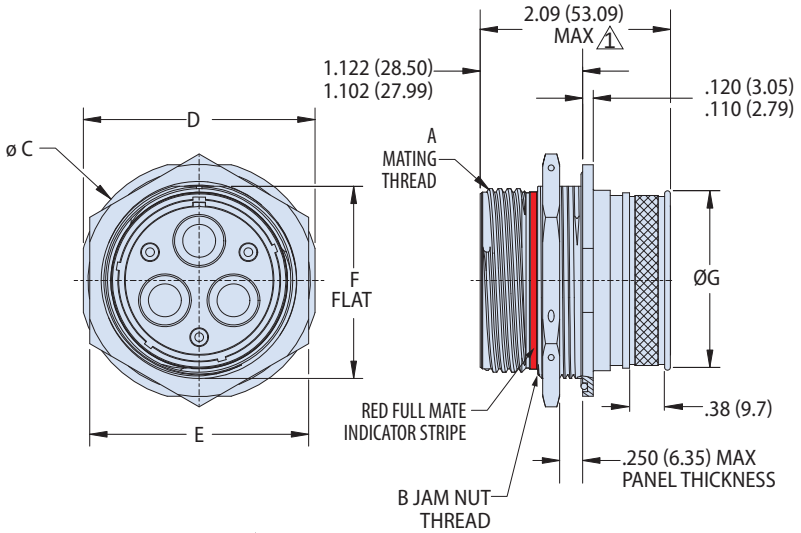

1 2.223 (56.46) MAX FOR INSERT ARRANGEMENTS WITH #2/0 CONTACTS. GROMMET PROTRUDES FROM SHELL.

DIMENSIONS

Shell Size	A Mating Thd	B Jam Nut Thd	ø C		D		E		F		ø G	
			In.	mm.	In.	mm.	In.	mm.	In.	mm.	In.	mm.
18	1.125-0.1P-0.3L-TS-2A	1.250-18UNEF-2A	1.733	44.02	1.639	41.63	1.438	36.53	1.212	30.78	1.037	26.34
20	1.250-0.1P-0.3L-TS-2A	1.4375-18UNEF-2A	1.921	48.79	1.827	46.41	1.625	41.28	1.399	35.53	1.163	29.54
24	1.500-0.1P-0.3L-TS-2A	1.625-18UNEF-2A	2.108	53.54	2.014	51.16	1.822	46.28	1.587	40.31	1.350	34.29
28	1.750-0.1P-0.3L-TS-2A	1.9375-16UN-2A	2.425	61.60	2.327	59.11	2.188	55.58	1.899	48.23	1.670	42.42
32	2.000-0.1P-0.3L-TS-2A	2.125-16UN-2A	2.607	66.22	2.513	63.83	2.375	60.33	2.084	52.93	1.945	49.40
36	2.250-0.1P-0.3L-TS-2A	2.375-16UN-2A	2.857	72.57	2.763	70.18	2.625	66.68	2.323	59.00	2.176	55.27
40	2.500-0.1P-0.3L-TS-2A	2.625-16UN-2A	3.107	78.92	3.013	76.53	2.875	73.03	2.548	64.72	2.350	59.69

SHIELD BAND

Shield band is not included with connector. Order separately.

Use banding strap to terminate cable braid directly to connector. Stainless steel band strap provides fast, cost-effective and highly reliable termination of braided metallic shielding. The Band-Master ATS® Advanced Cable Shield Termination System is the overwhelming favorite throughout the military aerospace and defense industries, providing excellent static loading and corrosion resistance in electrical wire interconnect systems.

Band Strap

Banding Tool
601-100

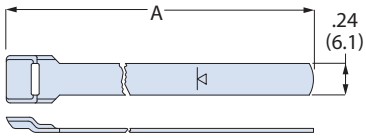

A Length		Fits up to Dia.		Band Strap (pre-coiled) Part Number
in	mm	in	mm	
14	355	1.80	45.7	601-041
18	457	2.50	63.5	601-050

KEY POSITIONS

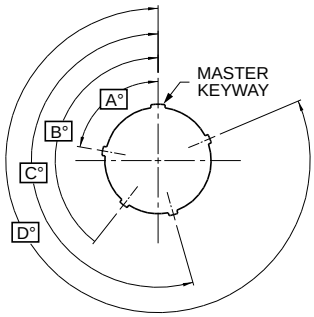

Position	A°	B°	C°	D°
1	80	142	196	293
2	135	170	200	310
3	49	169	200	244
4	66	140	200	257
5	62	145	180	280
6	79	153	197	272

PANEL CUTOUT

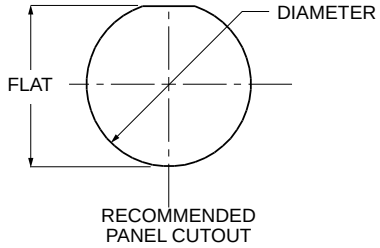

Shell Size	Diameter		Flat	
	In. -0.0/+.010	mm. -0.0/+0.25	In. -0.0/+.010	mm. -0.0/+0.25
18	1.265	32.13	1.217	30.91
20	1.452	36.88	1.409	35.79
24	1.640	41.66	1.596	40.54
28	1.952	49.58	1.910	48.51
32	2.140	54.36	2.092	53.14
36	2.390	60.71	2.342	59.49
40	2.640	67.06	2.557	64.95

SHRINK BOOT

Shrink boot,ordered separately, provides cable strain relief and environmental protection. Type 1 high-performance semi-rigid elastomer resists fuels and oils and withstands temperature extremes. Available with W1 hot melt adhesive pre-coat. Operating temperature range -75 to +150 °C (no adhesive), -55 to +125 °C (with W1 adhesive).

Shell Size	Shrink Boot P/N	Adhesive Lined Shrink Boot P/N
18	770-001S106	770-001S106W1
20	770-001S106	770-001S106W1
24	770-001S107	770-001S107W1
28	770-001S108	770-001S108W1
32	770-001S108	770-001S108W1
36	770-001S109	770-001S109W1
40	770-001S109	770-001S109W1

© 2024 Glenair, Inc • 1211 Air Way, Glendale, CA 91201 • 818-247-6000 • www.glenair.com • U.S. CAGE code 06324 • Series 970 PowerTrip Connectors
Dimensions in Inches (millimeters) are subject to change without notice.

POWER TRIP®

Jam Nut Receptacles

970-010 Low Profile Jam Nut Receptacle

970-010 jam nut receptacle has reduced rear length for use in limited clearance applications. The accessory threads are removed and the rear grommet is replaced with a thinner wire separator (not immersion rated). Coupling threads are triple-start ACME quick-disconnect. Crimp rear-release contacts are packaged with connector. PowerTrip connectors feature low resistance LouverBand contacts and are designed to withstand extreme environments.

- Quick-disconnect, high shock, high vibration, self-locking connector
- 2000 VAC (DWV)
- -65° to +200 °C
- Plug has EMI ground spring
- Crimp, rear-release contacts
- Advanced IP68+ sealing

INSERT ARRANGEMENTS

Insert Arr.	Contact Size and Quantity					
	#16	#12	#8	#4	#1/0	#2/0
18-2			2			
18-4		2	2			
20-3			3			
20-4			4			
20-5		2	3			
20-7	4		3			
24-1					1	
24-2				2		
24-3				3		
24-5			5			
24-6		4		2		
24-A1						1
24-A6		3		3		
28-12	6		6			
28-15	15					
28-4				4		
28-8		1	7			
28-9	5			4		
32-12	2		10			
32-2					2	
32-20	1	19				
32-3					3	
32-4				2	2	
32-5				5		
32-6		3			3	
32-7				7		
32-A22		22				
36-16	3		13			
36-2						2
36-4					4	
36-9	14	14	2	1		
36-A8				8		
36-B8	4				4	
40-10	16		9	4		
40-21			21			
40-5					5	

HOW TO ORDER

Sample Part Number → 970-010 ME 32-2 S1 -1

Basic Part Number	970-010 Jam Nut Receptacle, Box Mount
Material/Finish	ME = Aluminum / Electroless Nickel MT = Aluminum / Nickel PTFE NF = Aluminum / Olive Drab Cadmium TZ = Aluminum / Tin-Zinc ZR = Aluminum / Black Zinc-Nickel Z1 = Stainless Steel / Passivated
Shell Size-Insert Arr.	See "Insert Arrangements" Table
Contact Gender and Plating	A = Pin Connector, without Contacts B = Socket Connector, without Contacts P1 = Pin Contacts, Silver Plating* P2 = Pin Contacts, Gold Plating S1 = Socket Contacts, Silver Plating* S2 = Socket Contacts, Gold Plating * Size 12 and 16 contacts are gold-plated. Size 8, 4, 1/0 and 2/0 are silver plated.
Keyway Position	-1, -2, -3, -4, -5, or -6

RATINGS

Voltage (DWV): 2000 Volts AC
Current: Size 16 contact 13 amps
Size 12 contact 23 amps
Size 8 contact 60 amps
Size 4 contact 100 amps
Size 1/0 contact 175 amps
Size 2/0 contact 205 amps
Operating temperature:
Matl/Finish Codes ME, Z1: -65° to +200°C
Codes MT,NF, TZ, ZR: -65 to +175 °C
Durability: 500 mating cycles
EMI shielding effectiveness: 65 dB min. 100 MHz to 10 GHz
Shock: 50 g
Vibration: per MIL-DTL-38999 Series III
MIL-S-901 high impact shock: Grade A
Blowing sand and dust: MIL-STD-810, method 510.5
Altitude immersion: not rated
Ingress protection: not rated
Water pressure: not rated

CONSTRUCTION

Contacts: size #8 and larger: high conductivity copper alloy, gold or silver plated.
Size #12, #16: copper alloy, gold plated
Shell: Aluminum or stainless steel, see How to Order
Insulator: Glass-filled thermoset epoxy
Wire separator, face seal: Fluorosilicone/silicone blend
Contact Retention clip: Beryllium copper
Insert retainer ring: High-temperature thermoplastic
O-ring: Fluorosilicone

Jam Nut Receptacles

970-010 Low Profile Jam Nut Receptacle

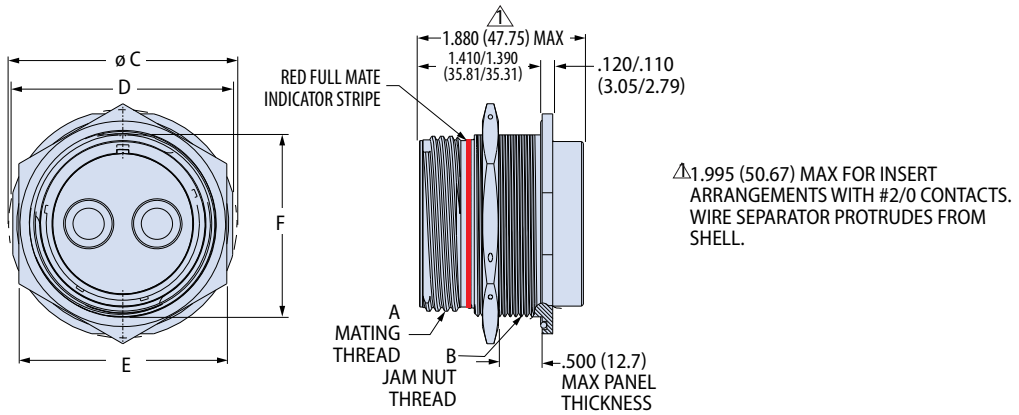

DIMENSIONS

Shell Size	A Mating Thd.	B Jam-Nut Thd.	ø C		D		E		F	
			In.	mm.	In.	mm.	In.	mm.	In.	mm.
18	1.125-.1P-.3L-TS-2A	1.250-18 UNEF-2A	1.733	44.02	1.639	41.63	1.438	36.53	1.212	30.78
20	1.250-.1P-.3L-TS-2A	1.4375-18 UNEF-2A	1.921	48.79	1.827	46.41	1.625	41.28	1.399	35.53
24	1.500-.1P-.3L-TS-2A	1.625-18 UNEF-2A	2.108	53.54	2.014	51.16	1.822	46.28	1.587	40.31
28	1.750-.1P-.3L-TS-2A	1.9375-16 UN-2A	2.425	61.60	2.327	59.11	2.188	55.58	1.899	48.23
32	2.000-.1P-.3L-TS-2A	2.125-16 UN-2A	2.607	66.24	2.513	63.83	2.375	60.33	2.084	52.93
36	2.250-.1P-.3L-TS-2A	2.375-16 UN-2A	2.857	72.57	2.763	70.18	2.625	66.68	2.323	59.00
40	2.500-.1P-.3L-TS-2A	2.625-16 UN-2A	3.107	78.92	3.013	76.53	2.875	73.03	2.548	64.72

KEY POSITIONS

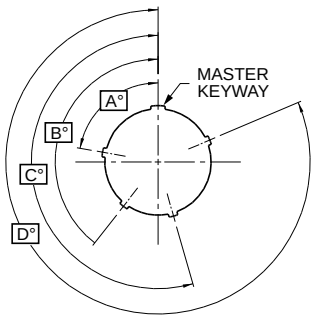

Position	A°	B°	C°	D°
1	80	142	196	293
2	135	170	200	310
3	49	169	200	244
4	66	140	200	257
5	62	145	180	280
6	79	153	197	272

PANEL CUTOUT

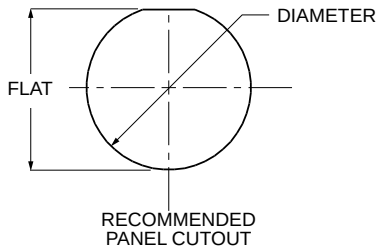

Shell Size	Diameter In. -0.0/+.010	Diameter mm. -0.0/+0.25	Flat In. -0.0/+.010	Flat mm. -0.0/+0.25
18	1.265	32.13	1.217	30.91
20	1.452	36.88	1.409	35.79
24	1.640	41.66	1.596	40.54
28	1.952	49.58	1.910	48.51
32	2.140	54.36	2.092	53.14
36	2.390	60.71	2.342	59.49
40	2.640	67.06	2.557	64.95

RECOMMENDED JAM NUT TORQUE

Shell Size	Min-Max (in-lb.)
18	80-85
20	100-110
24	110-120
28	145-155
32	170-180
36	190-200
40	210-220

© 2024 Glenair, Inc • 1211 Air Way, Glendale, CA 91201 • 818-247-6000 • www.glenair.com • U.S. CAGE code 06324 • Series 970 PowerTrip Connectors
Dimensions in Inches (millimeters) are subject to change without notice.

POWER TRIP®

Jam Nut Receptacles

970-006 Bulkhead Feed-Thru Jam Nut Receptacle

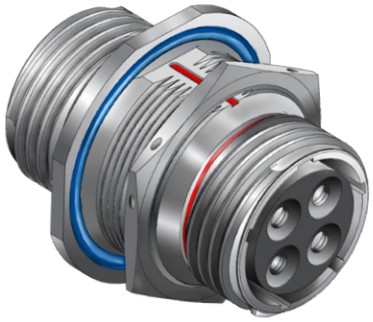

970-006 bulkhead feed-thru jam nut receptacle has pin contacts on one side and socket contacts on the other side. Mount to bulkhead and attach mating plug connectors to both sides. Aluminum or stainless steel shell has five polarizing keyways. Coupling threads are triple-start ACME type. Contacts are factory-installed and are not removable. PowerTrip connectors feature low resistance LouverBand contacts and are designed to withstand extreme environments.

- **Quick-disconnect, high shock, high vibration, self-locking connector**
- **2000 VAC (DWV)**
- **-65° to +200 °C**
- **Plug has EMI ground spring**
- **Crimp, rear-release contacts**
- **Advanced IP68+ sealing**

INSERT ARRANGEMENTS

Insert Arr.	Contact Size and Quantity					
	#16	#12	#8	#4	#1/0	#2/0
18-2			2			
18-4		2	2			
20-3			3			
20-4			4			
20-5		2	3			
20-7	4		3			
24-1					1	
24-2				2		
24-3				3		
24-5			5			
24-6		4		2		
24-A1						1
24-A6		3		3		
28-12	6		6			
28-15	15					
28-4				4		
28-8		1	7			
28-9	5			4		
32-12	2		10			
32-2					2	
32-20	1	19				
32-3					3	
32-4				2	2	
32-5				5		
32-6		3			3	
32-7				7		
32-A22		22				
36-16	3		13			
36-2						2
36-4					4	
36-9	14	14	2	1		
36-A8				8		
36-B8	4				4	
40-10	16		9	4		
40-21			21			
40-5					5	

HOW TO ORDER

Sample Part Number →	970-006	ME	32-2	P	2		-1

Basic Part Number	**970-006** Feedthrough Bulkhead Jam Nut Receptacle
Material/Finish	**ME** = Aluminum / Electroless Nickel **MT** = Aluminum / Nickel PTFE **NF** = Aluminum / Olive Drab Cadmium **TZ** = Aluminum / Tin-Zinc **ZR** = Aluminum / Black Zinc-Nickel **Z1** = Stainless Steel / Passivated
Shell Size-Insert Arr.	See "Insert Arrangements" Table
Contact Designator	**P** = Pin Contacts on Jam Nut Side (sockets opposite) **S** = Socket Contacts on Jam Nut Side (pins opposite)
Contact Plating	**1** = Silver* **2** = Gold * Size 8, 4, 1/0 and 2/0 are silver plated. Size 12 and 16 contacts are gold-plated.
Panel Thickness	**Omit** = .50 (12.7) max panel thickness **B** = .95 (24.1) max panel thickness **C** = 1.40 (35.6) max panel thickness
Keyway Position	**-1**, **-2**, **-3**, **-4**, **-5**, or **-6**

RATINGS

Voltage (DWV): 2000 Volts AC
Current: Size 16 contact 13 amps
Size 12 contact 23 amps
Size 8 contact 60 amps
Size 4 contact 100 amps
Size 1/0 contact 175 amps
Size 2/0 contact 205 amps
Operating temperature:
Matl/Finish Codes ME, Z1: -65° to +200°C
Codes MT,NF, TZ, ZR: -65 to +175 °C
Durability: 500 mating cycles
EMI shielding effectiveness: 65 dB min. 100 MHz to 10 GHz
Shock: 50 g
Vibration: per MIL-DTL-38999 Series III
MIL-S-901 high impact shock: Grade A
Altitude immersion: 75,000 feet
Ingress protection: IP67
Water pressure: 6 feet, 48 hours

CONSTRUCTION

Contacts: size #8 and larger: high conductivity copper alloy, gold or silver plated.
Size #12, #16: copper alloy, gold plated
Shell, jam nut: Aluminum or stainless steel, see How to Order
Insulator: Glass-filled thermoset epoxy
Face seal: Fluorosilicone
O-ring: Fluorosilicone

Jam Nut Receptacles

970-006 Jam Nut Feed-Thru Receptacle

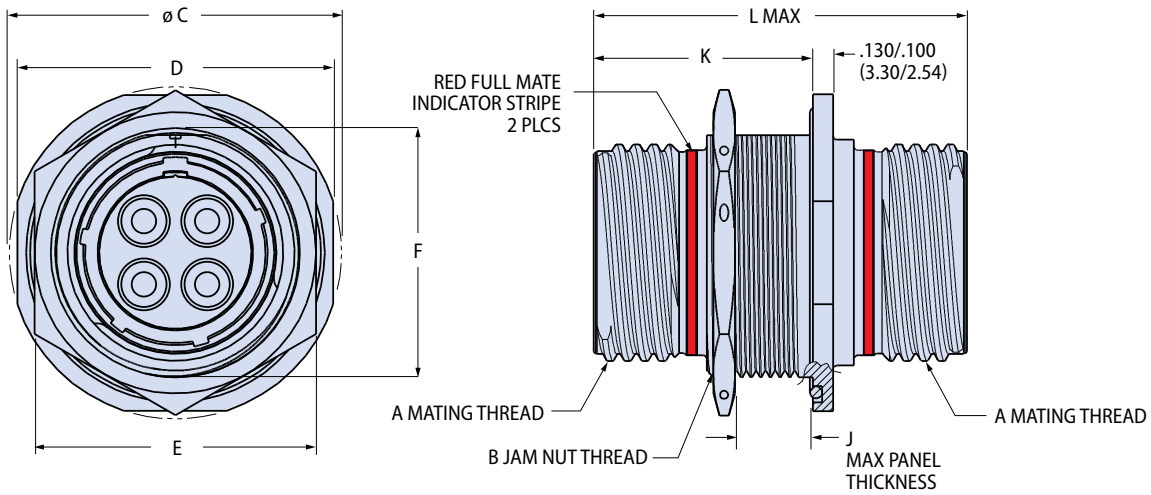

DIMENSIONS										
Shell Size	A Mating Thd.	B Jam-Nut Thd.	ø C		D		E		F	
			In.	mm.	In.	mm.	In.	mm.	In.	mm.
18	1.125-.1P-.3L-TS-2A	1.250-18 UNEF-2A	1.733	44.02	1.639	41.63	1.438	36.53	1.212	30.78
20	1.250-.1P-.3L-TS-2A	1.4375-18 UNEF-2A	1.921	48.79	1.827	46.41	1.625	41.28	1.399	35.53
24	1.500-.1P-.3L-TS-2A	1.625-18 UNEF-2A	2.108	53.54	2.014	51.16	1.822	46.28	1.587	40.31
28	1.750-.1P-.3L-TS-2A	1.9375-16 UN-2A	2.425	61.60	2.327	59.11	2.188	55.58	1.899	48.23
32	2.000-.1P-.3L-TS-2A	2.125-16 UN-2A	2.607	66.24	2.513	63.86	2.375	60.33	2.084	53.01
36	2.250-.1P-.3L-TS-2A	2.375-16 UN-2A	2.857	72.57	2.763	70.18	2.625	66.68	2.323	59.00
40	2.500-.1P-.3L-TS-2A	2.625-16 UN-2A	3.107	78.92	3.013	76.53	2.875	73.03	2.548	64.72

PANEL THICKNESS DIMENSIONS						
Panel Thickness Option	J Max		K Max		L Max	
	In.	mm.	In.	mm.	In.	mm.
No Designator	.500	12.7	1.328	33.7	2.260	57.4
B	.950	24.1	1.801	45.7	2.739	69.6
C	1.400	35.6	2.274	57.8	3.215	81.7

KEY POSITIONS

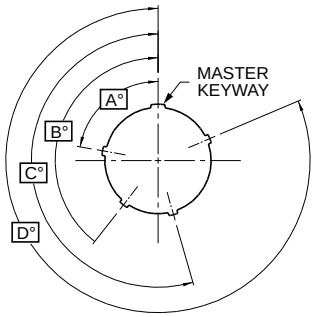

Position	A°	B°	C°	D°
1	80	142	196	293
2	135	170	200	310
3	49	169	200	244
4	66	140	200	257
5	62	145	180	280
6	79	153	197	272

PANEL CUTOUT

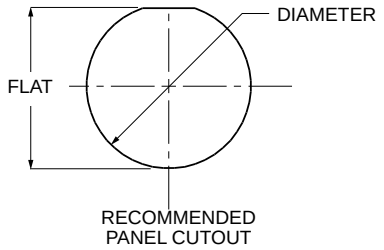

Shell Size	Diameter		Flat	
	In. -0.0/+.010	mm. -0.0/+0.25	In. -0.0/+.010	mm. -0.0/+0.25
18	1.265	32.13	1.217	30.91
20	1.452	36.88	1.409	35.79
24	1.640	41.66	1.596	40.54
28	1.952	49.58	1.910	48.51
32	2.140	54.36	2.092	53.14
36	2.390	60.71	2.342	59.49
40	2.640	67.06	2.557	64.95

RECOMMENDED JAM NUT TORQUE

Shell Size	Min-Max (in-lb.)
18	80-85
20	100-110
24	110-120
28	145-155
32	170-180
36	190-200
40	210-220

© 2024 Glenair, Inc • 1211 Air Way, Glendale, CA 91201 • 818-247-6000 • www.glenair.com • U.S. CAGE code 06324 • Series 970 PowerTrip Connectors
Dimensions in Inches (millimeters) are subject to change without notice.

Jam Nut Receptacles
970-039 Blind Mate with Crimp Rear Release

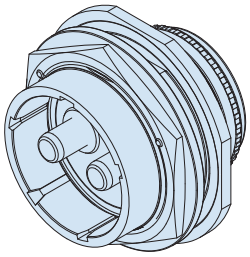

970-039 blind mate jam nut receptacle with crimp rear release has pin contacts on one side and socket contacts on the other side. PowerTrip connectors feature low resistance LouverBand contacts and are designed to withstand extreme environments.

- Quick-disconnect, high shock, high vibration, self-locking connector
- 2000 VAC (DWV)
- -65° to +200 °C
- Plug has EMI ground spring
- Crimp, rear-release contacts
- Advanced IP68+ sealing

INSERT ARRANGEMENTS

Insert Arr.	Contact Size and Quantity					
	#16	#12	#8	#4	#1/0	#2/0
18-2			2			
18-4		2	2			
20-3			3			
20-4			4			
20-5		2	3			
20-7	4		3			
24-1					1	
24-2				2		
24-3				3		
24-5			5			
24-6		4		2		
24-A1						1
24-A6		3		3		
28-12	6		6			
28-15	15					
28-4				4		
28-8		1	7			
28-9	5			4		
32-12	2		10			
32-2					2	
32-20	1	19				
32-3					3	
32-4				2	2	
32-5				5		
32-6		3			3	
32-7				7		
32-A22		22				
36-16	3		13			
36-2						2
36-4					4	
36-9	14	14	2	1		
36-A8				8		
36-B8	4				4	
40-10	16		9	4		
40-21			21			
40-5					5	

HOW TO ORDER

Sample Part Number →	970-039	MT	32-2	P	1	A	-1

Basic Part Number	**970-039** Blind Mate Jam Nut Receptacle with Crimp Rear Release
Material/Finish	**ME** = Aluminum / Electroless Nickel **MT** = Aluminum / Nickel PTFE **NF** = Aluminum / Olive Drab Cadmium **ZR** = Aluminum / Black Zinc-Nickel **Z1** = Stainless Steel / Passivated **ZMT** = Stainless Steel / Nickel PTFE
Shell Size-Insert Arr.	See "Insert Arrangements" Table
Contact Designator	**P** = Pin Contact **S** = Socket Contact **A** = Pin Connector, Less Contacts **B** = Socket Connector, Less Contacts
Contact Plating	**1** = Silver - Size 8, 4, 0, and 2/0 Only **2** = Gold
Shell Style	**A** = Accessory Thread **B** = Banding Platform
Keyway Position	**-1**, **-2**, **-3**, **-4**, **-5**, or **-6**

RATINGS

Voltage (DWV): 2000 Volts AC
Current: Size 16 contact 13 amps
Size 12 contact 23 amps
Size 8 contact 60 amps
Size 4 contact 100 amps
Size 1/0 contact 175 amps
Size 2/0 contact 205 amps
Operating temperature:
Matl/Finish Codes ME, Z1: -65° to +200°C
Codes MT, NF, ZR: -65 to +175 °C
Durability: 500 mating cycles
EMI shielding effectiveness: 65 dB min. 100 MHz to 10 GHz
Shock: 50 g
Vibration: per MIL-DTL-38999 Series III
MIL-S-901 high impact shock: Grade A
Altitude immersion: 75,000 feet
Ingress protection: IP67
Water pressure: 6 feet, 48 hours

CONSTRUCTION

Contacts: Copper alloy, see How to Order.
Shell, jam nut: Aluminum or stainless steel, see How to Order
Insulator: High grade rigid dielectric
Seals: Fluorosilicone
O-ring: Fluorosilicone
Washer: PTFE

Jam Nut Receptacles
970-039 Blind Mate with Crimp Rear Release

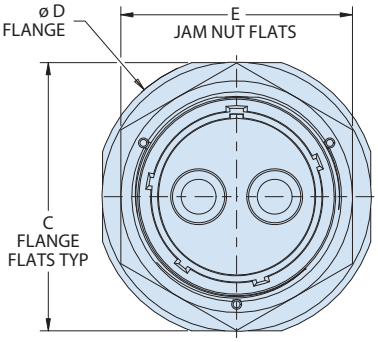

SCALE 1.500

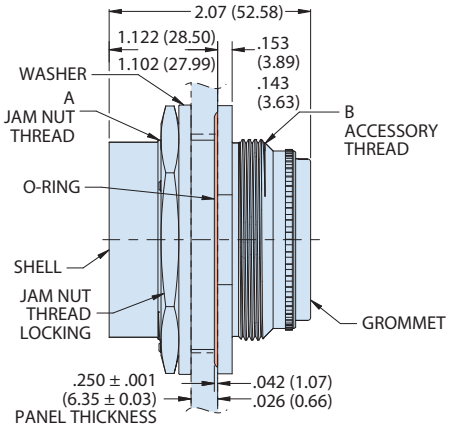

ACCESSORY THREAD SHELL STYLE "A"

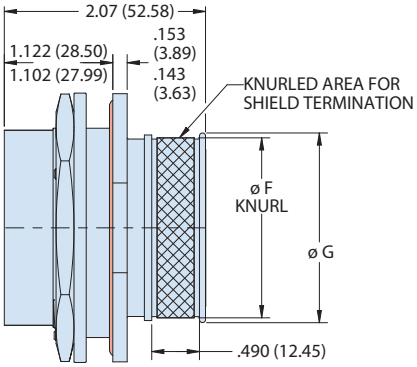

BANDING PLATFORM SHELL STYLE "B"

DIMENSIONS

Shell Size	A Jam Nut Thread	B Accessory Thread	C		ø D		E		ø F		ø G	
			In.	mm.	In.	mm.	In.	mm.	In.	mm.	In.	mm.
18	1.250-18UNEF-2A	1.125-18UNEF-2A	1.875	47.63	2.025	51.43	1.438	36.53	.937	23.80	1.037	26.34
20	1.4375-18UNEF-2A	1.250-18UNEF-2A	2.125	53.97	2.275	57.79	1.625	41.28	1.063	27.00	1.163	29.54
24	1.625-18UNEF-2A	1.4375-18UNEF-2A	2.250	57.15	2.400	60.96	1.822	46.28	1.250	31.75	1.350	34.29
28	1.9375-16UN-2A	1.8125-16UN-2A	2.625	66.68	2.775	70.49	2.188	55.58	1.580	40.13	1.670	42.42
32	2.125-16UN-2A	2.0625-16UNS-2A	2.750	69.85	2.900	73.66	2.375	60.33	1.845	46.86	1.945	49.40
36	2.375-16UN-2A	2.250-16UN-2A	3.000	76.20	3.150	80.01	2.625	66.68	2.057	52.25	2.176	55.27
40	2.625-16UN-2A	2.500-16UN-2A	3.250	82.55	3.400	86.36	2.875	73.02	2.285	58.04	2.390	60.71

PANEL OPENING

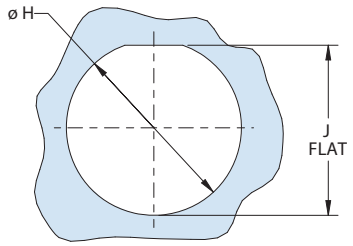

Shell Size	ø H +.010 -.000	J +.010 -.000
18	1.425 (36.20)	1.325 (33.65)
20	1.613 (40.97)	1.513 (38.43)
24	1.800 (45.72)	1.700 (43.18)
28	2.113 (53.67)	2.013 (51.13)
32	2.300 (58.42)	2.200 (55.88)
36	2.550 (64.77)	2.450 (62.23)
40	2.800 (71.12)	2.700 (68.58)

KEY POSITIONS

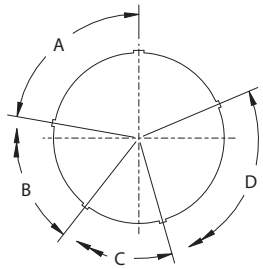

Position	A°	B°	C°	D°
1	80	142	196	293
2	135	170	200	310
3	49	169	200	244
4	66	140	200	257
5	62	145	180	280
6	79	153	197	272

© 2024 Glenair, Inc • 1211 Air Way, Glendale, CA 91201 • 818-247-6000 • www.glenair.com • U.S. CAGE code 06324 • Series 970 PowerTrip Connectors
Dimensions in Inches (millimeters) are subject to change without notice.

Jam Nut Plugs
970-040 Blind Mate with Crimp Rear Release

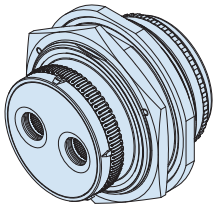

970-040 blind mate jam nut plug with crimp rear release has pin contacts on one side and socket contacts on the other side. PowerTrip connectors feature low resistance LouverBand contacts and are designed to withstand extreme environments.

- Quick-disconnect, high shock, high vibration, self-locking connector
- 2000 VAC (DWV)
- -65° to +200 °C
- Plug has EMI ground spring
- Crimp, rear-release contacts
- Advanced IP68+ sealing

INSERT ARRANGEMENTS

Insert Arr.	Contact Size and Quantity					
	#16	#12	#8	#4	#1/0	#2/0
18-2			2			
18-4		2	2			
20-3			3			
20-4			4			
20-5		2	3			
20-7	4		3			
24-1					1	
24-2				2		
24-3				3		
24-5			5			
24-6		4		2		
24-A1						1
24-A6		3		3		
28-12	6		6			
28-15	15					
28-4				4		
28-8		1	7			
28-9	5			4		
32-12	2		10			
32-2					2	
32-20	1	19				
32-3					3	
32-4				2	2	
32-5				5		
32-6		3			3	
32-7				7		
32-A22		22				
36-16	3		13			
36-2						2
36-4					4	
36-9	14	14	2	1		
36-A8				8		
36-B8	4				4	
40-10	16		9	4		
40-21			21			
40-5					5	

HOW TO ORDER

Sample Part Number →	970-040	MT	32-2	S	1	A	-1

Basic Part Number	**970-040** Blind Mate Jam Nut Plug with Crimp Rear Release
Material/Finish	**ME** = Aluminum / Electroless Nickel **MT** = Aluminum / Nickel PTFE **NF** = Aluminum / Olive Drab Cadmium **ZR** = Aluminum / Black Zinc-Nickel **Z1** = Stainless Steel / Passivated **ZMT** = Stainless Steel / Nickel PTFE
Shell Size-Insert Arr.	See "Insert Arrangements" Table
Contact Designator	**P** = Pin Contact **S** = Socket Contact **A** = Pin Connector, Less Contacts **B** = Socket Connector, Less Contacts
Contact Plating	**1** = Silver - Size 8, 4, 0, and 2/0 Only **2** = Gold
Shell Style	**A** = Accessory Thread **B** = Banding Platform
Keyway Position	**-1**, **-2**, **-3**, **-4**, **-5**, or **-6**

RATINGS

Voltage (DWV): 2000 Volts AC
Current: Size 16 contact 13 amps
Size 12 contact 23 amps
Size 8 contact 60 amps
Size 4 contact 100 amps
Size 1/0 contact 175 amps
Size 2/0 contact 205 amps
Operating temperature:
Matl/Finish Codes ME, Z1: -65° to +200°C
Codes MT, NF, ZR: -65 to +175 °C
Durability: 500 mating cycles
EMI shielding effectiveness: 65 dB min. 100 MHz to 10 GHz
Shock: 50 g
Vibration: per MIL-DTL-38999 Series III
MIL-S-901 high impact shock: Grade A
Altitude immersion: 75,000 feet
Ingress protection: IP67
Water pressure: 6 feet, 48 hours

CONSTRUCTION

Contacts: Copper alloy, see How to Order.
Shell, jam nut: Aluminum or stainless steel, see How to Order
Insulator: High grade rigid dielectric
Seals: Fluorosilicone
O-ring: Fluorosilicone
Washer: PTFE

© 2024 Glenair, Inc • 1211 Air Way, Glendale, CA 91201 • 818-247-6000 • www.glenair.com • U.S. CAGE code 06324 • Series 970 PowerTrip Connectors
Dimensions in Inches (millimeters) are subject to change without notice.

Rev. 05.20.25

Jam Nut Plugs

970-040 Blind Mate with Crimp Rear Release

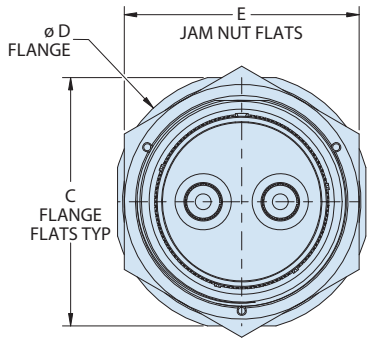

SCALE 1.500

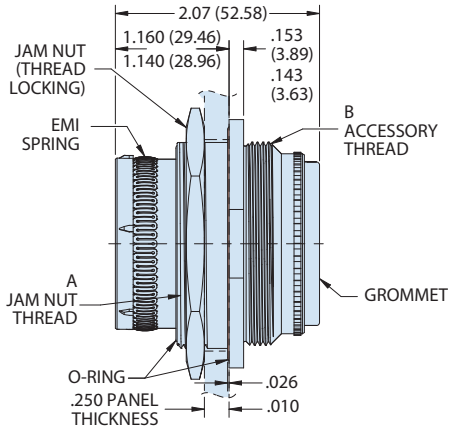

ACCESSORY THREAD
SHELL STYLE "A"

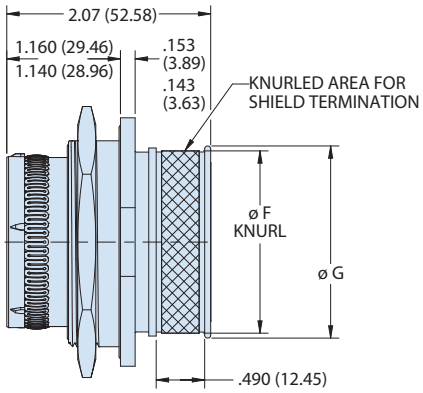

BANDING PLATFORM
SHELL STYLE "B"

DIMENSIONS

Shell Size	A Jam Nut Thread	B Accessory Thread	C In.	C mm.	ø D In.	ø D mm.	E In.	E mm.	ø F In.	ø F mm.	ø G In.	ø G mm.
18	1.250-18UNEF-2A	1.125-18UNEF-2A	1.639	41.63	1.733	44.02	1.438	36.53	.937	23.80	1.037	26.34
20	1.4375-18UNEF-2A	1.250-18UNEF-2A	1.827	46.41	1.921	48.79	1.625	41.28	1.063	27.00	1.163	29.54
24	1.625-18UNEF-2A	1.4375-18UNEF-2A	2.014	51.16	2.108	53.54	1.822	46.28	1.250	31.75	1.350	34.29
28	1.9375-16UN-2A	1.8125-16UN-2A	2.327	59.11	2.425	61.59	2.188	55.58	1.580	40.13	1.670	42.42
32	2.125-16UN-2A	2.0625-16UNS-2A	2.513	63.83	2.607	66.22	2.375	60.33	1.845	46.86	1.945	49.40
36	2.375-16UN-2A	2.250-16UN-2A	2.763	70.18	2.857	72.57	2.625	66.68	2.057	52.25	2.176	55.27
40	2.625-16UN-2A	2.500-16UN-2A	3.013	76.53	3.107	78.92	2.875	73.02	2.285	58.04	2.390	60.71

PANEL OPENING

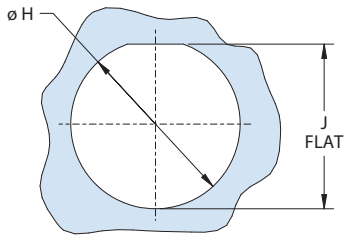

Shell Size	ø H +.010 -.000 In.	ø H +.010 -.000 mm.	J +.010 -.000 In.	J +.010 -.000 mm.
18	1.265	32.13	1.217	30.91
20	1.452	36.88	1.409	35.79
24	1.640	41.66	1.596	40.54
28	1.952	49.58	1.910	48.51
32	2.140	54.36	2.092	53.14
36	2.390	60.71	2.342	59.49
40	2.640	67.06	2.557	64.95

KEY POSITIONS

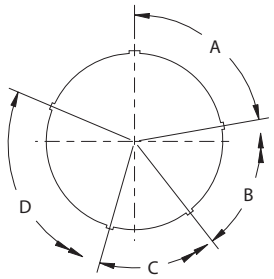

Position	A°	B°	C°	D°
1	80	142	196	293
2	135	170	200	310
3	49	169	200	244
4	66	140	200	257
5	62	145	180	280
6	79	153	197	272

© 2024 Glenair, Inc • 1211 Air Way, Glendale, CA 91201 • 818-247-6000 • www.glenair.com • U.S. CAGE code 06324 • Series 970 PowerTrip Connectors
Dimensions in Inches (millimeters) are subject to change without notice.

POWER TRIP®

Wall Mount Receptacle
970-047 Blind Mate with Crimp Rear Release

970-047 blind mate wall mount receptacle with crimp rear release has pin contacts on one side and socket contacts on the other side. PowerTrip connectors feature low resistance LouverBand contacts and are designed to withstand extreme environments.

- Quick-disconnect, high shock, high vibration, self-locking connector
- 2000 VAC (DWV)
- -65° to +200 °C
- Plug has EMI ground spring
- Crimp, rear-release contacts
- Advanced IP68+ sealing

INSERT ARRANGEMENTS

Insert Arr.	Contact Size and Quantity					
	#16	#12	#8	#4	#1/0	#2/0
18-2			2			
18-4		2	2			
20-3			3			
20-4			4			
20-5		2	3			
20-7	4		3			
24-1					1	
24-2				2		
24-3				3		
24-5			5			
24-6		4		2		
24-A1						1
24-A6		3		3		
28-12	6		6			
28-15	15					
28-4				4		
28-8		1	7			
28-9	5			4		
32-12	2		10			
32-2					2	
32-20	1	19				
32-3					3	
32-4				2	2	
32-5				5		
32-6		3			3	
32-7				7		
32-A22		22				
36-16	3		13			
36-2						2
36-4					4	
36-9	14	14	2	1		
36-A8				8		
36-B8	4				4	
40-10	16		9	4		
40-21			21			
40-5					5	

HOW TO ORDER

Sample Part Number → 970-047 Z1 32-2 S 1 N -1

Basic Part Number	**970-047** Blind Mate Wall Mount Receptacle
Material/Finish	**ME** = Aluminum / Electroless Nickel **MT** = Aluminum / Nickel PTFE **NF** = Aluminum / Olive Drab Cadmium **ZR** = Aluminum / Black Zinc-Nickel **Z1** = Stainless Steel / Passivated **ZMT** = Stainless Steel / Nickel PTFE
Shell Size-Insert Arr.	See "Insert Arrangements" Table
Contact Type	**P** = Pin Contact **S** = Socket Contact **A** = Pin Connector, Less Contacts **B** = Socket Connector, Less Contacts
Contact Plating	**1** = Silver (Size 8, 4, 0, and 2/0 only) **2** = Gold
Mounting Hole Option	**N** = Thru-Hole **T** = Threaded - Clinch Nuts, Self Locking per NASM45938/7 (Not available with stainless steel shells)
Keyway Position	**-1**, **-2**, **-3**, **-4**, **-5**, or **-6** (See Table II)

RATINGS

Voltage (DWV): 2000 Volts AC
Current: Size 16 contact 13 amps
Size 12 contact 23 amps
Size 8 contact 60 amps
Size 4 contact 100 amps
Size 1/0 contact 175 amps
Size 2/0 contact 205 amps
Operating temperature:
Matl/Finish Codes ME, Z1: -65° to +200°C
Codes MT, NF, ZR: -65 to +175 °C
Durability: 500 mating cycles
EMI shielding effectiveness: 65 dB min. 100 MHz to 10 GHz
Shock: 50 g
Vibration: per MIL-DTL-38999 Series III
MIL-S-901 high impact shock: Grade A
Altitude immersion: 75,000 feet
Ingress protection: IP67
Water pressure: 6 feet, 48 hours

CONSTRUCTION

Contacts: Copper alloy, see How to Order.
Shell, jam nut: Aluminum or stainless steel, see How to Order
Insulator: High grade rigid dielectric
Seals: Fluorosilicone
O-ring: Fluorosilicone
Washer: PTFE

Wall Mount Receptacle
970-047 Blind Mate with Crimp Rear Release

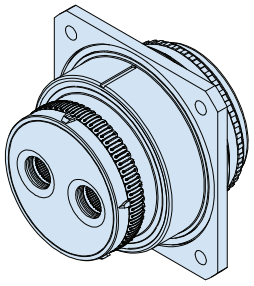

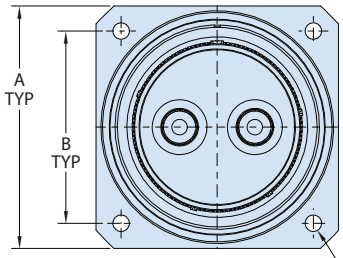

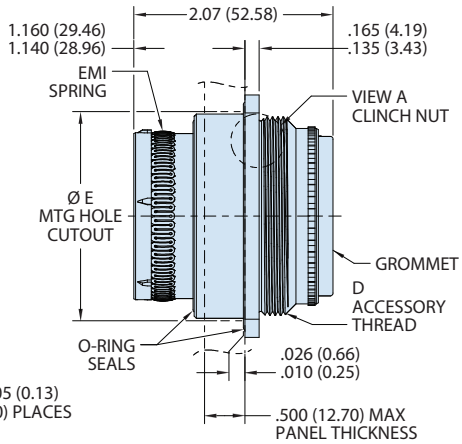

CLINCH NUT PER MOUNTING HOLE OPTION "T" IN PART NUMBER DEVELOPMENT. SEE "C THREADED" FOR THREAD SIZE. NOT AVAILABLE WITH STAINLESS STEEL SHELLS.

VIEW A

CONNECTOR DIMENSIONS

Shell Size	A	B Basic	C Thru	C Threaded	D Accessory Thread	Mtg Holes E +.010 -.000
18	1.639	1.275	0.146	#6-32UNC-2B	1.125-18UNEF-2A	1.265
20	1.827	1.408			1.250-18UNEF-2A	1.452
24	2.014	1.585			1.4375-18UNEF-2A	1.640
28	2.327	1.905	0.170	#8-32UNC-2B	1.8125-16UN-2A	1.952
32	2.513	1.993			2.0625-16UNS-2A	2.140
36	2.763	2.181			2.250-16UN-2A	2.390
40	3.013	2.347			2.500-16UN-2A	2.640

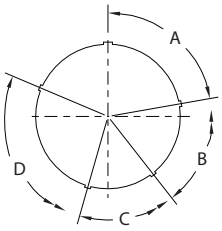

POLARIZING KEYS

TABLE II - POLARIZING POSITIONS

NO.	A	B	C	D
1	80	142	196	293
2	135	170	200	310
3	49	169	200	244
4	66	140	200	257
5	62	145	180	280
6	79	153	197	272

TABLE III

Contact Size	Max Current
16	13
12	23
8	60
4	100
1/0	175
2/0	205

© 2024 Glenair, Inc • 1211 Air Way, Glendale, CA 91201 • 818-247-6000 • www.glenair.com • U.S. CAGE code 06324 • Series 970 PowerTrip Connectors
Dimensions in Inches (millimeters) are subject to change without notice.

Hermetic Receptacles

970-012 Hermetic Square Flange Receptacle

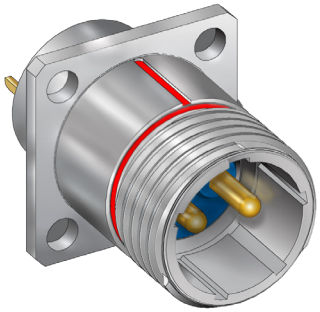

970-012 hermetic receptacle has stainless steel shell, fused glass insulator and iron-nickel alloy contacts. Contacts are three types: solder cup, bus bar or lug termination. Coupling threads are triple-start ACME quick-disconnect. PowerTrip connectors feature low resistance LouverBand contacts and are designed to withstand extreme environments.

- Quick-disconnect self-locking aerospace-grade power connector
- 2000 VAC (DWV)
- -65° to +200°C
- Fused glass hermetic seal
- High shock, high vibration

INSERT ARRANGEMENTS

Insert Arr.	Contact Size and Quantity					
	#16	#12	#8	#4	#1/0	#2/0
18-2			2			
18-4		2	2			
20-3			3			
20-4			4			
20-5		2	3			
20-7	4		3			
24-1					1	
24-2				2		
24-3				3		
24-5			5			
24-6		4		2		
24-A1						1
24-A6		3		3		
28-12	6		6			
28-15	15					
28-4				4		
28-8		1	7			
28-9	5			4		
32-12	2		10			
32-2					2	
32-20	1	19				
32-3					3	
32-4				2	2	
32-5				5		
32-6		3			3	
32-7				7		
32-A22		22				
36-16	3		13			
36-2						2
36-4					4	
36-9	14	14	2	1		
36-A8				8		
36-B8	4				4	
40-10	16		9	4		
40-21			21			
40-5					5	

HOW TO ORDER

Sample Part Number	970-012	Z1	24-2	P	2	N	-1

Basic Part Number	970-012 Hermetic Square Flange Receptacle
Material/Finish	Z1 = Stainless Steel / Passivated ZL = Stainless Steel / Electrodeposited Nickel
Shell Size-Insert Arr.	See "Insert Arrangements" Table
Contact Type	P = Pin Contacts, Solder Cup S = Socket Contacts, Solder Cup PA = Pin Contacts, Bus Bar* SA = Socket Contacts, Bus Bar* PC = Pin Contacts, Lug* SC= Socket Contacts, Lug* ** Size 12 and 16 contacts are solder cup*
Contact Plating	1 = Silver 2 = Gold
Mounting Hole Option	N = Thru-Hole
Keyway Position	-1, -2, -3, -4, -5, or -6

RATINGS

Voltage (DWV): 2000 Volts AC
Current: Size 16 contact 10 amps
Size 12 contact 17 amps
Size 8 contact 30 amps
Size 4 contact 60 amps
Size 1/0 contact 125 amps
Size 2/0 contact 150 amps
Operating temperature: -65° to +200°C
Hermeticity: 1E-7 cm^3/s max leak rate @ 1 atmos
Durability: 500 mating cycles
EMI shielding effectiveness: 65 dB min. 100 MHz to 10 GHz
Shock: 50 g
Vibration: per MIL-DTL-38999 Series III
MIL-S-901 high impact shock: Grade A
Blowing sand and dust: MIL-STD-810, method 510.5
Altitude immersion: 75,000 feet
Ingress protection: IP67
Pressure rating: 200 PSI

CONSTRUCTION

Contacts: iron-nickel alloy, gold or silver plated. Socket contacts have BeCu springs.
Shell: stainless steel, passivated or electrodeposited nickel
Insulator: vitreous glass. Socket connectors have additional thermoplastic insulator.
Seals: fluorosilicone

Hermetic Receptacles

970-012 Hermetic Square Flange Receptacle

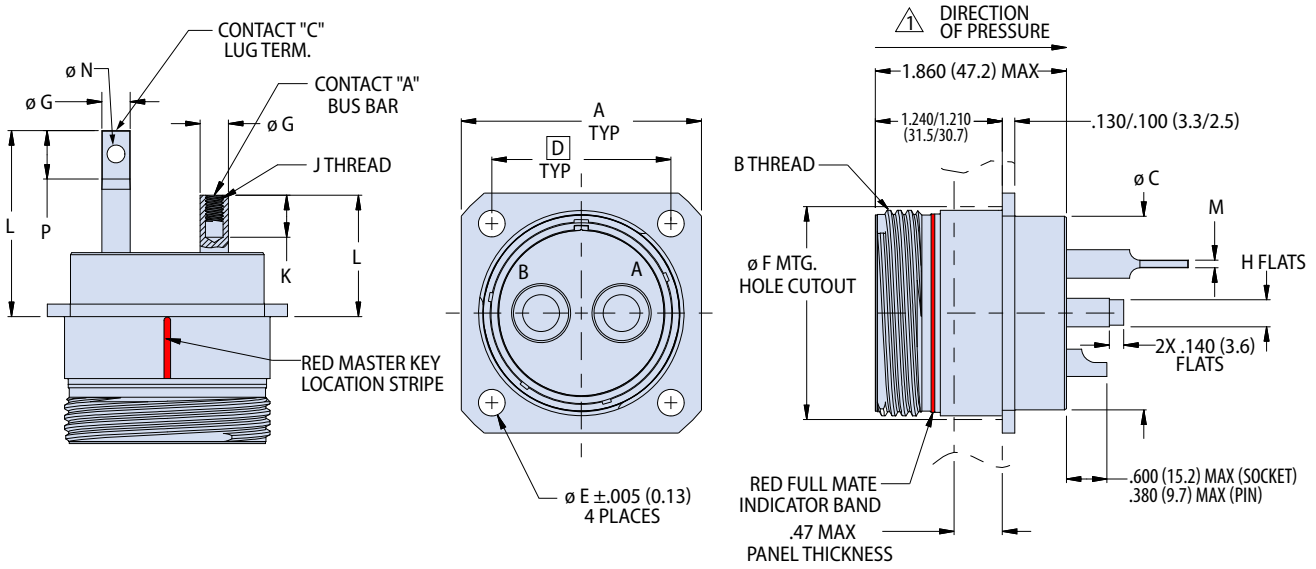

1 PRESSURE RATING 200 PSI MAXIMUM IN DIRECTION INDICATED

DIMENSIONS

Shell Size	A In.	A mm.	B Mating Thread	ø C In.	ø C mm.	D bsc In.	D bsc mm.	ø E In.	ø E mm.	ø F In.	ø F mm.
18	1.383	35.13	1.125-.1P-.3L-TS-2A	.972	24.69	1.015	25.78	.146	3.71	1.187	30.15
20	1.508	38.30	1.250-.1P-.3L-TS-2A	1.116	28.35	1.140	28.96	.146	3.71	1.374	34.90
24	1.718	43.64	1.500-.1P-.3L-TS-2A	1.300	33.02	1.281	32.54	.146	3.71	1.562	39.67
28	2.138	54.31	1.750-.1P-.3L-TS-2A	1.604	40.74	1.568	39.83	.170	4.32	1.874	47.60
32	2.328	59.13	2.000-.1P-.3L-TS-2A	1.875	47.63	1.734	44.04	.170	4.32	2.062	52.37
36	2.578	65.48	2.250-.1P-.3L-TS-2A	2.093	53.16	1.984	50.39	.170	4.32	2.302	58.47
40	2.828	71.83	2.500-.1P-.3L-TS-2A	2.310	58.67	2.234	56.74	.170	4.32	2.562	65.07

KEY POSITIONS

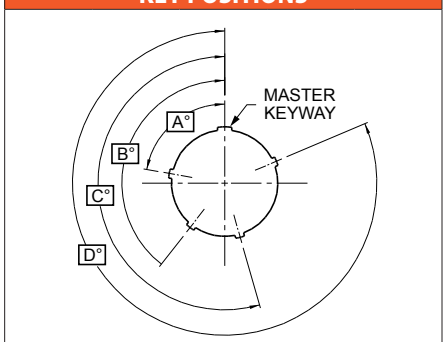

Position	A°	B°	C°	D°
1	80	142	196	293
2	135	170	200	310
3	49	169	200	244
4	66	140	200	257
5	62	145	180	280
6	79	153	197	272

CONTACT STYLE "A" BUS BAR

Contact Size	ø G In.	ø G mm.	H Flat (ref) In.	H Flat (ref) mm.	J THD UNF 2B	K depth In.	K depth mm.	L Length In.	L Length mm.
00	.609	15.5	1/2	12.7	5/16-24	.539	13.7	1.143/1.093	29.03/27.76
0	.562	14.3	1/2	12.7	5/16-24	.539	13.7	1.019/.969	25.88/24.61
4	.386	9.8	5/16	7.9	10-32	.460	11.7	1.019/.969	25.88/24.61
8	.275	7.0	5/16	7.9	8-36	.407	10.3	1.019/.969	25.88/24.61

CONTACT STYLE "C" LUG TERMINATION

Contact Size	ø G In.	ø G mm.	M Thk In.	M Thk mm.	ø N Thru In.	ø N Thru mm.	P Flat In.	P Flat mm.	L Length In.	L Length mm.
00	.609	15.5	.120	3.0	.330	8.4	.946	24.0	2.283/2.233	57.99/56.72
0	.562	14.3	.115	2.9	.330	8.4	.836	21.2	2.049/1.999	52.04/50.77
4	.386	9.8	.085	2.2	.198	5.0	.552	14.0	1.765/1.715	44.85/43.56
8	.275	7.0	.075	1.9	.173	4.4	.468	11.9	1.631/1.581	41.43/40.16

© 2024 Glenair, Inc • 1211 Air Way, Glendale, CA 91201 • 818-247-6000 • www.glenair.com • U.S. CAGE code 06324 • Series 970 PowerTrip Connectors
Dimensions in Inches (millimeters) are subject to change without notice.

Hermetic and Filter Receptacles

970-042 Hermetic Receptacle with Banding Porch or Accessory Threads

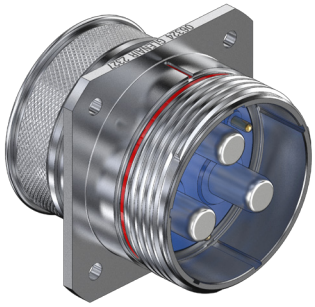

970-042 hermetic receptacle has stainless steel shell, fused glass insulator and iron-nickel alloy contacts. Contacts are three types: solder cup, bus bar or lug termination. Coupling threads are triple-start ACME quick-disconnect. Options for a Banding Porch or Accessory Threads PowerTrip connectors feature low resistance LouverBand contacts and are designed to withstand extreme environments.

- Quick-disconnect self-locking aerospace-grade power connector
- 2000 VAC (DWV)
- -65° to +200°C
- Fused glass hermetic seal
- High shock, high vibration

INSERT ARRANGEMENTS

Insert Arr.	Contact Size and Quantity					
	#16	#12	#8	#4	#1/0	#2/0
18-2			2			
18-4		2	2			
20-3			3			
20-4			4			
20-5		2	3			
20-7	4		3			
24-1					1	
24-2				2		
24-3				3		
24-5			5			
24-6		4		2		
24-A1						1
24-A6		3		3		
28-12	6		6			
28-15	15					
28-4				4		
28-8		1	7			
28-9	5			4		
32-12	2		10			
32-2					2	
32-20	1	19				
32-3					3	
32-4				2	2	
32-5				5		
32-6		3			3	
32-7				7		
32-A22		22				
36-16	3		13			
36-2						2
36-4					4	
36-9	14	14	2	1		
36-A8				8		
36-B8	4				4	
40-10	16		9	4		
40-21			21			
40-5					5	

HOW TO ORDER

Sample Part Number →	970-042	-H0	Z1	36-4	P	2	N	-1

Basic Part Number	970-042 Hermetic Receptacle with Banding Porch or Accessory Threads
Shell Style	-H0 = Wall Mount With Accessory Thread -BH0 = Wall Mount With Single Band Porch
Material/Finish	Z1 = Stainless Steel, Passivate ZL = Stainless Steel, Electrodeposited Nickel
Shell Size-Insert Arr.	See "Insert Arrangements" Table
Contact Type	P = Pin Contacts, Solder Cup S = Socket Contacts, Solder Cup
Contact Plating	1 = Silver 2 = Gold
Mounting Hole Option	N = Thru-Hole
Keyway Position	-1, -2, -3, -4, -5, or -6

RATINGS

Voltage (DWV): 2000 vac pin-to-pin and pin-to-shell w/o breakdown
Current: Size 16 contact 10 amps
Size 12 contact 17 amps
Size 8 contact 30 amps
Size 4 contact 60 amps
Size 1/0 contact 125 amps
Operating temperature: -65° to +200°C
Hermeticity: <1 X 10^-7 scc He/ sec @ 1 atm differential
Durability: 500 mating cycles
EMI shielding effectiveness: 65 dB min. 100 MHz to 10 GHz
Shock: 50 g
Vibration: per MIL-DTL-38999 Series III
MIL-S-901 high impact shock: Grade A
Blowing sand and dust: MIL-STD-810, method 510.5
Altitude immersion: 75,000 feet
Ingress protection: IP67
Pressure rating: 200 PSI maximum in direction indicated

CONSTRUCTION

Contacts, hermetic: iron - nickel alloy / see part number development
Contacts, socket: copper alloy/see part number development
Shell: stainless steel, passivated or electrodeposited nickel
Insulator, hermetic: glass / N.A.
Insulator, socket: rigid dielectric/N.A.
Seals: fluorosilicone

© 2024 Glenair, Inc • 1211 Air Way, Glendale, CA 91201 • 818-247-6000 • www.glenair.com • U.S. CAGE code 06324 • Series 970 PowerTrip Connectors
Dimensions in Inches (millimeters) are subject to change without notice.

Rev. 12.12.24

Hermetic and Filter Receptacles

970-042 Hermetic Receptacle with Banding Porch or Accessory Threads

970-042-BH0 WALL MOUNT WITH SINGLE BAND PORCH

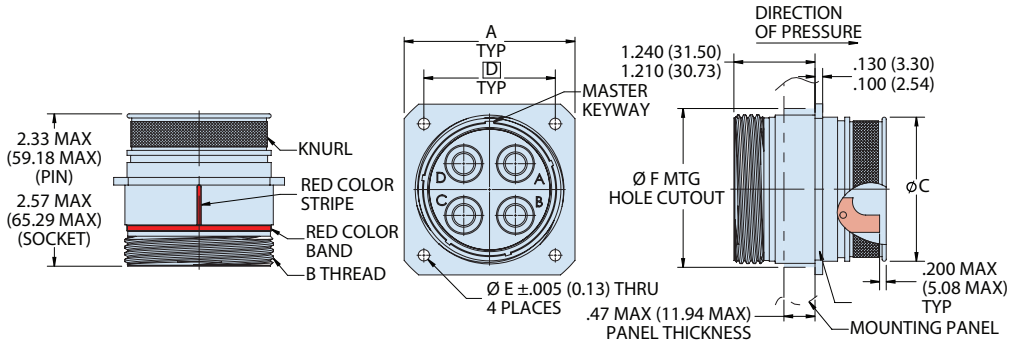

DIMENSIONS

Shell Size	A In.	A mm.	B Mating Thread	ø C In.	ø C mm.	D bsc In.	D bsc mm.	ø E Thru In.	ø E Thru mm.	Ø F Mtg. Hole In.	Ø F Mtg. Hole mm.
18	1.383	35.13	1.125-0.1P-0.3L-TS-2A	1.037	26.34	1.015	25.78	.146	3.7	1.187	30.15
20	1.508	38.30	1.250-0.1P-0.3L-TS-2A	1.163	29.54	1.140	28.96			1.374	34.90
24	1.718	43.64	1.500-0.1P-0.3L-TS-2A	1.350	34.29	1.281	32.54			1.562	39.67
28	2.138	54.31	1.750-0.1P-0.3L-TS-2A	1.670	42.42	1.568	39.83	.170	4.3	1.874	47.60
32	2.328	59.13	2.000-0.1P-0.3L-TS-2A	1.945	49.40	1.734	44.04			2.062	52.37
36	2.578	65.48	2.250-0.1P-0.3L-TS-2A	2.176	55.27	1.984	50.39			2.302	58.47
40	2.828	71.83	2.500-0.1P-0.3L-TS-2A	2.350	59.69	2.234	56.74			2.562	65.07

KEY POSITIONS

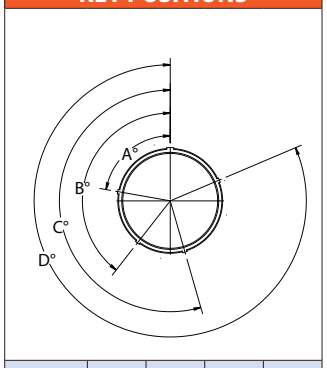

Position	A°	B°	C°	D°
1	80	142	196	293
2	135	170	200	310
3	49	169	200	244
4	66	140	200	257
5	62	145	180	280
6	79	153	197	272

970-042-H0 WALL MOUNT WITH ACCESSORY THREAD

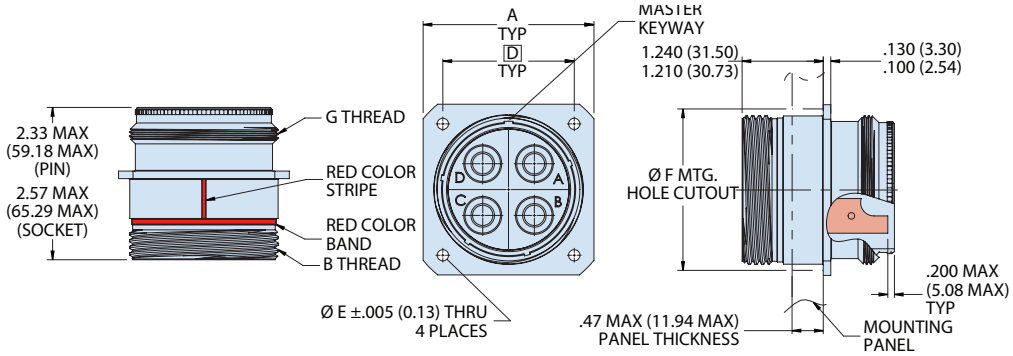

DIMENSIONS

Shell Size	A In.	A mm.	B Mating Thread	ø C In.	ø C mm.	D bsc In.	D bsc mm.	ø E Thru In.	ø E Thru mm.	Ø F Mtg. Hole In.	Ø F Mtg. Hole mm.	G Accessory Thread
18	1.383	35.13	1.125-0.1P-0.3L-TS-2A	1.037	26.34	1.015	25.78	.146	3.7	1.187	30.15	1.125-18 UNEF-2A
20	1.508	38.30	1.250-0.1P-0.3L-TS-2A	1.163	29.54	1.140	28.96			1.374	34.90	1.250-18 UNEF-2A
24	1.718	43.64	1.500-0.1P-0.3L-TS-2A	1.350	34.29	1.281	32.54			1.562	39.67	1.4375-18 UNEF-2A
28	2.138	54.31	1.750-0.1P-0.3L-TS-2A	1.670	42.42	1.568	39.83	.170	4.3	1.874	47.60	1.8125-16 UN-2A
32	2.328	59.13	2.000-0.1P-0.3L-TS-2A	1.945	49.40	1.734	44.04			2.062	52.37	2.0625-16 UNS-2A
36	2.578	65.48	2.250-0.1P-0.3L-TS-2A	2.176	55.27	1.984	50.39			2.302	58.47	2.250-16 UN-2A
40	2.828	71.83	2.500-0.1P-0.3L-TS-2A	2.350	59.69	2.234	56.74			2.562	65.07	2.500-16 UN-2A

© 2024 Glenair, Inc • 1211 Air Way, Glendale, CA 91201 • 818-247-6000 • www.glenair.com • U.S. CAGE code 06324 • Series 970 PowerTrip Connectors
Dimensions in Inches (millimeters) are subject to change without notice.

Hermetic and Filter Receptacles

970-030 Square Flange Hermetic Receptacle with O-ring

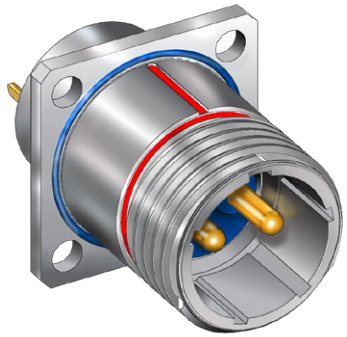

970-030 hermetic receptacle has stainless steel shell, fused glass insulator and iron-nickel alloy solder cup contacts. Square flange shell has fluorosilicone O-ring for rear panel mounting. Coupling threads are triple-start ACME quick-disconnect. PowerTrip connectors feature low resistance LouverBand contacts and are designed to withstand extreme environments.

- Quick-disconnect self-locking aerospace-grade power connector
- 2000 VAC (DWV)
- -65° to +200°C
- Fused glass hermetic seal
- High shock, high vibration

INSERT ARRANGEMENTS

Insert Arr.	Contact Size and Quantity					
	#16	#12	#8	#4	#1/0	#2/0
18-2			2			
18-4		2	2			
20-3			3			
20-4			4			
20-5		2	3			
20-7	4		3			
24-1					1	
24-2				2		
24-3				3		
24-5			5			
24-6		4		2		
24-A1						1
24-A6		3		3		
28-12	6		6			
28-15	15					
28-4				4		
28-8		1	7			
28-9	5			4		
32-12	2		10			
32-2					2	
32-20	1	19				
32-3					3	
32-4				2	2	
32-5				5		
32-6		3			3	
32-7				7		
32-A22		22				
36-16	3		13			
36-2						2
36-4					4	
36-9	14	14	2	1		
36-A8				8		
36-B8	4				4	
40-10	16		9	4		
40-21			21			
40-5					5	

HOW TO ORDER

Sample Part Number →	970-030	Z1	24-2	P	2	N	-1
Basic Part Number	970-030 Hermetic Square Flange Receptacle with O-ring						
Material/Finish	Z1 = Stainless Steel / Passivated ZL = Stainless Steel / Electrodeposited Nickel						
Shell Size-Insert Arr.	See "Insert Arrangements" Table						
Contact Type	P = Pin Contacts, Solder Cup S = Socket Contacts, Solder Cup						
Contact Plating	1 = Silver 2 = Gold						
Mounting Hole Option	N = Thru-Hole						
Keyway Position	-1, -2, -3, -4, -5, or -6						

RATINGS

Voltage (DWV): 2000 Volts AC
Current: Size 16 contact 10 amps
Size 12 contact 17 amps
Size 8 contact 30 amps
Size 4 contact 60 amps
Size 1/0 contact 125 amps
Size 2/0 contact 150 amps
Operating temperature: -65° to +200°C
Hermeticity: 1E-7 cm^3/s max leak rate @ 1 atmos
Durability: 500 mating cycles
EMI shielding effectiveness: 65 dB min. 100 MHz to 10 GHz
Shock: 50 g
Vibration: per MIL-DTL-38999 Series III
MIL-S-901 high impact shock: Grade A
Blowing sand and dust: MIL-STD-810, method 510.5
Altitude immersion: 75,000 feet
Ingress protection: IP67
Pressure rating: 200 PSI

CONSTRUCTION

Contacts: iron-nickel alloy, gold or silver plated. Socket contacts have BeCu springs.
Shell: stainless steel, passivated or electrodeposited nickel
Insulator: vitreous glass. Socket connectors have additional thermoplastic insulator.
Seals: fluorosilicone

Hermetic and Filter Receptacles

970-030 Square Flange Hermetic Receptacle with O-ring

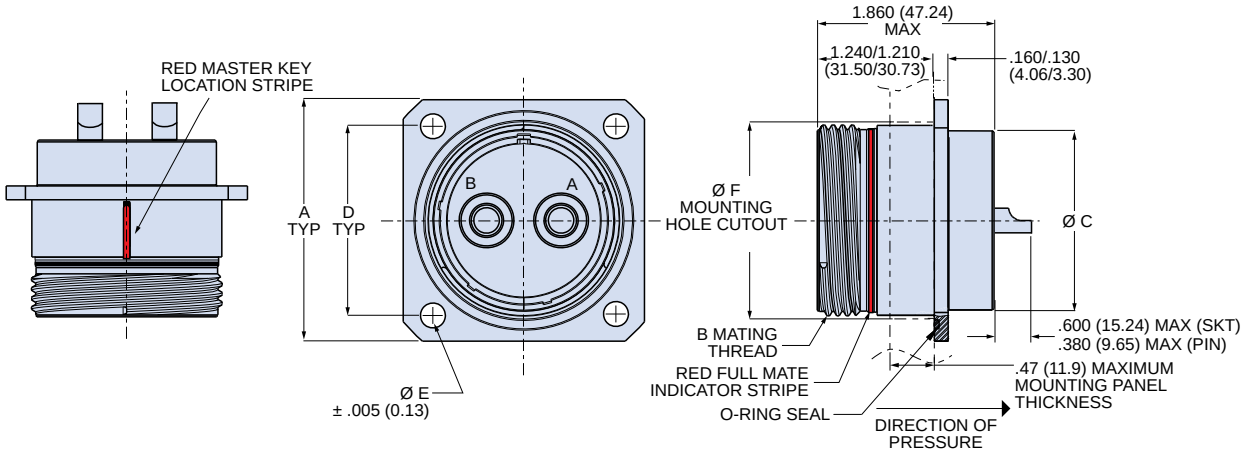

DIMENSIONS

Shell Size	A In.	A mm.	B Mating Thread	C In.	C mm.	D In.	D mm.	ø E In.	ø E mm.	ø F In.	ø F mm.
18	1.591	40.41	1.125-.1P-.3L-TS-2A	.972	24.69	1.275	32.38	.146	3.71	1.187	30.15
20	1.779	45.19	1.250-.1P-.3L-TS-2A	1.116	28.35	1.408	35.76	.146	3.71	1.374	34.90
24	2.029	51.54	1.500-.1P-.3L-TS-2A	1.300	33.02	1.585	40.26	.146	3.71	1.562	39.67
28	2.404	61.06	1.750-.1P-.3L-TS-2A	1.604	40.74	1.905	48.39	.170	4.32	1.874	47.60
32	2.529	64.24	2.000-.1P-.3L-TS-2A	1.875	47.63	1.993	50.62	.170	4.32	2.062	52.37
36	2.654	67.41	2.250-.1P-.3L-TS-2A	2.093	53.16	2.081	52.86	.170	4.32	2.302	58.47
40	3.029	76.94	2.500-.1P-.3L-TS-2A	2.310	58.67	2.347	59.61	.170	4.32	2.562	65.07

KEY POSITIONS

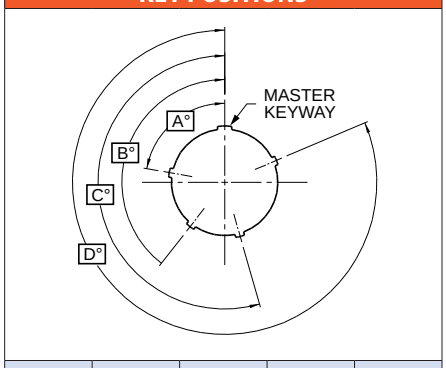

Position	A°	B°	C°	D°
1	80	142	196	293
2	135	170	200	310
3	49	169	200	244
4	66	140	200	257
5	62	145	180	280
6	79	153	197	272

© 2024 Glenair, Inc • 1211 Air Way, Glendale, CA 91201 • 818-247-6000 • www.glenair.com • U.S. CAGE code 06324 • Series 970 PowerTrip Connectors
Dimensions in Inches (millimeters) are subject to change without notice.

Hermetic and Filter Receptacles

970-038 Hermetic Receptacle with Crimp Contacts

970-038 hermetic receptacle has stainless steel shell, fused glass insulator and iron-nickel alloy contacts. Crimp, rear-release contacts are packaged with connector body. Coupling threads are triple-start ACME quick-disconnect. Accessory threads accept Adapter Code P backshells and clamps. PowerTrip connectors feature low resistance LouverBand contacts and are designed to withstand extreme environments.

- **Quick-disconnect self-locking aerospace-grade power connector**
- **2000 VAC (DWV)**
- **-65° to +200°C**
- **Fused glass hermetic seal**
- **Crimp, rear-release contacts**
- **High shock, high vibration**

INSERT ARRANGEMENTS

Insert Arr.	Contact Size and Quantity					
	#16	#12	#8	#4	#1/0	#2/0
18-2			2			
18-4		2	2			
20-3			3			
20-4			4			
20-5		2	3			
20-7	4		3			
24-1					1	
24-2				2		
24-3				3		
24-5			5			
24-6		4		2		
24-A1						1
24-A6		3		3		
28-12	6		6			
28-15	15					
28-4				4		
28-8		1	7			
28-9	5			4		
32-12	2		10			
32-2					2	
32-20	1	19				
32-3					3	
32-4				2	2	
32-5				5		
32-6		3			3	
32-7				7		
32-A22		22				
36-16	3		13			
36-2						2
36-4					4	
36-9	14	14	2	1		
36-A8				8		
36-B8	4				4	
40-10	16		9	4		
40-21			21			
40-5					5	

HOW TO ORDER

Sample Part Number →	**970-038**	**-H2**	**Z1**	**32-5**	**P**	**2**	**-1**	**L**

Basic Number	**970-038** = Crimp Removable Receptacle
Shell Style	**-H2** = Square Flange **-H7** = Jam Nut Mount
Finish	**Z1** = Stainless steel, passivate **ZL** = Stainless steel, electrodeposited nickel
Shell Size-Insert Arr.	See "Insert Arrangements" Table
Contact Style	**P** = Pin **S** = Socket
Contact Plating	**-1** = Silver *(Size 12 and 16 contacts are gold plated)* **-2** = Gold
Keyway Position	**-1**, **-2**, **-3**, **-4**, **-5**, or **-6**
Termination Sockets	Add "**L**" to order less termination sockets

RATINGS

Voltage (DWV): 2000 Volts AC
Current: Size 16 contact 10 amps
Size 12 contact 17 amps
Size 8 contact 30 amps
Size 4 contact 60 amps
Size 1/0 contact 125 amps
Size 2/0 contact 150 amps
Operating temperature: -65° to +200°C
Hermeticity: 1E-7 cm^3/s max leak rate @ 1 atmos
Durability: 500 mating cycles
EMI shielding effectiveness: 65 dB min. 100 MHz to 10 GHz
Shock: 50 g
Vibration: per MIL-DTL-38999 Series III
MIL-S-901 high impact shock: Grade A
Blowing sand and dust: MIL-STD-810, method 510.5
Altitude immersion: 75,000 feet
Ingress protection: IP67
Pressure rating: 200 PSI

CONSTRUCTION

Contacts, hermetic: iron-nickel alloy, gold or silver plated.
Contacts, crimp: Copper alloy, gold or silver plated
Shell, jam nut: stainless steel, passivated or electrodeposited nickel
Insulator, hermetic: vitreous glass
Insulator, crimp: rigid dielectric
Seals, grommet: fluorosilicone

Hermetic and Filter Receptacles

970-038 Hermetic Receptacle, Crimp Rear-Release Contacts

970-038-H2 SQUARE FLANGE

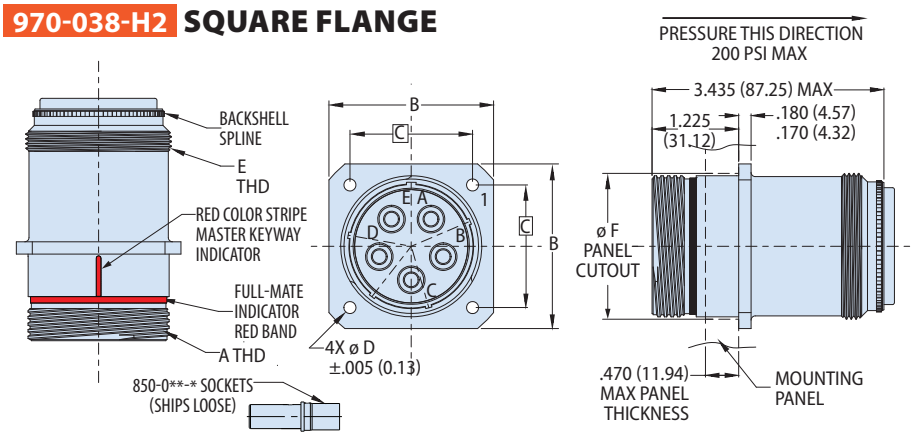

DIMENSIONS

Shell Size	A Mating Thd.	B In.	B mm.	C In.	C mm.	ø D	E Acc. Thread	ø F
18	1.125-.1P-.3L-TS-2A	1.383	35.13	1.015	25.78	.146	1.1250-18 UNEF-2A	1.187
20	1.250-.1P-.3L-TS-2A	1.508	38.30	1.140	28.96	.146	1.2500-18 UNEF-2A	1.374
24	1.500-.1P-.3L-TS-2A	1.718	43.64	1.281	32.54	.146	1.4375-18 UNEF-2A	1.562
28	1.750-.1P-.3L-TS-2A	2.138	54.31	1.588	40.34	.170	1.8125-16 UN-2A	1.874
32	2.000-.1P-.3L-TS-2A	2.328	59.13	1.734	44.04	.170	2.0625-16 UNS-2A	2.062
36	2.250-.1P-.3L-TS-2A	2.578	65.48	1.984	50.39	.170	2.2500-16 UN-2A	2.302
40	2.500-.1P-.3L-TS-2A	2.828	71.83	2.234	56.74	.170	2.5000-16 UN-2A	2.562

970-038-H7 JAM NUT MOUNT

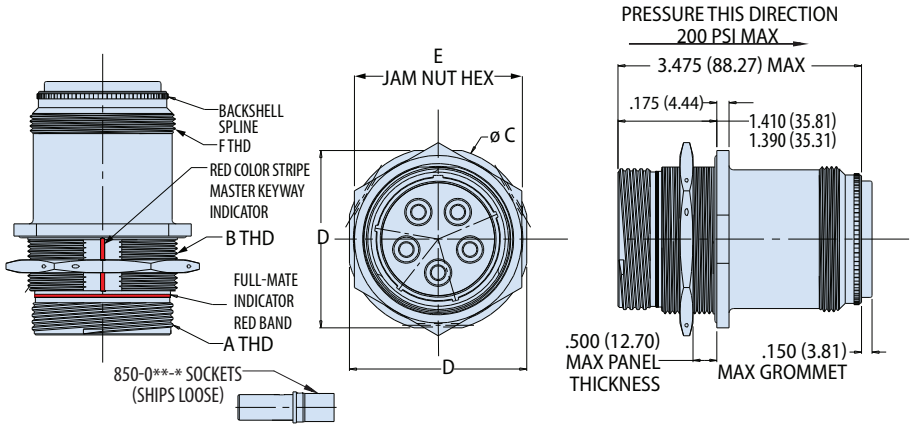

DIMENSIONS

Shell Size	A Mating Thd.	B Mtng. Thd.	ø C In.	ø C mm.	D Flat In.	D Flat mm.	E Hex In.	E Hex mm.	F Access. Thd.
18	1.125-.1P-.3L-TS-2A	1.2500-18 UNEF-2A	1.723	43.76	1.639	41.63	1.438	36.53	1.1250-18 UNEF-2A
20	1.250-.1P-.3L-TS-2A	1.4375-18 UNEF-2A	1.921	48.79	1.827	46.41	1.625	41.28	1.2500-18 UNEF-2A
24	1.500-.1P-.3L-TS-2A	1.6250-18 UNEF-2A	2.108	53.54	2.014	51.16	1.822	46.28	1.4375-18 UNEF-2A
28	1.750-.1P-.3L-TS-2A	1.9375-16 UN-2A	2.425	61.59	2.327	59.11	2.188	55.58	1.8125-16 UN-2A
32	2.000-.1P-.3L-TS-2A	2.1250-16 UN-2A	2.607	66.22	2.513	63.83	2.375	60.33	2.0625-16 UNS-2A
36	2.250-.1P-.3L-TS-2A	2.3750-16 UN-2A	2.857	72.57	2.763	70.18	2.625	66.68	2.2500-16 UN-2A
40	2.500-.1P-.3L-TS-2A	2.6250-16 UN-2A	3.107	78.92	2.875	73.02	2.875	73.02	2.5000-16 UN-2A

KEY POSITIONS

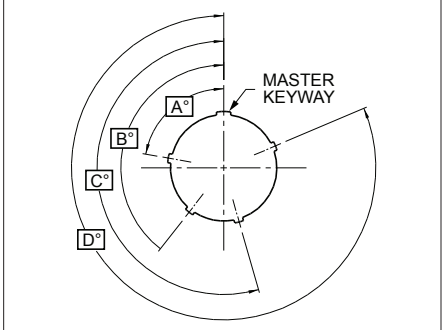

Position	A°	B°	C°	D°
1	80	142	196	293
2	135	170	200	310
3	49	169	200	244
4	66	140	200	257
5	62	145	180	280
6	79	153	197	272

970-038-H7 PANEL CUTOUT

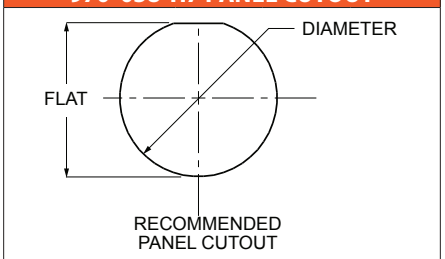

Shell Size	Diameter In. ± .005	Diameter mm. ± 0.13	Flat In. ± .005	Flat mm. ± 0.13
18	1.270	32.26	1.222	31.04
20	1.457	37.01	1.414	35.92
24	1.645	41.78	1.601	40.67
28	1.957	49.71	1.915	48.64
32	2.145	54.48	2.097	53.26
36	2.395	60.83	2.347	59.61
40	2.645	67.18	2.562	65.07

RECOMMENDED JAM NUT TORQUE

Shell Size	Min-Max (in-lb.)
18	80-85
20	100-110
24	110-120
28	145-155
32	170-180
36	190-200
40	210-220

© 2024 Glenair, Inc • 1211 Air Way, Glendale, CA 91201 • 818-247-6000 • www.glenair.com • U.S. CAGE code 06324 • Series 970 PowerTrip Connectors
Dimensions in Inches (millimeters) are subject to change without notice.

Hermetic Receptacles
970-025 Hermetic Jam Nut Receptacle

970-025 hermetic receptacle has stainless steel shell, fused glass insulator and iron-nickel alloy contacts. Contacts are three types: solder cup, bus bar or lug termination. Coupling threads are triple-start ACME quick-disconnect. PowerTrip connectors feature low resistance LouverBand contacts and are designed to withstand extreme environments.

- Quick-disconnect self-locking aerospace-grade power connector
- 2000 VAC (DWV)
- -65° to +200°C
- Fused glass hermetic seal
- High shock, high vibration

INSERT ARRANGEMENTS

Insert Arr.	Contact Size and Quantity					
	#16	#12	#8	#4	#1/0	#2/0
18-2			2			
18-4		2	2			
20-3			3			
20-4			4			
20-5		2	3			
20-7	4		3			
24-1					1	
24-2				2		
24-3				3		
24-5			5			
24-6		4		2		
24-A1						1
24-A6		3		3		
28-12	6		6			
28-15	15					
28-4				4		
28-8		1	7			
28-9	5			4		
32-12	2		10			
32-2					2	
32-20	1	19				
32-3					3	
32-4				2	2	
32-5				5		
32-6		3			3	
32-7				7		
32-A22		22				
36-16	3		13			
36-2						2
36-4					4	
36-9	14	14	2	1		
36-A8				8		
36-B8	4				4	
40-10	16		9	4		
40-21			21			
40-5					5	

HOW TO ORDER

Sample Part Number	970-025	ZL	20-4	P	1	-1

Basic Part Number	970-025 Hermetic Jam Nut Receptacle
Material/Finish	Z1 = Stainless Steel / Passivated ZL = Stainless Steel / Electrodeposited Nickel
Shell Size-Insert Arr.	See "Insert Arrangements" Table
Contact Type	P = Pin Contacts, Solder Cup S = Socket Contacts, Solder Cup PA = Pin Contacts, Bus Bar* SA = Socket Contacts, Bus Bar* PC = Pin Contacts, Lug* SC= Socket Contacts, Lug* ** Size 12 and 16 contacts are solder cup*
Contact Plating	1 = Silver 2 = Gold
Keyway Position	-1, -2, -3, -4, -5, or -6

RATINGS

Voltage (DWV): 2000 Volts AC
Current: Size 16 contact 10 amps
Size 12 contact 17 amps
Size 8 contact 30 amps
Size 4 contact 60 amps
Size 1/0 contact 125 amps
Size 2/0 contact 150 amps
Operating temperature: -65° to +200°C
Hermeticity: 1E-7 cm^3/s max leak rate @ 1 atmos
Durability: 500 mating cycles
EMI shielding effectiveness: 65 dB min. 100 MHz to 10 GHz
Shock: 50 g
Vibration: per MIL-DTL-38999 Series III
MIL-S-901 high impact shock: Grade A
Blowing sand and dust: MIL-STD-810, method 510.5
Altitude immersion: 75,000 feet
Ingress protection: IP67
Pressure rating: 200 PSI

CONSTRUCTION

Contacts: iron-nickel alloy, gold or silver plated. Socket contacts have BeCu springs.
Shell, jam nut: stainless steel, passivated or electrodeposited nickel
Insulator: vitreous glass. Socket connectors have additional thermoplastic insulator.
Seals: fluorosilicone

RECOMMENDED JAM NUT TORQUE

Shell Size	Min-Max (in-lb.)
18	80-85
20	100-110
24	110-120
28	145-155
32	170-180
36	190-200
40	210-220

© 2024 Glenair, Inc • 1211 Air Way, Glendale, CA 91201 • 818-247-6000 • www.glenair.com • U.S. CAGE code 06324 • Series 970 PowerTrip Connectors

Dimensions in Inches (millimeters) are subject to change without notice.
Rev 06.24.2025

Hermetic Receptacles
970-025 Hermetic Jam Nut Receptacle

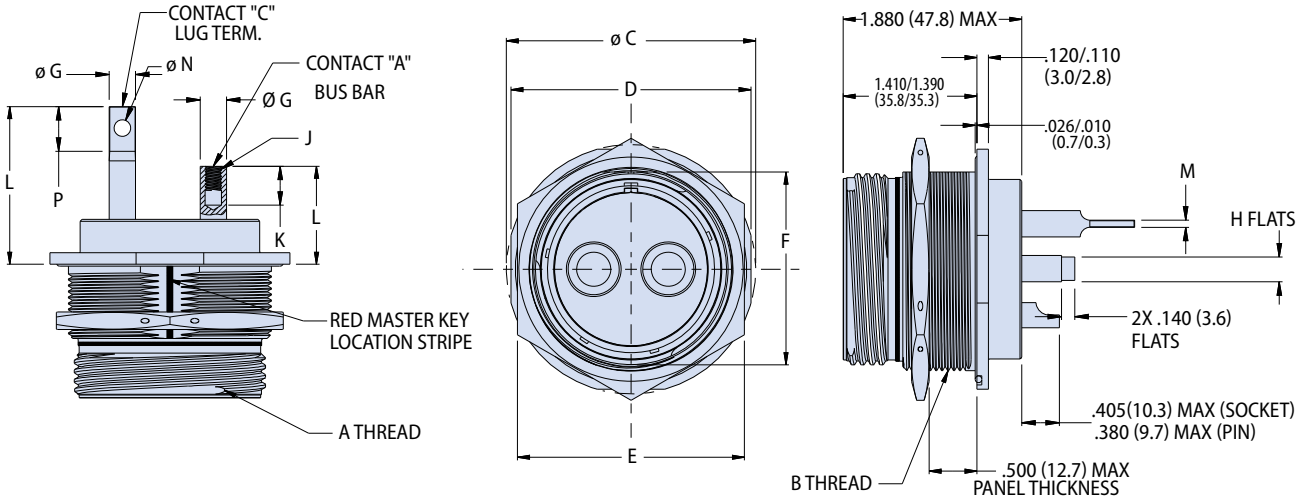

DIMENSIONS

Shell Size	A Mating Thd.	B Jam-Nut Thd.	ø C In.	ø C mm.	D In.	D mm.	E In.	E mm.	F In.	F mm.
18	1.125-.1P-.3L-TS-2A	1.250-18 UNEF-2A	1.733	44.02	1.639	41.63	1.438	36.53	1.212	30.78
20	1.250-.1P-.3L-TS-2A	1.4375-18 UNEF-2A	1.921	48.79	1.827	46.41	1.625	41.28	1.399	35.53
24	1.500-.1P-.3L-TS-2A	1.625-18 UNEF-2A	2.108	53.54	2.014	51.16	1.822	46.28	1.587	40.31
28	1.750-.1P-.3L-TS-2A	1.9375-16 UN-2A	2.425	61.60	2.327	59.11	2.188	55.58	1.899	48.23
32	2.000-.1P-.3L-TS-2A	2.125-16 UN-2A	2.607	66.24	2.513	63.86	2.375	60.33	2.084	53.01
36	2.250-.1P-.3L-TS-2A	2.375-16 UN-2A	2.857	72.57	2.763	70.18	2.625	66.68	2.323	59.00
40	2.500-.1P-.3L-TS-2A	2.625-16 UN-2A	3.107	78.92	3.013	76.53	2.875	73.03	2.548	64.72

PANEL CUTOUT

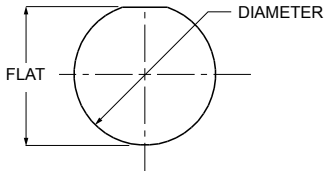

Shell Size	Diameter In. -0.0/+.010	Diameter mm. -0.0/+0.25	Flat In. -0.0/+.010	Flat mm. -0.0/+0.25
18	1.265	32.13	1.217	30.91
20	1.452	36.88	1.409	35.79
24	1.640	41.66	1.596	40.54
28	1.952	49.58	1.910	48.51
32	2.140	54.36	2.092	53.14
36	2.390	60.71	2.342	59.49
40	2.640	67.06	2.557	64.95

CONTACT STYLE "A" BUS BAR

Contact Size	ø G In.	ø G mm.	H Flat (ref) In.	H Flat (ref) mm.	J THD UNF 2B	K depth In.	K depth mm.	L Length In.	L Length mm.
00	.609	15.5	1/2	12.7	5⁄16-24	.539	13.7	.968/.918	24.59/23.32
0	.562	14.3	1/2	12.7	5⁄16-24	.539	13.7	.844/.794	21.44/20.17
4	.386	9.8	5/16	7.9	10-32	.460	11.7	.844/.794	21.44/20.17
8	.275	7.0	5/16	7.9	8-36	.407	10.3	.844/.794	21.44/20.17

KEY POSITIONS

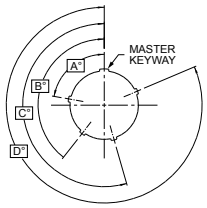

Position	A°	B°	C°	D°
1	80	142	196	293
2	135	170	200	310
3	49	169	200	244
4	66	140	200	257
5	62	145	180	280
6	79	153	197	272

CONTACT STYLE "C" LUG TERMINATION

Contact Size	ø G In.	ø G mm.	M Thk In.	M Thk mm.	ø N Thru In.	ø N Thru mm.	P Flat In.	P Flat mm.	L Length In.	L Length mm.
00	.609	15.5	.120	3.0	.330	8.4	.946	24.0	2.108/2.058	53.54/52.27
0	.562	14.3	.115	2.9	.330	8.4	.836	21.2	1.874/1.824	47.60/46.33
4	.386	9.8	.085	2.2	.198	5.0	.552	14.0	1.590/1.540	40.39/39.12
8	.275	7.0	.075	1.9	.173	4.4	.468	11.9	1.446/1.396	36.73/35.46

© 2024 Glenair, Inc • 1211 Air Way, Glendale, CA 91201 • 818-247-6000 • www.glenair.com • U.S. CAGE code 06324 • Series 970 PowerTrip Connectors
Dimensions in Inches (millimeters) are subject to change without notice.

Hermetic and Filter Receptacles

970-041 Lightweight Hermetic Jam Nut Feed-Thru Receptacle

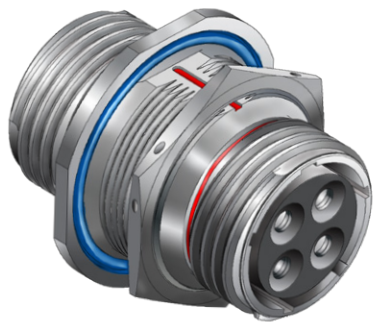

970-041 jam nut hermetic bulkhead feedthrough receptacle accepts plugs on both sides. Code Red sealing process yields higher current rating and lighter weight compared to glass-sealed hermetic versions. Coupling threads are triple-start ACME quick-disconnect. PowerTrip connectors feature low resistance LouverBand contacts and are designed to withstand extreme environments.

CODE RED

CODE RED is an innovative sealing process — invented by Glenair — that provides durable hermetic sealing in a lightweight aluminum package. CODE RED allows for the use of conventional gold-plated copper alloy contacts, significantly improving electrical performance. These connectors deliver reliable, life-of-system 1x10^{-7} max leak-rate hermetic sealing.

- Quick-disconnect self-locking aerospace-grade power connector
- 2000 VAC (DWV)
- -65° to +200°C
- High shock, high vibration
- Safety interlock insert arrangements

INSERT ARRANGEMENTS

Insert Arr.	Contact Size and Quantity					
	#16	#12	#8	#4	#1/0	#2/0
18-2			2			
18-4		2	2			
20-3			3			
20-4			4			
20-5		2	3			
20-7	4		3			
24-1					1	
24-2				2		
24-3				3		
24-5			5			
24-6		4		2		
24-A1						1
24-A6		3		3		
28-12	6		6			
28-15	15					
28-4				4		
28-8		1	7			
28-9	5			4		
32-12	2		10			
32-2					2	
32-20	1	19				
32-3					3	
32-4				2	2	
32-5				5		
32-6		3			3	
32-7				7		
32-A22		22				
36-16	3		13			
36-2						2
36-4					4	
36-9	14	14	2	1		
36-A8				8		
36-B8	4				4	
40-10	16		9	4		
40-21			21			
40-5					5	

HOW TO ORDER

Sample Part Number →	970-041	ME	32-2	P	2	-1

Basic Part Number	**970-041** Bulkhead Feedthrough Hermetic Jam Nut Receptacle
Material/Finish	**ME** = Aluminum / Electroless Nickel **NF** = Aluminum / Olive Drab Cadmium **ZR** = Aluminum / Black Zinc-Nickel **Z1** = Stainless Steel / Passivated
Shell Size-Insert Arr.	See "Insert Arrangements" Table
Contact Designator	**P** = Pin Contacts on Jam Nut Side (sockets opposite) **S** = Socket Contacts on Jam Nut Side (pins opposite)
Contact Plating	**2** = Gold
Keyway Position	**-1**, **-2**, **-3**, **-4**, **-5**, or **-6**

RATINGS

Voltage (DWV): 2000 Volts AC

Current: Size 16 contact 13 amps
Size 12 contact 23 amps
Size 8 contact 60 amps
Size 4 contact 100 amps
Size 1/0 contact 175 amps
Size 2/0 contact 205 amps

Operating temperature:
Matl/Finish Code ME, Z1: -65° to +200°C
Codes NF, ZR: -65 to +175 °C

Hermeticity: 1E-7 cm^3/s max leak rate @ 1 atmos

Durability: 500 mating cycles

EMI shielding effectiveness: 65 dB min. 100 MHz to 10 GHz

Shock: 50 g

Vibration: per MIL-DTL-38999 Series III

MIL-S-901 high impact shock: Grade A

Blowing sand and dust: MIL-STD-810, method 510.5

Altitude immersion: 75,000 feet

Ingress protection: IP67

Water pressure: 6 feet, 48 hours

CONSTRUCTION

Contacts:
size #8 and larger: high conductivity copper alloy, gold plated.
Size #12, #16: copper alloy, gold plated

Shell, Jam Nut: Aluminum or stainless steel, see How to Order

Insulator: Glass-filled thermoset epoxy

Face seal, O-ring, peripheral seal: fluorosilicone

Insert retainer ring: aluminum or stainless steel, see How to Order

Sealing compound: polymer encapsulant

Hermetic and Filter Receptacles

970-041 Lightweight Hermetic Jam Nut Feed-Thru Receptacle

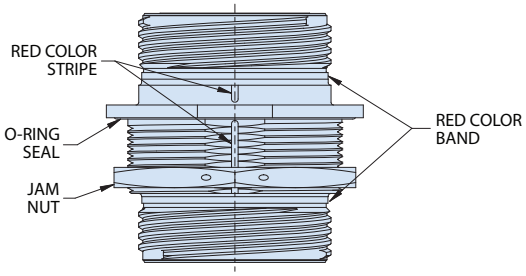

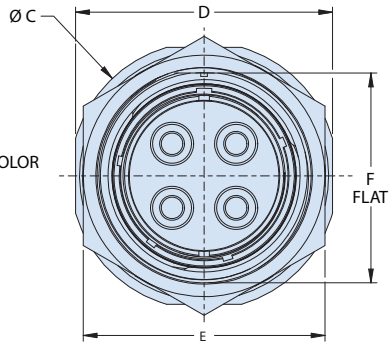

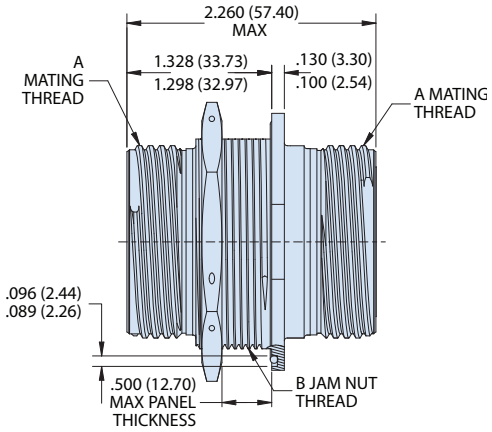

DIMENSIONS										
Shell Size	A Mating Thread	B Jam Nut Thread	ø C		D		E		F	
			In.	mm.	In.	mm.	In.	mm.	In.	mm.
18	1.125-0.1P-0.3L-TS-2A	1.250-18UNEF-2A	1.733	44.02	1.639	41.63	1.438	36.53	1.212	30.78
20	1.250-0.1P-0.3L-TS-2A	1.4375-18UNEF-2A	1.921	48.79	1.827	46.41	1.625	41.28	1.399	35.53
24	1.500-0.1P-0.3L-TS-2A	1.625-18UNEF-2A	2.108	53.54	2.014	51.16	1.822	46.28	1.587	40.31
28	1.750-0.1P-0.3L-TS-2A	1.9375-16UN-2A	2.425	61.60	2.327	59.11	2.188	55.58	1.899	48.23
32	2.000-0.1P-0.3L-TS-2A	2.125-16UN-2A	2.607	66.24	2.513	63.86	2.375	60.33	2.084	53.00
36	2.250-0.1P-0.3L-TS-2A	2.375-16UN-2A	2.857	72.57	2.763	70.18	2.625	66.68	2.323	59.00
40	2.500-0.1P-0.3L-TS-2A	2.625-16UN-2A	3.107	78.92	3.013	76.53	2.875	73.03	2.548	54.72

KEY POSITIONS

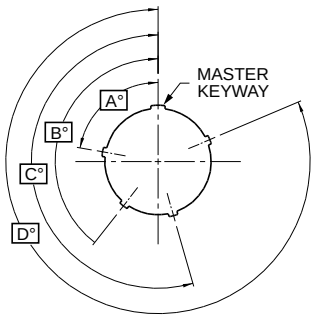

Position	A°	B°	C°	D°
1	80	142	196	293
2	135	170	200	310
3	49	169	200	244
4	66	140	200	257
5	62	145	180	280
6	79	153	197	272

PANEL CUTOUT

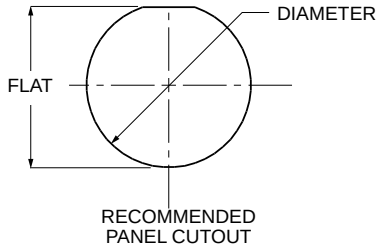

Shell Size	Diameter		Flat	
	In. -0.0/+.010	mm. -0.0/+0.25	In. -0.0/+.010	mm. -0.0/+0.25
18	1.265	32.13	1.217	30.91
20	1.452	36.88	1.409	35.79
24	1.640	41.66	1.596	40.54
28	1.952	49.58	1.910	48.51
32	2.140	54.36	2.092	53.14
36	2.390	60.71	2.342	59.49
40	2.640	67.06	2.557	64.95

RECOMMENDED JAM NUT TORQUE

Shell Size	Min-Max (in-lb.)
18	80-85
20	100-110
24	110-120
28	145-155
32	170-180
36	190-200
40	210-220

© 2024 Glenair, Inc • 1211 Air Way, Glendale, CA 91201 • 818-247-6000 • www.glenair.com • U.S. CAGE code 06324 • Series 970 PowerTrip Connectors
Dimensions in Inches (millimeters) are subject to change without notice.

970-007 Hermetic Jam Nut Feed-Thru

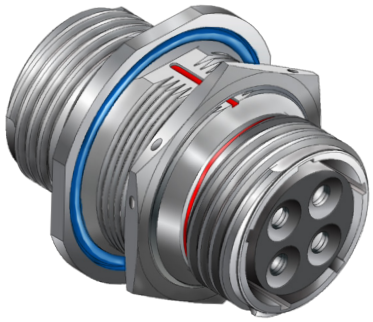

970-007 bulkhead feed-thru has stainless steel shell, fused glass insulator and nickel-iron alloy contacts. Contacts are pin on one side and socket on the opposite side. Attach plug connector to both sides. Coupling threads are triple-start ACME quick-disconnect. PowerTrip connectors feature low resistance LouverBand contacts and are designed to withstand extreme environments.

- **Quick-disconnect self-locking aerospace-grade power connector**
- **2000 VAC (DWV)**
- **-65° to +200°C**
- **Fused glass hermetic seal**
- **High shock, high vibration**

INSERT ARRANGEMENTS

Insert Arr.	Contact Size and Quantity					
	#16	#12	#8	#4	#1/0	#2/0
18-2			2			
18-4		2	2			
20-3			3			
20-4			4			
20-5		2	3			
20-7	4		3			
24-1					1	
24-2				2		
24-3				3		
24-5			5			
24-6		4		2		
24-A1						1
24-A6		3		3		
28-12	6		6			
28-15	15					
28-4				4		
28-8		1	7			
28-9	5			4		
32-12	2		10			
32-2					2	
32-20	1	19				
32-3					3	
32-4				2	2	
32-5				5		
32-6		3			3	
32-7				7		
32-A22		22				
36-16	3		13			
36-2						2
36-4					4	
36-9	14	14	2	1		
36-A8				8		
36-B8	4				4	
40-10	16		9	4		
40-21			21			
40-5					5	

HOW TO ORDER

Sample Part Number → 970-007 ZL 20-4 P 1 -1

Basic Part Number	**970-007** Hermetic Jam Nut Feed-Thru
Material/Finish	**Z1** = Stainless Steel / Passivated **ZL** = Stainless Steel / Electrodeposited Nickel
Shell Size-Insert Arr.	See "Insert Arrangements" Table
Contact Type	**P** = Pin Contacts on Jam Nut Side (sockets opposite) **S** = Socket Contacts on Jam Nut Side (pins opposite)
Contact Plating	**1** = Silver* **2** = Gold * Size 8, 4, 1/0 and 2/0 are silver plated. Size 12 and 16 contacts are gold-plated.
Keyway Position	**-1**, **-2**, **-3**, **-4**, **-5**, or **-6**

RATINGS

Voltage (DWV): 2000 Volts AC
Current: Size 16 contact 10 amps
Size 12 contact 17 amps
Size 8 contact 30 amps
Size 4 contact 60 amps
Size 1/0 contact 125 amps
Size 2/0 contact 150 amps
Operating temperature: -65° to +200°C
Hermeticity: 1E-7 cm^3/s max leak rate @ 1 atmos
Durability: 500 mating cycles
EMI shielding effectiveness: 65 dB min. 100 MHz to 10 GHz
Shock: 50 g
Vibration: per MIL-DTL-38999 Series III
MIL-S-901 high impact shock: Grade A
Blowing sand and dust: MIL-STD-810, method 510.5
Altitude immersion: 75,000 feet

CONSTRUCTION

Contacts: Iron-nickel alloy, gold or silver plated. Socket contacts have BeCu springs.
Shell, jam nut: Stainless steel, passivated or electrodeposited nickel
Insulator: Vitreous glass and thermoset epoxy
Seals: Fluorosilicone blend elastomer

970-007 Hermetic Jam Nut Feed-Thru

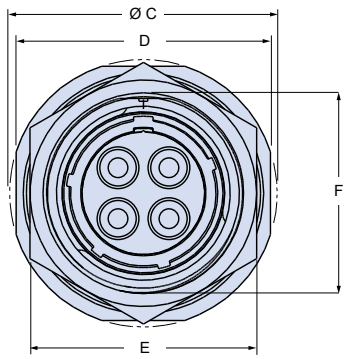

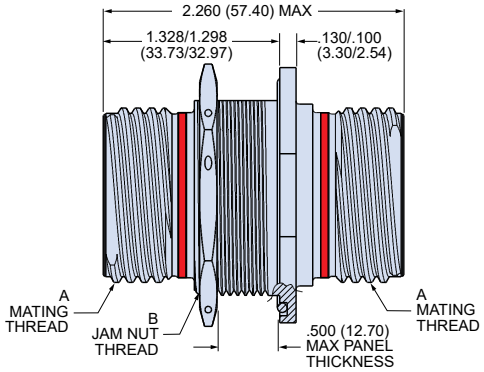

DIMENSIONS

Shell Size	A Mating Thd.	B Jam-Nut Thd.	ø C		D		E		F	
			In.	mm.	In.	mm.	In.	mm.	In.	mm.
18	1.125-.1P-.3L-TS-2A	1.250-18 UNEF-2A	1.733	44.02	1.639	41.63	1.438	36.53	1.212	30.78
20	1.250-.1P-.3L-TS-2A	1.4375-18 UNEF-2A	1.921	48.79	1.827	46.41	1.625	41.28	1.399	35.53
24	1.500-.1P-.3L-TS-2A	1.625-18 UNEF-2A	2.108	53.54	2.014	51.16	1.822	46.42	1.587	40.31
28	1.750-.1P-.3L-TS-2A	1.9375-16 UN-2A	2.425	61.60	2.327	59.11	2.188	55.58	1.899	48.23
32	2.000-.1P-.3L-TS-2A	2.125-16 UN-2A	2.607	66.24	2.513	63.86	2.375	60.33	2.087	53.01
36	2.250-.1P-.3L-TS-2A	2.375-16 UN-2A	2.857	72.57	2.763	70.18	2.625	66.68	2.323	59.00
40	2.500-.1P-.3L-TS-2A	2.625-16 UN-2A	3.107	78.92	3.013	76.53	2.875	73.03	2.548	64.72

KEY POSITIONS

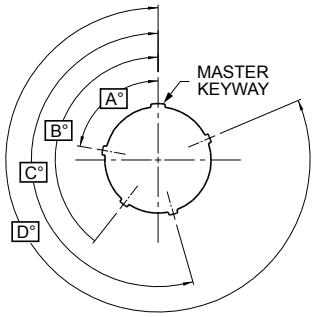

Position	A°	B°	C°	D°
1	80	142	196	293
2	135	170	200	310
3	49	169	200	244
4	66	140	200	257
5	62	145	180	280
6	79	153	197	272

PANEL CUTOUT

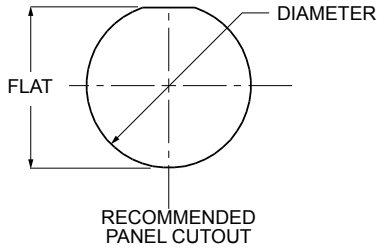

Shell Size	Diameter In. -0.0/+.010	Diameter mm. -0.0/+0.25	Flat In. -0.0/+.010	Flat mm. -0.0/+0.25
18	1.265	32.13	1.217	30.91
20	1.452	36.88	1.409	35.79
24	1.640	41.66	1.596	40.54
28	1.952	49.58	1.910	48.51
32	2.140	54.36	2.092	53.14
36	2.390	60.71	2.342	59.49
40	2.640	67.06	2.557	64.95

RECOMMENDED JAM NUT TORQUE

Shell Size	Min-Max (in-lb.)
18	80-85
20	100-110
24	110-120
28	145-155
32	170-180
36	190-200
40	210-220

© 2024 Glenair, Inc • 1211 Air Way, Glendale, CA 91201 • 818-247-6000 • www.glenair.com • U.S. CAGE code 06324 • Series 970 PowerTrip Connectors
Dimensions in Inches (millimeters) are subject to change without notice.

970-026 Hermetic Jam Nut Feed-Thru, Double O-rings

970-026 feed-thru with double panel O-ring has stainless steel shell, fused glass insulator and nickel-iron alloy contacts. Contacts are pin on one side and socket on the opposite side. Attach plug connector to both sides. Coupling threads are triple-start ACME quick-disconnect. PowerTrip connectors feature low resistance LouverBand contacts and are designed to withstand extreme environments.

- Quick-disconnect self-locking aerospace-grade power connector
- 2000 VAC (DWV)
- -65° to +200°C
- Fused glass hermetic seal
- High shock, high vibration

INSERT ARRANGEMENTS

Insert Arr.	Contact Size and Quantity					
	#16	#12	#8	#4	#1/0	#2/0
18-2			2			
18-4		2	2			
20-3			3			
20-4			4			
20-5		2	3			
20-7	4		3			
24-1					1	
24-2				2		
24-3				3		
24-5			5			
24-6		4		2		
24-A1						1
24-A6		3		3		
28-12	6		6			
28-15	15					
28-4				4		
28-8		1	7			
28-9	5			4		
32-12	2		10			
32-2					2	
32-20	1	19				
32-3					3	
32-4				2	2	
32-5				5		
32-6		3			3	
32-7				7		
32-A22		22				
36-16	3		13			
36-2						2
36-4					4	
36-9	14	14	2	1		
36-A8				8		
36-B8	4				4	
40-10	16		9	4		
40-21			21			
40-5					5	

HOW TO ORDER

Sample Part Number →	970-026	Z1	20-4	P	2	-1

Basic Part Number	**970-026** Hermetic Jam Nut Feed-Thru with Double O-rings
Material/Finish	**Z1** = Stainless Steel / Passivated **ZL** = Stainless Steel / Electrodeposited Nickel
Shell Size-Insert Arr.	See "Insert Arrangements" Table
Contact Type	**P** = Pin Contacts on Jam Nut Side (sockets opposite) **S** = Socket Contacts on Jam Nut Side (pins opposite)
Contact Plating	**1** = Silver* **2** = Gold * Size 8, 4, 1/0 and 2/0 contacts are silver plated. Size 12 and 16 contacts are gold-plated.
Keyway Position	**-1**, **-2**, **-3**, **-4**, **-5**, or **-6**

RATINGS

Voltage (DWV): 2000 Volts AC
Current: Size 16 contact 10 amps
Size 12 contact 17 amps
Size 8 contact 30 amps
Size 4 contact 60 amps
Size 1/0 contact 125 amps
Size 2/0 contact 150 amps
Operating temperature: -65° to +200°C
Hermeticity: 1E-7 cm^3/s max leak rate @ 1 atmos
Durability: 500 mating cycles
EMI shielding effectiveness: 65 dB min. 100 MHz to 10 GHz
Shock: 50 g
Vibration: per MIL-DTL-38999 Series III
MIL-S-901 high impact shock: Grade A
Blowing sand and dust: MIL-STD-810, method 510.5
Altitude immersion: 75,000 feet

CONSTRUCTION

Contacts: Iron-nickel alloy, gold or silver plated. Socket contacts have BeCu springs.
Shell, jam nut: Stainless steel, passivated or electrodeposited nickel
Insulator: Vitreous glass and thermoset epoxy
Seals: Fluorosilicone blend elastomer

970-026 Hermetic Jam Nut Feed-Thru, Double O-rings

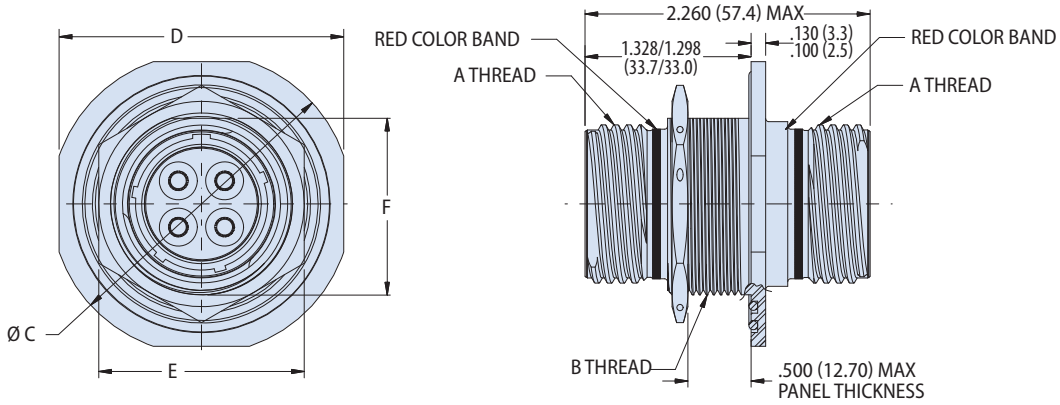

DIMENSIONS										
Shell Size	A Mating Thd.	B Jam-Nut Thd.	ø C		D		E		F	
			In.	mm.	In.	mm.	In.	mm.	In.	mm.
18	1.125-.1P-.3L-TS-2A	1.250-18 UNEF-2A	2.250	57.15	2.125	53.98	1.438	36.53	1.212	30.78
20	1.250-.1P-.3L-TS-2A	1.4375-18 UNEF-2A	2.375	60.33	2.250	57.15	1.625	41.28	1.399	35.53
24	1.500-.1P-.3L-TS-2A	1.625-18 UNEF-2A	2.625	66.68	2.500	63.50	1.822	46.42	1.587	40.31
28	1.750-.1P-.3L-TS-2A	1.9375-16 UN-2A	2.875	73.03	2.700	68.58	2.188	55.58	1.899	48.23
32	2.000-.1P-.3L-TS-2A	2.125-16 UN-2A	3.000	76.20	2.800	71.12	2.375	60.33	2.084	53.00
36	2.250-.1P-.3L-TS-2A	2.375-16 UN-2A	3.125	79.38	3.025	76.84	2.625	66.68	2.323	59.00
40	2.500-.1P-.3L-TS-2A	2.625-16 UN-2A	3.50	88.90	3.300	83.82	2.875	73.03	2.548	54.72

KEY POSITIONS

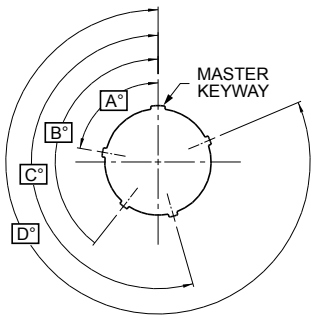

Position	A°	B°	C°	D°
1	80	142	196	293
2	135	170	200	310
3	49	169	200	244
4	66	140	200	257
5	62	145	180	280
6	79	153	197	272

PANEL CUTOUT

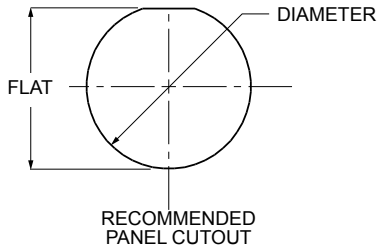

Shell Size	Diameter		Flat	
	In. -0.0/+.010	mm. -0.0/+0.25	In. -0.0/+.010	mm. -0.0/+0.25
18	1.265	32.13	1.217	30.91
20	1.452	36.88	1.409	35.79
24	1.640	41.66	1.596	40.54
28	1.952	49.58	1.910	48.51
32	2.140	54.36	2.092	53.14
36	2.390	60.71	2.342	59.49
40	2.640	67.06	2.557	64.95

RECOMMENDED JAM NUT TORQUE

Shell Size	Min-Max (in-lb.)
18	80-85
20	100-110
24	110-120
28	145-155
32	170-180
36	190-200
40	210-220

© 2024 Glenair, Inc • 1211 Air Way, Glendale, CA 91201 • 818-247-6000 • www.glenair.com • U.S. CAGE code 06324 • Series 970 PowerTrip Connectors
Dimensions in Inches (millimeters) are subject to change without notice.

Hermetic and Filter Receptacles
240-970 Filter Receptacle

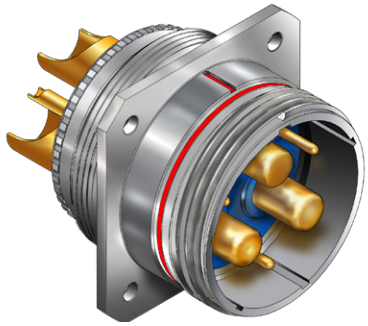

240-970 receptacle has planar array ceramic capacitors for Type C filtering. Accessory thread for attaching strain relief clamps, backshells or adapters. Solder cup contacts are non-removable. Panel mount styles include jam nut and square flange. Coupling threads are triple-start ACME quick-disconnect. PowerTrip connectors feature low resistance LouverBand contacts and are designed to withstand extreme environments.

- Quick-disconnect self-locking aerospace-grade power connector
- 1250 VAC (DWV)
- -55° to +125°C
- Filter Type C
- High shock, high vibration

INSERT ARRANGEMENTS

Insert Arr.	Contact Size and Quantity					
	#16	#12	#8	#4	#1/0	#2/0
18-2			2			
18-4		2	2			
20-3			3			
20-4			4			
20-5		2	3			
20-7	4		3			
24-1					1	
24-2				2		
24-3				3		
24-5			5			
24-6		4		2		
24-A1						1
24-A6		3		3		
28-12	6		6			
28-15	15					
28-4				4		
28-8		1	7			
28-9	5			4		
32-12	2		10			
32-2					2	
32-20	1	19				
32-3					3	
32-4				2	2	
32-5				5		
32-6		3			3	
32-7				7		
32-A22		22				
36-16	3		13			
36-2						2
36-4					4	
36-9	14	14	2	1		
36-A8				8		
36-B8	4				4	
40-10	16		9	4		
40-21			21			
40-5					5	

HOW TO ORDER

Sample Part Number → 240-970 J ME 32-5 PS C X N -1

Basic Number	240-970 = Filter Receptacle
Shell Style	W = Square Flange Mount J = Jam Nut Mount
Material / Finish	ME = Aluminum / Electroless Nickel MT = Aluminum / Nickel PTFE NF = Aluminum / Olive Drab Cadmium TZ = Aluminum / Tin-Zinc ZR = Aluminum / Black Zinc-Nickel Z1 = Stainless Steel / Passivated
Shell Size-Insert Arr.	See "Insert Arrangements" Table
Contact Style	PS = Pin, Solder Cup SS = Socket, Solder Cup
Filter Type	C = C Filter
Filter Capacitance	X = 80,000 – 120,000 pF Y = 40,000 – 6,000 pF Z = 30,000 – 45,500 pF
Mounting Flange Style	N = Standard Mounting *(240-970W square flange has thru-holes)* T = Clinch Nuts *(240-970W only)*
Keyway Position	-1, -2, -3, -4, -5, or -6

RATINGS

Voltage (DWV): 1250 Volts AC
Current: Size 16 contact 13 amps
Size 12 contact 23 amps
Size 8 contact 60 amps
Size 4 contact 100 amps
Size 1/0 contact 175 amps
Size 2/0 contact 205 amps
Operating temperature: -55 to +125 °C
Durability: 500 mating cycles
EMI shielding effectiveness: 65 dB min. 100 MHz to 10 GHz
Shock: 50 g
Vibration: per MIL-DTL-38999 Series III
MIL-S-901 high impact shock: Grade A
Blowing sand and dust: MIL-STD-810, method 510.5
Altitude immersion: 75,000 feet
Ingress protection: IP67
Pressure rating: 200 PSI

CONSTRUCTION

Contacts: Copper alloy, gold plated
Shell, jam nut: Aluminum or stainless steel, see How to Order
Insulators: Glass-filled thermoset epoxy
Face seal, peripheral seal: Fluorosilicone

INSERTION LOSS

	Insertion Loss dB minimum, 25°C		
	CX	CY	CZ
Frequency	80K-120K pF	40K-60K pF	30K-45K pF
1 MHz	22	16	13
10 MHz	41	36	33
100 MHz	56	53	52
500 -1000 MHz	60	57	57

Hermetic and Filter Receptacles
240-970 Filter Receptacle

240-970W SQUARE FLANGE

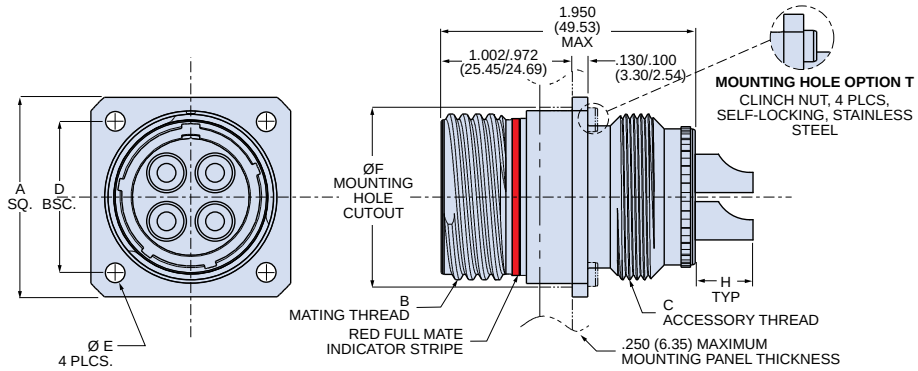

DIMENSIONS

Shell Size	A Sq. In.	A Sq. mm.	B Mating Thd	C Accessory Thd	D Bsc In.	D Bsc mm.	ø E In.	ø E mm.	E Clinch Nut Thd	ø F In.	ø F mm.
18	1.383	35.13	1.125-.1P-.3L-TS-2A	1.125-18 UNEF-2A	1.015	25.78	.146	3.71	6-32 UNC-2	1.187	30.15
20	1.508	38.30	1.250-.1P-.3L-TS-2A	1.250-18 UNEF-2A	1.140	28.96	.146	3.71	6-32 UNC-2	1.374	34.90
24	1.718	43.64	1.500-.1P-.3L-TS-2A	1.4375-18 UNEF-2A	1.281	32.54	.146	3.71	6-32 UNC-2	1.562	39.67
28	2.138	54.31	1.750-.1P-.3L-TS-2A	1.8125-16 UN-2A	1.568	39.83	.170	4.32	8-32 UNC-2	1.874	47.60
32	2.328	59.13	2.000-.1P-.3L-TS-2A	2.0625-16 UNS-2A	1.734	44.04	.170	4.32	8-32 UNC-2	2.062	52.37
36	2.578	65.48	2.250-.1P-.3L-TS-2A	2.250-16 UN-2A	1.984	50.39	.170	4.32	8-32 UNC-2	2.302	58.47
40	2.828	71.83	2.500-.1P-.3L-TS-2A	2.500-16 UN-2A	2.234	56.74	.170	4.32	8-32 UNC-2	2.562	65.07

240-970J JAM NUT

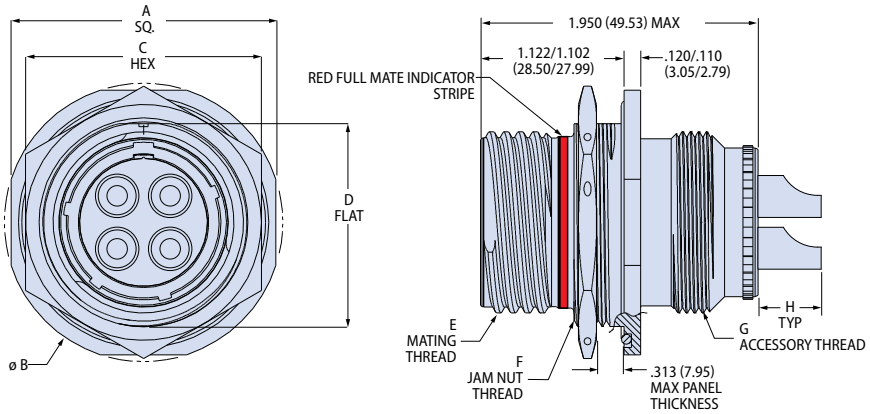

DIMENSIONS

Shell Size	A Sq. In.	A Sq. mm.	ø B In.	ø B mm.	C In.	C mm.	D Flat In.	D Flat mm.	E Mating Thd.	F Jam-Nut Thd.	G Accessory Thd.
18	1.639	41.63	1.733	44.02	1.438	36.53	1.212	31.06	1.125-.1P-.3L-TS-2A	1.250-18 UNEF-2A	1.125-18 UNEF-2A
20	1.827	46.41	1.921	48.79	1.625	41.28	1.399	35.81	1.250-.1P-.3L-TS-2A	1.4375-18 UNEF-2A	1.250-18 UNEF-2A
24	2.014	51.16	2.108	53.54	2.000	50.80	1.587	43.76	1.500-.1P-.3L-TS-2A	1.625-18 UNEF-2A	1.4375-18 UNEF-2A
28	2.327	59.11	2.425	61.60	2.188	55.58	1.899	48.51	1.750-.1P-.3L-TS-2A	1.9375-16 UN-2A	1.8125-16 UN-2A
32	2.513	63.83	2.607	66.24	2.375	60.33	2.084	52.93	2.000-.1P-.3L-TS-2A	2.125-16 UN-2A	2.0625-16 UNS-2A
36	2.763	70.18	2.857	72.57	2.625	66.68	2.323	59.00	2.250-.1P-.3L-TS-2A	2.375-16 UN-2A	2.250-16 UN-2A
40	3.013	76.53	3.107	78.92	2.875	73.03	2.548	64.72	2.500-.1P-.3L-TS-2A	2.625-16 UN-2A	2.500-16 UN-2A

SOLDER CUP DIMENSIONS

Contact Size	H Typ In. ± .025	H Typ mm. ± 0.64
12, 16	.500	12.70
8	.600	15.24
4, 1/0	.800	20.32

KEY POSITIONS

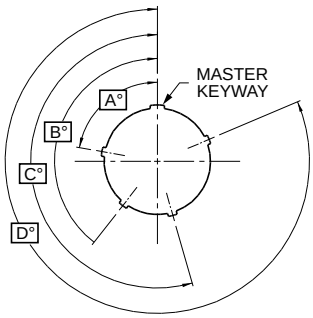

Position	A°	B°	C°	D°
1	80	142	196	293
2	135	170	200	310
3	49	169	200	244
4	66	140	200	257
5	62	145	180	280
6	79	153	197	272

240-970J JAM NUT PANEL CUTOUT

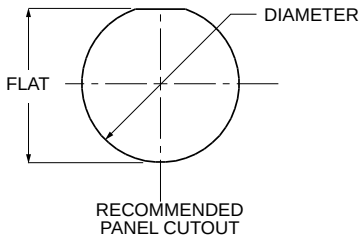

Shell Size	Diameter In. -0.0/+.010	Diameter mm. -0.0/+0.25	Flat In. -0.0/+.010	Flat mm. -0.0/+0.25
18	1.254	31.9	1.217	30.9
20	1.441	36.6	1.404	35.7
24	1.629	41.4	1.592	40.4
28	1.941	49.3	1.904	48.4
32	2.129	54.1	2.092	53.1
36	2.379	60.4	2.328	59.1
40	2.629	66.8	2.553	64.8

RECOMMENDED JAM NUT TORQUE

Shell Size	Min-Max (in-lb.)
18	80-85
20	100-110
24	110-120
28	145-155
32	170-180
36	190-200
40	210-220

© 2024 Glenair, Inc • 1211 Air Way, Glendale, CA 91201 • 818-247-6000 • www.glenair.com • U.S. CAGE code 06324 • Series 970 PowerTrip Connectors
Dimensions in Inches (millimeters) are subject to change without notice.

POWER TRIP®

970-045 Piston Sealed Straight Plug, Crimp, Rear Release

970-045 piston-seal waterproof plug has accessory thread for attaching strain relief clamps, backshells or adapters. Coupling threads are triple-start ACME quick disconnect. EMI protected with ground spring. Self-locking coupling nut resists loosening under vibration. Aluminum or stainless steel plug has five polarizing keys. Crimp rear-release contacts are packaged with connector. PowerTrip connectors feature low resistance LouverBand contacts and are sealed to withstand extreme environments.

- Piston-seal provides waterproof protection
- Overmolded assemblies tested to 1K psi
- Quick-disconnect self-locking aerospace-grade power connector
- 2000 VAC (DWV)
- -65° to +230°C
- EMI ground spring
- Crimp, rear-release contacts
- High shock, high vibration

INSERT ARRANGEMENTS

Insert Arr.	Contact Size and Quantity					
	#16	#12	#8	#4	#1/0	#2/0
18-2			2			
18-4		2	2			
20-3			3			
20-4			4			
20-5		2	3			
20-7	4		3			
24-1					1	
24-2				2		
24-3				3		
24-5			5			
24-6		4		2		
24-A1						1
24-A6		3		3		
28-12	6		6			
28-15	15					
28-4				4		
28-8		1	7			
28-9	5			4		
32-12	2		10			
32-2					2	
32-20	1	19				
32-3					3	
32-4				2	2	
32-5				5		
32-6		3			3	
32-7				7		
32-A22		22				
36-16	3		13			
36-2						2
36-4					4	
36-9	14	14	2	1		
36-A8				8		
36-B8	4				4	
40-10	16		9	4		
40-21			21			
40-5					5	

HOW TO ORDER

Sample Part Number → 970-045 | ME | 32 | -5 | P | 1 | A | -1

Basic Part Number	**970-045** Plug with Accessory Thread
Material/Finish	**ME** = Aluminum / Electroless Nickel **MT** = Aluminum / Nickel PTFE **NF** = Aluminum / Olive Drab Cadmium **ZR** = Aluminum / Black Zinc-Nickel **Z1** = Stainless Steel / Passivated **ZMT** = Stainless Steel / Nickel PTFE
Shell Size	See Dimensions Table
Insert Arrangement	See Insert Arrangements Table
Insert Designator	**P** = Pin Contact **S** = Socket Contact **A** = Pin Insulator less Pin Contacts **B** = Socket Insulator less Socket Contacts
Contact Plating	**1** = Silver (Sizes 8, 4, 0, 2/0 only) **2** = Gold (Applies to "P" and "S" Insert Designators only. Omit for "A" and "B" Designators.)
Shell Style	**A** = Accessory Thread **B** = Banding Platform
Key Position	**-1**, **-2**, **-3**, **-4**, **-5**, or **-6**

RATINGS

Voltage (DWV): 2000 Volts AC
Current: Size 16 contact 13 amps
Size 12 contact 23 amps
Size 8 contact 60 amps
Size 4 contact 100 amps
Size 1/0 contact 175 amps
Size 2/0 contact 205 amps
Operating temperature:
Matl/Finish Code Z1: -65° to +230°C
Codes ME, MT: -65° to +200°C
Codes: NF, TZ, ZR: -65° to +175 °C
EMI shielding effectiveness: 65 dB min. 100 MHz to 10 GHz
Shock: 50 g
Vibration: per MIL-DTL-38999 Series III
MIL-S-901 high impact shock: Grade A
Blowing sand and dust: MIL-STD-810, method 510.5
Altitude immersion: 75,000 feet
Ingress protection: IP67
Water pressure: 6 feet, 48 hours

CONSTRUCTION

Contacts: size #8 and larger: high conductivity copper alloy, gold or silver plated. Size #12, #16: copper alloy, gold plated
Shell: Aluminum or stainless steel, see How to Order
Coupling nut: Aluminum or stainless steel, see How to Order. Anti-decoupling spring: SST, passivated
Insulator: Glass-filled thermoset epoxy
Wire grommet, face seal, peripheral seal: Fluorosilicone/silicone blend
Contact Retention clip: Beryllium copper
Ground spring: Beryllium copper, nickel plated
Insert retainer ring: High-temperature thermoplastic
Coupling nut retainer ring: Beryllium copper, nickel plated

970-045 Piston Sealed Straight Plug, Crimp, Rear Release

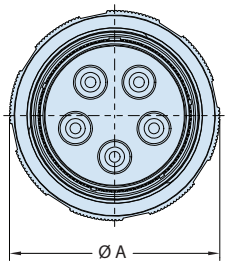

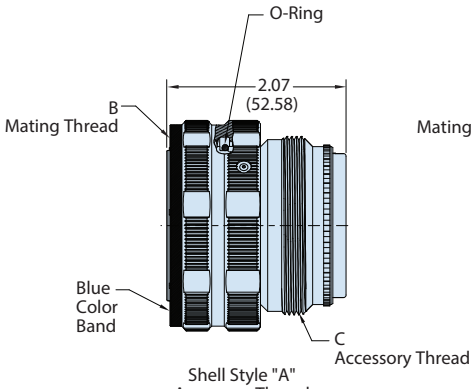

Shell Style "A"
Accessory Thread

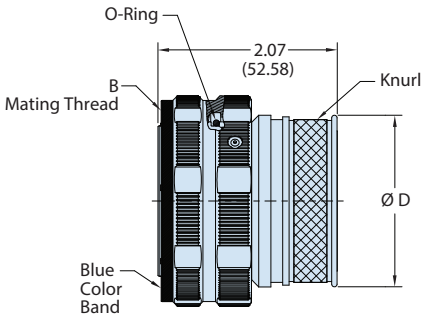

Shell Style "B"
Banding Platform

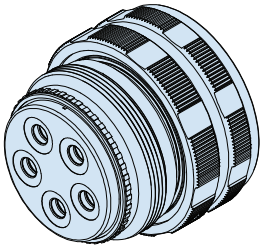

Shell Style "A"
Accessory Thread

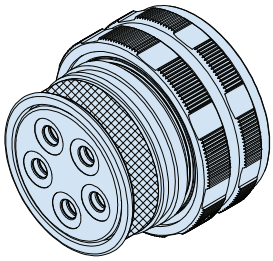

Shell Style "B"
Banding Platform

KEY POSITIONS

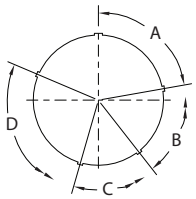

Position	A°	B°	C°	D°
1	80	142	196	293
2	135	170	200	310
3	49	169	200	244
4	66	140	200	257
5	62	145	180	280
6	79	153	197	272

DIMENSIONS

Shell Size	A		B Mating Thread	C Accessory Thread	D	
	In.	MM			In.	MM
18	1.485	37.72	1.125-0.1P-0.3L-TS-2B	1.125-18UNEF-2A	1.037	26.34
20	1.583	40.21	1.250-0.1P-0.3L-TS-2B	1.250-18UNEF-2A	1.163	29.54
24	1.857	47.17	1.500-0.1P-0.3L-TS-2B	1.4375-18UNEF-2A	1.350	34.29
28	2.186	55.52	1.750-0.1P-0.3L-TS-2B	1.8125-16UN-2A	1.670	42.42
32	2.420	61.47	2.000-0.1P-0.3L-TS-2B	2.0625-16UNS-2A	1.945	49.40
36	2.709	68.81	2.250-0.1P-0.3L-TS-2B	2.250-16UN-2A	2.176	55.27
40	2.980	75.69	2.500-0.1P-0.3L-TS-2B	2.500-16UN-2A	2.350	59.69

© 2024 Glenair, Inc • 1211 Air Way, Glendale, CA 91201 • 818-247-6000 • www.glenair.com • U.S. CAGE code 06324 • Series 970 PowerTrip Connectors
Dimensions in Inches (millimeters) are subject to change without notice.

POWER TRIP®

970-046 Piston Sealed Jam Nut Receptacle, Crimp Removable

970-046 piston-seal waterproof receptacle has accessory thread for attaching strain relief clamps, backshells or adapters. Coupling threads are triple-start ACME quick disconnect. EMI protected with ground spring. Self-locking coupling nut resists loosening under vibration. Aluminum or stainless steel plug has five polarizing keys. Crimp rear-release contacts are packaged with connector. PowerTrip connectors feature low resistance LouverBand contacts and are sealed to withstand extreme environments.

- Piston-seal provides waterproof protection
- Overmolded assemblies tested to 1K psi
- Quick-disconnect self-locking aerospace-grade power connector
- 2000 VAC (DWV)
- -65° to +230°C
- EMI ground spring
- Crimp, rear-release contacts
- High shock, high vibration

INSERT ARRANGEMENTS

Insert Arr.	Contact Size and Quantity					
	#16	#12	#8	#4	#1/0	#2/0
18-2			2			
18-4		2	2			
20-3			3			
20-4			4			
20-5		2	3			
20-7	4		3			
24-1					1	
24-2				2		
24-3				3		
24-5			5			
24-6		4		2		
24-A1						1
24-A6		3		3		
28-12	6		6			
28-15	15					
28-4				4		
28-8		1	7			
28-9	5			4		
32-12	2		10			
32-2					2	
32-20	1	19				
32-3					3	
32-4				2	2	
32-5				5		
32-6		3			3	
32-7				7		
32-A22		22				
36-16	3		13			
36-2						2
36-4					4	
36-9	14	14	2	1		
36-A8				8		
36-B8	4				4	
40-10	16		9	4		
40-21			21			
40-5					5	

HOW TO ORDER

Sample Part Number →	970-046	ME	32	-5	S	1	A	-1

Basic Part Number	**970-046** Jam nut receptacle
Material/Finish	**ME** = Aluminum / Electroless Nickel **MT** = Aluminum / Nickel PTFE **NF** = Aluminum / Olive Drab Cadmium **ZR** = Aluminum / Black Zinc-Nickel **Z1** = Stainless Steel / Passivated
Shell Size	See Dimensions Table
Insert Arrangement	See Insert Arrangements Table
Insert Designator	**P** = Pin Contact **S** = Socket Contact **A** = Pin Insulator less Pin Contacts **B** = Socket Insulator less Socket Contacts
Contact Plating	**1** = Silver (Sizes 8, 4, 0, 2/0 only) **2** = Gold (Applies to "P" and "S" Insert Designators only. Omit for "A" and "B" Designators.)
Shell Style	**A** = Accessory Thread **B** = Banding Platform
Key Position	**-1**, **-2**, **-3**, **-4**, **-5**, or **-6**

RATINGS

Voltage (DWV): 2000 Volts AC
Current: Size 16 contact 13 amps
Size 12 contact 23 amps
Size 8 contact 60 amps
Size 4 contact 100 amps
Size 1/0 contact 175 amps
Size 2/0 contact 205 amps
Operating temperature:
Matl/Finish Code Z1: -65° to +230°C
Codes ME, MT: -65° to +200°C
Codes: NF, TZ, ZR: -65° to +175 °C
EMI shielding effectiveness: 65 dB min. 100 MHz to 10 GHz
Shock: 50 g
Vibration: per MIL-DTL-38999 Series III
MIL-S-901 high impact shock: Grade A
Blowing sand and dust: MIL-STD-810, method 510.5
Altitude immersion: 75,000 feet
Ingress protection: IP67
Water pressure: 6 feet, 48 hours

CONSTRUCTION

Contacts: size #8 and larger: high conductivity copper alloy, gold or silver plated. Size #12, #16: copper alloy, gold plated
Shell: Aluminum or stainless steel, see How to Order
Coupling nut: Aluminum or stainless steel, see How to Order. Anti-decoupling spring: SST, passivated
Insulator: Glass-filled thermoset epoxy
Wire grommet, face seal, peripheral seal: Fluorosilicone/silicone blend
Contact Retention clip: Beryllium copper
Ground spring: Beryllium copper, nickel plated
Insert retainer ring: High-temperature thermoplastic
Coupling nut retainer ring: Beryllium copper, nickel plated

970-046 Piston Sealed Jam Nut Receptacle, Crimp Removable

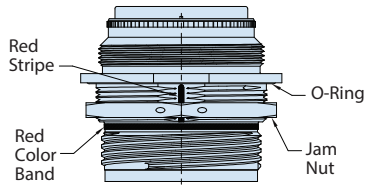

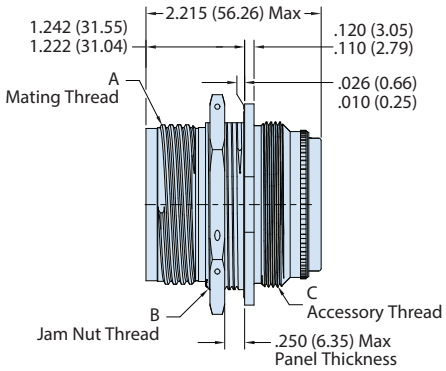

Shell Style "A"
Accessory Thread

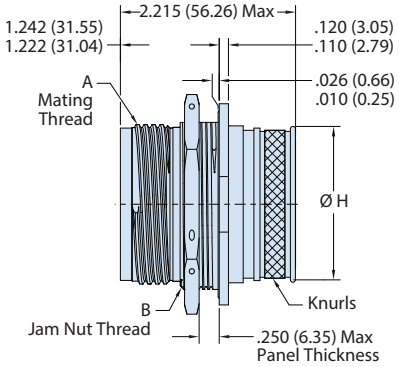

Shell Style "B"
Banding Platform

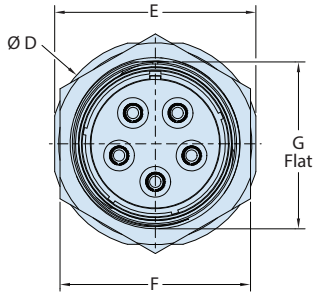

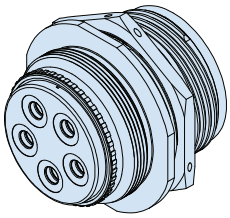

Shell Style "A"
Accessory Thread

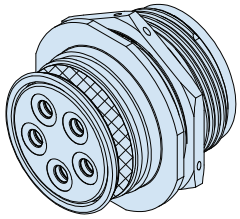

Shell Style "B"
Banding Platform

DIMENSIONS

Shell Size	A Mating Thread	B Jam Nut Thread	C Accessory Thread	Ø D In.	Ø D MM	E In.	E MM	F In.	F MM	G In.	G MM	Ø H In.	Ø H MM	Ø J Mtg. Hole 0.010 / 0.000 In.	Ø J Mtg. Hole 0.25 / 0.00 MM	K Hole Flat 0.010 / 0.000 In.	K Hole Flat 0.25 / 0.00 MM
18	1.125-0.1P-0.3L-TS-2A	1.250-18UNEF-2A	1.125-18UNEF-2A	1.733	44.02	1.639	41.63	1.438	36.53	1.212	30.78	1.037	26.34	1.265	32.13	1.217	30.91
20	1.250-0.1P-0.3L-TS-2A	1.4375-18UNEF-2A	1.250-18UNEF-2A	1.921	48.79	1.827	46.41	1.625	41.28	1.399	35.53	1.163	29.54	1.452	36.88	1.409	35.79
24	1.500-0.1P-0.3L-TS-2A	1.625-18UNEF-2A	1.4375-18UNEF-2A	2.108	53.54	2.014	51.16	1.822	46.28	1.587	40.31	1.350	34.29	1.640	41.66	1.596	40.54
28	1.750-0.1P-0.3L-TS-2A	1.9375-16UN-2A	1.8125-16UN-2A	2.425	61.60	2.327	59.11	2.188	55.58	1.899	48.23	1.670	42.42	1.952	49.58	1.910	48.51
32	2.000-0.1P-0.3L-TS-2A	2.125-16UN-2A	2.0625-16UNS-2A	2.607	66.22	2.513	63.83	2.375	60.33	2.084	52.93	1.945	49.40	2.140	54.36	2.092	53.14
36	2.250-0.1P-0.3L-TS-2A	2.375-16UN-2A	2.250-16UN-2A	2.857	72.57	2.763	70.18	2.625	66.68	2.323	59.00	2.176	55.27	2.390	60.71	2.342	59.49
40	2.500-0.1P-0.3L-TS-2A	2.625-16UN-2A	2.500-16UN-2A	3.107	78.92	3.013	76.53	2.875	73.03	2.548	64.72	2.350	59.69	2.640	67.06	2.557	64.95

KEY POSITIONS

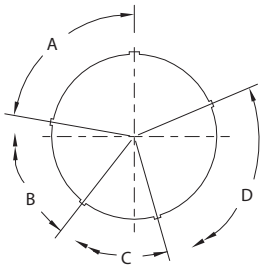

Position	A°	B°	C°	D°
1	80	142	196	293
2	135	170	200	310
3	49	169	200	244
4	66	140	200	257
5	62	145	180	280
6	79	153	197	272

PANEL CUTOUT

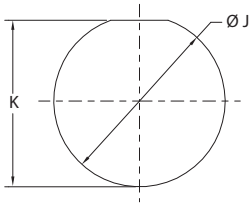

RECOMMENDED PANEL HOLE

© 2024 Glenair, Inc • 1211 Air Way, Glendale, CA 91201 • 818-247-6000 • www.glenair.com • U.S. CAGE code 06324 • Series 970 PowerTrip Connectors
Dimensions in Inches (millimeters) are subject to change without notice.

POWERLINE TYPE

AC/DC LINE-TO-LINE FILTER RECEPTACLES

Powerline Filters with Common Mode Chokes and Line-To-Line Filtering

Contact factory for high-performance, low heat dissipation powerline filtering

Powerline filters suited for filtering DC and AC mains services are typically designed to incorporate both common-mode and differential-mode filters (line-to-line). Common mode chokes capable of screening both incoming and outgoing noise and transients (see example schematic) are ideally suited for incorporation in Series 970 PowerTrip® filter connectors. All multiple-line filters employ modern filter elements incorporating compensating inductors or coupled chokes. PowerTrip powerline filters are typically supplied as made-to-order (bespoke) solutions. Please contact the factory for application engineering assistance.

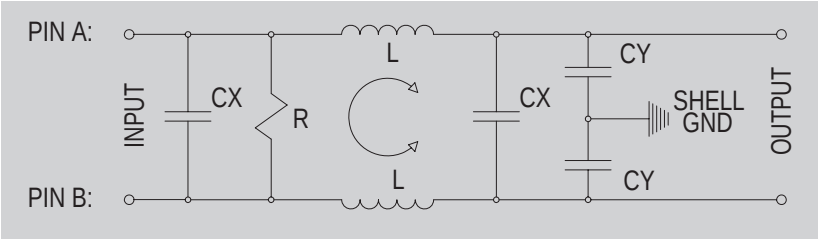

Contacts and Tools
Crimp Contacts

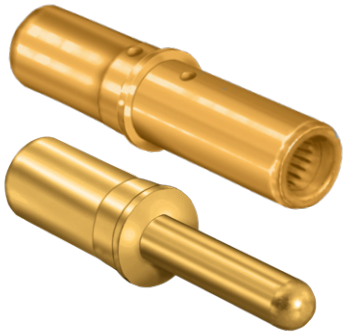

Series 970 PowerTrip® contacts for size 16 through 2/0 wire. Size 8, 4, 1/0, and 2/0 contacts are high conductivity copper alloy (IACS >90%) with silver or gold plating. Size #12 and #16 contacts are copper alloy with gold finish. Size 2/0, 1/0, 4 and 8 socket contacts feature low resistance, high durability LouverBand springs. Terminate to wire with standard crimp tools. Contacts are snap-in, rear-release and meet the performance requirements of SAE AS39029.

- Contacts for Series 970 PowerTrip connectors
- Crimp rear-release
- High conductivity copper alloy
- LouverBand socket contacts
- Gold or silver plating

CONSTRUCTION	
Pin, Size #16 and #12	Copper alloy, gold over palladium finish
Pin, Size #8, #4, #1/0, and #2/0	High conductivity copper alloy, gold or silver finish over nickel
Socket, Size #16 and #12	Copper alloy, stainless steel hood, gold over palladium finish
Socket, Size #8, #4, #1/0, and 2/0	High conductivity copper alloy, beryllium copper LouverBand spring, gold or silver finish over nickel

850-037-16 *#16 PIN*

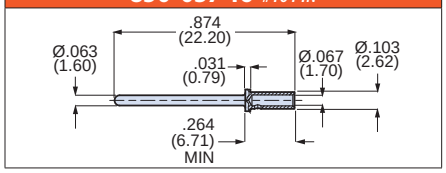

850-038-16 *#16 SKT*

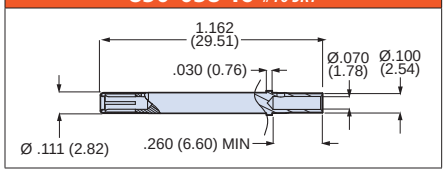

850-037-12 *#12 PIN*

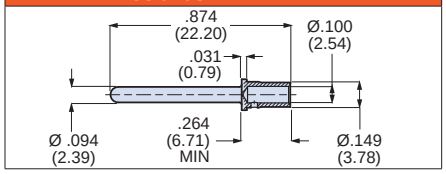

850-038-12 *#12 SKT*

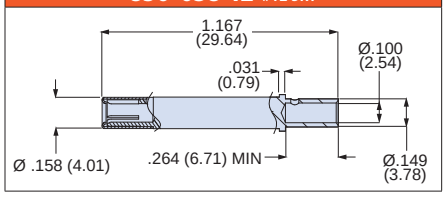

CRIMP CONTACT PART NUMBERS								
Size	Wire Size	Plating	Pin Contact Part Number	Socket Contact Part Number	Crimp Tool	Positioner	Die Set	Locator
16	#16–#20	Gold	850-037-16	850-038-16	809-136	859-032	—	—
12	#12–#14	Gold	850-037-12	850-038-12	809-136	859-032	—	—
8	#8	Silver	850-026-8-8-1	850-027-8-8-1	859-025	—	859-026	859-029
		Gold	850-026-8-8-2	850-027-8-8-2	859-025	—	859-026	859-029
	#10	Silver	850-026-8-10-1	850-027-8-10-1	859-025	—	859-026	859-173
		Gold	850-026-8-10-2	850-027-8-10-2	859-025	—	859-026	859-173
4	#4	Silver	850-026-4-4-1	850-027-4-4-1	859-025	—	859-027	859-030
		Gold	850-026-4-4-2	850-027-4-4-2	859-025	—	859-027	859-030
	#6	Silver	850-026-4-6-1	850-027-4-6-1	859-025	—	859-027	859-030
		Gold	850-026-4-6-2	850-027-4-6-2	859-025	—	859-027	859-030
1/0	#1/0	Silver	850-026-0-0-1	850-027-0-0-1	859-025	—	859-028	859-031
		Gold	850-026-0-0-2	850-027-0-0-2	859-025	—	859-028	859-031
	#2	Silver	850-026-0-2-1	850-027-0-2-1	859-025	—	859-028	859-031
		Gold	850-026-0-2-2	850-027-0-2-2	859-025	—	859-028	859-031
2/0	#2/0	Silver	850-184-00-00-1	850-185-00-00-1	859-025	—	859-217	859-218
	#2/0	Gold	850-184-00-00-2	850-185-00-00-2	859-025	—	859-217	859-218

850-026-8-8 *#8 PIN*

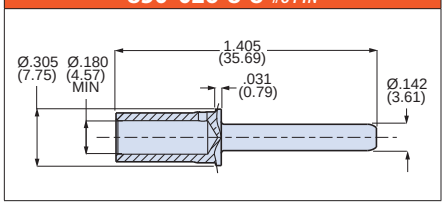

850-026-8-10 *#810 PIN*

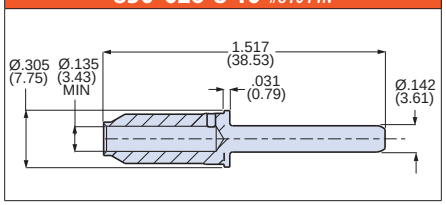

850-027-8-8 *#8 SKT*

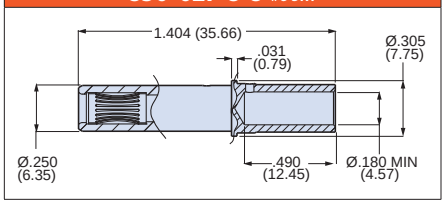

850-027-8-10 *#810 SKT*

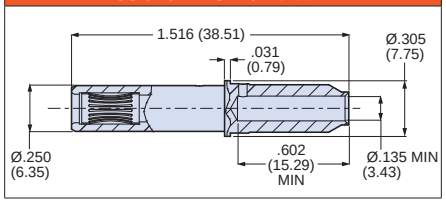

© 2024 Glenair, Inc • 1211 Air Way, Glendale, CA 91201 • 818-247-6000 • www.glenair.com • U.S. CAGE code 06324 • Series 970 PowerTrip Connectors
Dimensions in Inches (millimeters) are subject to change without notice.

Contacts and Tools
Crimp Contacts

850-026-4-4 #4 PIN

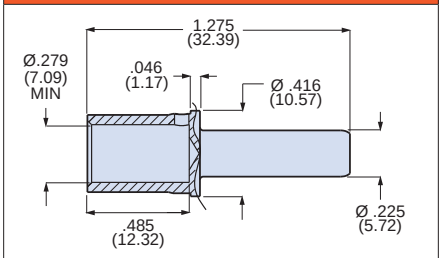

850-026-4-6 #4 PIN

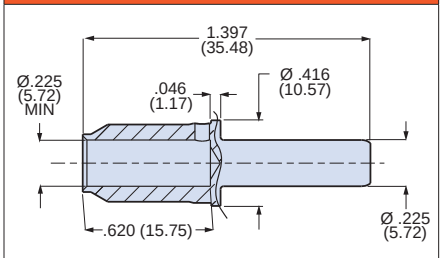

850-027-4-4 #4 SKT

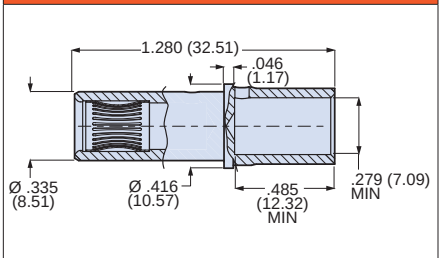

850-027-4-6 #4 SKT

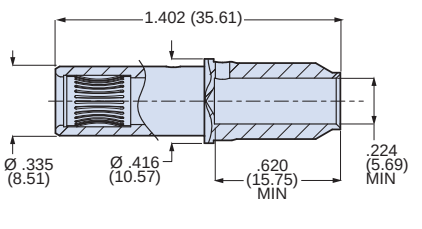

850-026-0-0 #1/0 PIN

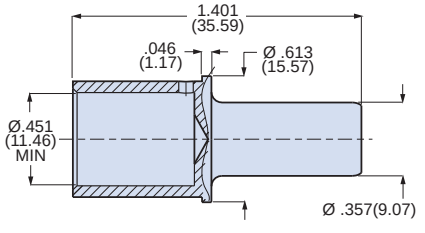

850-026-0-2 #1/0 PIN

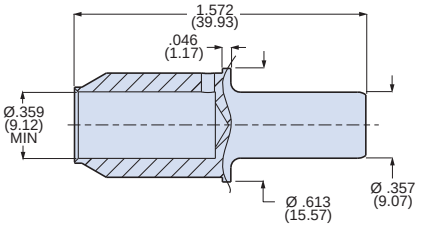

850-027-0-0 #1/0 SKT

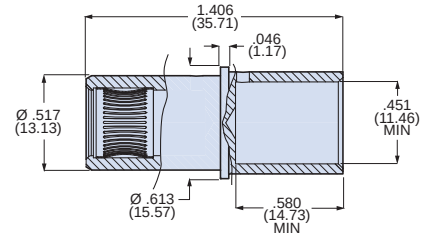

850-027-0-2 #1/0 SKT

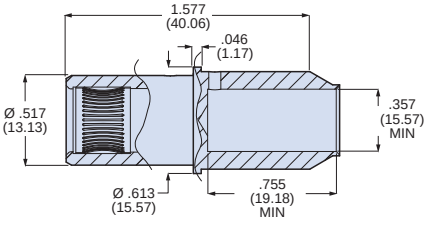

850-184-00-00 #2/0 PIN

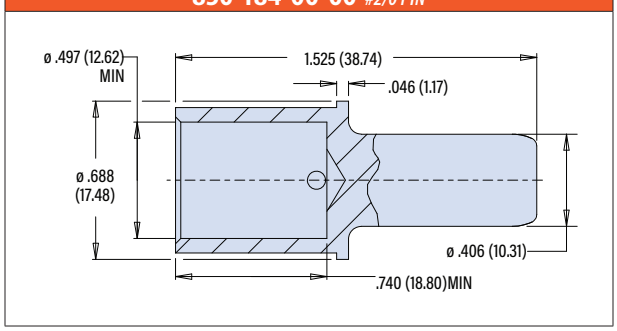

850-185-00-00 #2/0 SKT

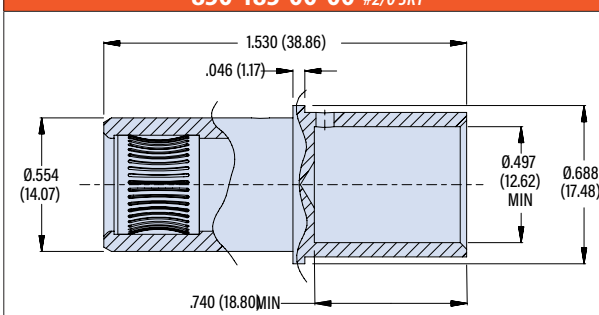

Contacts, Tools and Accessories
850-311, 850-312 Bus Bar/Lug Contact

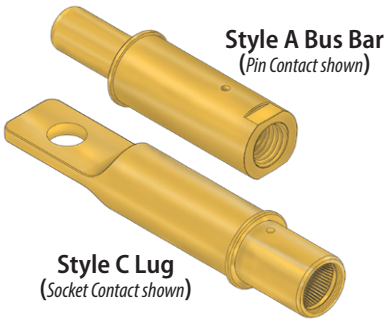

850-311/312 contacts are used to attach PowerTrip connectors directly to bus bars and jumpers. Two contact types: Style A has internal thread, style C has lug. Contacts are compatible with Series 970 PowerTrip connectors. Contacts snap into connector body and can be removed using standard Series 970 insertion/extraction tools. High conductivity copper alloy, gold or silver plated.

- Contacts for Series 970 PowerTrip connectors
- (2) styles: lug and bus bar
- High conductivity copper alloy
- LouverBand socket contacts
- Gold or silver plating

850-311 STYLE A BUS BAR PIN CONTACT

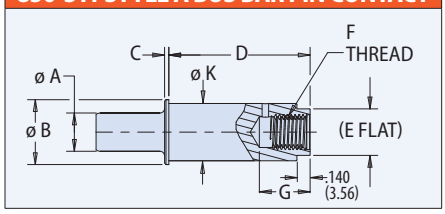

850-311 STYLE C LUG PIN CONTACT

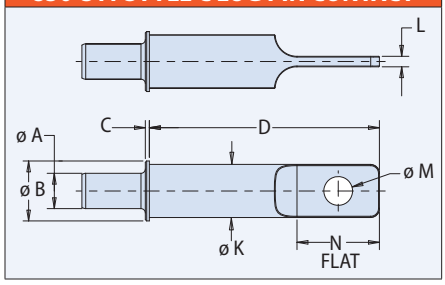

850-312 STYLE A BUS BAR SOCKET CONTACT

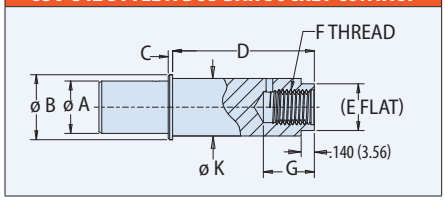

850-312 STYLE C LUG SOCKET CONTACT

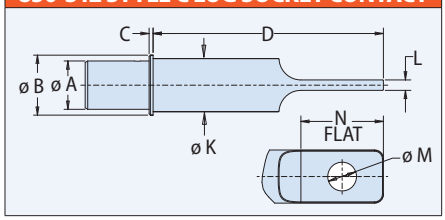

STYLE A SUGGESTED HARDWARE TORQUE

Thread Size	Torque (IN-LB)
5/16-24 UNF	90-140
10-32 UNF	20-29
8-36 UNF	11-19

BUS BAR/LUG CONTACT PART NUMBERS

Termination Style		Size	Silver Plating	Gold Plating
A Bus Bar *Internal Thread*	Pin 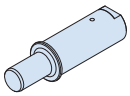	8	850-311-8-A-1	850-311-8-A-2
		4	850-311-4-A-1	850-311-4-A-2
		0	850-311-0-A-1	850-311-0-A-2
		00	850-311-00-A-1	850-311-00-A-2
	Skt 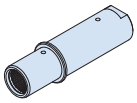	8	850-312-8-A-1	850-312-8-A-2
		4	850-312-4-A-1	850-312-4-A-2
		0	850-312-0-A-1	850-312-0-A-2
		00	850-312-00-A-1	850-312-00-A-2
C Lug	Pin 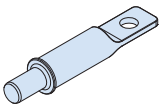	8	850-311-8-C-1	850-311-8-C-2
		4	850-311-4-C-1	850-311-4-C-2
		0	850-311-0-C-1	850-311-0-C-2
		00	850-311-00-C-1	850-311-00-C-2
	Skt 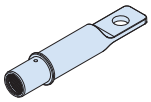	8	850-312-8-C-1	850-312-8-C-2
		4	850-312-4-C-1	850-312-4-C-2
		0	850-312-0-C-1	850-312-0-C-2
		00	850-312-00-C-1	850-312-00-C-2

DIMENSIONS

Contact Size	ø A 850-311 Pin	ø A 850-312 Skt	ø B	C	D Style A	D Style C	E Flat	F Thread UNF-2B	G	ø K	L	ø M	N Flat
00	.406 (10.31)	.554 (14.07)	.69 (17.53)	.046 (1.17)	1.500 (38.10)	2.640 (67.05)	.500 (12.7)	5/16-24	.539 (13.69)	.609 (15.47)	.120 (3.05)	.330 (8.38	.946 (24.03)
0	.357 (9.07)	.517 (13.13)	.61 (15.49)	.046 (1.17)	1.376 (34.95)	2.406 (61.11)	.500 (12.7)	5/16-24	.539 (13.69)	.563 (13.69)	.115 (2.92)	.330 (8.38)	.836 (21.23)
4	.225 (5.72)	.335 (8.51)	.42 (10.67)	.046 (1.17)	1.376 (34.95)	2.122 (53.90)	.3125 (7.94)	10-32	.460 (11.68)	.386 (9.80)	.085 (2.16)	.198 (5.03)	.552 (14.02)
8	.142 (3.61)	.250 (6.35)	.31 (7.87)	.031 (0.79)	1.277 (32.44)	1.889 (47.98)	.250 (6.35)	8-36	.407 (10.34)	.276 (7.01)	.075 (1.91)	.173 (4.39)	.468 (11.89)

CONTACT DIMENSIONS INSTALLED IN CONNECTOR

Contact Size	Square Flange Receptacle (ref: 970-003) J1 Style A Int. Thd. ± .025 (0.64) In.	J1 mm.	J2 Style C Lug ± .025 (0.64) In.	J2 mm.	Jam Nut Receptacle (ref: 970-004) J1 Style A Int. Thd. ± .025 (0.64) In.	J1 mm.	J2 Style C Lug ± .025 (0.64) In.	J2 mm.
00	1.356	34.4	2.496	63.4	1.231	31.3	2.371	60.2
0	1.232	31.3	2.262	57.5	1.107	28.1	2.137	54.3
4	1.232	31.3	1.978	50.2	1.107	28.1	1.853	47.1
8	1.232	31.3	1.844	46.8	1.107	28.1	1.719	43.7

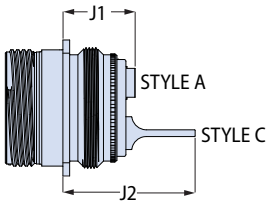

© 2024 Glenair, Inc • 1211 Air Way, Glendale, CA 91201 • 818-247-6000 • www.glenair.com • U.S. CAGE code 06324 • Series 970 PowerTrip Connectors
Dimensions in Inches (millimeters) are subject to change without notice.

Contacts, Tools and Accessories
Contact Crimping Tools, Sealing Plugs, Assembly Tools

CRIMP TOOL FOR SIZE #00 - #8 CONTACTS

Bench mount pneumatic crimp tool. Heavy duty, four-indent crimp termination. Attach to air supply with quick-disconnect fitting or install 1/4 NPT fitting into tapped port. 90-120 psi air supply. Requires die assembly and locator, sold separately. Hand actuate with push-button valve trigger on handle. Steel with black wrinkle enamel coating. 13 inches overall length, 9.2 inches tall, 17 pounds (7.7 Kg).

Part Number	SAE Part Number
859-025	M22520/23-01

DIE ASSEMBLY

Indenter Die Assembly. Precision four-indent die with hardened tool steel indenters, stainless steel housing. Separate die assembly required for each contact size.

Contact Size	Part Number	SAE Part Number
8	859-026	M22520/23-02
4	859-027	M22520/23-04
1/0	859-028	M22520/23-05
2/0	859-217	M22520/23-06

LOCATOR

Aluminum locator holds contact at correct depth. Use with 809-025 (M22520/23-01) pneumatic crimper.

Contact Size	Wire Size	Part Number	SAE Part Number
8	#10	859-173	—
8	#8	859-029	M22520/23-09
4	#4–6	859-030	M22520/23-11
1/0	#1/0–2	859-031	M22520/23-13
2/0	#2/0	859-218	M22520/23-15

CRIMP TOOL FOR SIZE #12 - #20 CONTACTS

Mil spec hand crimp tool with adjustable intenters for size 12 to size 20 contacts. Requires turret-type positioner, sold separately. 9.75 inches OAL, 1.25 pounds.

Part Number	SAE Part Number
809-136	M22520/1-01

POSITIONER

Mil spec positioner for 809-136 crimp tool. Rotating turret has three positions: red (#20 contacts), blue (#16) and yellow (#12). Data plate has crimp tool setting information based on contact size and wire gauge.

Part Number	SAE Part Number
859-032	M22520/1-02

MS28488 SEALING PLUGS

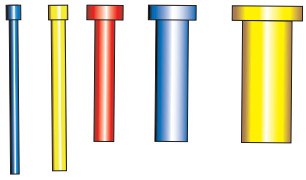

Install sealing plugs in unwired connector cavities to prevent moisture intrusion. These thermoplastic sealing plugs are rated for +200 °C continuous operating temperature.

Size	Color	Part Number	MS Part Number
16	Blue	859-036	MS27488-16-3
12	Yellow	859-037	MS27488-12-3
8	Red	859-038	MS27488-8-3
4	Blue	859-039	MS27488-4-3
1/0	Yellow	859-040	MS27488-0-3

When installing sealing plugs in connector grommets, the head of the sealing plug shall be inserted first. The sealing plug is designed for use with an unwired contact installed in connector applications. The sealing plug shall be pushed into the grommet until the head is positioned against the end of the unwired contact.

PLASTIC CONTACT REMOVAL TOOL

Remove wired contacts from connector with plastic tool. Similar to M81969/14 tools except with extended length to improve ease of use with Series 970 PowerTrip connectors. Delrin material.

Size	Color	Part Number
16	Blue	859-136-16
12	Yellow	859-136-12
8	Red	859-136-08
4	Blue	859-136-04

#12 AND 16 INSTALLING AND REMOVAL TOOLS

Durable steel tool installs or removes wired contacts from Series 970 connector. For size 12 and 16 contacts.

Size	Installation Tool Part Number	Removal Tool Part Number
16	859-141 *(M81869/8-208)*	859-143 *(M81869/8-207)*
12	859-140 *(M81869/8-210)*	859-142 *(M81869/8-209)*

#2/0, 1/0, 4, 8 CONTACT REMOVAL PLIERS

Stainless steel pliers removes wired contacts from Series 970 connector. For #2/0, #1/0, #4 and #8 contacts.

Size	Part Number	SAE Part Number
2/0	859-225	–
1/0	859-137	M81969/15-03
4	859-138	M81969/15-02
8	859-139	M81969/15-01

Band-Master ATS®

For more information on the Band-Master ATS EMI shield termination system, including instruction manuals and calibration details:
https://www.glenair.com/bandmaster/

Terminate cable braid shield with stainless steel Band-Master ATS® bands. Install band with hand tool or bench-mounted pneumatic tool. Bands are available in three widths: ***Standard*** (.24 inch), ***Micro*** (.12 inch) and ***Nano*** (.075 inch). ***Slim Standard*** and ***Micro Slim*** bands have reduced thickness for weight reduction. Hardened steel ***Micro-Max*** bands have 60% more tensile strength than standard Micro bands. Available flat or pre-coiled, bands are 304 series stainless steel, passivated.

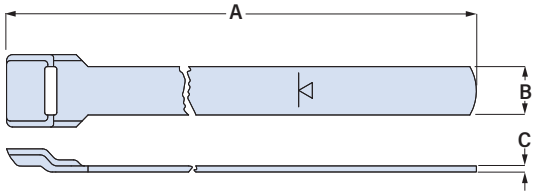

BAND PART NUMBERS										
Band Size	A Length in	A Length mm	Fits up to Dia. in	Fits up to Dia. mm	B Width in	B Width mm	C Thickness in	C Thickness mm	Part Number Pre-coiled Band	Hand Tool Part Number
Standard	9	228	1.00	25.4	.24	6.1	.02	0.5	601-006	601-100
	14	355	1.80	45.7	.24	6.1	.02	0.5	601-041	
	18	457.	2.50	63.5	.24	6.1	.02	0.5	601-050	
Slim Standard	9	228	.94	23.9	.24	6.1	.01	0.3	601-571	601-109
	14	355	1.80	45.7	.24	6.1	.01	0.3	601-573	
Micro	5	127	.50	12.7	.12	3.0	.015	0.4	601-025	601-101
	8	203	.88	22.4	.12	3.0	.015	0.4	601-061	
	14	356	1.88	47.7	.12	3.0	.015	0.4	601-065	
Micro Slim	8	203	.88	22.4	.12	3.0	.01	0.3	601-601	601-122
	14	356	1.88	47.7	.12	3.0	.01	0.3	601-603	
Micro-Max	8	203	.88	22.4	.12	3.0	.015	0.4	601-701	601-129
	14	356	1.88	47.7	.12	3.0	.015	0.4	601-703	
Nano	6	152	.60	15.2	.075	1.9	.009	0.9	601-501	601-108
	9	229	.94	23.9	.075	1.9	.009	0.9	601-505	
	14	356	1.80	45.7	.075	1.9	.009	0.9	601-509	

Hand Tool for Band Installation
Glenair Band-Master ATS tools are equipped with a built-in counter to ensure required recalibration is performed in accordance with military and commercial aerospace requirements.

PNEUMATIC BANDING TOOL PART NUMBERS		
Band Size		Part Number
Standard	Standard pneumatic banding tool with counter	601-106
Slim Standard	Slim Standard pneumatic banding tool with counter	601-110
Micro	Micro pneumatic banding tool with counter	601-107
Micro Slim	Micro Slim pneumatic banding tool with counter	601-123
Micro-Max	Micro-Max pneumatic banding tool with counter	601-130
Nano	Nano pneumatic banding tool with counter	601-118

High Volume Pneumatic Tool

© 2024 Glenair, Inc • 1211 Air Way, Glendale, CA 91201 • 818-247-6000 • www.glenair.com • U.S. CAGE code 06324 • Series 970 PowerTrip Connectors
Dimensions in Inches (millimeters) are subject to change without notice.

600P005 CONNECTOR HOLDING TOOL

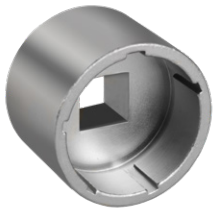

Holding tool prevents rotation of connector when installing backshell or adapter. 3/8" square drive. Fits Series 970 PowerTrip® connectors. Heat-treated steel with nickel plating.

PLUG HOLDING TOOL

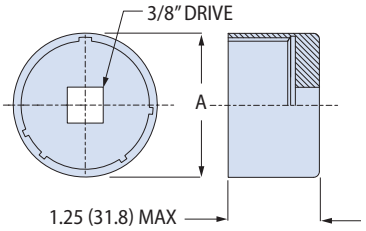

Shell Size	Part Number	A Max in	A Max mm
18	600P005-18P✻	1.075	27.3
20	600P005-20P✻	1.220	31.0
24	600P005-24P✻	1.450	36.8
28	600P005-28P✻	1.700	43.2
32	600P005-32P✻	1.950	49.5
36	600P005-36P✻	2.200	55.9
40	600P005-40P✻	2.450	62.2

RECEPTACLE HOLDING TOOL

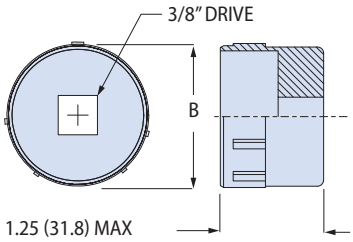

Shell Size	Part Number	B Max in	B Max mm
18	600P005-18R✻	.870	22.1
20	600P005-20R✻	1.035	26.3
24	600P005-24R✻	1.220	31.0
28	600P005-28R✻	1.515	38.5
32	600P005-32R✻	1.740	44.2
36	600P005-36R✻	1.990	50.5
40	600P005-40R✻	2.240	56.9

Replace ✻ with polarizing position 1, 2, 3, 4, 5, or 6

BACKSHELL ASSEMBLY TOOLS

Glenair assembly tools accomplish proper tightening of adapters and backshells. Torque wrenches, soft jaw pliers, strap wrenches, and circular wrenches speed up assembly and prevent damage to connectors and backshells.

Interconnect Cable Assembly Tools Catalog has assembly tools, shield termination tools, fiber optic termination tools. Contact Glenair or go to *www.glenair.com*.

***600G161** Digital Torque Wrench with **600-162BW** vertical bench mount stand (sold separately)*

Backshells and Accessories
Selection Guide

Strain Reliefs

Saddle Clamp
620PS076
Page 69

Swing-Arm
870P001
Page 70

Shrink Boots and Adapters

Shrink Boot Adapter
310-001
Page 71

Heatshrink Boots
770-003
Page 72

Backshells

Environmental Backshell
370-024
Page 73

EMI Backshell
380-105
Page 75

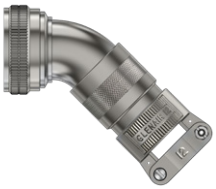

EMI + Environmental Backshell
390P*055
Page 77

Banding Backshell
440-069
Page 79

Heavy Duty Backshell with Saddle Clamp
390PS036
Page 81

Heavy Duty Backshell with Wire Mesh Cordgrip
390PS086
Page 82

Protective Covers

Plug Cover
660PS097
Page 83

Receptacle Cover
660PS098
Page 84

Bean Rubber Covers

Plug Cover
780-001
Page 85

Receptacle Cover
780-002
Page 86

Flange Gasket

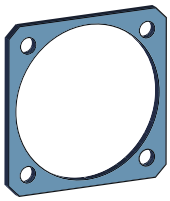

Flange Gasket
930-014
Page 87

Self-Locking Jam Nut

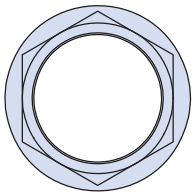

Self-Locking Jam Nut
809-532
Page 88

© 2024 Glenair, Inc • 1211 Air Way, Glendale, CA 91201 • 818-247-6000 • www.glenair.com • U.S. CAGE code 06324 • Series 970 PowerTrip Connectors
Dimensions in Inches (millimeters) are subject to change without notice.

Backshells and Accessories
620PS076 Strain Relief Clamp

Self-Locking

620PS076 heavy-duty clamp fits Glenair Series 970 PowerTrip® connectors. Anti-decoupling mechanism provides audible detented coupling and prevents backoff under high vibration. Saddles have self-locking stainless steel clinch nuts. Rigid dielectric bushing provides additional wire support (not available for all insert patterns). Full radius saddles are intended to be fully closed (bottomed onto frame).

- **Heavy duty saddle clamp for Series 970 PowerTrip® connectors**
- **Self-locking coupling nut**
- **Self-locking SST clinch nuts**
- **For unshielded wire bundles**

CONSTRUCTION

Coupling nut, body, saddles: aluminum or SST
Screws: stainless steel/passivated
Clinch nuts: stainless steel/silver
Anti-decoupling spring: thermoplastic (aluminum body) or SST (SST body)
Wire support bushing: Delrin

WIRE SUPPORT BUSHING

Optional wire support bushing holds wires in place. Available for insert arrangements with size 8, 4 and 1/0 contacts. Not available for layouts with size #12 or #16 contacts.

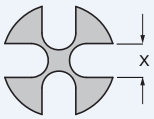

Wire Size	X (Ref.) In.	X (Ref.) mm.
8 AWG	.217	5.51
4 AWG	.331	8.41
1/0 AWG	.500	12.70

INSTALLATION TORQUE

Shell Size	Recommended Installation Torque Inch-Pounds ± 5
18	116
20, 24	136
28, 32, 36	148
40	164

HOW TO ORDER

Sample Part Number →	**620PS076**	**ME**	**32**	**T**

Basic Number	**620PS076** = Saddle Clamp Strain Relief for Series 970 Powertrip Connector
Material / Finish	**ME** = Aluminum / Electroless Nickel **MT** = Aluminum / Nickel PTFE **NF** = Aluminum / Olive Drab Cadmium **TZ** = Aluminum / Tin-Zinc **ZR** = Aluminum / Black Zinc-Nickel **Z1** = Stainless Steel / Passivated
Shell Size	**18 20 24 28 32 36 40**
Wire Support Bushing	**Omit** if not required **B2** = Two Slot Bushing (*for arr. 18-2, 24-2, 32-2*) **B3** = Three Slot Bushing (*for arr. 20-3, 24-3, 32-3*) **B4** = Four Slot Bushing (*for arr. 20-4, 28-4, 36-4*) **B5** = Five Slot Bushing (*for arr. 24-5, 32-5, 40-5*)

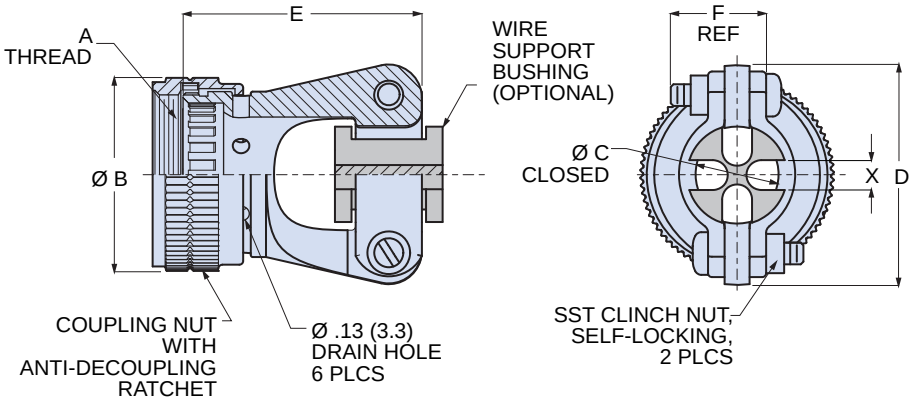

DIMENSIONS

Shell Size	A Thread	ø B Max. In.	ø B Max. mm.	C ± .031 (0.79) In.	C ± .031 (0.79) mm.	D Max. In.	D Max. mm.	E Max. In.	E Max. mm.	F Ref. In.	F Ref. mm.
18	1.125-18 UNEF-2B	1.390	35.3	.518	13.2	1.500	38.1	1.830	46.5	.630	16.0
20	1.250-18 UNEF-2B	1.530	38.9	.665	16.9	1.687	42.8	1.830	46.5	.630	16.0
24	1.4375-18 UNEF-2B	1.720	43.7	.795	20.2	1.921	48.8	2.030	51.6	.630	16.0
28	1.8125-16 UN-2B	2.130	54.1	1.080	27.4	2.355	59.8	2.130	54.1	.750	19.1
32	2.0625-16 UNS-2B	2.350	59.7	1.200	30.5	2.716	69.0	2.530	64.3	.880	22.4
36	2.250-16 UN-2B	2.590	65.8	1.400	35.6	2.869	72.9	2.530	64.3	.880	22.4
40	2.500-16 UN-2B	2.870	72.9	1.700	43.2	3.066	77.9	2.530	64.3	.880	22.4

Backshells and Accessories

870P001 Swing-Arm Cable Clamp

Self-Locking

Self-locking, adjustable arms. 870P001 Swing-Arm saddle clamp fits Glenair Series 970 PowerTrip connectors. Use with unshielded wire bundles. Adjustable arms pivot to 0°, 45° or 90° positions. Self-locking hardware. Optional Delrin bushing provides extra wire support. Available in aluminum or stainless steel.

CONSTRUCTION

Coupling nut, body, arms, saddles: aluminum or SST

Hardware: stainless steel/passivated

Anti-decoupling spring: thermoplastic (aluminum body) or SST (SST body)

Wire support bushing: Delrin

WIRE SUPPORT BUSHING

Optional wire support bushing holds wires in place. Available for insert arrangements with size 8, 4 and 1/0 contacts.

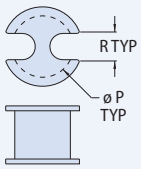

Order No.	øP in	øP mm	R in	R mm
18-2	.518	13.2	.225	5.7
20-3	.665	16.9	.215	5.5
20-4	.665	16.9	.225	5.7
24-2	.795	20.2	.342	8.7
24-3	.795	20.2	.341	8.7
24-5	.795	20.2	.225	5.7
28-4	1.080	27.4	.341	8.7
32-2	1.200	30.5	.508	12.9
32-3	1.200	30.5	.508	12.9
32-5	1.200	30.5	.341	8.7
36-4	1.400	35.6	.508	12.9
40-5	1.700	43.2	.508	12.9

HOW TO ORDER

	Sample Part Number →	**870P001**	**ME**	**24**	**-2**
Basic Number	**870P001** = SwingArm Saddle Clamp Strain Relief for Series 970 Connectors				
Material / Finish	**ME** = Aluminum / Electroless Nickel **MT** = Aluminum / Nickel PTFE **NF** = Aluminum / Olive Drab Cadmium **TZ** = Aluminum / Tin-Zinc **ZR** = Aluminum / Black Zinc-Nickel **Z1** = Stainless Steel / Passivated				
Shell Size	**18 20 24 28 32 36 40**				
Wire Support Bushing	**Omit** if not required **-2** = Two Slot Wire Support Bushing (*for arr. 18-2, 24-2, 32-2*) **-3** = Three Slot Wire Support Bushing (*for arr. 20-3, 24-3, 32-3*) **-4** = Four Slot Wire Support Bushing (*for arr. 20-4, 28-4, 36-4*) **-5** = Five Slot Wire Support Bushing (*for arr. 24-5, 32-5, 40-5*)				

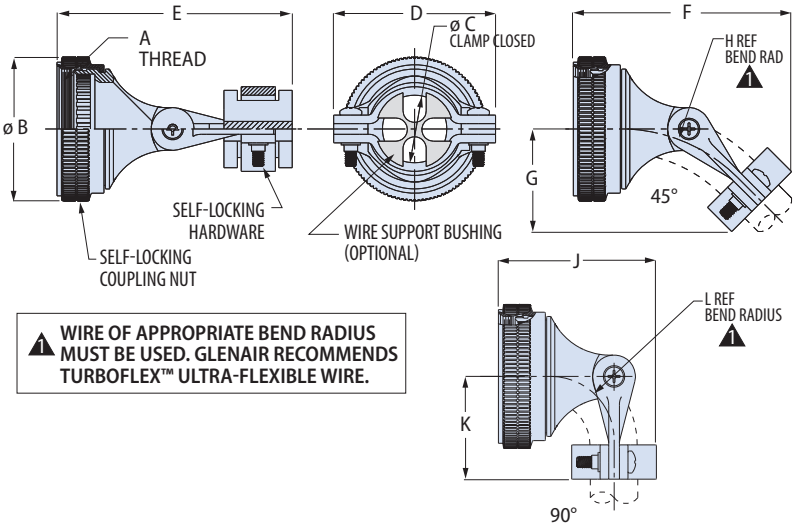

1 WIRE OF APPROPRIATE BEND RADIUS MUST BE USED. GLENAIR RECOMMENDS TURBOFLEX™ ULTRA-FLEXIBLE WIRE.

DIMENSIONS

Shell Size	A Thread Class 2B	B Max	C ±.031	D Max	E Max	F Max	G Max	H Max	J Max	K Max	L Ref	M Ref
18	1.125-18 UNEF	1.39 (35.31)	0.518 (13.16)	1.795 (45.59)	2.379 (60.43)	2.280 (57.91)	1.211 (30.76)	1.52 (38.61)	1.513 (38.43)	1.310 (33.27)	0.63 (16.00)	0.63 (16.00)
20	1.250-18 UNEF	1.53 (38.86)	0.665 (16.89)	1.929 (49.00)	2.504 (63.60)	2.456 (62.38)	1.263 (32.08)	1.81 (45.97)	1.711 (43.46)	1.310 (33.27)	0.75 (19.05)	0.63 (16.00)
24	1.4375-18 UNEF	1.72 (43.69)	0.795 (20.19)	2.114 (53.70)	2.879 (73.13)	2.805 (71.25)	1.486 (37.74)	2.12 (53.85)	1.901 (48.29)	1.560 (39.62)	0.88 (22.35)	0.75 (19.05)
28	1.8125-16 UN	2.13 (54.10)	1.080 (27.43)	2.424 (61.57)	3.004 (76.30)	3.031 (76.99)	1.587 (40.31)	2.41 (61.21)	2.169 (55.09)	1.560 (39.62)	1.00 (25.40)	0.75 (19.05)
32	2.0625-16 UNS	2.35 (59.69)	1.200 (30.48)	2.816 (71.53)	3.629 (92.18)	3.596 (91.34)	2.027 (51.49)	2.75 (69.85)	2.417 (61.39)	2.060 (52.32)	1.13 (28.70)	0.88 (22.35)
36	2.250-16 UN	2.59 (65.79)	1.400 (35.56)	3.019 (76.68)	3.754 (95.35)	3.792 (96.32)	2.098 (53.29)	3.03 (76.96)	2.642 (67.11)	2.060 (52.32)	1.25 (31.75)	0.88 (22.35)
40	2.500-16 UN	2.87 (72.90)	1.700 (43.18)	3.246 (82.45)	3.879 (98.53)	4.023 (102.18)	2.204 (55.98)	3.32 (84.33)	2.917 (74.09)	2.060 (52.32)	1.38 (35.05)	0.88 (22.35)

© 2024 Glenair, Inc • 1211 Air Way, Glendale, CA 91201 • 818-247-6000 • www.glenair.com • U.S. CAGE code 06324 • Series 970 PowerTrip Connectors
Dimensions in Inches (millimeters) are subject to change without notice.

Backshells and Accessories
310P*001 Shrink Boot Adapter

Self-Locking

310P*001 shrink boot adapter fits Series 970 PowerTrip Connectors. Use with unshielded cable. Adapter has groove for lipped shrink boot. Self-locking coupling nut has ratchet mechanism to prevent loosening under vibration. Supplied as adapter only or with shrink boot. Aluminum or stainless steel, silicone O-ring, thermoplastic ratchet spring. SST adapter has SST ratchet spring.

HOW TO ORDER

Sample Part Number → 310PS001 ME 32 T

Basic Number	Base Part No.	Profile
	310PS001	S Straight
	310PM001	M 45°
	310PN001	N 90°
Material / Finish	ME = Aluminum / Electroless Nickel MT = Aluminum / Nickel PTFE NF = Aluminum / Olive Drab Cadmium TZ = Aluminum / Tin-Zinc ZR = Aluminum / Black Zinc-Nickel Z1 = Stainless Steel / Passivated	
Shell Size	18 20 24 28 32 36 40	
Shrink Boot	Omit if not required T = Shrink Boot Included S = Zero Halogen Shrink Boot Included	

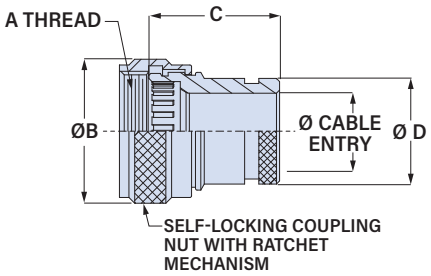

S Straight

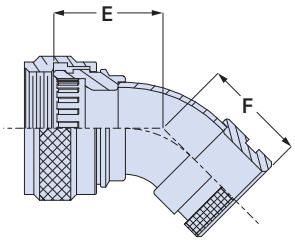

M 45°

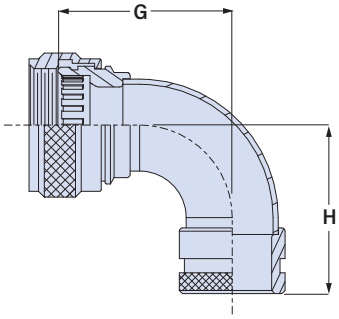

N 90°

DIMENSIONS

Shell Size	A Thread	ø B Max		C Max		D Max		E Max		F Max		G Max		H Max		R Max		Cable Entry Min	
		in	mm	in	mm	in	mm	in	mm	in	mm	in	mm	in	mm	in	mm	in	mm
18	1.125-18 UNEF-2B	1.39	35.3	1.250	31.8	1.005	25.5	1.250	31.8	1.00	25.4	1.906	48.4	1.63	41.4	.880	22.4	.724	18.4
20	1.250-18 UNEF-2B	1.53	38.9	1.250	31.8	1.139	28.9	1.312	33.3	1.06	26.9	2.031	51.6	1.75	445	1.00	25.4	.858	21.8
24	1.4375-18 UNEF-2B	1.72	43.7	1.250	31.8	1.324	33.6	1.406	35.7	1.19	30.2	2.281	57.9	2.00	50.8	1.25	31.8	1.043	26.5
28	1.8125-16 UN-2B	2.13	54.1	1.250	31.8	1.625	41.2	1.500	38.1	1.25	31.8	2.531	64.3	2.44	62.0	1.50	38.1	1.353	34.4
32	2.0625-16 UNS-2B	2.35	59.7	1.315	33.4	1.901	48.3	1.675	42.5	1.38	35.1	2.625	66.7	2.75	69.9	1.75	44.5	1.620	41.4
36	2.250-16 UN-2B	2.59	65.8	1.315	33.4	2.104	53.4	1.799	45.7	1.75	44.5	2.875	73.0	2.88	73.2	2.25	57.2	1.823	46.3
40	2.500-16 UN-2B	2.87	70.6	1.315	33.4	2.331	59.2	1.861	47.3	1.75	44.5	3.025	76.8	2.88	73.2	2.25	57.2	2.050	52.1

SHRINK BOOT

Optional heatshrink boot provides cable strain relief and environmental protection.

Standard Type 1 high-performance semi-rigid elastomer resists fuels and oils and withstands temperature extremes. Operating temperature range -75 to +150 °C.

Zero Halogen Type 2 high-performance semi-flexible polyolefin meets low smoke and toxicity requirements. Operating temperature range -40 to +130 °C.

Shell Size	Shrink Boot Part Number Standard (T)	Shrink Boot Part Number Zero Halogen (S)
18	770-001S105	770-001S205
20	770-001S105	770-001S205
24	770-001S106	770-001S206
28	770-001S107	770-001S207
32	770-001S108	770-001S208
36	770-001S109	770-001S209
40	770-001S109	770-001S209

Backshells and Accessories
770-003S Heatshrink Boot

- **Lipped straight boot**
- **Hi-Performance Elastomer or LSZH polyolefin**

770-003S heatshrink boot provides strain relief and environmental protection. Shape-memory polymer returns to as-molded shape when heat is applied. Boot has "lip" to fit into adapter boot groove. Semi-rigid high performance elastomer or non-halogenated flame-retartant polyolefin for use where limited fire hazard is required.

HOW TO ORDER

	Sample Part Number →	770-003S	1	06	W1
Basic Number	**770-003S** = Heatshrink Boot, Lipped, Straight				
Material	**1** = Type 1: High Performance Elastomer, Semi-Rigid **2** = Type 2: Low Smoke, Zero Halogen Polyolefin				
Boot Size	See Table				
Adhesive Lining	**Omit** for no adhesive lining **W1** = Hot Melt Adhesive **R** = Epoxy Pre-Coat (*for Type 1 Material only*)				

AS SUPPLIED (EXPANDED)

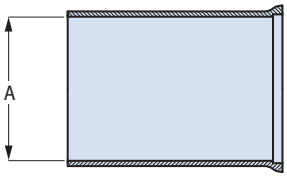

AFTER SHRINKING (RECOVERED)

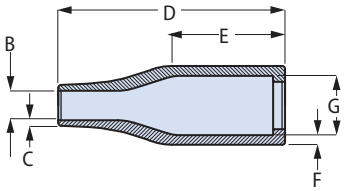

MATERIAL SELECTION GUIDE

Type 1 **High Performance Elastomer**

-75 to +150 °C. Semi-rigid high performance elastomer combines excellent resistance to fuels, oils and solvents with superior performance at extreme temperatures. Material meets the requirements of VG95343 Type 6, BSG 198-5-DE, EN62329-102 and SAE AS5258 Type H. These boots are recommended for demanding applications such as military vehicles and petrochemical exploration.

Type 2 **LSZH Polyolefin**

-30 to +135 °C. Low Smoke Zero Halogen (LSZH) polyolefin boots meet low smoke and toxicity requirements of shipboard, transit and aircraft systems. Oxygen index greater than 30%, smoke index less than 20, and toxicity index under 3 per 100 grams. Material meets requirements of NAVSEA 5617649, VG95343 Part 29, BSG 198-5-DF, EN62329-101 and SAE AS5258 Type G. Good resistance to oils, fuels and solvents.

DIMENSIONS

Boot Size	A Min.		B Max.		C ± 20%		D ± 10%		E Ref.		F ± 30%		G Max.	
	In.	mm.	In.	mm.	In.	mm.	In.	mm.	In.	mm.	In.	mm.	In.	mm.
01	.472	12.0	.118	3.0	.028	0.7	.984	25.0	.551	14.0	.043	1.1	.276	7.0
02	.669	17.0	.138	3.5	.028	0.7	1.181	30.0	.728	18.5	.051	1.3	.276	7.0
03	.945	24.0	.197	5.0	.035	0.9	1.496	38.0	.748	19.0	.063	1.6	.413	10.5
04	1.181	30.0	.236	6.0	.039	1.0	2.165	55.0	1.181	30.0	.071	1.8	.551	14.0
05	1.260	32.0	.276	7.0	.047	1.2	2.638	67.0	1.299	33.0	.071	1.8	.709	18.0
06	1.417	36.0	.335	8.5	.047	1.2	3.150	80.0	1.575	40.0	.079	2.0	.866	22.0
07	1.693	43.0	.394	10.0	.051	1.3	3.898	99.0	2.165	55.0	.087	2.2	1.102	28.0
08	2.362	60.0	.591	15.0	.063	1.6	5.118	130.0	1.969	50.0	.130	3.3	1.378	35.0
09	2.599	66.0	.661	16.8	.079	2.0	6.693	170.0	3.543	90.0	.150	3.8	1.752	44.5
10	3.400	86.4	1.060	26.9	.130	3.3	7.700	195.6	4.005	102.0	.160	4.1	2.250	57.2

PRECOAT ADHESIVE

W1 **Hot Melt Pre-Coat**

Low Smoke Zero halogen (LSZH) polyamide hot melt adhesive pre-coat. Bonds well to a variety of substrates. Good creep resistance at elevated temperatures. Excellent bond strength at low temperature. Good resistance to fuels and oils. -55 to +125 °C. Compatible with Type 1 and Type 2 materials.

R **Epoxy Pre-Coat**

Use with Type 1 material only

Glenair's highest performance pre-coated adhesive. The material requires careful installation using trained operators. -75 to 150 °C. Withstands prolonged high temperature immersion in fuels and oils. Excellent peel adhesion on a wide range of materials. .

Series 77 "Full Nelson" Shrink Boot Catalog has additional boot styles, technical information, installation instructions and other heatshrink products. Contact Glenair or go to www.glenair.com.

USER-INSTALLED BOOT ADHESIVE

Glenair recommends user-installed Type U two-part epoxy adhesive. User-installed adhesive is faster/ easier to install and has superior performance compared to pre-coated boots. Pre-coated boots require additional care to install because the boot must be heated sufficiently to activate the epoxy, at the risk of overheating the overall assembly. A single 50 ml duo syringe can coat many boots and can be re-capped for later re-use.

Part Number **779-001**

High performance flexible two part thermoset epoxy provides high strength flexible bond from -55 to 150 °C. 50 ml duo syringe fits standard dispensing guns. Use with square green mixing nozzle sold separately. 12 hour cure time at 20 °C, 1 hour at 85 °C, 30 minutes at 150 °C. Apply to inside of boot with wooden spatula. 18 month shelf life. Meets VG95343 part 15.

Part Number **779-002**

Twin push-rod 1:1 ratio epoxy dispensing gun for use with duo syringe epoxy and mixing nozzle sold separately. Durable heavy-duty plastic. Gun type hand grip with ratcheting trigger.

Part Number **779-003**

1:1 ratio mixing nozzle attaches to duo syringe with 1/2 turn and locks into place. Nozzle provides consistent mixing of resin and hardener. Kit consists of (12) nozzles.

© 2024 Glenair, Inc • 1211 Air Way, Glendale, CA 91201 • 818-247-6000 • www.glenair.com • U.S. CAGE code 06324 • Series 970 PowerTrip Connectors
Dimensions in Inches (millimeters) are subject to change without notice.

Backshells and Accessories
370P*024 Environmental Backshell

Self-Locking

370P*024 environmental backshell fits Glenair Series 970 PowerTrip connectors. For use with unshielded jacketed cable. Strain relief styles include saddle clamp or low profile nut. Anti-decoupling mechanism provides audible detented coupling and prevents backoff under high vibration. Available in aluminum or stainless steel.

- Cable sealing backshell for Series 970 PowerTrip® connectors
- Use with unshielded jacketed cable
- Self-locking coupling nut
- Three strain relief options: gland nut, saddle clamp or wire mesh cordgrip

PROFILE SELECTION GUIDE

S Straight

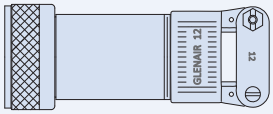

M 45°

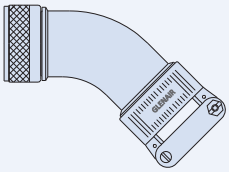

N 90°

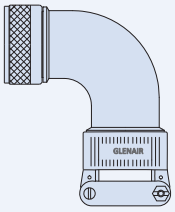

HOW TO ORDER

Sample Part Number → **370PS024 NF 20 06H -6**

Base P/N	Base Part No. / Profile 370PS024 S Straight 370PM024 M 45° 370PN024 N 90°
Material/Finish	**ME** = Aluminum / Electroless Nickel **MT** = Aluminum / Nickel PTFE **NF** = Aluminum / Olive Drab Cadmium **TZ** = Aluminum / Tin-Zinc **ZR** = Aluminum / Black Zinc-Nickel **Z1** = Stainless Steel / Passivated
Shell Size	**18 20 24 28 32 36 40**
Order Code	See Table 1, 2 or 3 below for Order Code
Length	**6** = 3 inches **8** = 4 inches **10** = 5 inches **12** = 6 inches **14** = 7 inches *Applies to Profile S straight only.* *Sizes 18–20 3.0 inches minimum, sizes 24–40 4.0 inches minimum. If selected Entry Size is greater than Maximum Entry Size (see next page), then 5 inch minimum applies.*

CONSTRUCTION

Coupling nut, body, saddles, gland nut: aluminum or SST

Hardware: stainless steel/ passivated

Anti-decoupling spring: thermoplastic (aluminum body) or SST (SST body)

Grommet: silicone

Cable grip: stainless steel, passivated

TABLE 1 SADDLE CLAMP

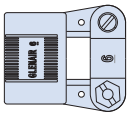

Order Code	Cable Range Min. In.	Min. mm.	Max. In.	Max. mm.	Shell Size
04H	.125	3.2	.312	7.9	18-40
06H	.250	6.4	.437	11.1	18-40
08H	.387	9.8	.562	14.3	18-40
10H	.350	8.9	.625	15.9	18-40
12H	.500	12.7	.750	19.1	20-40
16H	.625	15.9	.937	23.8	24-40
20H	.875	22.2	1.250	31.8	28-40
24H	1.000	25.4	1.375	34.9	32-40
28H	1.250	31.8	1.625	41.3	36-40
32H	1.437	36.5	1.875	47.6	40

TABLE 2 GLAND NUT

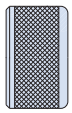

Order Code	Max. Cable Dia. In.	Max. Cable Dia. mm.	Shell Size
06D	.438	11.1	18-40
08D	.562	14.3	18-40
10D	.625	15.9	18-40
12D	.750	19.1	20-40
16D	.937	23.8	24-40
20D	1.250	31.8	28-40
24D	1.375	34.9	32-40
28D	1.625	41.3	36-40
32D	1.875	47.6	40
40D	2.375	60.3	–

TABLE 3 WIRE MESH CORDGRIP

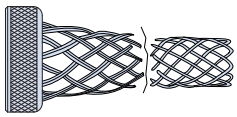

Order Code	Cable Range Min.- In.	Min. mm.	Max. In.	Max. mm.	Shell Size
04K	.210	5.3	.310	7.9	18-40
06K	.310	7.8	.438	11.1	18-40
08K	.438	11.1	.500	12.7	18-40
10K	.500	12.7	.625	15.8	18-40
12K	.625	15.9	.750	19.1	20-40
14K	.750	19.1	.875	22.2	24-40
16K	.875	22.2	1.000	25.4	24-40
20K	1.000	25.4	1.250	31.8	28-40
24K	1.125	28.6	1.375	34.9	32-40
28K	1.375	34.9	1.625	41.2	36-40
32K	1.625	41.3	1.875	47.6	40
40K	2.125	53.9	2.375	60.3	–

© 2024 Glenair, Inc • 1211 Air Way, Glendale, CA 91201 • 818-247-6000 • www.glenair.com • U.S. CAGE code 06324 • Series 970 PowerTrip Connectors
Dimensions in Inches (millimeters) are subject to change without notice.

Backshells and Accessories
370P*024 Environmental Backshell

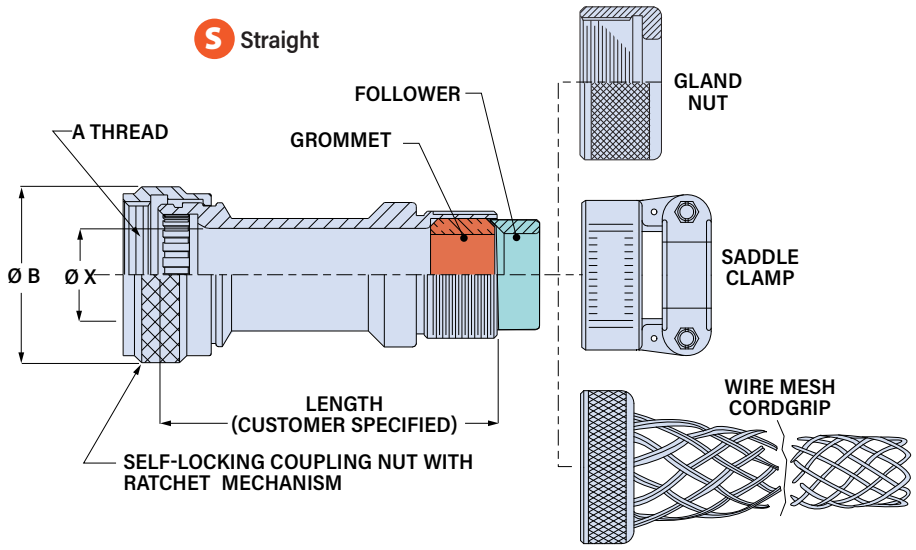

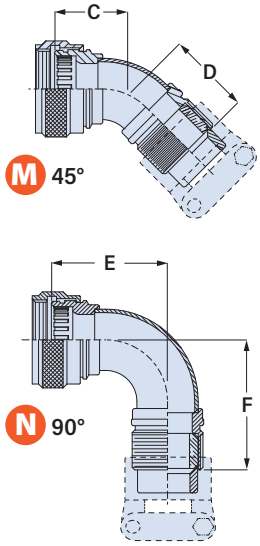

DIMENSIONS

Shell Size	A Thread 2B	ø B Max		C Max		D Max		E Max		F Max		ø X MIn		Max Entry Size
		In	mm	In	mm	In	mm	In	mm	In	mm	In	mm	
18	1.125-18 UNEF	1.39	35.3	1.250	31.8	2.468	62.7	1.906	48.4	1.812	46.0	.724	18.4	10
20	1.250-18 UNEF	1.53	38.9	1.312	33.3	2.657	67.5	2.031	51.6	1.938	49.2	.858	21.8	12
24	1.4375-18 UNEF	1.72	43.7	1.46	35.7	3.063	77.8	2.281	57.9	2.188	55.6	1.043	26.5	16
28	1.8125-16 UN	2.13	54.1	1.500	38.1	3.656	92.9	2.531	64.3	2.625	66.7	1.353	34.4	20
32	2.0625-16 UNS	2.35	59.7	1.675	42.5	3.845	97.7	2.625	66.7	2.895	73.5	1.620	41.2	24
36	2.250-16 UN	2.59	65.8	1.799	45.7	4.230	107.4	2.875	73.0	3.145	79.9	1.823	46.3	28
40	2.500-16 UN	2.87	70.6	1.861	47.3	4.459	113.3	3.025	76.8	3.295	83.7	2.050	52.1	32

MAXIMUM ENTRY SIZE

If the selected entry size exceeds the maximum size in this table, the backshell will have a front adapter. This is called a *Style 2* backshell.

Shell Size	Maximum Entry Size
18	10
20	12
24	16
28	20
32	24
36	28
40	32

STYLE 2 STRAIGHT BACKSHELL

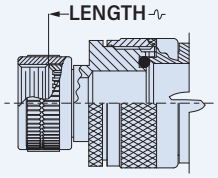

Style 2 profile S straight backshell minimum length code is 10 (5 inches).

STYLE 2 45° AND 90° BACKSHELLS

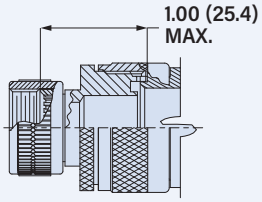

For Profile M and N 45° and 90° backshells, the front adapter adds 1 inch.

SADDLE CLAMP DIMENSIONS

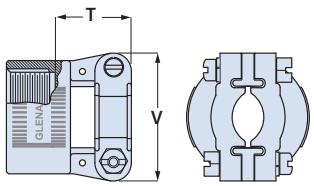

Order Code	T Max		V Max	
	In.	mm.	In.	mm.
04H	.780	19.8	.957	24.3
06H	.780	19.8	1.145	29.1
08H	.780	19.8	1.332	33.8
10H	.780	19.8	1.332	33.8
12H	.811	20.6	1.551	39.4
16H	.905	23.0	1.770	45.0
20H	1.092	27.7	2.113	53.7
24H	1.124	28.5	2.363	60.0
28H	1.399	35.5	2.770	70.4
32H	1.399	35.5	3.020	76.7
36H	1.750	44.5	3.250	82.6
40H	1.750	44.5	3.500	88.9

GLAND NUT DIM.

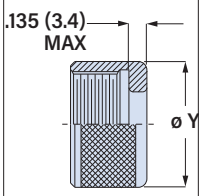

Order Code	ø Y Max	
	In.	mm.
06D	.942	23.9
08D	1.067	27.1
10D	1.192	30.3
12D	1.380	35.1
16D	1.535	39.0
20D	1.848	46.9
24D	2.255	57.3
28D	2.505	63.6
32D	2.755	70.0
40D	3.255	82.7

WIRE MESH CORDGRIP DIM.

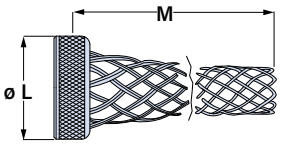

Order Code	L Max		M	
	In.	mm.	In.	mm.
04K	.755	19.2	2.75	70
06K	.942	23.9	4.00	101
08K	1.067	27.1	4.12	105
10K	1.192	30.3	4.37	111
12K	1.380	35.1	5.00	127
14K	1.563	39.7	6.00	152
16K	1.563	39.7	6.25	158
20K	1.875	47.6	7.25	184
24K	2.225	57.3	8.00	203
28K	2.505	63.6	8.50	216
32K	2.755	70.0	9.00	229
40K	3.225	82.7	9.50	241

© 2024 Glenair, Inc • 1211 Air Way, Glendale, CA 91201 • 818-247-6000 • www.glenair.com • U.S. CAGE code 06324 • Series 970 PowerTrip Connectors
Dimensions in Inches (millimeters) are subject to change without notice.

Backshells and Accessories
380P*105 EMI Backshell (Non-Environmental)

380P*105 EMI backshell fits Glenair Series 970 PowerTrip connectors. For use with shielded cable. Cone-and-ring shield termination with two ground rings. Non-environmental. Anti-decoupling mechanism provides audible detented coupling and prevents backoff under high vibration. Type H heavy duty saddle clamp has stainless steel telescoping fillister head screws and lockwashers. Available in aluminum or stainless steel.

- EMI cone-and-ring backshell for Series 970 PowerTrip® connectors
- For shielded cable
- Self-locking coupling nut
- Heavy duty saddle clamp strain relief

PROFILE SELECTION GUIDE

S Straight

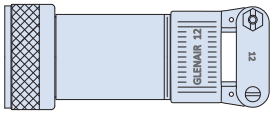

M 45°

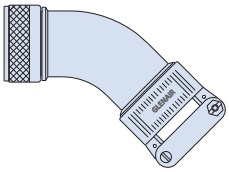

N 90°

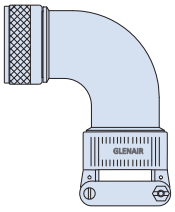

CONSTRUCTION

Coupling nut, body, ground rings, saddle clamp: aluminum or SST

Hardware: stainless steel/passivated

Anti-decoupling spring: thermoplastic (aluminum body) or SST (SST body)

INSTALLATION TORQUE

Shell Size	Recommended Installation Torque Inch-Pounds ± 5
18	116
20, 24	136
28, 32, 36	148
40	164

HOW TO ORDER

Sample Part Number → **380PS105 NF 24 06 H -6**

Base P/N

Base Part No.	Profile
380PS105	S Straight
380PM105	M 45°
380PN105	N 90°

Material/Finish

ME = Aluminum / Electroless Nickel
MT = Aluminum / Nickel PTFE
NF = Aluminum / Olive Drab Cadmium
TZ = Aluminum / Tin-Zinc
ZR = Aluminum / Black Zinc-Nickel
Z1 = Stainless Steel / Passivated

Shell Size

18 20 24 28 32 36 40

Entry Size

Entry Size	Max. Cable Dia.	Shell Size*
04	.312 (7.9)	18-40
06	.437 (11.1)	18-40
08	.562 (14.3)	18-40
10	.625 (15.9)	18-40
12	.750 (19.1)	20-40
16	.937 (23.8)	24-40
20	1.250 (31.8)	28-40
24	1.375 (34.9)	32-40
28	1.625 (41.3)	36-40
32	1.875 (47.6)	40

* If selected entry size exceeds shell size range, a Style 2 transition adapter will be included. See *Maximum Entry Size* for details.

Strain Relief

H = Saddle Clamp

Length

-6 = 3 inches
-8 = 4 inches
-10 = 5 inches
-12 = 6 inches
-14 = 7 inches

Applies to Profile S straight only.
3.0 inches minimum. If selected Entry Size is greater than Maximum Entry Size (see next page), then 4 inch minimum applies.

Backshells and Accessories
380P*105 EMI Backshell (Non-Environmental)

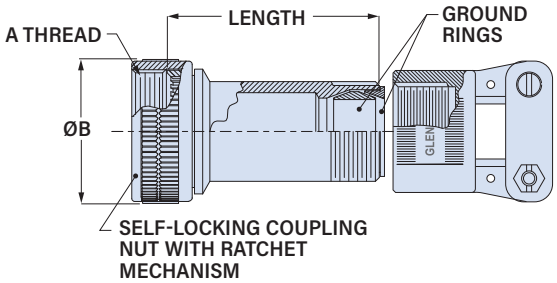

S Straight

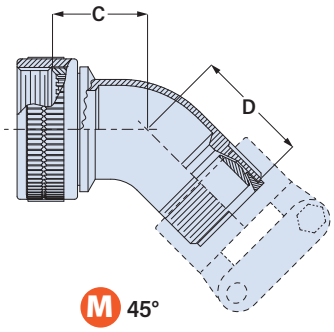

M 45°

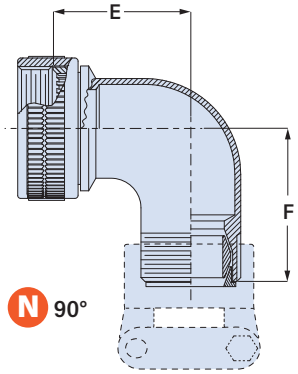

N 90°

DIMENSIONS

Shell Size	A Thread -2B	ø B Max.		C Max.		D Max.		E Max.		F Max.		Max. Entry Size
		In	mm	In	mm	In	mm	In	mm	In	mm	
18	1.125-18 UNEF	1.39	35.3	1.250	31.8	1.156	29.4	1.906	48.4	1.812	46.0	10
20	1.250-18 UNEF	1.53	38.9	1.312	33.3	1.219	31.0	2.031	51.6	1.938	49.2	12
24	1.4375-18 UNEF	1.72	43.7	1.46	35.7	1.312	33.3	2.281	57.9	2.188	55.6	16
28	1.8125-16 UN	2.13	54.1	1.500	38.1	1.625	41.3	2.531	64.3	2.625	66.7	20
32	2.0625-16 UNS	2.35	59.7	1.675	42.5	1.945	49.4	2.625	66.7	2.895	73.5	24
36	2.250-16 UN	2.59	65.8	1.799	45.7	2.069	52.6	2.875	73.0	3.145	79.9	28
40	2.500-16 UN	2.87	70.6	1.861	47.3	2.131	54.1	3.025	76.8	3.295	83.7	32

MAXIMUM ENTRY SIZE

If the selected entry size exceeds the maximum size in this table, the backshell will have a front adapter. This is called a ***Style 2*** backshell.

Shell Size	Maximum Entry Size
18	10
20	12
24	16
28	20
32	24
36	28
40	32

SADDLE CLAMP DIMENSIONS

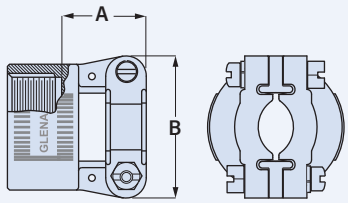

Entry Size	A Max		B Max		Cable Range Min		Cable Range Max	
	In.	mm.	In.	mm.	In	mm	In	mm
04	.780	19.8	.957	24.3	.125	3.2	.312	7.9
06	.780	19.8	1.145	29.1	.250	6.4	.437	11.1
08	.780	19.8	1.332	33.8	.312	7.9	.562	14.3
10	.780	19.8	1.332	33.8	.350	8.9	.625	15.9
12	.811	20.6	1.551	39.4	.500	12.7	.750	19.1
16	.905	23.0	1.770	45.0	.625	15.9	.937	23.8
20	1.092	27.7	2.113	53.7	.875	22.2	1.250	31.8
24	1.124	28.5	2.363	60.0	1.000	25.4	1.375	34.9
28	1.399	35.5	2.770	70.4	1.250	31.8	1.625	41.3
32	1.399	35.5	3.020	76.7	1.437	36.5	1.875	47.6

STYLE 2 STRAIGHT BACKSHELL

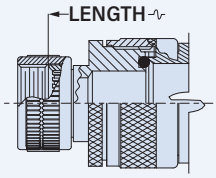

Style 2 S straight backshell minimum length code is -8 (4 inches).

STYLE 2 45° AND 90° BACKSHELLS

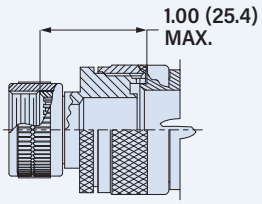

For M and N 45° and 90° backshells, the front adapter adds 1 inch.

© 2024 Glenair, Inc • 1211 Air Way, Glendale, CA 91201 • 818-247-6000 • www.glenair.com • U.S. CAGE code 06324 • Series 970 PowerTrip Connectors
Dimensions in Inches (millimeters) are subject to change without notice.

Backshells and Accessories
390P*055 EMI+Environmental Backshell

390P*055 EMI + environmental backshell fits Glenair Series 970 PowerTrip connectors. For use with shielded jacketed cable. Cone-and-ring shield termination with two ground rings. Splined M28840-type connector coupling. Anti-decoupling mechanism provides audible detented coupling and prevents backoff under high vibration. Type H heavy duty saddle clamp has stainless steel telescoping fillister head screws and lockwashers. Meets AS85049 Category 1A water immersion (6 ft/48 hrs). Available in aluminum or stainless steel.

- EMI environmental backshell for Series 970 PowerTrip® connectors
- For shielded jacketed cable
- Self-locking coupling nut
- Heavy duty saddle clamp strain relief
- Silicone cable gland

PROFILE SELECTION GUIDE

S Straight

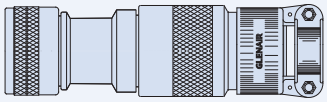

M 45°

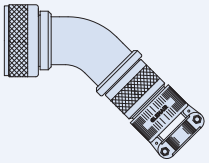

N 90°

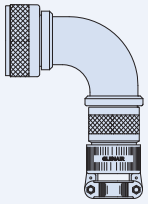

HOW TO ORDER

Sample Part Number →	390PS055	NF	20	06H	-6

Base P/N

Base Part No.	Profile
390PS055	S Straight
390PM055	M 45°
390PN055	N 90°

Material/Finish

ME = Aluminum / Electroless Nickel
MT = Aluminum / Nickel PTFE
NF = Aluminum / Olive Drab Cadmium
TZ = Aluminum / Tin-Zinc
ZR = Aluminum / Black Zinc-Nickel
Z1 = Stainless Steel / Passivated

Shell Size

18 20 24 28 32 36 40

Order Code

See Table 1, 2 or 3 for strain relief size and type

Length

6 = 3 inches
8 = 4 inches
10 = 5 inches
12 = 6 inches
14 = 7 inches

Applies to Profile S straight only.
Sizes 18–20 3.0 inches minimum, sizes 24–40 4.0 inches minimum. If selected Entry Size is greater than Maximum Entry Size (see next page), then 5 inch minimum applies.

CONSTRUCTION

Coupling nut, adapters, saddles, gland nut, ground rings: aluminum or SST

Hardware: stainless steel/ passivated

Anti-decoupling spring: thermoplastic (aluminum body) or SST (SST body)

Grommet: silicone

Cable grip: stainless steel, passivated

TABLE 1 SADDLE CLAMP

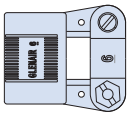

Order Code	Cable Range Min. In.	Min. mm.	Max. In.	Max. mm.	Shell Size
04H	.125	3.2	.312	7.9	18-40
06H	.250	6.4	.437	11.1	18-40
08H	.387	9.8	.562	14.3	18-40
10H	.350	8.9	.625	15.9	18-40
12H	.500	12.7	.750	19.1	20-40
16H	.625	15.9	.937	23.8	24-40
20H	.875	22.2	1.250	31.8	28-40
24H	1.000	25.4	1.375	34.9	32-40
28H	1.250	31.8	1.625	41.3	36-40
32H	1.437	36.5	1.875	47.6	40
36H	1.625	41.3	2.125	53.9	–
40H	1.875	47.6	2.375	60.3	–

TABLE 2 GLAND NUT

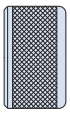

Order Code	Max. Cable Dia. In.	Max. Cable Dia. mm.	Shell Size
06D	.438	11.1	18-40
08D	.562	14.3	18-40
10D	.625	15.9	18-40
12D	.750	19.1	20-40
16D	.937	23.8	24-40
20D	1.250	31.8	28-40
24D	1.375	34.9	32-40
28D	1.625	41.3	36-40
32D	1.875	47.6	40
40D	2.375	60.3	–

TABLE 3 WIRE MESH CORDGRIP

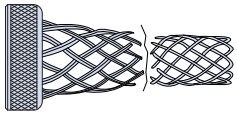

Order Code	Cable Range Min.- In.	Min.- mm.	Max. In.	Max. mm.	Shell Size
04K	.210	5.3	.310	7.9	18-40
06K	.310	7.8	.438	11.1	18-40
08K	.438	11.1	.500	12.7	18-40
10K	.500	12.7	.625	15.8	18-40
12K	.625	15.9	.750	19.1	20-40
14K	.750	19.1	.875	22.2	24-40
16K	.875	22.2	1.000	25.4	24-40
20K	1.000	25.4	1.250	31.8	28-40
24K	1.125	28.6	1.375	34.9	32-40
28K	1.375	34.9	1.625	41.2	36-40
32K	1.625	41.3	1.875	47.6	40
40K	2.125	53.9	2.375	60.3	–

Backshells and Accessories
390P*055 EMI+Environmental Backshell

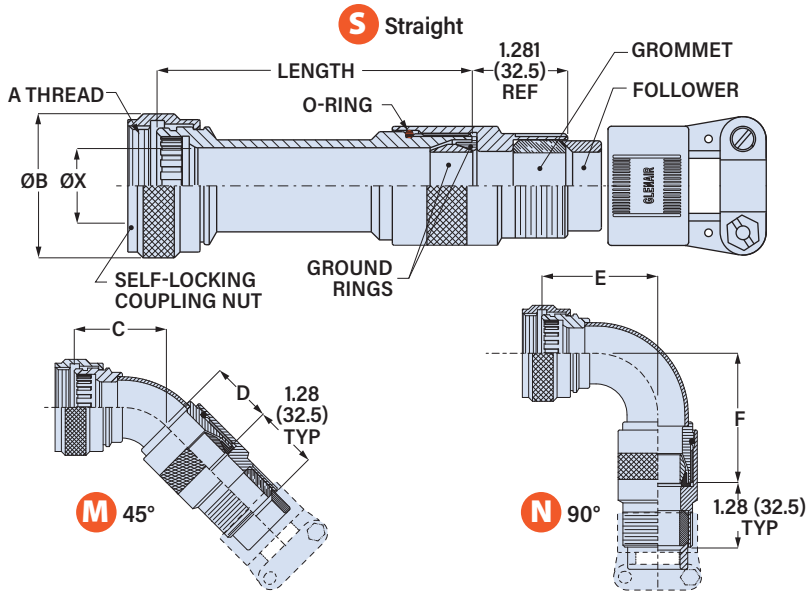

MAXIMUM ENTRY SIZE

If the selected entry size exceeds the maximum size in this table, the backshell will have a front adapter. This is called a *Style 2* backshell.

Shell Size	Maximum Entry Size
18	10
20	12
24	16
28	20
32	24
36	28
40	32

STYLE 2 STRAIGHT BACKSHELL

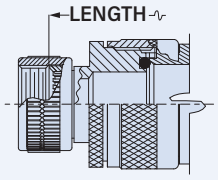

Style 2 profile S straight backshell minimum length code is 10 (5 inches).

STYLE 2 45° AND 90° BACKSHELLS

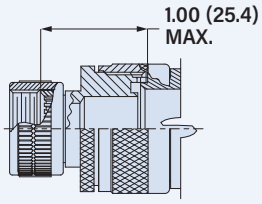

For Profile M and N 45° and 90° backshells, the front adapter adds 1 inch.

DIMENSIONS

Shell Size	A Thread -2B	ø B Max. In.	ø B Max. mm.	C Max. In.	C Max. mm.	D Max. In.	D Max. mm.	E Max. In.	E Max. mm.	F Max. In.	F Max. mm.	ø X Min. In.	ø X Min. mm.	Max. Entry Size
18	1.125-18 UNEF	1.39	35.3	1.250	31.8	2.468	62.7	1.906	48.4	1.812	46.0	.724	18.4	10
20	1.250-18 UNEF	1.53	38.9	1.312	33.3	2.657	67.5	2.031	51.6	1.938	49.2	.858	21.8	12
24	1.4375-18 UNEF	1.72	43.7	1.46	35.7	3.063	77.8	2.281	57.9	2.188	55.6	1.043	26.5	16
28	1.8125-16 UN	2.13	54.1	1.500	38.1	3.656	92.9	2.531	64.3	2.625	66.7	1.353	34.4	20
32	2.0625-16 UNS	2.35	59.7	1.675	42.5	3.845	97.7	2.625	66.7	2.895	73.5	1.620	41.2	24
36	2.250-16 UN	2.59	65.8	1.799	45.7	4.230	107.4	2.875	73.0	3.145	79.9	1.823	46.3	28
40	2.500-16 UN	2.87	70.6	1.861	47.3	4.459	113.3	3.025	76.8	3.295	83.7	2.050	52.1	32

SADDLE CLAMP DIMENSIONS

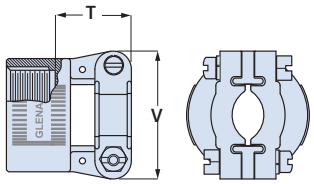

Order Code	T Max In.	T Max mm.	V Max In.	V Max mm.
04H	.780	19.8	.957	24.3
06H	.780	19.8	1.145	29.1
08H	.780	19.8	1.332	33.8
10H	.780	19.8	1.332	33.8
12H	.811	20.6	1.551	39.4
16H	.905	23.0	1.770	45.0
20H	1.092	27.7	2.113	53.7
24H	1.124	28.5	2.363	60.0
28H	1.399	35.5	2.770	70.4
32H	1.399	35.5	3.020	76.7
36H	1.750	44.5	3.250	82.6
40H	1.750	44.5	3.500	88.9

GLAND NUT DIM.

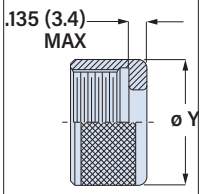

Order Code	ø Y Max In.	ø Y Max mm.
06D	.942	23.9
08D	1.067	27.1
10D	1.192	30.3
12D	1.380	35.1
16D	1.535	39.0
20D	1.848	46.9
24D	2.255	57.3
28D	2.505	63.6
32D	2.755	70.0
40D	3.255	82.7

WIRE MESH CORDGRIP DIM.

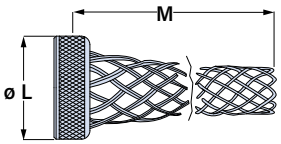

Order Code	L Max In.	L Max mm.	M In.	M mm.
04K	.755	19.2	2.75	70
06K	.942	23.9	4.00	101
08K	1.067	27.1	4.12	105
10K	1.192	30.3	4.37	111
12K	1.380	35.1	5.00	127
14K	1.563	39.7	6.00	152
16K	1.563	39.7	6.25	158
20K	1.875	47.6	7.25	184
24K	2.225	57.3	8.00	203
28K	2.505	63.6	8.50	216
32K	2.755	70.0	9.00	229
40K	3.225	82.7	9.50	241

INSTALLATION TORQUE

Shell Size	Recommended Installation Torque Inch-Pounds ± 5
18	116
20, 24	136
28, 32, 36	148
40	164

© 2024 Glenair, Inc • 1211 Air Way, Glendale, CA 91201 • 818-247-6000 • www.glenair.com • U.S. CAGE code 06324 • Series 970 PowerTrip Connectors
Dimensions in Inches (millimeters) are subject to change without notice.

Backshells and Accessories
440P*069 Banding Backshell

Self-Locking

440P*069 banding backshell fits Glenair Series 970 PowerTrip connectors. Anti-decoupling mechanism provides audible detented coupling and prevents backoff under high vibration. Terminate braid shield with optional band strap. Shrink boot provides environmental protection and strain relief. Aluminum version has thermoplastic detent spring, stainless steel version has stainless steel detent spring.

- EMI Banding adapter for Series 970 PowerTrip® connectors
- Self-locking coupling nut
- Groove for lipped shrink boot
- For shielded wire bundles

TABLE 1 ENTRY SIZE

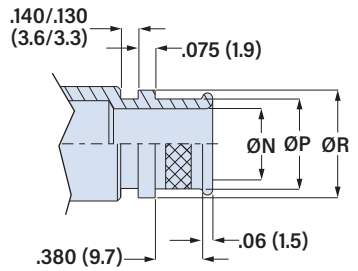

Entry Size	Shell Sizes*	øN in	øN mm	øP in	øP mm	ø in	ø mm
01	18-40	.125	3.2	.250	6.4	.312	7.9
31	18-40	.188	4.8	.312	7.9	.375	9.5
02	18-40	.250	6.4	.375	9.5	.438	11.1
32	18-40	.312	7.9	.438	11.1	.500	12.7
03	18-40	.375	9.5	.500	12.7	.562	14.3
33	18-40	.438	11.1	.562	14.3	.625	15.9
04	18-40	.500	12.7	.625	15.9	.687	17.4
34	18-40	.562	14.3	.688	17.5	.750	19.1
05	18-40	.625	15.9	.750	19.1	.812	20.6
35	18-40	.688	17.5	.812	20.6	.875	22.2
06	20-40	.750	19.1	.875	22.2	.938	23.8
36	20-40	.812	20.6	.938	23.8	1.000	25.4
07	24-40	.875	22.2	1.000	25.4	1.062	27.0
37	24-40	.938	23.8	1.062	27.0	1.125	28.6
08	24-40	1.000	25.4	1.125	28.6	1.188	30.2
38	28-40	1.062	27.0	1.188	30.2	1.250	31.8
09	28-40	1.125	28.6	1.250	31.8	1.312	33.3
10	28-40	1.250	31.8	1.375	34.9	1.438	36.5
11	32-40	1.375	34.9	1.500	38.1	1.562	39.7
12	32-40	1.500	38.1	1.625	41.3	1.688	42.9
13	32-40	1.625	41.3	1.750	44.5	1.812	46.0
14	36-40	1.750	44.5	1.875	47.6	1.938	49.2
15	40	1.875	47.6	2.000	50.8	2.062	52.4
16	40	2.000	50.8	2.125	54.0	2.188	55.6
17*	-	2.125	54.0	2.250	57.2	2.313	58.8
18*	-	2.250	57.2	2.375	60.3	2.438	61.9
19*	-	2.375	60.3	2.500	63.5	2.563	65.1
20*	-	2.500	63.5	2.625	66.7	2.688	68.3

** If selected entry size exceeds shell size range, a Style 2 transition adapter will be included. See Maximum Entry Size for details.*

HOW TO ORDER

Sample Part Number → 440PS069 NF 20 05 -8 K P T

Base P/N

Base Part No.	Profile
440PS069	S Straight
440PM069	M 45°
440PN069	N 90°

Material/Finish
- **ME** = Aluminum / Electroless Nickel
- **MT** = Aluminum / Nickel PTFE
- **NF** = Aluminum / Olive Drab Cadmium
- **TZ** = Aluminum / Tin-Zinc
- **ZR** = Aluminum / Black Zinc-Nickel
- **Z1** = Stainless Steel / Passivated

Shell Size
18 20 24 28 32 36 40

Entry Size
See Table 1

Length
- **4** = 2 inches
- **6** = 3 inches
- **8** = 4 inches
- **10** = 5 inches
- **12** = 6 inches

Applies to Profile S only. *If selected Entry Size is greater than Maximum Entry Size (see next page), then 3 inch minimum applies.*

Band
- **Omit** = Not required
- **K** = Pre-Coiled Band included with backshell

Polysulfide
- **Omit** = Not required. ***Applies to Plating Codes NF, ZR, TZ only.***
- **P** = Nickel Plated Shield Termination Area with Polysulfide Barrier

Shrink Boot
- **Omit** = Not required
- **T** = Standard Shrink Boot
- **S** = Zero Halogen Shrink Boot

SHIELD BAND

Use banding strap to terminate cable braid. Stainless steel band strap provides fast, cost-effective and highly reliable termination of braided metallic shielding. The Band-Master ATS® Advanced Cable Shield Termination System is the overwhelming favorite throughout the military aerospace and defense industries, providing excellent static loading and corrosion resistance in electrical wire interconnect systems.

Band Strap

Banding Tool
601-100

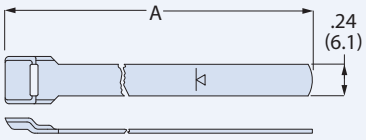

A Length in	A Length mm	Fits up to Dia. in	Fits up to Dia. mm	Part Number Pre-coiled
14	355	1.80	45.7	601-041
18	457	2.50	63.5	601-050

Backshells and Accessories
440P*069 Banding Backshell

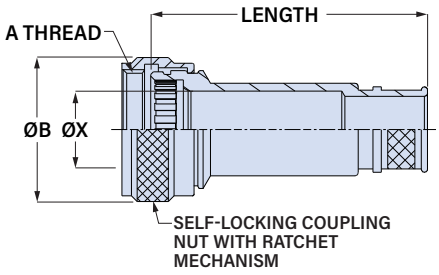

Profile S Straight

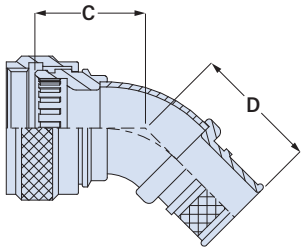

Profile M 45°

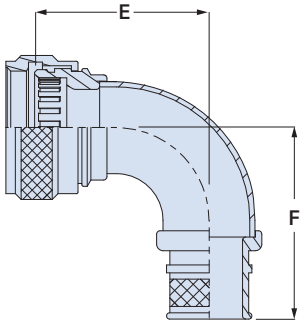

Profile N 90°

MAXIMUM ENTRY SIZE

If the selected entry size exceeds the maximum size in this table, the backshell will have a front adapter. This is called a Style 2 backshell.

Shell Size	Maximum Entry Size
18	35
20	36
24	08
28	10
32	13
36	14
40	16

STYLE 2 STRAIGHT BACKSHELL

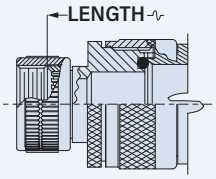

Style 2 profile S straight backshell minimum length code is 6 (3 inches).

STYLE 2 45° AND 90° BACKSHELLS

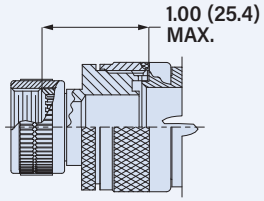

For Profile M and N 45° and 90° backshells, the front adapter adds 1 inch.

DIMENSIONS

Shell Size	A Thread -2B	ø B Max.		C Max.		D Max.		E Max.		F Max.		X Min.		Max. Entry Size
		in	mm	in	mm	in	mm	in	mm	in	mm	in	mm	
18	1.125-18 UNEF	1.39	35.3	1.250	31.8	2.468	62.7	1.906	48.4	1.812	46.0	.724	18.4	35
20	1.250-18 UNEF	1.53	38.9	1.312	33.3	2.657	67.5	2.031	51.6	1.938	49.2	.858	21.8	36
24	1.4375-18 UNEF	1.72	43.7	1.406	35.7	3.063	77.8	2.281	57.9	2.188	55.6	1.043	26.5	08
28	1.8125-16 UN	2.13	54.1	1.500	38.1	3.656	92.9	2.531	64.3	2.625	66.7	1.353	34.4	10
32	2.0625-16 UNS	2.35	59.7	1.675	42.5	3.845	97.7	2.625	66.7	2.895	73.5	1.620	41.2	13
36	2.250-16 UN	2.59	65.8	1.799	45.7	4.230	107.4	2.875	73.0	3.145	79.9	1.823	46.3	14
40	2.500-16 UN	2.87	70.6	1.861	47.3	4.459	113.3	3.025	76.8	3.295	83.7	2.050	52.1	16

SHRINK BOOT

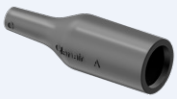

Optional heatshrink boot provides cable strain relief and environmental protection.

Standard Type 1 high-performance semi-rigid elastomer resists fuels and oils. Operating temperature range -75 to +150 °C.

Zero Halogen Type 2 high-performance semi-flexible polyolefin meets low smoke and toxicity requirements. Operating temperature range -40 to +130 °C.

Entry Sizes	Shrink Boot Part Number Standard	Shrink Boot Part Number Zero Halogen
01-31	770-003S111	770-003S211
02-32	770-003S112	770-003S212
03	770-001S103	770-001S203
33-35	770-001S104	770-001S204
06-37	770-001S105	770-001S205
08-38	770-001S106	770-001S206
09-12	770-001S107	770-001S207
13-14	770-001S108	770-001S208
15-16	770-001S109	770-001S209
17-20	770-001S110	770-001S210

POLYSULFIDE BARRIER

Optional selective electroless nickel plating on shield termination area and polysulfide dielectric barrier prevents galvanic mismatch between nickel-coated braid shield and backshell.

⚠ *Plating codes NF, ZR and TZ only*

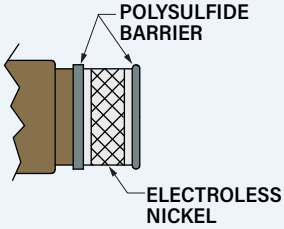

© 2024 Glenair, Inc • 1211 Air Way, Glendale, CA 91201 • 818-247-6000 • www.glenair.com • U.S. CAGE code 06324 • Series 970 PowerTrip Connectors
Dimensions in Inches (millimeters) are subject to change without notice.

Backshells and Accessories

390PS036 EMI Cable Sealing Backshell w/ Saddle Clamp

Self-Locking

- EMI environmental backshell for Series 970 PowerTrip® connectors
- Saddle clamp strain relief

Heavy duty 390PS036 backshell fits Glenair Series 970 PowerTrip connectors. For use with shielded jacketed cable. Cone-and-ring shield termination with two ground rings. Splined M28840-type connector coupling. Withstands MIL-S-901 Grade A high impact shock. Type H saddle clamp has stainless steel telescoping fillister head screws and lockwashers. Meets AS85049 Category 1A water immersion (6 ft/48 hrs). Available in aluminum or stainless steel.

CONSTRUCTION

Coupling nut, body, ground rings, saddle clamp, follower: aluminum or SST

Hardware: stainless steel/ passivated

Anti-decoupling spring: thermoplastic (aluminum body) or SST (SST body)

O-ring, grommet: silicone

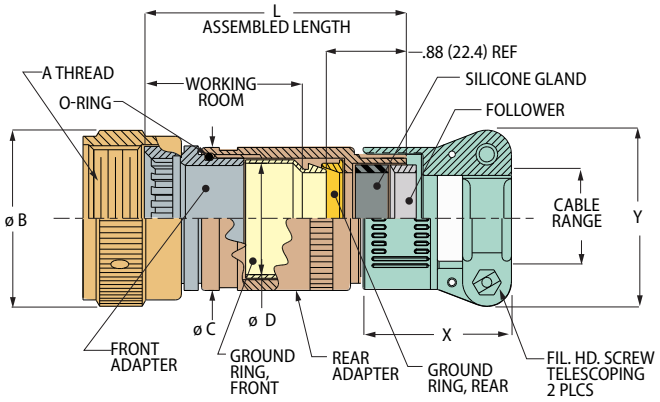

HOW TO ORDER

Sample Part Number →	390PS036	NF	2012	H
Base P/N	390PS036			
Material / Finish	**ME** = Aluminum / Electroless Nickel **MT** = Aluminum / Nickel PTFE **NF** = Aluminum / Olive Drab Cadmium **TZ** = Aluminum / Tin-Zinc **ZR** = Aluminum / Black Zinc-Nickel **Z1** = Stainless Steel / Passivated			
Size Code	See Table			
Strain Relief	**H** = Heavy Duty Saddle Clamp			

DIMENSIONS

Size Code	Shell Size	Cable Range Min. In.	Cable Range Min. mm.	Cable Range Max. In.	Cable Range Max. mm.	L Length ±.12 (3.0) In.	L Length ±.12 (3.0) mm.	Working Room In.	Working Room mm.	A Thread Class 2B	ø B Max. In.	ø B Max. mm.	ø C Max. In.	ø C Max. mm.	ø D Min. In.	ø D Min. mm.	X Max. In.	X Max. mm.	Y Ref. In.	Y Ref. mm.
1810	18	.375	9.53	.625	15.88	4.62	117.4	3.00	76.2	1.125-18 UNEF	1.44	36.6	1.406	35.71	1.000	25.40	1.281	32.54	1.312	33.32
1812		.438	11.13	.750	19.05	4.62	117.4	3.00	76.2	1.125-18 UNEF	1.44	36.6	1.406	35.71	1.000	25.40	1.312	33.32	1.593	40.46
1816		.625	15.88	.938	23.83	4.62	117.4	3.00	76.2	1.125-18 UNEF	1.44	36.6	1.531	38.89	1.125	28.58	1.406	35.71	1.750	44.45
2010	20	.375	9.53	.625	15.88	4.62	117.4	3.00	76.2	1.250-18 UNEF	1.54	39.1	1.531	38.89	1.125	28.58	1.281	32.54	1.312	33.32
2012		.438	11.13	.750	19.05	4.62	117.4	3.00	76.2	1.250-18 UNEF	1.54	39.1	1.531	38.89	1.125	28.58	1.312	33.32	1.593	40.46
2016		.625	15.88	.938	23.83	4.62	117.4	3.00	76.2	1.250-18 UNEF	1.54	39.1	1.656	42.06	1.250	31.75	1.406	35.71	1.750	44.45
2412	24	.438	11.13	.750	19.05	5.12	130.1	3.50	88.9	1.438-18 UNEF	1.73	43.9	1.656	42.06	1.250	31.75	1.312	33.32	1.593	40.46
2416		.625	15.88	.938	23.83	5.12	130.1	3.50	88.9	1.438-18 UNEF	1.73	43.9	1.781	45.24	1.375	34.93	1.593	40.46	1.750	44.45
2420		.875	22.23	1.250	31.75	5.12	130.1	3.50	88.9	1.438-18 UNEF	1.73	43.9	1.781	45.24	1.375	34.93	1.625	41.28	2.093	53.16
2816	28	.625	15.88	.938	23.83	5.12	130.1	3.50	88.9	1.812-16 UN	2.14	54.4	2.156	54.76	1.750	44.45	1.406	35.71	1.750	44.45
2820		.875	22.23	1.250	31.75	5.12	130.1	3.50	88.9	1.812-16 UN	2.14	54.4	2.156	54.76	1.750	44.45	1.593	40.46	2.093	53.16
2824		1.000	25.40	1.380	35.05	5.12	130.1	3.50	88.9	1.812-16 UN	2.14	54.4	2.156	54.76	1.750	44.45	1.625	41.28	2.343	59.51
3224	32	1.000	25.40	1.380	35.05	5.12	130.1	3.50	88.9	2.062-16 UNS	2.37	60.2	2.281	57.94	1.875	47.63	1.625	41.28	2.343	59.51
3228		1.250	31.75	1.625	41.28	6.12	155.5	4.50	114.3	2.062-16 UNS	2.37	60.2	2.281	57.94	1.875	47.63	1.900	48.26	2.750	69.85
3232		1.437	36.50	1.875	47.63	6.12	155.5	4.50	114.3	2.062-16 UNS	2.37	60.2	2.281	57.94	1.875	47.63	1.900	48.26	3.000	76.20
3624	36	1.000	25.40	1.375	34.93	6.12	155.5	4.50	114.3	2.250-16 UN	2.63	66.8	2.531	64.29	2.125	53.98	1.625	41.28	2.343	59.51
3628		1.250	31.75	1.625	41.28	6.12	155.5	4.50	114.3	2.250-16 UN	2.63	66.8	2.531	64.29	2.125	53.98	1.900	48.26	2.750	69.85
3632		1.437	36.50	1.875	47.63	6.12	155.5	4.50	114.3	2.250-16 UN	2.63	66.8	2.531	64.29	2.125	53.98	1.900	48.26	3.000	76.20
3640		1.875	47.63	2.375	60.33	6.62	168.2	5.00	127.0	2.250-16 UN	2.63	66.8	3.031	76.99	2.625	66.68	2.060	52.32	3.500	88.90
4024	40	1.000	25.40	1.375	34.93	6.12	155.5	4.50	114.3	2.500-16 UN	2.93	74.4	2.781	70.64	2.375	60.33	1.625	41.28	2.343	59.51
4028		1.250	31.75	1.625	41.28	6.12	155.5	4.50	114.3	2.500-16 UN	2.93	74.4	2.781	70.64	2.375	60.33	1.900	48.26	2.750	69.85
4032		1.437	36.50	1.875	47.63	6.12	155.5	4.50	114.3	2.500-16 UN	2.93	74.4	2.781	70.64	2.375	60.33	1.900	48.26	3.000	76.20
4040		1.875	47.63	2.375	60.33	6.62	168.2	5.00	127.0	2.500-16 UN	2.93	74.4	3.031	76.99	2.625	66.68	2.060	52.32	3.500	88.90

Backshells and Accessories

390PS086 EMI Cable Sealing Backshell w/ SST Cordgrip

Self-Locking

- **EMI environmental backshell for Series 970 PowerTrip® connectors**
- **SST wire mesh cord grip**

Heavy duty 390PS086 backshell with stainless steel wire mesh cordgrip fits Glenair Series 970 PowerTrip connectors. For use with shielded jacketed cable. Cone-and-ring shield termination . Withstands MIL-S-901 Grade A high impact shock. Type H saddle clamp has stainless steel telescoping fillister head screws and lockwashers. Meets AS85049 Category 1A water immersion (6 ft/48 hrs).

CONSTRUCTION

Coupling nut, body, ground rings, saddle clamp, follower: aluminum or SST
Hardware: stainless steel/passivated
Anti-decoupling spring: thermoplastic (aluminum body) or SST (SST body)
O-ring, grommet: silicone
Cord grip: stainless steel

HOW TO ORDER

Sample Part Number →	390PS086	TZ	3224
Base P/N	390PS086		
Material/Finish	**ME** = Aluminum / Electroless Nickel **MT** = Aluminum / Nickel PTFE **NF** = Aluminum / Olive Drab Cadmium **TZ** = Aluminum / Tin-Zinc **ZR** = Aluminum / Black Zinc-Nickel **Z1** = Stainless Steel / Passivated		
Size Code	See Table below		

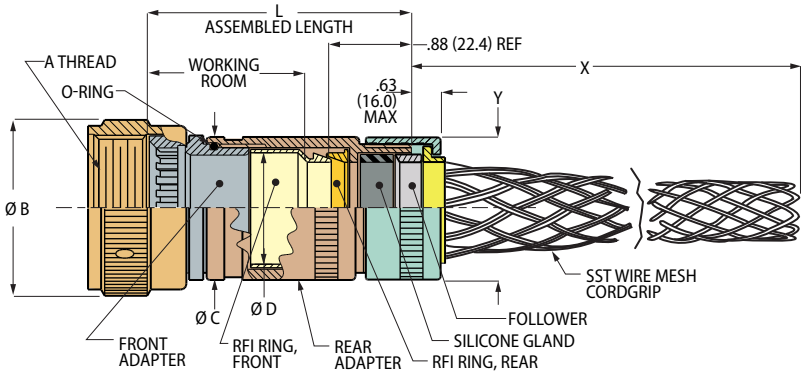

DIMENSIONS

Size Code	Shell Size	Cable Range Min. In.	Cable Range Min. mm.	Cable Range Max. In.	Cable Range Max. mm.	L Length ±.12 (3.0) In.	L Length ±.12 (3.0) mm.	Working Room In.	Working Room mm.	A Thread Class 2B	ø B Max. In.	ø B Max. mm.	ø C Max. In.	ø C Max. mm.	ø D Min. In.	ø D Min. mm.	X Ref. In.	X Ref. mm.	Y Max. In.	Y Max. mm.
1810	18	.500	12.7	.625	15.9	4.62	117.4	3.00	76.2	1.125-18 UNEF	1.44	36.6	1.406	35.71	1.000	25.40	4.37	111.0	1.16	29.5
1812		.625	15.9	.750	19.1	4.62	117.4	3.00	76.2	1.125-18 UNEF	1.44	36.6	1.406	35.71	1.000	25.40	6.00	152.4	1.34	34.0
1814		.750	19.1	.875	22.2	4.62	117.4	3.00	76.2	1.125-18 UNEF	1.44	36.6	1.531	38.89	1.125	28.58	5.00	127.0	1.59	40.4
2010	20	.500	12.7	.625	15.9	4.62	117.4	3.00	76.2	1.250-18 UNEF	1.54	39.1	1.531	38.89	1.125	28.58	4.37	111.0	1.16	29.5
2012		.625	15.9	.750	19.1	4.62	117.4	3.00	76.2	1.250-18 UNEF	1.54	39.1	1.531	38.89	1.125	28.58	6.00	152.4	1.34	34.0
2014		.750	19.1	.875	22.2	4.62	117.4	3.00	76.2	1.250-18 UNEF	1.54	39.1	1.656	42.06	1.250	31.75	5.00	127.0	1.59	40.4
2412	24	.625	15.9	.750	19.1	5.12	130.1	3.50	88.9	1.438-18 UNEF	1.73	43.9	1.656	42.06	1.250	31.75	6.00	152.4	1.34	34.0
2414		.750	19.1	.875	22.2	5.12	130.1	3.50	88.9	1.438-18 UNEF	1.73	43.9	1.781	45.24	1.375	34.93	5.00	127.0	1.59	40.4
2420		1.000	25.4	1.250	31.8	5.12	130.1	3.50	88.9	1.438-18 UNEF	1.73	43.9	1.781	45.24	1.375	34.93	6.25	158.8	1.94	49.3
2814	28	.750	19.1	.875	22.2	5.12	130.1	3.50	88.9	1.812-16 UN	2.14	54.4	2.156	54.76	1.750	44.45	5.00	127.0	1.59	40.4
2820		1.000	25.4	1.250	31.8	5.12	130.1	3.50	88.9	1.812-16 UN	2.14	54.4	2.156	54.76	1.750	44.45	6.25	158.8	1.94	49.3
2824		1.125	28.6	1.375	34.9	5.12	130.1	3.50	88.9	1.812-16 UN	2.14	54.4	2.156	54.76	1.750	44.45	7.25	184.2	2.19	55.6
3224	32	1.125	28.6	1.375	34.9	5.12	130.1	3.50	88.9	2.062-16 UNS	2.37	60.2	2.281	57.94	1.875	47.63	7.25	184.2	2.19	55.6
3228		1.375	34.9	1.625	41.3	6.12	155.5	4.50	114.3	2.062-16 UNS	2.37	60.2	2.281	57.94	1.875	47.63	8.00	203.2	2.43	61.7
3232		1.625	41.3	1.875	47.6	6.12	155.5	4.50	114.3	2.062-16 UNS	2.37	60.2	2.281	57.94	1.875	47.63	10.00	254.0	2.69	68.3
3624	36	1.125	28.6	1.375	34.9	6.12	155.5	4.50	114.3	2.250-16 UN	2.63	66.8	2.531	64.29	2.125	53.98	7.25	184.2	2.19	55.6
3628		1.375	34.9	1.625	41.3	6.12	155.5	4.50	114.3	2.250-16 UN	2.63	66.8	2.531	64.29	2.125	53.98	8.00	203.2	2.43	61.7
3632		1.625	41.3	1.875	47.6	6.12	155.5	4.50	114.3	2.250-16 UN	2.63	66.8	2.531	64.29	2.125	53.98	10.00	254.0	2.69	68.3
3640		2.125	54.0	2.375	60.3	6.62	168.2	5.00	127.0	2.250-16 UN	2.63	66.8	3.031	76.99	2.625	66.68	12.60	320.0	3.19	81.0
4024	40	1.125	28.6	1.375	34.9	6.12	155.5	4.50	114.3	2.500-16 UN	2.93	74.4	2.781	70.64	2.375	60.33	7.25	184.2	2.19	55.6
4028		1.375	34.9	1.625	41.3	6.12	155.5	4.50	114.3	2.500-16 UN	2.93	74.4	2.781	70.64	2.375	60.33	8.00	203.2	2.43	61.7
4032		1.625	41.3	1.875	47.6	6.12	155.5	4.50	114.3	2.500-16 UN	2.93	74.4	2.781	70.64	2.375	60.33	10.00	254.0	2.69	68.3
4040		2.125	54.0	2.375	60.3	6.62	168.2	5.00	127.0	2.500-16 UN	2.93	74.4	3.031	76.99	2.625	66.68	12.60	320.0	3.19	81.0

© 2024 Glenair, Inc • 1211 Air Way, Glendale, CA 91201 • 818-247-6000 • www.glenair.com • U.S. CAGE code 06324 • Series 970 PowerTrip Connectors
Dimensions in Inches (millimeters) are subject to change without notice.

Backshells and Accessories

660PS097 Plug Protective Cover

660PS097 protective cover fits Glenair Series 970 PowerTrip plug connectors. Available in aluminum or stainless steel. Stainless steel fittings.

HOW TO ORDER

Sample Part Number →	660PS097	NF	40	H	6	-06

Basic Number	**660PS097** = Protective Cover for Series 970 Plug Connectors
Material / Finish	**ME** = Aluminum / Electroless Nickel **MT** = Aluminum / Nickel PTFE **NF** = Aluminum / Olive Drab Cadmium **TZ** = Aluminum / Tin-Zinc **ZR** = Aluminum / Black Zinc-Nickel **Z1** = Stainless Steel / Passivated
Shell Size	**18 20 24 28 32 36 40**
Attachment Type	**N** = No Attachment See Table 1 for Attachment Types
Attachment Length	**Omit** if no Attachment Length in 1 Inch Increments *("6" = six inch length)*
Attachment Ring	**Omit** if no Attachment or Type SK Slip Knot **00** = No Ring See Table 2 for Ring Options

TABLE 1 ATTACHMENT TYPE

D — SST Bead Chain
.125 (3.2) diameter, size 6, -65° to +200°C

F — Wire Rope, Blue Nylon Jacket
6/6 nylon over stainless steel rope, fair flexibility, good abrasion resistance, -55 to +100 °C

G — Black Nylon Rope
Very flexible, good abrasion and fuel resistance, .094 (2.4) diameter, -55 to +100 °C

H — Wire Rope, Clear FEP Jacket
Clear FEP jacket over SST rope, fair flexibility, good abrasion resistance, .100" diameter, -65° to +200°C

S — Sash Chain
#8 sash chain, stainless steel.
Length tolerance is ± one link .280 (7.1)

SK — Nylon Rope with Slip Knot
Very flexible, good abrasion and fuel resistance, .094 (2.4) diameter. Length includes .5" (13mm) dia. loop, -55 to +100 °C

T — SST Wire Rope, No Jacket
Good flexibility, good abrasion resistance, .047 (1.2) diameter, passivated, -65° to +200°C

U — Wire Rope, Black Polyurethane
Stainless steel rope with black polyurethane coating, flexible, excellent abrasion resistanceand resistance to fuels, .080" (2mm) diameter, -55 to +125 °C

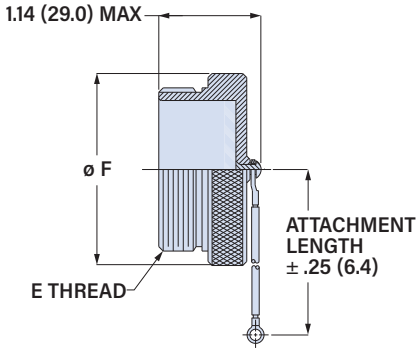

DIMENSIONS

Shell Size	E Thread	ø F Max. In.	ø F Max. mm.
18	1.125-18 UNEF-2A	1.417	36.0
20	1.250-18 UNEF-2A	1.535	39.0
24	1.4375-18 UNEF-2A	1.772	45.0
28	1.8125-16 UN-2A	2.007	51.0
32	2.0625-16 UNS-2A	2.244	57.0
36	2.250-16 UN-2A	2.480	63.0
40	2.500-16 UN-2A	2.716	69.0

TABLE 2 RING OPTIONS

EYELET		STYLE A RING		STYLE B RING		SPLIT RING	
Code	Eyelet I.D.	Code	Ring I.D.	Code	Ring I.D.	Code	Ring I.D.
-06	.125 (3.2)	-095	.312 (7.9)	-10	.593 (15.1)	-50	.425 (10.8)
-01	.145 (3.7)	-100	.391 (9.9)	-12	.718 (18.2)	-52	.485 (12.3)
-09	.156 (4.0)	-101	.516 (13.1)	-13	.765 (19.4)	-54	.640 (16.3)
-05	.167 (4.2)	-103	.641 (16.3)	-14	.844 (21.4)	-56	.750 (19.1)
-02	.182 (4.6)	-104	.708 (18)	-15	.890 (22.6)	-58	.890 (22.6)
-03	.191 (4.9)	-105	.766 (19.5)	-17	1.015 (25.8)	-60	1.015 (25.8)
-04	.197 (5.0)	-106	.896 (22.8)	-19	1.140 (29.0)	-62	1.095 (27.8)
-07	.218 (5.5)	-107	1.016 (25.8)	-20	1.203 (30.6)	-64	1.130 (28.7)
		-108	1.141 (29.0)	-21	1.265 (32.1)	-66	1.250 (31.8)
		-208	1.203 (30.6)	-22	1.343 (34.1)	-68	1.350 (34.3)
		-109	1.266 (32.2)	-24	1.484 (37.7)	-70	1.375 (34.9)
		-110	1.391 (35.3)	-27	1.640 (41.7)	-72	1.485 (37.7)
		-111	1.521 (38.6)	-29	1.765 (44.8)	-74	1.625 (41.3)
		-112	1.641 (41.7)	-30	1.890 (48.0)	-76	1.750 (44.5)
		-113	1.766 (44.9)	-31	1.953 (49.6)	-80	1.980 (50.3)
		-114	1.891 (48.0)	-33	2.077 (52.8)	-84	2.235 (56.8)
		-115	2.078 (52.8)	-36	2.187 (55.5)	-86	2.310 (58.7)
		-116	2.406 (61.1)	-40	2.406 (61.1)	-88	2.475 (62.9)
		-117	2.510 (63.8)	-44	2.656 (67.5)	-90	2.655 (67.4)

© 2024 Glenair, Inc • 1211 Air Way, Glendale, CA 91201 • 818-247-6000 • www.glenair.com • U.S. CAGE code 06324 • Series 970 PowerTrip Connectors

Dimensions in Inches (millimeters) are subject to change without notice.

Backshells and Accessories

660PS098 Receptacle Protective Cover

660PS098 protective cover fits Glenair Series 970 PowerTrip receptacle connectors. Available in aluminum or stainless steel. Stainless steel fittings.

HOW TO ORDER

	Sample Part Number → 660PS098	TZ	20	U	5	-01
Basic Number	**660PS098** = Protective Cover for Series 970 Receptacle Connectors					
Material / Finish	**ME** = Aluminum / Electroless Nickel **MT** = Aluminum / Nickel PTFE **NF** = Aluminum / Olive Drab Cadmium **TZ** = Aluminum / Tin-Zinc **ZR** = Aluminum / Black Zinc-Nickel **Z1** = Stainless Steel / Passivated					
Shell Size	**18 20 24 28 32 36 40**					
Attachment Type	**N** = No Attachment See Table 1 for Attachment Types					
Attachment Length	**Omit** if no Attachment Length in 1 Inch Increments ("6" = six inch length)					
Attachment Ring	**Omit** if no Attachment or Type SK Slip Knot **00** = No Ring See Table 2 for Ring Options					

TABLE 1 ATTACHMENT TYPE

D —
SST Bead Chain
.125 (3.2) diameter, size 6, -65° to +200°C

F — 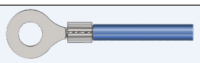
Wire Rope, Blue Nylon Jacket
6/6 nylon over stainless steel rope, fair flexibility, good abrasion resistance, -55 to +100 °C

G —
Black Nylon Rope
Very flexible, good abrasion and fuel resistance, .094 (2.4) diameter, -55 to +100 °C

H —
Wire Rope, Clear FEP Jacket
Clear FEP jacket over SST rope, fair flexibility, good abrasion resistance, .100" diameter, -65° to +200°C

S —
Sash Chain
#8 sash chain, stainless steel.
Length tolerance is ± one link .280 (7.1)

SK —
Nylon Rope with Slip Knot
Very flexible, good abrasion and fuel resistance, .094 (2.4) diameter. Length includes .5" (13mm) dia. loop, -55 to +100 °C

T —
SST Wire Rope, No Jacket
Good flexibility, good abrasion resistance, .047 (1.2) diameter, passivated, -65° to +200°C

U — 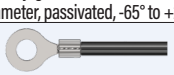
Wire Rope, Black Polyurethane
Stainless steel rope with black polyurethane coating, flexible, excellent abrasion resistanceand resistance to fuels, .080" (2mm) diameter, -55 to +125 °C

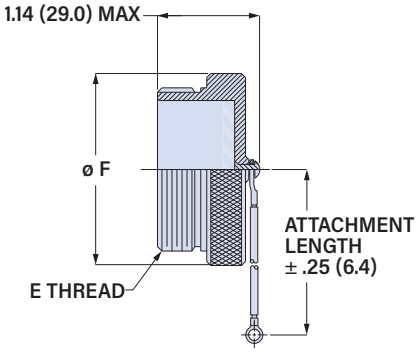

DIMENSIONS

Shell Size	E Thread	ø F Max. In.	ø F Max. mm.
18	1.125-18 UNEF-2B	1.417	36.0
20	1.250-18 UNEF-2B	1.535	39.0
24	1.4375-18 UNEF-2B	1.772	45.0
28	1.8125-16 UN-2B	2.007	51.0
32	2.0625-16 UNS-2B	2.244	57.0
36	2.250-16 UN-2B	2.480	63.0
40	2.500-16 UN-2B	2.716	69.0

TABLE 2 ATTACHMENT RING OPTIONS

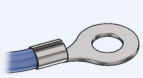

EYELET Code	EYELET Eyelet I.D.	STYLE A RING Code	STYLE A RING Ring I.D.	STYLE B RING Code	STYLE B RING Ring I.D.	SPLIT RING Code	SPLIT RING Ring I.D.
-06	.125 (3.2)	-095	.312 (7.9)	-10	.593 (15.1)	-50	.425 (10.8)
-01	.145 (3.7)	-100	.391 (9.9)	-12	.718 (18.2)	-52	.485 (12.3)
-09	.156 (4.0)	-101	.516 (13.1)	-13	.765 (19.4)	-54	.640 (16.3)
-05	.167 (4.2)	-103	.641 (16.3)	-14	.844 (21.4)	-56	.750 (19.1)
-02	.182 (4.6)	-104	.708 (18)	-15	.890 (22.6)	-58	.890 (22.6)
-03	.191 (4.9)	-105	.766 (19.5)	-17	1.015 (25.8)	-60	1.015 (25.8)
-04	.197 (5.0)	-106	.896 (22.8)	-19	1.140 (29.0)	-62	1.095 (27.8)
-07	.218 (5.5)	-107	1.016 (25.8)	-20	1.203 (30.6)	-64	1.130 (28.7)
		-108	1.141 (29.0)	-21	1.265 (32.1)	-66	1.250 (31.8)
		-208	1.203 (30.6)	-22	1.343 (34.1)	-68	1.350 (34.3)
		-109	1.266 (32.2)	-24	1.484 (37.7)	-70	1.375 (34.9)
		-110	1.391 (35.3)	-27	1.640 (41.7)	-72	1.485 (37.7)
		-111	1.521 (38.6)	-29	1.765 (44.8)	-74	1.625 (41.3)
		-112	1.641 (41.7)	-30	1.890 (48.0)	-76	1.750 (44.5)
		-113	1.766 (44.9)	-31	1.953 (49.6)	-80	1.980 (50.3)
		-114	1.891 (48.0)	-33	2.077 (52.8)	-84	2.235 (56.8)
		-115	2.078 (52.8)	-36	2.187 (55.5)	-86	2.310 (58.7)
		-116	2.406 (61.1)	-40	2.406 (61.1)	-88	2.475 (62.9)
		-117	2.510 (63.8)	-44	2.656 (67.5)	-90	2.655 (67.4)

© 2024 Glenair, Inc • 1211 Air Way, Glendale, CA 91201 • 818-247-6000 • www.glenair.com • U.S. CAGE code 06324 • Series 970 PowerTrip Connectors
Dimensions in Inches (millimeters) are subject to change without notice.

Backshells and Accessories

780-001 Bean Rubber Cover for Series 970 Plug Connector

Neoprene, silicone or fluorosilicone. 780-001 cover fits Series 970 PowerTrip plug connectors. Rugged molded rubber "Mr. Bean" cover slides over connector coupling nut to protect from damage. Four material choices: black neoprene, carbon-filled conductive black neoprene, red silicone or blue fluorosilicone. Attach cover with nylon rope. Attachment choices include cable tie, slip knot or stainless steel ring. Non-environmental.

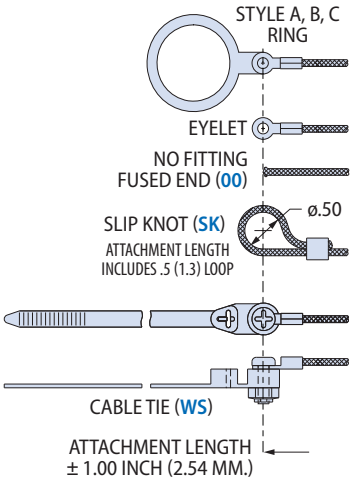

HOW TO ORDER

Sample Part Number →	780-001	-22	G	6	-06

Basic Number	780-001 = Bean Rubber Cover for Series 970 Plug Connectors
Size	See Table 1 for Size Code
Attachment Type	**Omit** for no Attachment **G** = Nylon Rope
Attachment Length	**Omit** if no Attachment Length in 1 Inch Increments ("6" = six inch length)
Attachment Fitting	**Omit** if no Attachment **00** = No Fitting See Table 2 for Attachment Fitting Codes
Material	**Omit** for non-conductive black neoprene **C** = Conductive Black Neoprene **F** = Blue Fluorosilicone **S** = Red Silicone

TABLE 1 SIZE CODE

Shell Size	Size Code	øA		øB		C		øD	
		In.	mm.	In.	mm.	In.	mm.	In.	mm.
18	-19	1.58	40.1	1.36	34.5	1.25	31.8	2.18	55.4
20	-22	1.68	42.7	1.44	36.6	1.25	31.8	2.31	58.7
24	-25	1.96	49.8	1.74	44.2	1.25	31.8	2.68	68.1
28	-32	2.31	58.7	2.13	54.1	1.25	31.8	2.98	75.7
32	-36	2.56	65.0	2.32	58.9	1.25	31.8	3.21	81.5
36	-38	2.76	70.1	2.50	63.5	1.25	31.8	3.21	81.5
40	-44	3.06	77.7	2.84	72.1	1.56	39.6	3.58	90.9

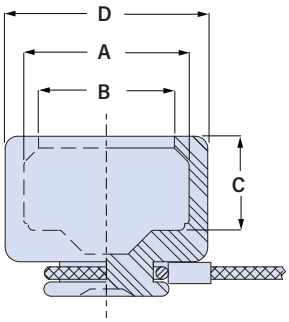

TABLE 2 ATTACHMENT RING OPTIONS

EYELET		STYLE A RING		STYLE B RING		SPLIT RING	
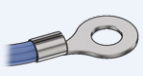							
Code	Eyelet I.D.	Code	Ring I.D.	Code	Ring I.D.	Code	Ring I.D.
-06	.125 (3.2)	-095	.312 (7.9)	-10	.593 (15.1)	-50	.425 (10.8)
-01	.145 (3.7)	-100	.391 (9.9)	-12	.718 (18.2)	-52	.485 (12.3)
-09	.156 (4.0)	-101	.516 (13.1)	-13	.765 (19.4)	-54	.640 (16.3)
-05	.167 (4.2)	-103	.641 (16.3)	-14	.844 (21.4)	-56	.750 (19.1)
-02	.182 (4.6)	-104	.708 (18)	-15	.890 (22.6)	-58	.890 (22.6)
-03	.191 (4.9)	-105	.766 (19.5)	-17	1.015 (25.8)	-60	1.015 (25.8)
-04	.197 (5.0)	-106	.896 (22.8)	-19	1.140 (29.0)	-62	1.095 (27.8)
-07	.218 (5.5)	-107	1.016 (25.8)	-20	1.203 (30.6)	-64	1.130 (28.7)
SLIP KNOT		-108	1.141 (29.0)	-21	1.265 (32.1)	-66	1.250 (31.8)
		-208	1.203 (30.6)	-22	1.343 (34.1)	-68	1.350 (34.3)
		-109	1.266 (32.2)	-24	1.484 (37.7)	-70	1.375 (34.9)
		-110	1.391 (35.3)	-27	1.640 (41.7)	-72	1.485 (37.7)
Code -SK		-111	1.521 (38.6)	-29	1.765 (44.8)	-74	1.625 (41.3)
CABLE TIE		-112	1.641 (41.7)	-30	1.890 (48.0)	-76	1.750 (44.5)
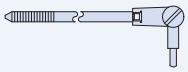		-113	1.766 (44.9)	-31	1.953 (49.6)	-80	1.980 (50.3)
		-114	1.891 (48.0)	-33	2.077 (52.8)	-84	2.235 (56.8)
		-115	2.078 (52.8)	-36	2.187 (55.5)	-86	2.310 (58.7)
Code -WS		-116	2.406 (61.1)	-40	2.406 (61.1)	-88	2.475 (62.9)
Black 6/6 nylon cable tie		-117	2.510 (63.8)	-44	2.656 (67.5)	-90	2.655 (67.4)

Backshells and Accessories

780-002 Bean Rubber Cover for Series 970 Receptacle Connector

Neoprene, silicone or fluorosilicone. 780-002 cover fits Series 970 PowerTrip receptacle connectors. Rugged molded rubber "Mr. Bean" protects connector from damage. Four material choices: black neoprene, carbon-filled conductive black neoprene, red silicone or blue fluorosilicone. Attach cover with nylon rope. Attachment choices include cable tie, slip knot or stainless steel ring. Non-environmental.

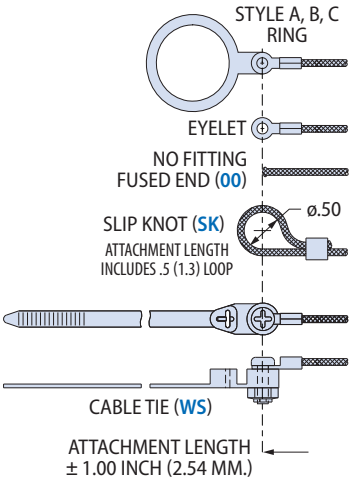

HOW TO ORDER

	Sample Part Number →	780-002	-22	G	6	-06
Basic Number	**780-002** = Bean Rubber Cover for Series 970 Receptacle Connectors					
Size	See Table 1 for Size Code					
Attachment Type	**Omit** for no Attachment **G** = Nylon Rope					
Attachment Length	**Omit** if no Attachment Length in 1 Inch Increments *("6" = six inch length)*					
Attachment Fitting	**Omit** if no Attachment **00** = No Fitting See Table 2 for Attachment Fitting Codes					
Material	**Omit** for non-conductive black neoprene **C** = Conductive Black Neoprene **F** = Blue Fluorosilicone **S** = Red Silicone					

TABLE 1 SIZE CODE

Shell Size	Size Code	øA In.	øA mm.	øB In.	øB mm.	C In.	C mm.	øD In.	øD mm.
18	-14	1.18	30.0	.96	24.4	.63	16.0	1.68	42.7
20	-16	1.31	33.3	1.09	27.7	.63	16.0	1.81	46.0
24	-22	1.68	42.7	1.46	37.1	.63	16.0	2.31	58.7
28	-24	1.80	45.7	1.59	40.4	.69	17.5	2.43	61.7
32	-27	2.16	54.9	1.75	44.5	.69	17.5	2.64	67.1
36	-32	2.31	58.7	2.13	54.1	.69	17.5	2.98	75.7
40	-36	2.56	65.0	2.32	58.9	.69	17.5	3.21	81.5

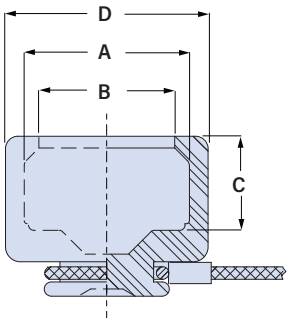

TABLE 2 ATTACHMENT RING OPTIONS

EYELET		STYLE A RING		STYLE B RING		SPLIT RING	
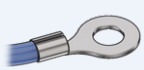							
Code	Eyelet I.D.	Code	Ring I.D.	Code	Ring I.D.	Code	Ring I.D.
-06	.125 (3.2)	-095	.312 (7.9)	-10	.593 (15.1)	-50	.425 (10.8)
-01	.145 (3.7)	-100	.391 (9.9)	-12	.718 (18.2)	-52	.485 (12.3)
-09	.156 (4.0)	-101	.516 (13.1)	-13	.765 (19.4)	-54	.640 (16.3)
-05	.167 (4.2)	-103	.641 (16.3)	-14	.844 (21.4)	-56	.750 (19.1)
-02	.182 (4.6)	-104	.708 (18)	-15	.890 (22.6)	-58	.890 (22.6)
-03	.191 (4.9)	-105	.766 (19.5)	-17	1.015 (25.8)	-60	1.015 (25.8)
-04	.197 (5.0)	-106	.896 (22.8)	-19	1.140 (29.0)	-62	1.095 (27.8)
-07	.218 (5.5)	-107	1.016 (25.8)	-20	1.203 (30.6)	-64	1.130 (28.7)
SLIP KNOT		-108	1.141 (29.0)	-21	1.265 (32.1)	-66	1.250 (31.8)
		-208	1.203 (30.6)	-22	1.343 (34.1)	-68	1.350 (34.3)
		-109	1.266 (32.2)	-24	1.484 (37.7)	-70	1.375 (34.9)
		-110	1.391 (35.3)	-27	1.640 (41.7)	-72	1.485 (37.7)
Code -SK		-111	1.521 (38.6)	-29	1.765 (44.8)	-74	1.625 (41.3)
CABLE TIE		-112	1.641 (41.7)	-30	1.890 (48.0)	-76	1.750 (44.5)
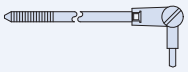		-113	1.766 (44.9)	-31	1.953 (49.6)	-80	1.980 (50.3)
		-114	1.891 (48.0)	-33	2.077 (52.8)	-84	2.235 (56.8)
		-115	2.078 (52.8)	-36	2.187 (55.5)	-86	2.310 (58.7)
Code -WS		-116	2.406 (61.1)	-40	2.406 (61.1)	-88	2.475 (62.9)
Black 6/6 nylon cable tie		-117	2.510 (63.8)	-44	2.656 (67.5)	-90	2.655 (67.4)

© 2024 Glenair, Inc • 1211 Air Way, Glendale, CA 91201 • 818-247-6000 • www.glenair.com • U.S. CAGE code 06324 • Series 970 PowerTrip Connectors
Dimensions in Inches (millimeters) are subject to change without notice.

Backshells and Accessories

930-014 Flange Gasket

930-014 FLANGE GASKET

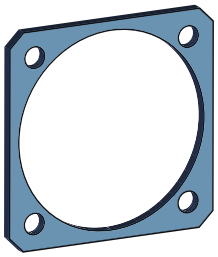

Flange mount gaskets protect equipment from moisture ingress and contamination. Conductive gaskets reduce EMI problems. These die-cut elastomeric gaskets fit Series 970 square flange receptacles.

HOW TO ORDER

Sample Part Number →	930-014	F	36
Base P/N	**930-014** = Gasket for Series 970 Square Flange Receptacle		
Material	**F** = Fluorosilicone **V** = Viton **X** = Conductive Silver-Filled Fluorosilicone		
Shell Size	**18 20 24 28 32 36 40**		

DIMENSIONS

Shell Size	A Bsc.		B Dia.		C Typ.		D Dia.	
	In.	mm.	In.	mm.	In.	mm.	In.	mm.
18	1.015	25.78	1.187	30.15	1.383	35.13	.146	3.71
20	1.140	28.96	1.374	34.90	1.508	38.30	.146	3.71
24	1.281	32.54	1.562	39.67	1.718	43.64	.146	3.71
28	1.568	39.83	1.874	47.60	2.138	54.31	.170	4.32
32	1.734	44.04	2.062	52.37	2.328	59.13	.170	4.32
36	1.984	50.39	2.302	58.47	2.578	65.48	.170	4.32
40	2.234	56.74	2.562	65.07	2.828	71.83	.170	4.32

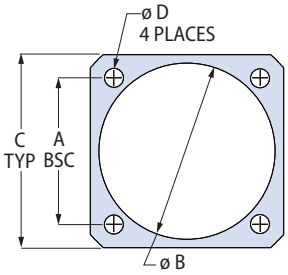

.032 (0.81) THICK

Fluorosilicone (FVMQ) offers excellent resistance to hydrocarbons, oils, petroleum fuels and greases. Suitable for use with mineral-based hydraulic fluids. Continuous operating temperature -6 0°C to +175 °C, +200 °C intermittent. Meets MIL-DTL-25988.

Viton® fluoroelastomer (FKM) offers excellent resistance to high temperatures, ozone and solvents. Continuous operating temperature -20 °C to +200 °C.

Conductive Fluorosilicone is silver-filled and has excellent corrosion resistance. 90 dB plane wave shielding effectiveness at 10GHz, continuous operating temperature -55 °C to +160 °C, resistant to solvents and fuels. Material meets MIL-DTL-83528 Type D.

Connectors and Accessories
809-532 Self-Locking Jam Nut

809-532 SELF-LOCKING JAM NUT

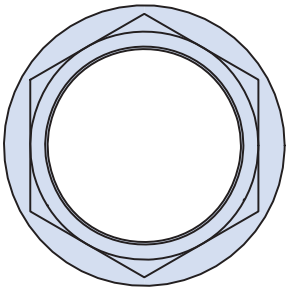

Self-Locking 809-532 jam nut fits Series 970 receptacles. Jam nut has three Vespel® inserts installed with RTV sealant. Originally used on manned space vehicles, this jam nut eliminates the need for safety wire or threadlocking compound. Nut has groove for attaching a tether if required.

® Vespel is a registered trademark of Dupont Polymers, Inc.

HOW TO ORDER

Sample Part Number →	809-532	-ME	20
Basic Number	**809-532** = Self-Locking Jam Nut for Series 970 Connectors		
Material / Finish	**ME** = Aluminum / Electroless Nickel **MT** = Aluminum / Nickel PTFE **NF** = Aluminum / Olive Drab Cadmium **TZ** = Aluminum / Tin-Zinc **ZR** = Aluminum / Black Zinc-Nickel **Z1** = Stainless Steel / Passivated		
Shell Size	**18 20 24 28 32 36 40**		

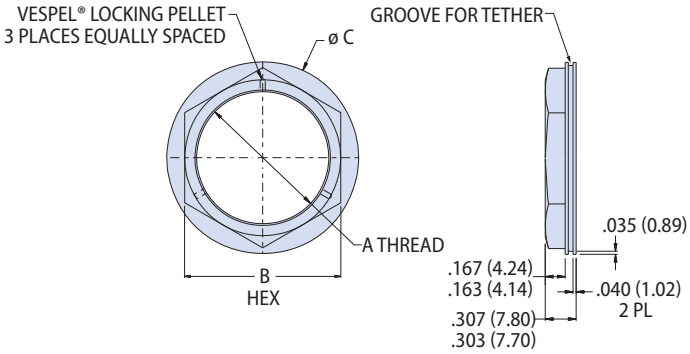

DIMENSIONS

Shell Size	A Thread	ø B In.	ø B mm.	ø C In.	ø C mm.
18	1.250-18UNEF-2B	1.438	36.53	1.838	46.69
20	1.4375-18UNEF-2B	1.625	41.28	2.025	51.43
24	1.625-18UNEF-2B	1.822	46.28	2.225	56.52
28	1.9375-18UNEF-2B	2.188	55.58	2.585	65.66
32	2.125-18UNEF-2B	2.375	60.33	2.775	70.49
36	2.375-18UNEF-2B	2.625	66.68	3.150	80.01
40	2.625-18UNEF-2B	2.875	73.02	3.450	87.63

© 2024 Glenair, Inc • 1211 Air Way, Glendale, CA 91201 • 818-247-6000 • www.glenair.com • U.S. CAGE code 06324 • Series 970 PowerTrip Connectors
Dimensions in Inches (millimeters) are subject to change without notice.

turboflex®

Ultra-flexible and rugged power distribution cables and high-voltage cable assemblies

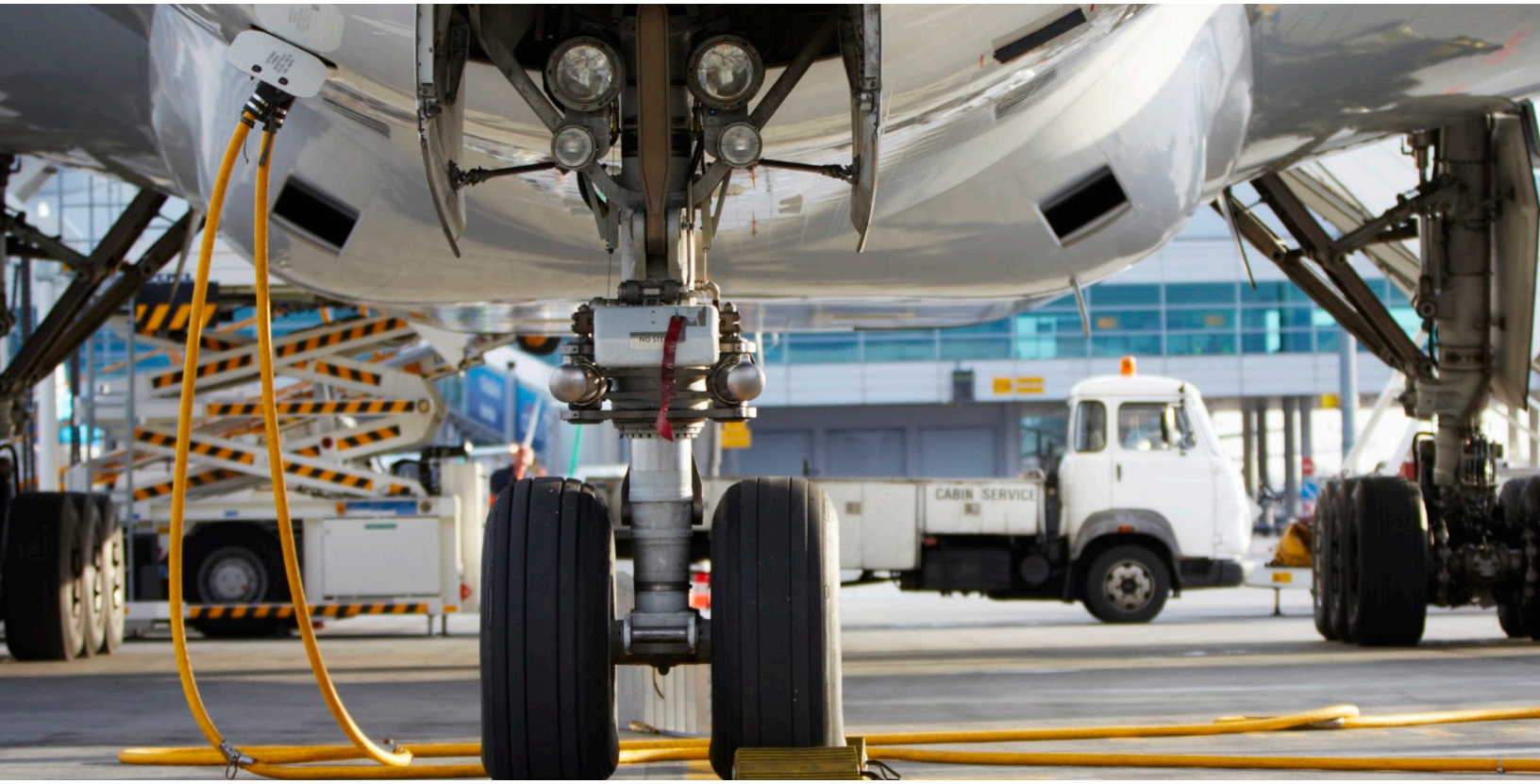

Power distribution cables present a unique challenge to electrical wire interconnect system engineers. Typically fabricated from stiff, non-flexible conductors and jackets with extremely large bend radii, such cables are heavy, hard to route, and prone to insulation damage from weathering and abrasion. TurboFlex® power distribution cables—and complex high-voltage cable assemblies—are constructed from high strand-count rope-lay inner conductors made with tin, nickel, or silver-plated copper, nickel-plated aluminum, or bare copper. These highly-flexible conductors, combined with Glenair's high-performance Duralectric™ insulation result in cables ideally suited for applications where flexibility, durability, and weight reduction are required. The signature Duralectric™ insulation compound provides outstanding resistance to temperature extremes, ozone exposure, caustic chemicals including jet fuel, gamma radiation, and other forms of environmental and mechanical damage. Long life and performance are critical in power distribution applications. TurboFlex, with its flexible conductors and Duralectric™ jacketing delivers both.

Ultra-flexible rope-lay construction

Wire rope assemblies for equipment grounding

Available in turnkey high-voltage cable assemblies

turboflex®

- **Ultra-flexible rope-lay power cable construction**
- **Turnkey high-voltage cable assemblies with Glenair signature connectors**
- **Broad range of gauges from 20 AWG to 450 MCM**
- **Low-smoke, zero halogen, and RoHS compliant**

DURALECTRIC™

- **High-performance Duralectric™ D jacketing standard**
- **Lightweight (L), radiation-resistant/low-temperature (K), jet fuel/chemical-resistant (F), and high-conductivity (C)**

MISSION-CRITICAL

INTERCONNECT SOLUTIONS

Glenair, Inc.
1211 Air Way • Glendale, California • 91201-2497
Telephone: 818-247-6000 • Fax: 818-500-9912 • sales@glenair.com
www.glenair.com

Glenair East
20 Sterling Drive
Wallingford, CT
06492
Telephone:
203-741-1115
Facsimile:
203-741-0053
sales@glenair.com

Glenair UK Ltd
40 Lower Oakham Way
Oakham Business Park
Mansfield, Notts
NG18 5BY England
Telephone:
+44-1623-638100
Facsimile:
+44-1623-638111
sales@glenair.co.uk

Glenair Microway Systems
7000 North Lawndale Avenue
Lincolnwood, IL
60712
Telephone:
847-679-8833
Facsimile:
847-679-8849

Glenair Nordic AB
Gustav III:s Boulevard 42
SE-169 27 Solna
Sweden
Telephone:
+46-8-50550000
sales@glenair.se

Glenair GmbH
Schaberweg 28
61348 Bad Homburg
Germany
Telephone:
06172 / 68 16 0
Facsimile:
06172 / 68 16 90
info@glenair.de

Glenair Iberica S.L.
Av. De Manoteras, 24 – 2º
28050 Madrid
Spain
Telephone:
+34 915 562 687
sales@glenair.es

Glenair Italia S.p.A.
Via Del Lavoro, 7
40057 Quarto Inferiore –
Granarolo dell'Emilia
Bologna, Italy
Telephone:
+39-051-782811
Facsimile:
+39-051-782259
info@glenair.it

Glenair France SARL
7, Avenue Parmentier
Immeuble Central Parc #2
31200 Toulouse
France
Telephone:
+33-5-34-40-97-40
Facsimile:
+33-5-61-47-86-10
sales@glenair.fr

Glenair Korea
6-21Tapsil-ro 58beon-gil
Giheung-gu, Yongin-si
Gyeonggi-do
Republic of Korea
Telephone:
+82-07-5067-2437
Facsimile:
+82-504-375-4549
sales@glenair.kr

Glenair Japan
40F, Nagoya Lucent Tower,
6-1, Ushijima-cho,
Nishi-ku, Nagoya, 451-6040
Japan
Telephone:
+81-52-569-2521
Facsimile:
+81-52-569-2523
sales@glenair.jp

© 2024 Glenair, Inc.

Printed in U.S.A.

CAT-116 • May 2024