MISSION-CRITICAL
INTERCONNECT SOLUTIONS

Glenair®



BETTER THAN QPL

SuperNine D38999 Series III Type Connectors and Cables

High-Performance Crimp-Contact Environmental, Hermetic, High-Speed, and EMI/EMP Filter Connectors

MAY 2022

Glenair®

MISSION-DRIVEN DESIGN

SERIES 23 SUPERNINE®

Advanced-Performance MIL-DTL-38999 Series III

Improved electrical, mechanical, and environmental performance compared to mil-standard D38999



Better than QPL: the world's most comprehensive line of high-performance MIL-DTL-38999 Series III type connectors—environmental series, space-grade, EMI/RFI filters, hermetics, fiber optics, and more

SuperNine®

ADVANCED PERFORMANCE

SuperNine®

MIL-DTL-38999 Series III Type

Catalog table of contents

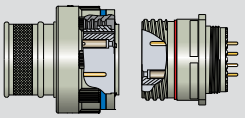

Introducing SuperNine®

Glenair SuperNine™ MIL-DTL-38999 Series III type connector classes for environmental, hermetic, high-speed, high-pressure, space-grade and EMI/EMP applications



SuperNine® Environmental I/O, Cable, and PCB Connectors

Crimp and PC tail connectors with optional banding platforms—plus high-durability contacts, piston-seal environmental versions and blind-mate space-grade solutions



SuperNine® High-Speed Environmental Connectors

High-speed Ethernet, datalink, and video interconnect solutions incorporating Coax, Twinax, Quadrax and El Ochito® octaxial shielded contact technologies



SuperNine® Hermetic Connectors

Box, wall, and solder mount glass-seal hermetics for high-pressure/low-leak applications—plus special crimp contact and lightweight CODE RED hermetic solutions



SuperNine® Ruggedized RJ45 and USB Connectors

SuperSeal™ RJ45 and USB field connectors with superior sealing, grounding, and crimp contact termination



SuperNine® EMI/EMP Filter Connectors

EMI/EMP planar array capacitor filters and TVS diode-equipped interconnects intermateable with all standard MIL-DTL-38999 Series III plugs and receptacles



SuperNine® Fiber Optic Connectors

Fiber Optic interconnect solutions for long distance and high bandwidth applications, including Ethernet, video, and other forms of high-speed data



SuperNine® Backshells and Accessories

High-performance metal and composite thermoplastic connector backshells and accessories optimized for use with SuperNine® high-performance connectors



SuperNine® Contacts and Tools

MIL-DTL-39029 crimp, power and signal contacts, plus the industry's broadest range of shielded RF contacts including El Ochito®, Quadrax, Twinax and Coax designs



Appendix

PCB Footprints
Part Number List

© 2022 Glenair, Inc • 1211 Air Way, Glendale, CA 91201 • 818-247-6000 • www.glenair.com • U.S. CAGE code 06324 • SuperNine® Catalog
Dimensions in Inches (millimeters) are subject to change without notice.



BETTER THAN QPL

SuperNine®: The advanced-performance MIL-DTL-38999 Series III style connector

Better than QPL? SuperNine® is the interconnect industry's most complete and advanced D38999 Series III type connector family. From IP68 rated environmental-class connectors with improved durability and ease-of-use, to EMI/EMP filter connectors with innovative flange and PC tail termination configurations, SuperNine® offers military and commercial aerospace customers that have standardized on Series III technology the opportunity to improve interconnect system performance and resolve a wide range of persistent electrical, environmental, and mechanical performance problems—all with Catalog (COTS) connector solutions backed by Glenair's high-availability business model.

Better than QPL means significant innovation in every class of connector in the series. SuperNine® hermetics for example, offer many features not available in QPL hermetic solutions, such as crimp-removable socket contacts. Our fiber optic connector series is designed and built to tight-tolerances to ensure precise alignment of fiber optic termini, and superior optical performance.

SuperNine® offers improved durability, sealing, cost-of-ownership, ease of shield termination, a broader range of PC tail configurations, environmental and hermetic bulkhead feed-thrus, connector savers, off-the-shelf EMI/EMP filter connectors and more—all supported with Glenair's well-established reputation for service, support, and fast turnaround.

THE SUPERNINE® TECHNOLOGY PROMISE

- **Across-the-board improvements in mating-cycle and contact durability**
- **Advanced ease-of-use features such as integrated band porches and PC-Tail standoffs**
- **Advanced-performance improvements in every connector class—from filters to fiber optics**



Glenair SuperNine® connectors in action: in this example, a pair of our advanced fiber optic interconnects cabled-up in a turnkey, environmentally sealed point-to-point jumper

© 2022 Glenair, Inc • 1211 Air Way, Glendale, CA 91201 • 818-247-6000 • www.glenair.com • U.S. CAGE code 06324 • SuperNine® Catalog
Dimensions in Inches (millimeters) are subject to change without notice.

ADVANCED PERFORMANCE

SuperNine®

MIL-DTL-38999 Series III Type

Overview: SuperNine series connector classes and types

SuperNine® Environmental I/O, Cable and PCB Connectors



- Plug connectors with material class and banding porch options
- Complete range of IP68 PC tail receptacles with high-durability contacts
- Five different designs of printed circuit board connector standoffs
- All MIL-STD-1560 as well as high-density insert arrangements
- High-durability vibration and shock coupling

SuperNine® High-Speed Connectors



- Full range of hybrid insert arrangements incorporating size #22D signal contacts, plus size #16, #12 and #8 keyed shielded contacts
- El Ochito®: One full 10G Ethernet channel per standard size #8 cavity
- Supported applications: 10/100/1G/10G BASE-T Ethernet, analog/digital video, 1553 databus and general RF or differential data transmission
- Turnkey Quadrax and El Ochito® solutions—from contacts to connectors, wire and termination hardware

SuperNine® High-Pressure Hermetic Connectors



- Glass-to-metal seal hermetics with sealing up to $1x10^{-10}$cc/sec
- DSCC qualified and derivative solutions with advanced mounting features
- Pressure resistance to 32,000+ psi
- Stainless steel, titanium, Kovar® and Inconel® shell material options
- Bulkhead feed-through and hull penetrator versions
- Lightweight CODE RED hermetics with $1x10^{-7}$ max sealing

SuperNine® Ruggedized RJ45 and USB Field Connectors



- Insert-to-shell grounding for superior EMC continuity and shielding
- Superior environmental sealing to IP67 compared to COTS solutions
- Advanced vibration and mechanical shock tolerance
- Full range of offerings for Cat 5e and 6A Ethernet: jacks, plugs, PC tail and crimp
- High-temperature rated -40° to +125°C

SuperNine® EMI/EMP Filter Connectors



- Planar, multilayer ceramic capacitive filters with and without TVS diodes
- C, L-C, C-L, and Pi filter electrical configurations
- Special high operating temperature solutions
- Industry's broadest range of capacitance: from 10 to 1,000,000 pF
- Fast and reliable in-house manufacturing of all filter elements and processes

SuperNine® Fiber Optic Connectors



- Ultra-lightweight composite thermoplastic connector solutions
- Qualified size #16 MIL-PRF-29504 pin-socket precision ceramic termini
- Ultra-tight tolerance shell and cavity dimensions for precise axial alignment
- Ultra-low insertion loss values for both singlemode and multimode
- Insert arrangements from 2 to 37 ways

© 2022 Glenair, Inc • 1211 Air Way, Glendale, CA 91201 • 818-247-6000 • www.glenair.com • U.S. CAGE code 06324 • SuperNine® Catalog
Dimensions in Inches (millimeters) are subject to change without notice.

ADVANCED PERFORMANCE

SuperNine®

MIL-DTL-38999 Series III Type

Advanced mechanical features

The Series 23 SuperNine® advanced performance connector series rolls up many of the technology advances Glenair has pioneered in our environmental, hermetic, and filter connectors into a comprehensive high-performance connector series. SuperNine® is intermateable with all industry-standard D38999 solutions and accommodates Glenair's broad range of connector designator "H" backshells, protective covers, shrink boots and lightweight composite accessories. SuperNine® combines innovative mechanical design and materials selection (see next page) resulting in the industry's best performing aerospace-ready connector series.

IMPROVED DURABILITY AND MECHANICAL/ENVIRONMENTAL PERFORMANCE



Tight Tolerance Ultra Low dB Loss Fiber Optics



1500 Mating Cycle Coupling Nut and Contact



High Vibration Performance IAW Bell Helicopter and Boeing Specs



Available Sav-Con® Connector Saver Go-Between

IMPROVED EASE-OF-USE



High-density contact arrangements



Integrated Shield Termination Band Porch



Diverse Range of PC Tail Stand-Offs



Available Bulk Head Feed-Thrus

EXPANDED FUNCTIONALITY

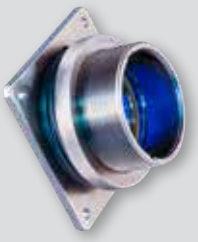

Zero Extraction Force Designs



Metal Ground Plane Inserts

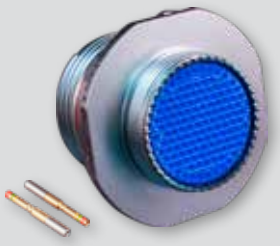

Hermetic with Crimp Contacts



Quick-Disconnect Lanyard-Release Assemblies

© 2022 Glenair, Inc • 1211 Air Way, Glendale, CA 91201 • 818-247-6000 • www.glenair.com • U.S. CAGE code 06324 • SuperNine® Catalog
Dimensions in Inches (millimeters) are subject to change without notice.

ADVANCED PERFORMANCE

SuperNine®

MIL-DTL-38999 Series III Type

Advanced material performance

RoHS COMPLIANT FINISH OPTIONS



Electroless Nickel

Cost	$ $
Conductivity	+ + +
Corrosion Resistance	

-65 to +200°C

Glenair Code ME



Black Zinc Nickel

Cost	$ $ $ $
Conductivity	+ + +
Corrosion Resistance	

-65 to +175°C

Glenair Code ZR



Nickel-PTFE

Cost	$ $ $ $
Conductivity	+ + + + +
Corrosion Resistance	

-65 to +175°C

Glenair Code MT, ZM



Stainless Steel

Cost	$ $ $ $ $
Conductivity	+ + +
Corrosion Resistance	

-65 to +200°C

Glenair Code Z1, ZL

IMPROVED MATERIAL SELECTION AND PERFORMANCE

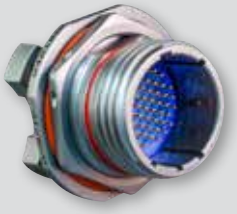

500 Hour Nickel-Teflon (Ni-PTFE) Plating Option



High-Performance Space-Grade Epoxy Potting Compound



High-Performance EMI Ground Spring Attachment

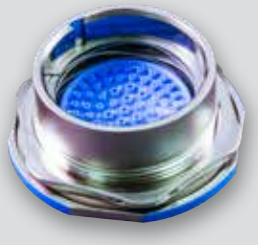

Space-Grade Certified Materials

MIL-DTL-38999 TYPE SPECIAL CLASS DERIVATIVES

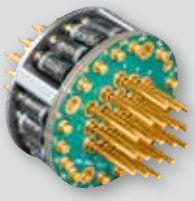

EMI/EMP Filter and TVS





RJ45 and USB Solutions



Fiber Optic



Hermetic

Connector Class	D38999 Sr. III	SuperNine®
Environmental	Yes	Yes
IP68 Mated Condition	No	Yes
Space-Grade	Yes	Yes
Hermetic	Yes	Yes
Lightweight Hermetic	No	Yes
EMI Filter	No	Yes
High Durability	No	Yes
ESD	No	Yes
Bulkhead Feed-Thru	No	Yes
Sav-con® Connector Saver	No	Yes

© 2022 Glenair, Inc • 1211 Air Way, Glendale, CA 91201 • 818-247-6000 • www.glenair.com • U.S. CAGE code 06324 • SuperNine® Catalog
Dimensions in Inches (millimeters) are subject to change without notice.

ADVANCED PERFORMANCE

SuperNine®

MIL-DTL-38999 Series III Type

Contact selection guide

	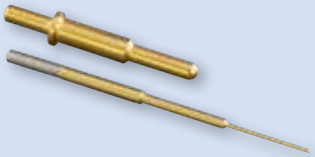		
Extended- Durability Crimp	Printed Circuit Board	#20 Signal	High Density #23 Signal
	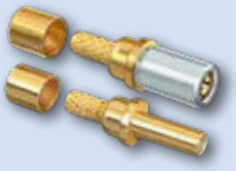		
Solder Cup	#12 50 Ohm Matched Impedance Coaxial	#16 and #12 Coaxial	Concentric Twinax
			
#8 100 Ohm Quadrax	#8 100 Ohm El Ochito®	#8 100 Ohm Differential Twinax	#8 Power
			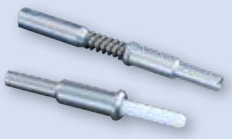
#8 Optoelectronic	Thermocouple	Pneumatic	Size #16 Fiber Optic

Glenair has developed an extensive range of innovative contacts for the SuperNine® connector series, including solutions for fiber optic and pneumatic applications. The development of our own range of high-performance contacts was a key step in gearing our many innovative connector solutions to meet any interconnection challenge. This page highlights a selection of these high-performance contacts, from special high-durability 1500 mating cycle crimp signal contacts to our own high-speed/high-frequency shielded Quadrax and differential Twinax contacts, miniaturized #16 fiber optic contacts and highly specialized gas and pneumatic contact solutions. All our contacts are supported with appropriate extraction and crimp tools—and Glenair can also supply appropriate wire and cable, particularly for short run prototype and production orders. As always, these Glenair technologies are available with no dollar or quantity minimums, and most are in-stock and ready for immediate, same-day shipment.

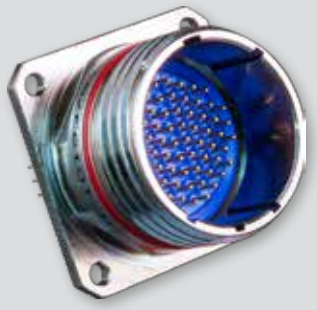

Glenair MIL-DTL-38999 type SuperNine® connectors are supplied with extended-durability pin and socket contacts

© 2022 Glenair, Inc • 1211 Air Way, Glendale, CA 91201 • 818-247-6000 • www.glenair.com • U.S. CAGE code 06324 • SuperNine® Catalog
Dimensions in Inches (millimeters) are subject to change without notice.

MIL-DTL-38999 Series III Type
Wire and cable selection guide

Consult factory for order information, or see Glenair's High Performance Wire and Cable Catalog.

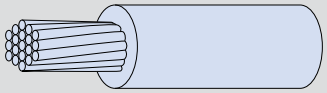

M22759/11 Silver Coated Copper Wire with Extruded PTFE Insulation

For high temperature applications such as aircraft engines and where increased abrasion resistance is required



M22759/16 Tin Coated Copper Wire with Extruded ETFE Insulation

For high temperature applications such as aircraft engines and where increased abrasion resistance and solderability is required

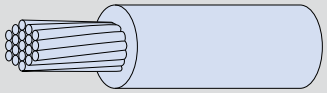

M22759/18 Tin Coated Copper Wire with Thin-Wall Extruded ETFE Insulation

For aerospace applications where light weight, abrasion resistance, mechanical durability and solderability are required

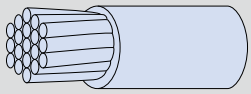

M22759/32 Tin Coated Copper Wire with Crosslinked, Modified ETFE Insulation

For high temperature, light weight aerospace applications where mechanical strength, abrasion resistance and solderability are required

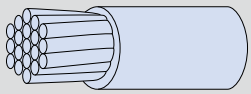

M22759/33 Silver Coated Copper Wire with Crosslinked, Modified ETFE Insulation

For high temperature, light weight aerospace applications where increased mechanical strength and abrasion resistance is required

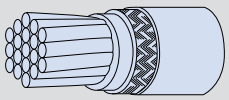

M22759/34 Tin Coated Copper Wire with Overall Braid and Extruded ETFE Insulation

For high temperature airframe and avionics applications where abrasion resistance, mechanical durability, and EMI/RFI shielding are required

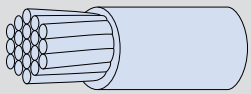

M22759/44 Silver Coated Copper Wire with Crosslinked, Extruded ETFE Insulation

For protected harness applications where high temperature resistance, mechanical durability and flexibility are required

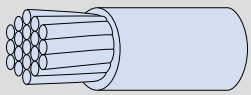

M22759/45 Nickel Coated Copper Wire with Crosslinked, Extruded ETFE Insulation

For protected harness applications where high temperature resistance, mechanical durability, corrosion resistance and flexibility are required

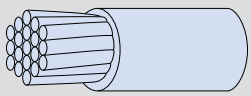

M22759/46 Nickel Coated High Strength Copper Wire with Crosslinked, Extruded ETFE Insulation

For high temperature applications where mechanical durability and, corrosion resistance are primary requirements

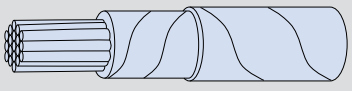

M22759/90 Nickel Coated High Strength Copper Wire with Double Layer Tape Wrap Insulation

For high temperature applications where mechanical durability, corrosion resistance and cable strength are primary requirements

© 2022 Glenair, Inc • 1211 Air Way, Glendale, CA 91201 • 818-247-6000 • www.glenair.com • U.S. CAGE code 06324 • SuperNine® Catalog
Dimensions in Inches (millimeters) are subject to change without notice.

MIL-DTL-38999 Series III Type

MIL-STD-1560 and other standard contact arrangements

REFERENCE MATERIAL

All views are pin face

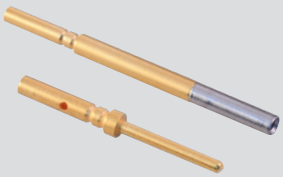
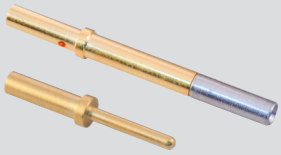

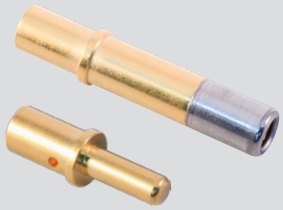

Size #22	Size #20	Size #16	Size #12
857-151-22 Pin	857-151-20 Pin	857-151-16 Pin	857-151-12 Pin
857-150-22 Socket	857-150-20 Socket	857-150-16 Socket	857-150-12 Socket

Environmental and Hermetic Contact Arrangements

Contact	Number of Contacts				Insert Arrangement
	#22D	#20	#16	#12	
Size #22D 5 Amp Max. Current #22-#28 AWG	6				9-35
	13				11-35
	22				13-35
	37				15-35
	55				17-35
	66				19-35
	67				19-45
	79				21-35
	100				23-35
	128				25-35
Size #20 7.5 Amp Max. Current #20-#24 AWG		2			9L-94*
		3			9-98
		4			11-4
		5			11-5
		6			11-98
		7			11-99
		8			13-8
		10			13-98
		18			15-18
		19			15-19
		26			17-26
		32			19-32
		24			21-24
		25			21-25
		27			21-27
		41			21-41
		32			23-32
		34			23-34
		36			23-36
		53			23-53
		55			23-55
		61			25-61

Environmental and Hermetic Contact Arrangements

Contact	Number of Contacts				Insert Arrangement
	#22D	#20	#16	#12	
Size #16 Contacts 13 Amp Max. Current #16-#20 AWG			2		11-2
			4		13-4
			5		15-5
			8		17-8
			11		19-11
			16		21-16
			21		23-21
			16		23-97
			11		23-99
			29		25-29
			37		25-37
Size #12 Contacts 23 Amp Max. Current #12-14 AWG				6	17-6
				11	21-11
				19	25-19

*9L-94 non MIL-STD-1560 in

See Appendix for PCB Footprints

© 2022 Glenair, Inc • 1211 Air Way, Glendale, CA 91201 • 818-247-6000 • www.glenair.com • U.S. CAGE code 06324 • SuperNine® Catalog
Dimensions in Inches (millimeters) are subject to change without notice.

MIL-DTL-38999 Series III Type

MIL-STD-1560 and other standard contact arrangements

All views are pin face

Contact Legend
#22D • #16 ⊕
#20 ⊖ #12 ◒

Insert Arrangement	9-35	9L-94	9-98	11-2	11-4	11-5	11-35
No. of Contacts	6	2	3	2	4	5	13
Contact Size	#22D	#20	#20	#16	#20	#20	#22D
Service Rating	M	M	I	I	I	I	M

Contact Legend
#22D • #16 ⊕
#20 ⊖ #12 ◒

Insert Arrangement	11-98	11-99	13-4	13-8	13-98	13-35
No. of Contacts	6	7	4	8	10	22
Contact Size	#20	#20	#16	#20	#20	#22D
Service Rating	I	I	I	I	I	M

Contact Legend
#22D • #16 ⊕
#20 ⊖ #12 ◒

Insert Arrangement	15-5	15-18	15-19	15-35	17-6
No. of Contacts	5	18	19	37	6
Contact Size	#16	#20	#20	#22D	#12
Service Rating	II	I	I	M	I

Contact Legend
#22D • #16 ⊕
#20 ⊖ #12 ◒

Insert Arrangement	17-8	17-26	17-35	19-11
No. of Contacts	8	26	55	11
Contact Size	#16	#20	#22D	#16
Service Rating	II	I	M	II

Contact Legend
#22D • #16 ⊕
#20 ⊖ #12 ◒

Insert Arrangement	19-32	19-35	19-45	21-11
No. of Contacts	32	66	67	11
Contact Size	#20	#22D	#22D	#12
Service Rating	I	M	M	I

© 2022 Glenair, Inc • 1211 Air Way, Glendale, CA 91201 • 818-247-6000 • www.glenair.com • U.S. CAGE code 06324 • SuperNine® Catalog
Dimensions in Inches (millimeters) are subject to change without notice.

MIL-DTL-38999 Series III Type

MIL-STD-1560 and other standard contact arrangements

REFERENCE MATERIAL

All views are pin face

Contact Legend
#22D • #16 ⊕
#20 ⊖ #12 ◒

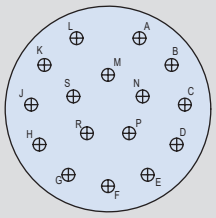

Insert Arrangement	21-16	21-24	21-25	21-27
No. of Contacts	16	24	25	27
Contact Size	#16	#20	#20	#20
Service Rating	II	I	I	I

Contact Legend
#22D • #16 ⊕
#20 ⊖ #12 ◒

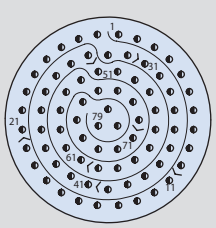

Insert Arrangement	21-35	21-41	23-21	23-32
No. of Contacts	79	41	21	32
Contact Size	#22D	#20	#16	#20
Service Rating	M	I	II	I

Contact Legend
#22D • #16 ⊕
#20 ⊖ #12 ◒

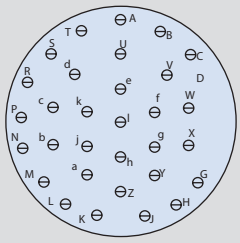

Insert Arrangement	23-34	23-35	23-36	23-53
No. of Contacts	34	100	36	53
Contact Size	#20	#22D	#20	#20
Service Rating	I	M	I	I

Contact Legend
#22D • #16 ⊕
#20 ⊖ #12 ◒

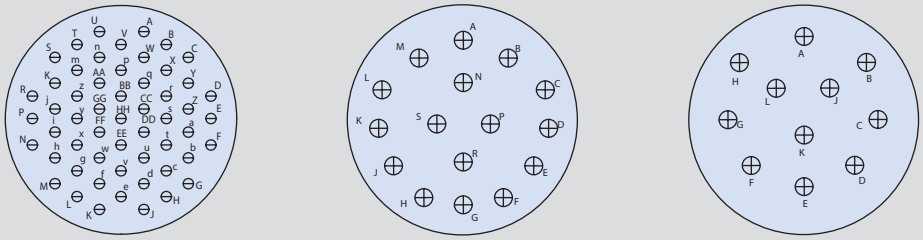

Insert Arrangement	23-55	23-97	23-99
No. of Contacts	55	16	11
Contact Size	#20	#16	#16
Service Rating	I	I	II

© 2022 Glenair, Inc • 1211 Air Way, Glendale, CA 91201 • 818-247-6000 • www.glenair.com • U.S. CAGE code 06324 • SuperNine® Catalog
Dimensions in Inches (millimeters) are subject to change without notice.

MIL-DTL-38999 Series III Type

MIL-STD-1560 and other standard contact arrangements

All views are pin face

Contact Legend
#22D ● #16 ⊕
#20 ⊖ #12 ◒

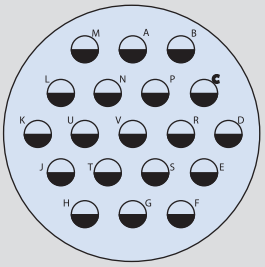

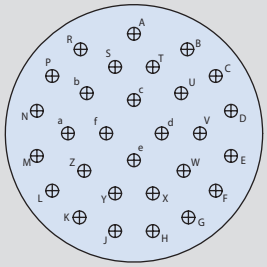

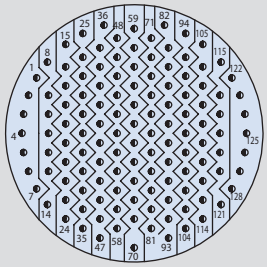

Insert Arrangement	25-19	25-29	25-35
No. of Contacts	19	29	128
Contact Size	#12	#16	#22D
Service Rating	I	I	M

Contact Legend
#22D ● #16 ⊕
#20 ⊖ #12 ◒

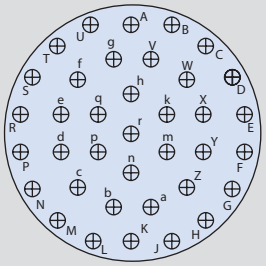

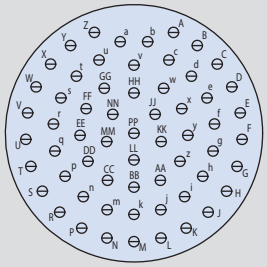

Insert Arrangement	25-37	25-61
No. of Contacts	37	61
Contact Size	#16	#20
Service Rating	II	I

	Test Voltage AC RMS 60Hz IAW MIL-DTL-38999							
	Sea Level		50,000 Ft.		70,000 Ft.		100,000 Ft	
Service Rating	unmated	mated	unmated	mated	unmated	mated	unmated	mated
M	1300	1300	550	800	350	800	200	800
N	1000	1000	400	600	260	600	200	600
I	1800	1800	600	1000	400	1000	200	1000
II	2300	2300	800	1000	500	1000	200	1000

Note: The provision of electrical safety factors in each particular application, including peak voltages, switching currents, transients, etc. is the responsibility of the electrical engineer.

REFERENCE MATERIAL

© 2022 Glenair, Inc • 1211 Air Way, Glendale, CA 91201 • 818-247-6000 • www.glenair.com • U.S. CAGE code 06324 • SuperNine® Catalog
Dimensions in Inches (millimeters) are subject to change without notice.

MIL-DTL-38999 Series III Type
MIL-STD-1560 high-density contact arrangements

REFERENCE MATERIAL

All views are pin face

Environmental and Hermetic Contact Arrangements		
Contact	Number of Size 23 Contacts	Inserrt Arrangement
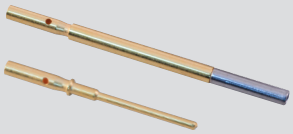 857-189 Pin and 857-190 Socket Size #23 High-Density (HD) 5 Amp Max. Current #22-#26 AWG	9	9-23
	19	11-23
	32	13-23
	55	15-23
	73	17-23
	88	19-23
	121	21-23
	151	23-23
	187	25-23



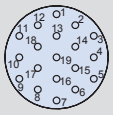

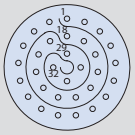

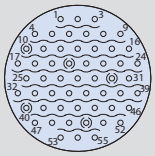

Insert Arrangement	9-23	11-23	13-23	15-23
No. of Contacts	9	19	32	55
Contact Size	#23	#23	#23	#23
Service Rating	N	N	N	N

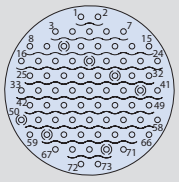

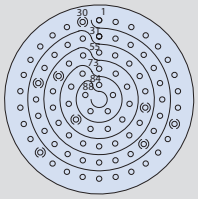

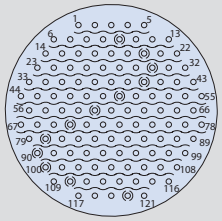

Insert Arrangement	17-23	19-23	21-23
No. of Contacts	73	88	121
Contact Size	#23	#23	#23
Service Rating	N	N	N

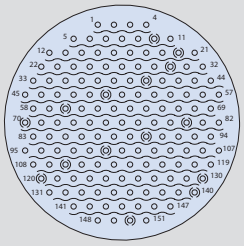

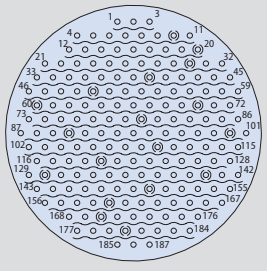

Insert Arrangement	23-23	25-23
No. of Contacts	151	187
Contact Size	#23	#23
Service Rating	N	N

© 2022 Glenair, Inc • 1211 Air Way, Glendale, CA 91201 • 818-247-6000 • www.glenair.com • U.S. CAGE code 06324 • SuperNine® Catalog
Dimensions in Inches (millimeters) are subject to change without notice.

MIL-DTL-38999 Series III Type
MIL-STD-1560 combo contact arrangements

All views are pin face

Contact Legend
#22D • #20 ⊖ #16 ⊕
#12 ◒ #10 ◉

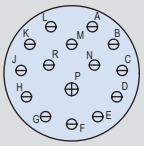

Insert Arrangement	15-15	
No. of Contacts and Size	1X #16	14X #20
Service Rating	I	

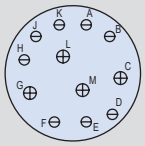

Insert Arrangement	15-97	
No. of Contacts and Size	4X #16	8X #20
Service Rating	I	

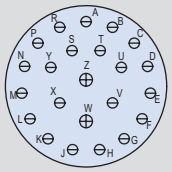

Insert Arrangement	17-99	
No. of Contacts and Size	2X #16	21X #20
Service Rating	I	

Contact Legend
#22D • #20 ⊖ #16 ⊕
#12 ◒ #10 ◉

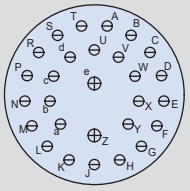

Insert Arrangement	19-28	
No. of Contacts and Size	2X #16	26X #20
Service Rating	I	

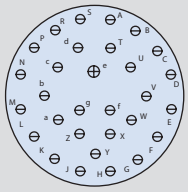

Insert Arrangement	19-30	
No. of Contacts and Size	1X #16	29X #20
Service Rating	I	

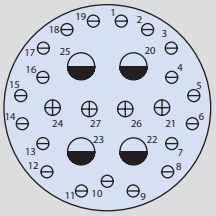

Insert Arrangement	21-29		
No. of Contacts and Size	4x #12	4X #16	19X #20
Service Rating	I		

Contact Legend
#22D • #20 ⊖ #16 ⊕
#12 ◒ #10 ◉

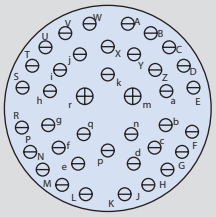

Insert Arrangement	21-39	
No. of Contacts and Size	2X #16	37X #20
Service Rating	I	

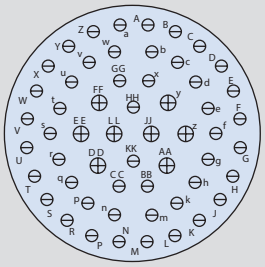

Insert Arrangement	25-4	
No. of Contacts and Size	8X #16	48X #20
Service Rating	I	

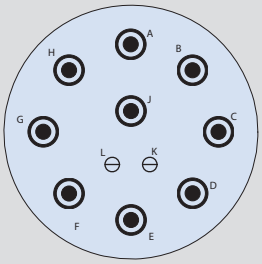

Insert Arrangement	25-11	
No. of Contacts and Size	9X #10	2x #20
Service Rating	N	

Contact Legend
#22D • #20 ⊖ #16 ⊕
#12 ◒ #10 ◉

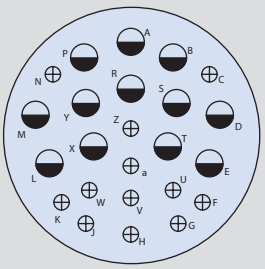

Insert Arrangement	25-24	
No. of Contacts and Size	12X #12	12X #16
Service Rating	I	

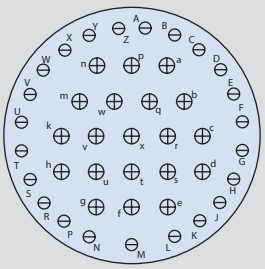

Insert Arrangement	25-43	
No. of Contacts and Size	20X #16	23X #20
Service Rating	I	

© 2022 Glenair, Inc • 1211 Air Way, Glendale, CA 91201 • 818-247-6000 • www.glenair.com • U.S. CAGE code 06324 • SuperNine® Catalog
Dimensions in Inches (millimeters) are subject to change without notice.

MIL-DTL-38999 Series III Type

Recommended panel cut-out dimensions

REFERENCE MATERIAL

RECOMMENDED PANEL CUT-OUT

Recommended Panel Cut-Out

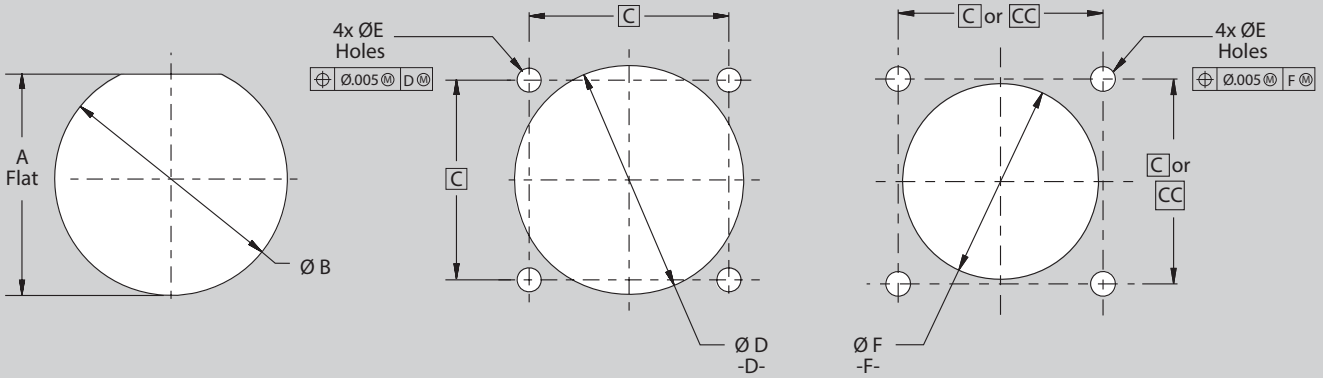

Jam Nut Mount

Wall Mount
Rear Panel Mount

Wall Mount
Front Panel Mount

Panel Cut-Out Dimensions								
		Jam Nut Mount		Wall Mount				
Shell Size Code	Shell Size	A Flat	B Dia	C BSC	CC BSC	D Dia Min	E Dia Flange Holes	F Dia Min
A	9	.661 (16.79) .654 (16.61)	.703 (17.58) .693 (17.60)	.719 (18.26)	.594 (15.09)	.656 (16.66)	.133 (3.38) .123 (3.12)	.516 (13.12)
B	11	.771 (19.58) .761 (19.33)	.835 (21.21) .825 (20.96)	.812 (20.62)	.719 (18.26)	.796 (20.22)		.625 (15.88)
C	13	.955 (24.26) .945 (24.00)	1.020 (25.91) 1.010 (25.65)	.906 (23.01)	.812 (20.62)	.922 (23.42)		.750 (19.05)
D	15	1.085 (27.56) 1.075 (27.31)	1.145 (29.08) 1.135 (28.83)	.969 (24.61)	.906 (23.01)	1.047 (26.59)		.906 (23.01)
E	17	1.210 (30.73) 1.200 (30.48)	1.270 (32.26) 1.260 (32.00)	1.062 (26.97)	.969 (24.61)	1.219 (30.96)		1.016 (25.81)
F	19	1.335 (33.91) 1.325 (33.66)	1.395 (35.43) 1.385 (35.18)	1.156 (29.36)	1.062 (26.97)	1.297 (32.94)		1.141 (28.98)
G	21	1.460 (37.08) 1.450 (36.83)	1.520 (38.61) 1.510 (38.35)	1.250 (31.75)	1.156 (29.36)	1.422 (36.12)		1.266 (32.16)
H	23	1.585 (40.26) 1.575 (40.01)	1.645 (41.78) 1.635 (41.53)	1.375 (34.93)	1.250 (31.75)	1.547 (39.29)	.159 (4.04) .149 (3.78)	1.375 (34.93)
J	25	1.710 (43.43) 1.700 (43.18)	1.770 (44.96) 1.760 (44.70)	1.500 (38.10)	1.375 (34.92)	1.672 (42.47)	.155 (3.94) .145 (3.68)	1.484 (37.69)

RECOMMENDED PANEL THICKNESS FOR 233-205, 233-206, AND 233-207 THRU 233-211

For All Jam-Nuts:
Shell Size 9 Thru 25: .126/.062 (3.20/ 1.57)

Square Flange (233-205 and 233-206):
Shell Size 9 Thru 19: .228 (5.79)
Shell Size 21 Thru 25: .197 (5.00)

Square Flange 233-207 To 233-211
Front Panel Mount Shell Size 9 Thru 19: .228 (5.80)
Front Panel Mount Shell Size 21 Thru 25: .197 (5.00)
Rear Panel Mount Shell Size 9 Thru 19: .338 (8.59)
Rear Panel Mount Shell Size 21 Thru 25: .307 (7.80)

© 2022 Glenair, Inc • 1211 Air Way, Glendale, CA 91201 • 818-247-6000 • www.glenair.com • U.S. CAGE code 06324 • SuperNine® Catalog
Dimensions in Inches (millimeters) are subject to change without notice.

MIL-DTL-38999 Series III Type

Alternate key polarization

ALTERNATE POLARIZATIONS IAW MIL-DTL-38999 SERIES III

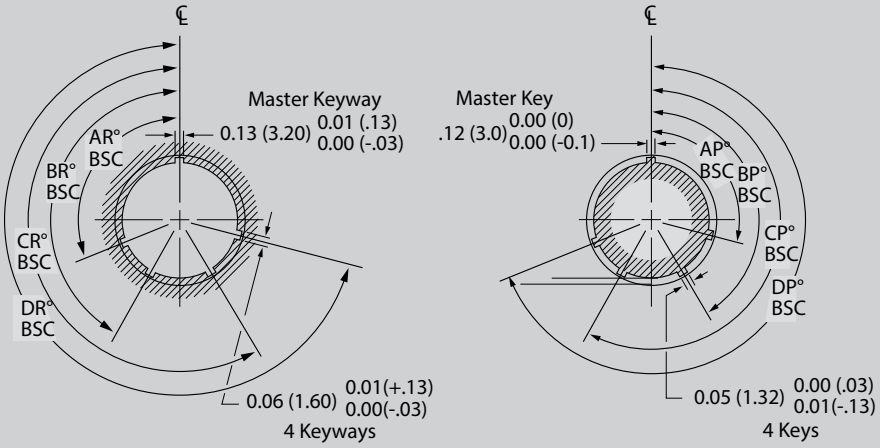

Alternate Keyway, Receptacles | **Alternate Key, Plugs**

Series III Alternate Key and Keyway Polarization					
Shell Size	**Key and Keyway Code**	**AR° or AP° BSC**	**BR° or BP° BSC**	**CR° or CP° BSC**	**DR° or DP° BSC**
9	N	105	140	215	265
	A	102	132	248	320
	B	80	118	230	312
	C	35	140	205	275
	D	64	155	234	304
	E	91	131	197	240
11 13 15	N	95	141	208	236
	A	113	156	182	292
	B	90	145	195	252
	C	53	156	220	255
	D	119	146	176	298
	E	51	141	184	242
17 19 21 23 25	N	80	142	196	293
	A	135	170	200	310
	B	49	169	200	244
	C	66	140	200	257
	D	62	145	180	280
	E	79	153	197	272

Glenair's Universal Key is intermateable with all MIL-DTL-38999 Series III polarizations.

© 2022 Glenair, Inc • 1211 Air Way, Glendale, CA 91201 • 818-247-6000 • www.glenair.com • U.S. CAGE code 06324 • SuperNine® Catalog
Dimensions in Inches (millimeters) are subject to change without notice.

Glenair®

MISSION-DRIVEN DESIGN

SERIES 23 SUPERNINE®

Environmental Series MIL-DTL-38999 Series III

Environmental crimp contact, PC tail receptacles, connector savers, space-grade solutions, and more



Advanced-performance D38999 series III environmental connectors for mission-critical applications—from ground vehicles to satellites and everything in-between.

SuperNine®

ADVANCED PERFORMANCE

SuperNine® Environmental Series

MIL-DTL-38999 Series III Type High Durability Connectors

Product selection guide

ENVIRONMENTAL CONNECTORS

SuperNine®

Features B-3
Material/finish and Panel Cut-out Dimensions B-4
Performance Summary and Specifications B-5



233-205 B-8
Crimp Contact Plug and Receptacle Connectors
Jam nut, square flange, and in-line with accessory threads



233-206 B-12
Crimp Contact Plug and Receptacle Connectors
Jam nut, square flange, and in-line with boot groove and banding porch



233-221 B-16
COBRA Crimp Contact Wire Harness Connector
Right angle 'Cobra' connector with integral banding porch



233-215 B-18
1K PSI Piston Sealed, Crimp Contact Connectors
Boot groove, banding platform or accessory thread options

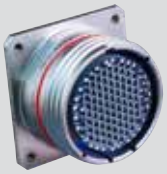

233PS215 B-22
Panel-Sealed Wall Mount Receptacle
Dual O-ring panel sealed connector (for use with 233-215 plug)



233-274 B-24
1K PSI crimp-contact piston-sealed connectors
Meets fuel resistant MIL-F-8615 testing and explosion proof test MIL-STD-810, Method 511.7



253-393
64 MB, 128 MB, and 256 MB USB Memory Stick
USB 2.0 memory stick B-29



233-216 B-30
Lanyard-Release Connectors
Quick-release lanyard plug with EMI ground spring

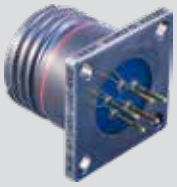

233-207
Flush Flange PCB Receptacles
Wall mount, slotted holes B-32
Wall mount, helicoils B-33
Jam-nut mount B-34



233-208
Stepped-Contact PCB Receptacles
Wall mount B-36
Jam-nut mount B-38



233-209
Sealed 1 x 10^{-4} PCB Receptacle with Washout Standoffs
Wall mount B-40
Jam-nut B-42



233-210
Threaded-Standoff PCB Receptacles
Wall mount B-44
Jam-nut B-46



233-211
Dual-Flange Threaded-Standoff PCB Receptacles
Wall mount B-48
Jam-nut B-50

Sav-Con® B-52
Connector Savers
MIL-STD-1560 supported arrangements B-54



233-213 Connector Saver, In-line B-55
Pin/pin and socket/socket contact options available.

© 2022 Glenair, Inc • 1211 Air Way, Glendale, CA 91201 • 818-247-6000 • www.glenair.com • U.S. CAGE code 06324 • SuperNine® Catalog

Dimensions in Inches (millimeters) are subject to change without notice.

SuperNine® Environmental Series

MIL-DTL-38999 Series III Type

Product selection guide

ENVIRONMENTAL CONNECTORS

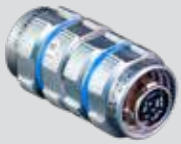

233-214 B-56
In-line Connector Saver
Plug-to-plug ndependent alternate polarizations. Pin/pin and socket/ socket contact options available.



233-212 and 233-212-07
Bulkhead Feed-thru
Wall mount B-57
Jam-nut mount B-59

SuperNine® Pulse Width Modulation (PWM)
Clean Sky Power Connector Features B-61
Performance Specifications B-62
Contacts B-65
Crimp Tools B-66
TurboFlex® Aerospace-Grade Power Cable B-67



233-230-G6
PWM High-Voltage Connectors
In-line Plug B-63



233-230-00
PWM High-Voltage Connectors
Square Flange, Receptacle B-64

Space-Grade Blind-Mate Connectors
Outgassing and Screening Guidelines B-69
Blind-Mate Features B-71

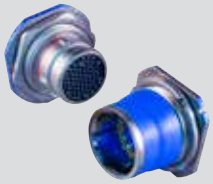

253-014 Blind-Mate Plug B-73
Fixed mount jam-nut with roll-off nose and accessory threads
253-015 Blind-Mate Rcpt B-74
Jam-nut mount; misalignment accommodation and optional sealing



253-016 Blind-Mate Plug B-75
Fixed-mount plug, spring assist
253-017 Blind-Mate Rcpt B-76
Float mount receptacle with adjustable separation force



253-018 B-77
Blind-Mate Bulkhead Feed Thru
Jam-nut, blind-mate plug (A side) and 38999-type receptacle or plug mating interface (B side), with kick-off spring



253-019 B-79
Blind-Mate Receptacle
Floating jam-nut mount with misalignment accommodation and optional sealing.



253-031 B-81
Blind-Mate Plug, with Assisted Separation Waveform Springs
Fixed jam-nut mount with kick-off spring and accessory threads.



253-032 B-83
Blind-Mate Receptacle
Floating jam-nut mount with misalignment accommodation and optional sealing. Mates with 253-031

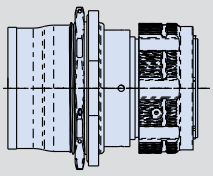

253-033 B-85
Blind-Mate Bulkhead Feed-Thru
Floating jam-nut mount receptacle (side A) and 38999 type plug mating interface (side B) with misalignment accommodation



253-025 B-87
Locking Circuit and Test Mate Receptacle Connector
Mates with 253-016 plug

© 2022 Glenair, Inc • 1211 Air Way, Glendale, CA 91201 • 818-247-6000 • www.glenair.com • U.S. CAGE code 06324 • SuperNine® Catalog
Dimensions in Inches (millimeters) are subject to change without notice.



ENVIRONMENTAL SERIES

SuperNine®

The environmental class of the Glenair Series 23 SuperNine® includes IP68 (mated condition) MIL-DTL-38999, Series III crimp plugs and receptacles for cable and I/O applications, plus the interconnect industry's most advanced range of PCB termination receptacles, connector savers, and bulkhead feed-thrus. High performance options include extended durability contacts, integrated banding capability, high-density insert arrangements, and more. Rugged ratcheted coupling technology delivers reliable vibration and shock performance IAW the most stringent industry specifications. Insert arrangements are in accordance with MIL-STD-1560 and include special high-density arrangements.

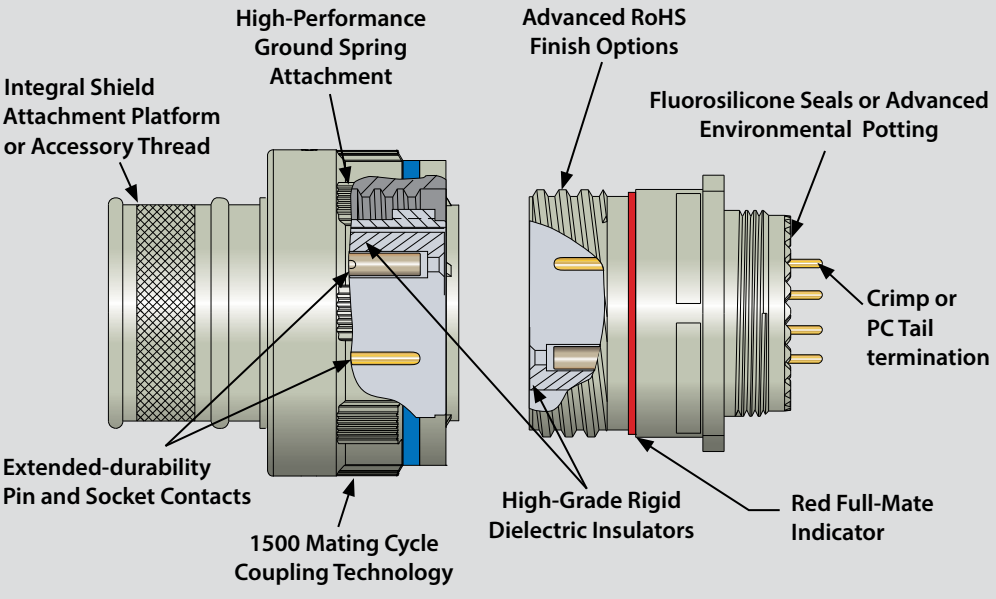

- **Integrated band porch**
- **Extended-durability contacts, finish and coupling nut: 1500 cycles**
- **Standard plus high-density contact arrangements**
- **Integrated EMI/RFI ground spring**
- **Extensive line of PC tail configurations with superior sealing**
- **Advanced RoHS compliant finish solutions**
- **IP68 in mated condition (10 meters, two hours)**
- **Available transition zone piston seal versions**



850-006 and 850-007 Extended-duty socket and pin crimp contacts

© 2022 Glenair, Inc • 1211 Air Way, Glendale, CA 91201 • 818-247-6000 • www.glenair.com • U.S. CAGE code 06324 • SuperNine® Catalog

Dimensions in Inches (millimeters) are subject to change without notice.

SuperNine® Environmental Series

MIL-DTL-38999 Series III Type

Material and finish / panel cut-out dimensions

SUMMARY OF MATERIALS AND SPECIFICATIONS (see performance spec for complete information)

Shell Type and Sizes

- Shell Type – D38999 Series III Type, sizes 9 through 25

Electrical Specifications:

- Operating Voltage Rating (Ground) – 400 to 1000 Volts VAC
- Operating Current Rating – 5 to 46 Amps

Environmental / Mechanical Performance

- Sealing – IP67 or better depending on family
- Flammability Toxicity – FAR25 compliant low smoke, zero halogen
- Leak Rate: connectors with fixed PC tail contacts<1 x 10-4 ccHe/sec in the unmated condition
- Operating Temperature Range – -65°C to +200°C (finish dependant)
- Mechanical Shock and Vibration – 43.9 g's @ 200°C, 3 axis, 300 Hz/300 g's
- Accessory – banding porch or thread
- Durability (Mating Cycles) – up to 1500
- Outgassing - See space information in this section

Material and Finish				
38999 Class Equiv.	Sym	Material	Finish Description	RoHS
F	ME	Aluminum	Electroless nickel	☑
T	MT		Ni-PTFE 500 hour nickel fluorocarbon polymer	☑
W	NF		Cadmium O.D. over electroless nickel	☒
Z	ZR		Black zinc-nickel over electroless nickel	☑
N/A	T0	Titanium	Natural, unplated	☑
N/A	TP3		Electro-deposited nickel	☑
K	Z1	Stainless Steel	Passivate	☑
L	ZL		Electro-deposited nickel	☑
N/A	AB	Marine Bronze	Unplated	☑

Additional material/finish options available, consult factory

PANEL CUT-OUT DIMENSIONS

Jam Nut Mount

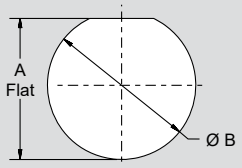

Wall Mount, Rear Panel Mount

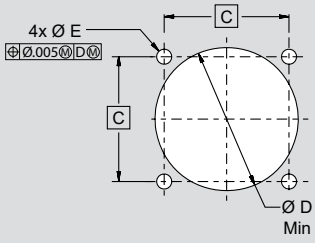

Wall Mount, Front Panel Mount

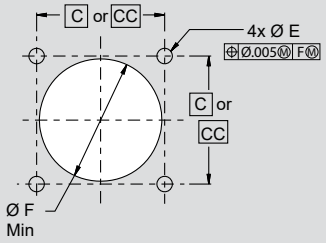

Recommended Panel Cut-Out Dimensions								
Shell Size Code	Shell Size	Jam Nut Mount		Wall Mount				
		A Flat	B Dia	C BSC	CC BSC	D Dia Min	E Dia Flange Holes	F Dia Min
A	9	.661/.654 (16.80/16.60)	.703/.693 (17.85/17.60)	.719 (18.26)	.594 (15.09)	.656 (16.66)	.133/.123 (3.38/3.12)	.516 (13.12)
B	11	.771/.761 (19.58/19.34)	.835/.825 (21.21/20.96)	.812 (20.62)	.719 (18.26)	.796 (20.22)		.625 (15.88)
C	13	.955/.945 (24.26/24.01)	1.020/1.010 (25.90/25.65)	.906 (23.01)	.812 (20.62)	.922 (23.42)		.750 (19.05)
D	15	1.085/1.075 (27.56/27.31)	1.145/1.135 (29.08/28.83)	.969 (24.61)	.906 (23.01)	1.047 (26.59)		.906 (23.01)
E	17	1.210/1.200 (30.73/30.48)	1.270/1.260 (32.26/32.00)	1.062 (26.97)	.969 (24.61)	1.219 (30.96)		1.016 (25.81)
F	19	1.335/1.325 (33.91/33.66)	1.395/1.385 (35.43/35.18)	1.156 (29.36)	1.062 (26.97)	1.297 (32.94)		1.141 (28.98)
G	21	1.460/1.450 (37.08/36.83)	1.520/1.510 (38.60/38.35)	1.250 (31.75)	1.156 (29.36)	1.422 (36.12)		1.266 (32.16)
H	23	1.585/1.575 (40.26/40.01)	1.645/1.635 (41.78/41.53)	1.375 (34.93)	1.250 (31.75)	1.547 (39.29)	.159/.149 (4.04/3.78)	1.375 (34.93)
J	25	1.710/1.700 (43.43/43.18)	1.770/1.760 (44.99/44.74)	1.500 (38.10)	1.375 (34.92)	1.672 (42.47)	.155/.145 (3.94/3.68)	1.484 (37.69)

© 2022 Glenair, Inc • 1211 Air Way, Glendale, CA 91201 • 818-247-6000 • www.glenair.com • U.S. CAGE code 06324 • SuperNine® Catalog
Dimensions in Inches (millimeters) are subject to change without notice.

SuperNine® Environmental Series

MIL-DTL-38999 Series III Type

Performance specification summary

GENERAL SUMMARY OF SUPERNINE® PERFORMANCE

SuperNine® is a high-performance connector family designed for cable-to-panel, I/O and inline, applications in military aerospace and other demanding situations. Environmental class versions—with high-density insert arrangements (up to 187 contacts)—are available with crimp removable contacts, PC tails, and solid contact feed-thrus and connector savers. Glenair SuperNine® is a broad product family of MIL-DTL-38999 Series III type connectors including Class G space-grade designs, lanyard-release connectors and specialty metal cable plugs and receptacles, as well as metal-insert (ground plane) configurations for shielded contact equipped products. This table describes the most basic attributes for environmental class products supplied by Glenair.

Series Description	Scoop-Proof, Triple Start, Self-Locking
Supported Contact Types and Gauges	8, 12, 16, 20, and 22D gauge contacts, standard density and 23 gauge high density arrangements; 1 to 187 contacts. Crimp, solder and PCB tails
Coupling/Mating Design	Triple-start threaded coupling design, rapid advance, self-locking and full-mate indicator, keyed
EMI Shielding	Shell to shell bottoming, grounding fingers, conductive finish and thick shell wall cross-sections provide effective EMI shielding to 65 dB minimum up to 10 GHz
Vibration and Shock	Excellent resistance to vibration and shock with no electrical discontinuity and no disengagement of the mated connectors per MIL-DTL-38999 (paragraph 3.27 & 3.28); Qualification to Bell 299-100-829 vibration and mating durability (Glenair Test Report GT-18-106)
Mating Speed	360 ° or one full turn to full mate
Materials	Aluminum, CRES and Titanium Shells, Fluorosilicone/Silicone Blend Seals, Beryllium Copper Alloy, Gold Plated Contacts
Durability	500 to 1500 mating cycles, see individual data sheets for appropriate value
IP Rating	Receptacles with non-removable PC tail contacts IP67; Removable contacts in mated condition, IP68
Outgassing	See space-grade guide in this section

Performance Specifications, IAW MIL-DTL-38999 Series III REV. L

Test | **Test Requirement**

Dielectric Withstanding Voltage

	Service Rating M		Service Rating N		Service Rating I		Service Rating II	
Altitude	Mated	Unmated	Mated	Unmated	Mated	Unmated	Mated	Unmated
Sea level	1300	1300	1000	1000	1800	1800	2300	2300
50,000 feet	800	550	600	400	1000	600	1000	800
70,000 feet	800	350	600	260	1000	400	1000	500
100,000 feet	800	200	600	200	1000	200	1000	200

Note: The establishment of electrical safety factors is left entirely to the designer, as they are in the position to know exactly what peak voltages, switching currents, transients, etc. can be expected in a particular circuit.

Insulation Resistance

Unmated connectors shall be tested as specified in test method EIA-364-21
5000 megohms min. at 25° C

© 2022 Glenair, Inc • 1211 Air Way, Glendale, CA 91201 • 818-247-6000 • www.glenair.com • U.S. CAGE code 06324 • SuperNine® Catalog
Dimensions in Inches (millimeters) are subject to change without notice.

SuperNine® Environmental Series

MIL-DTL-38999 Series III Type

Performance specifications

Performance Specifications, IAW MIL-DTL-38999 Series III REV. L

Test	Test Requirement

Shielding Effectiveness

Frequency (MHz)	Leakage Attenuation Minimum (dB)	
	Finishes L, F	Finishes T, W, Z
100	90	90
200	88	88
300	88	88
400	87	87
800	85	85
1,000	85	85

Frequency (MHz)	Leakage Attenuation Minimum (dB)	
	Finishes L, F	Finishes T, W, Z
1,500	76	69
2,000	70	65
3,000	69	61
4,000	68	58
6,000	66	55
10,000	65	50

Supported Wire Size

Contact Size	Wire Gauge
23	#22 - #28
22D	#22 - #28
20	#20 - #24

Contact Size	Wire Gauge
16	#16 - #20
12	#12 - #14
8	#8 - #10

Mating / Unmating Forces

Coupling torque for mating and unmating of the counterpart connectors and protective covers

Shell size	Maximum engagement and disengagement		Minimum disengagement	
	Pound inch	Newton meters	Pound inch	Newton meters
9	8	0.9	2	0.2
11	12	1.4	2	0.2
13	16	1.8	2	0.2
15	20	2.3	3	0.3
17	24	2.7	3	0.3
19	28	3.2	3	0.3
21	32	3.6	5	0.6
23	36	4.1	5	0.6
25	40	4.6	5	0.6

Physical Shock	No loosening of parts, cracking or other deleterious results hindering further part operation after 300 G's in each of 3 mutually perpendicular planes.
Fluid Compatibility	Designed to function in all fluids encountered in any modern military or aerospace environment.
High Impact Shock	Mated connectors, wired with MIL-C-915/60 or /63 cable and equipped with straight environmentally sealed backshells, withstand high impact shock per MIL-S-901.
Vibration	No electrical discontinuity and no disengagement of the mated connectors, backing off of the coupling mechanism, evidence of cracking, breaking, or loosening of parts. See Glenair Test Report GT-18-106 for vibration profiles IAW Bell 299-100-829.
Fungus	Materials used in the construction of these connectors shall be fungus inert per certification of method 508.4 of MIL-STD-810.
Corrosion	When tested in accordance with EIA-364-26, meets appropriate electrical and mechanical requirements and shows no exposure of base metal.

© 2022 Glenair, Inc • 1211 Air Way, Glendale, CA 91201 • 818-247-6000 • www.glenair.com • U.S. CAGE code 06324 • SuperNine® Catalog
Dimensions in Inches (millimeters) are subject to change without notice.

Performance Specifications, IAW MIL-DTL-38999 Series III REV. L	
Test	**Test Requirement**
Durability	No electrical or mechanical defects after 1500 cycles of engagement and disengagement with appropriate finish, unless otherwise specified.
Insert Retention	Unmated connectors shall retain their inserts in their proper location in the shell and there shall be no evidence of cracking, breaking, separation from the shell, or loosening of parts. 100 ±5 psi, 25 lb min force.
Crimp Contact Retention	The axial displacement of the contact shall not exceed .012 inch (0.30 mm). No damage to contacts or inserts shall result.
Current Rating	See table below
Finish/Plating	See table below

Contact Size	Maximum Amps Crimp Contact Environmental	Contact Size	Maximum Amps Crimp Contact Environmental
23	5	16	13
22D	5	12	23
20	7.5	8	46

Finish/Plating	Operating Temperature Range	Corrosion Resistance	Shell to Shell Conductivity
Electroless Nickel (ME)	-65°C to +200°C	48 hrs	1.0 mv max.
PTFE/Nickel (MT)	-65°C to +175°C	500 hrs	2.5 mv max.
OD Cadnium (NF)	-65°C to +175°C	500 hrs	2.5 mv max.
Black Zink-Nickel (ZR)	-65°C to +175°C	500 hrs	2.5 mv max.

© 2022 Glenair, Inc • 1211 Air Way, Glendale, CA 91201 • 818-247-6000 • www.glenair.com • U.S. CAGE code 06324 • SuperNine® Catalog
Dimensions in Inches (millimeters) are subject to change without notice.

ADVANCED PERFORMANCE

SuperNine® Environmental Series

MIL-DTL-38999 Series III Type

233-205 crimp-contact connectors with accessory threads

Part Number Development						
Sample Part Number	**233-205**	**-G6**	**MT**	**17-8**	**P**	**N**
Series / Basic Part No.	**233-205 =** SuperNine crimp contact wire harness connectors					
Connector Style*	**G6** = Plug, with EMI Spring **05** = Receptacle, In-Line **07** = Receptacle, Jam Nut **00** = Receptacle, Wall Mount with Slotted Holes **HS** = Receptacle, Wall Mount with Standard Helicoil **HM** = Receptacle, Wall Mount with Metric Helicoil **CS** = Receptacle, Wall Mount with Standard Clinch-Nuts **CM** = Receptacle, Wall Mount with Metric Clinch-Nuts					
Finish	**NF** = Aluminum alloy/Cadmium Olive Drab **ME** = Aluminum alloy/Electroless Nickel **MT** = Aluminum alloy/Nickel PTFE **ZR** = Aluminum alloy/Black Zinc Nickel					
Shell Size-Insert Arrangement*	Per MIL-STD-1560					
Contact Type	**A** = Pin insert, less contacts **P** = Pin, high durability 1500 cycles **H** = Pin, paladium nickel **B** = Socket insert, less contacts **S** = Socket, high durability 1500 cycles **J** = Socket, paladium nickel					
Alternate Polarization*	**A, B, C, D, E, N** = Normal (IAW MIL-DTL-38999 Series III)					

***Refer to Section A for complete details**

G6 - PLUG WITH ACCESSORY THREADS

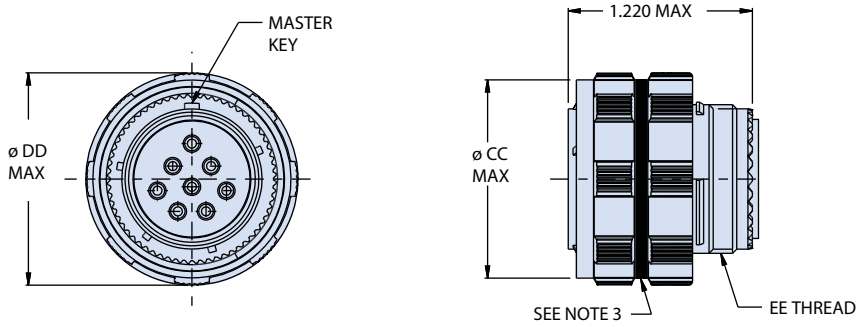

Plug Dimensions				
Shell Size Code	**Shell Size**	**ØCC Max**	**ØDD[7] Max**	**EE Thread**
A	09	.811 (20.60)	.858 (21.79)	M12 X 1.0-6g 0.100R
B	11	.929 (23.60)	.984 (24.99)	M15 X 1.0-6g 0.100R
C	13	1.110 (28.19)	1.157 (29.39)	M18 X 1.0-6g 0.100R
D	15	1.232 (31.29)	1.280 (32.51)	M22 X 1.0-6g 0.100R
E	17	1.358 (34.49)	1.406 (35.71)	M25 X 1.0-6g 0.100R
F	19	1.469 (37.31)	1.516 (38.51)	M28 X 1.0-6g 0.100R
G	21	1.594 (40.49)	1.642 (41.71)	M31 X 1.0-6g 0.100R
H	23	1.720 (43.69)	1.768 (44.91)	M34 X 1.0-6g 0.100R
J	25	1.843 (46.81)	1.890 (48.01)	M37 X 1.0-6g 0.100R

NOTES

1. 233-205 is designed to meet or exceed the mechanical, electrical, environmental and dimensional requirements of D38999/20, /24 & /26. Except as shown and/or noted.
2. Insert arrangements IAW MIL-STD-1560, plus Glenair HD shielded contact specials.
3. Blue color band indicates rear release retention system.
4. Connector is supplied with contacts (including spares), insertion/removal tool and sealing plugs.
5. Dimensions in inches (millimeters) are subject to change without notice.
6. Consult factory for additional information.
7. Front panel mount only
8. Material/finish:
   - Shell, barrel, coupling nut jam nut - see part number development
   - ratchet ring, detent spring: stainless steel/passivated
   - grounding spring: BeCu alloy/ electroless nickel
   - insulator: high grade rigid dielectric/ n.a.
   - Seals, grommet: fluorosilicone blend/ N/A.
   - Contacts: copper alloy/seepart number development

© 2022 Glenair, Inc • 1211 Air Way, Glendale, CA 91201 • 818-247-6000 • www.glenair.com • U.S. CAGE code 06324 • SuperNine® Catalog
Dimensions in Inches (millimeters) are subject to change without notice.

05 - IN-LINE RECEPTACLE WITH ACCESSORY THREADS

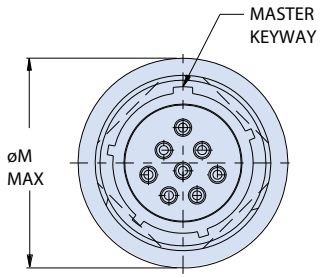

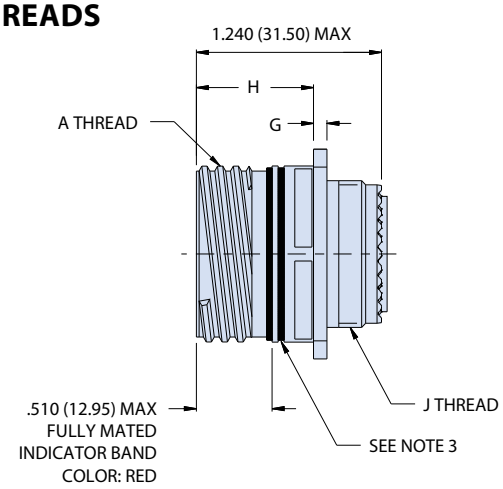

07 - JAM NUT RECEPTACLE WITH ACCESSORY THREADS

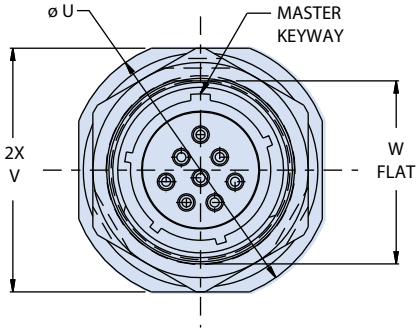

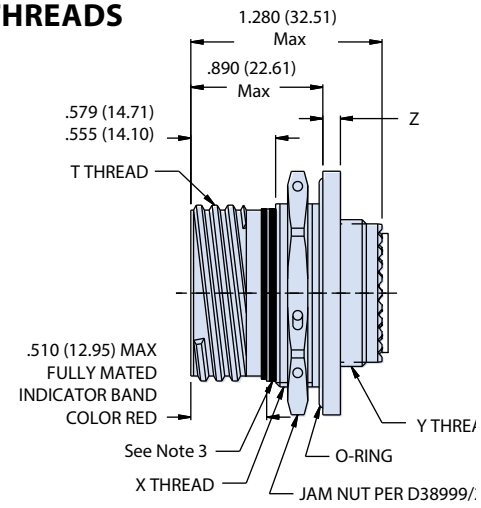

00 - WALL MOUNT RECEPTACLE WITH ACCESSORY THREADS AND SLOTTED HOLES

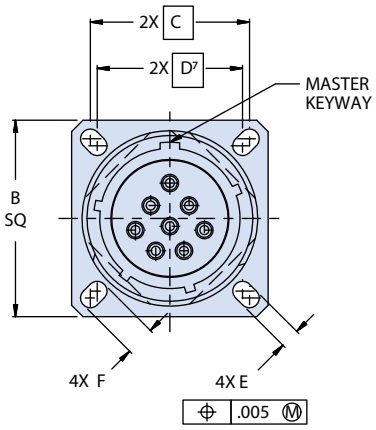

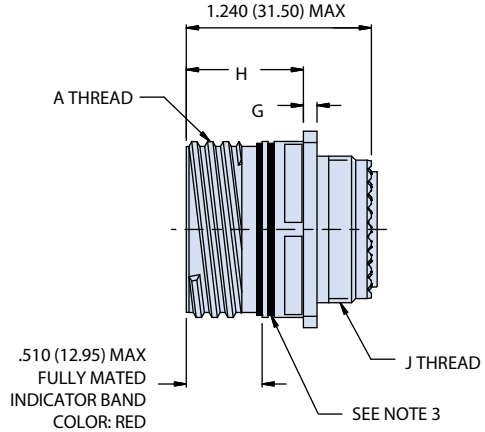

© 2022 Glenair, Inc • 1211 Air Way, Glendale, CA 91201 • 818-247-6000 • www.glenair.com • U.S. CAGE code 06324 • SuperNine® Catalog
Dimensions in Inches (millimeters) are subject to change without notice.

CS AND CM - WALL MOUNT RECEPTACLE WITH METRIC OR STANDARD CLINCH NUTS

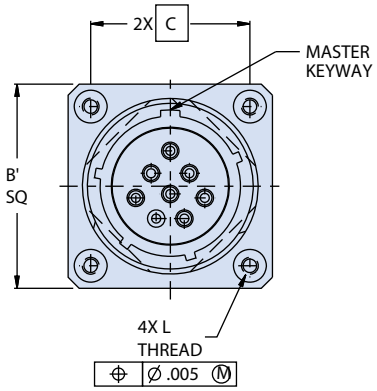

CS- STANDARD CLINCH NUTS

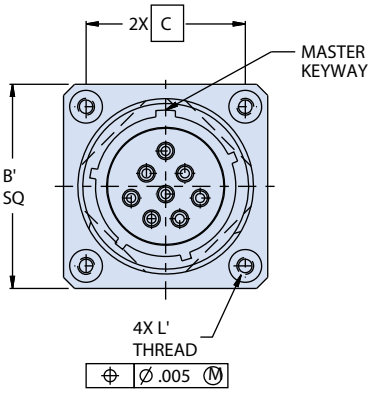

CM - METRIC CLINCH NUTS

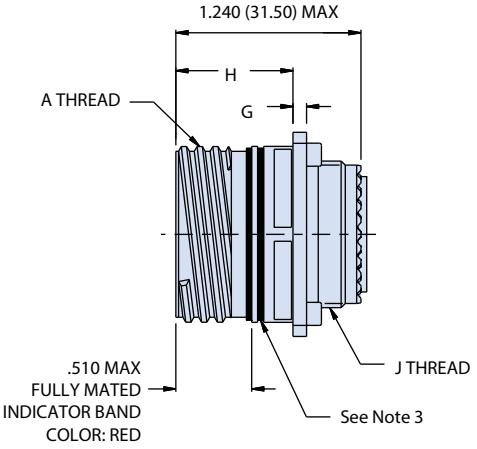

HS AND HM - WALL MOUNT RECEPTACLE WITH METRIC OR STANDARD HELICOILS

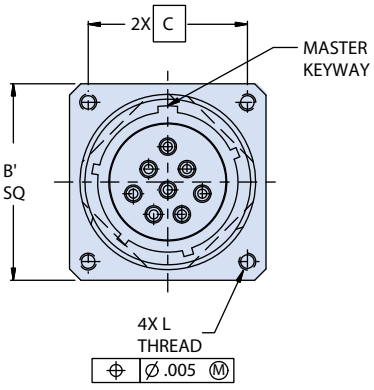

HS- WITH STANDARD HELICOILS

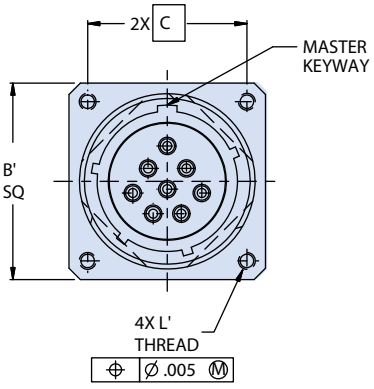

HM - WITH METRIC HELICOILS

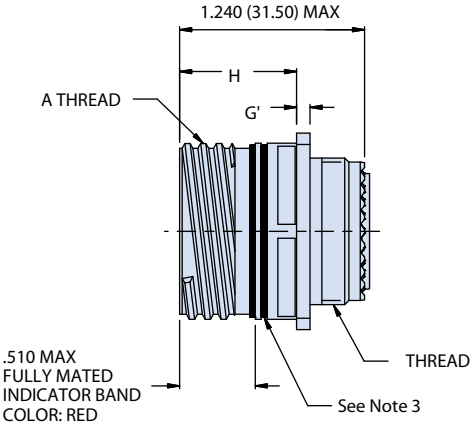

© 2022 Glenair, Inc • 1211 Air Way, Glendale, CA 91201 • 818-247-6000 • www.glenair.com • U.S. CAGE code 06324 • SuperNine® Catalog
Dimensions in Inches (millimeters) are subject to change without notice.

SuperNine® Environmental Series

MIL-DTL-38999 Series III Type

233-205 crimp-contact connectors with accessory threads

Wall Mount and In-line Dimensions

Shell Size Code	Shell Size	A Thread -.1P-.3L-TS-2A	B Sq	B'	C Bsc	D Bsc[7]	E	F	G	G'	H	J Thread	L Thread	L' Thread	ØM Max
A	9	.6250	.949 (24.10) .925 (23.50)	1.094 (27.79) 1.054 (26.77)	.719 (18.26)	.594 (15.09)	.136 (3.45) .120 (3.05)	.224 (5.69) .208 (5.28)	.098 (2.49) .083 (2.11)	.179 (4.55) .140 (3.56)	.820 (20.83) .771 (19.58)	M12 X 1.0-6g 0.100R	.112-40 UNC	M3X 0.5	.858 (21.79)
B	11	.7500	1.043 (26.49) 1.019 (25.88)	1.187 (30.15) 1.147 (29.13)	.812 (20.62)	.719 (18.26)		.202 (5.13) .186 (4.72)				M15 X 1.0-6g 0.100R			.984 (24.99)
C	13	.8750	1.138 (28.91) 1.114 (28.30)	1.281 (32.54) 1.241 (31.52)	.906 (23.01)	.812 (20.62)						M18 X 1.0-6g 0.100R			1.157 (29.39)
D	15	1.0000	1.232 (31.29) 1.208 (30.68)	1.344 (34.14) 1.304 (33.12)	.969 (24.61)	.906 (23.01)		.181 (4.60) .165 (4.19)				M22 X 1.0-6g 0.100R			1.280 (32.51)
E	17	1.1875	1.323 (33.60) 1.299 (32.99)	1.437 (36.50) 1.397 (35.48)	1.062 (26.97)	.969 (24.61)		.202 (5.13) .186 (4.72)				M25 X 1.0-6g 0.100R			1.406 (35.71)
F	19	1.2500	1.449 (36.80) 1.425 (36.20)	1.531 (38.89) 1.491 (37.87)	1.156 (29.36)	1.062 (26.97)						M28 X 1.0-6g 0.100R			1.516 (38.51)
G	21	1.3750	1.575 (40.00) 1.551 (39.40)	1.625 (41.28) 1.585 (40.26)	1.250 (31.75)	1.156 (29.36)			.126 (3.20) .083 (2.11)	.190 (4.83) .170 (4.32)	.790 (20.07) .741 (18.82)	M31 X 1.0-6g 0.100R			1.642 (41.71)
H	23	1.5000	1.701 (43.21) 1.677 (42.60)	1.750 (44.45) 1.710 (43.43)	1.375 (34.92)	1.250 (31.75)	.162 (4.11) .146 (3.71)	.250 (6.35) .234 (5.94)				M34 X 1.0-6g 0.100R	.138-32 UNC	M4X0.7	1.768 (44.91)
J	25	1.6250	1.823 (46.30) 1.799 (45.69)	1.875 (47.63) 1.835 (46.61)	1.500 (38.10)	1.375 (34.92)						M37 X 1.0-6g 0.100R			1.890 (48.01)

Jam Nut Dimensions

Shell Size Code	Shell Size	T Thread	Ø U	V	W Flat	X Thread	Y Thread	Z
A	09	.6250-.1P-.3L-TS-2A	1.200 (30.48) 1.178 (29.92)	1.078 (27.38) 1.048 (26.62)	.654 (16.61) .645 (16.38)	M17 X 1.0-6g 0.100R	M12 X 1.0-6g 0.100R	0.122 0.083
B	11	.7500-.1P-.3L-TS-2A	1.386 (35.20) 1.362 (34.59)	1.268 (32.21) 1.236 (31.39)	.755 (19.18) .745 (18.92)	M20 X 1.0-6g 0.100R	M15 X 1.0-6g 0.100R	
C	13	.8750-.1P-.3L-TS-2A	1.512 (38.40) 1.488 (37.80)	1.390 (35.31) 1.358 (34.49)	.942 (23.93) .932 (23.67)	M25 X 1.0-6g 0.100R	M18 X 1.0-6g 0.100R	
D	15	1.0000-.1P-.3L-TS-2A	1.638 (41.61) 1.614 (41.00)	1.516 (38.51) 1.484 (37.69)	1.066 (27.08) 1.056 (26.82)	M28 X 1.0-6g 0.100R	M22 X 1.0-6g 0.100R	
E	17	1.1875-.1P-.3L-TS-2A	1.764 (44.81) 1.740 (44.20)	1.642 (41.71) 1.610 (40.89)	1.191 (30.25) 1.181 (30.00)	M32 X 1.0-6g 0.100R	M25 X 1.0-6g 0.100R	
F	19	1.2500-.1P-.3L-TS-2A	1.949 (49.50) 1.925 (48.90)	1.827 (46.41) 1.795 (45.59)	1.316 (33.43) 1.306 (33.17)	M35 X 1.0-6g 0.100R	M28 X 1.0-6g 0.100R	0.153 0.114
G	21	1.3750-.1P-.3L-TS-2A	2.075 (52.71) 2.051 (52.10)	1.953 (49.61) 1.921 (48.79)	1.441 (36.60) 1.431 (36.35)	M38 X 1.0-6g 0.100R	M31 X 1.0-6g 0.100R	
H	23	1.5000-.1P-.3L-TS-2A	2.201 (55.91) 2.177 (55.30)	2.079 (52.81) 2.047 (51.99)	1.566 (39.78) 1.556 (39.52)	M41 X 1.0-6g 0.100R	M34 X 1.0-6g 0.100R	
J	25	1.6250-.1P-.3L-TS-2A	2.323 (59.00) 2.299 (58.39)	2.205 (56.01) 2.173 (55.19)	1.691 (42.95) 1.681 (42.70)	M44 X 1.0-6g 0.100R	M37 X 1.0-6g 0.100R	

© 2022 Glenair, Inc • 1211 Air Way, Glendale, CA 91201 • 818-247-6000 • www.glenair.com • U.S. CAGE code 06324 • SuperNine® Catalog
Dimensions in Inches (millimeters) are subject to change without notice.

ADVANCED PERFORMANCE

SuperNine® Environmental Series

MIL-DTL-38999 Series III Type

233-206 Crimp-contact connectors with banding porch / boot groove

In-Line Receptacle Front View



In-Line Receptacle Rear View



Part Number Development						
Sample Part Number	**233-206**	**-G6**	**MT**	**17-8**	**P**	**N**
Series / Basic Part No.	**233-206 =** SuperNine crimp contact wire harness connectors					
Connector Style*	**G6** = Plug, with EMI spring **05** = Receptacle, In-Line **07** = Receptacle, Jam Nut **00** = Receptacle, Wall Mount with Slotted Holes **CM** = Receptacle, Wall Mount with Metric Clinch Nuts **CS** = Recetpabcle, Wall Mount with Standard Clinch Nuts **HM** = Recetpacle, Wall Mount with Metric Helicoils **HS** = Receptacle, Wall Mount with Standard Helicoils					
Finish	**NF** = Aluminum alloy/Cadmium Olive Drab **ME** = Aluminum alloy/Electroless Nickel **MT** = Aluminum alloy/Nickel PTFE **ZR** = Aluminum alloy/Black Zinc Nickel					
Shell Size-Insert Arrangement*	Per MIL-STD-1560					
Contact Type	**P** = Pin, Gold, 1500 cycles **H** = Pin, Pd/Ni, 1500 cycles **A** = Pin Insert, Less Pin Contacts **S** = Socket, Gold, 1500 Cycles **J** = Socket, Pd/Ni, 1500 cycles **B** = Socket Insert, Less Socket Contacts					
Alternate Polarization*	**A, B, C, D, E, N** = Normal (IAW MIL-DTL-38999 Series III)					

***Refer to Section A for complete details**

G6 - PLUG WITH BANDING PORCH AND BOOT GROOVE

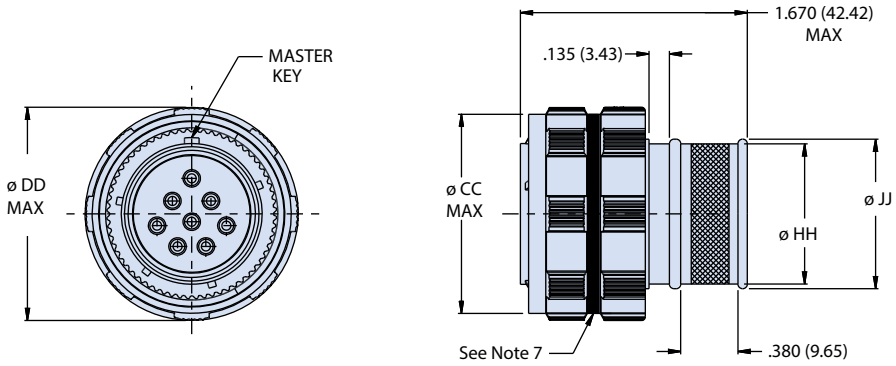

Plug Dimensions			
Shell Size Code	**Shell Size**	**Ø CC Max**	**Ø DD Max**
A	09	.811 (20.60)	.858 (21.79)
B	11	.929 (23.60)	.984 (24.99)
C	13	1.110 (28.19)	1.157 (29.39)
D	15	1.232 (31.29)	1.280 (32.51)
E	17	1.358 (34.49)	1.406 (35.71)
F	19	1.469 (37.31)	1.516 (38.51)
G	21	1.594 (40.49)	1.642 (41.71)
H	23	1.720 (43.69)	1.768 (44.91)
J	25	1.843 (46.81)	1.890 (48.01)

NOTES

1. 233-206 is designed to meet or exceed the mechanical, electrical, environmental and dimensional requirements of D38999/20, /24 & /26. Except as shown and/or noted. Connectors mate with any QPL manufacturer's MIL-DTL-38999, Series III connectors having the same shell size, insert arrangement, and polarization
2. 233-206 connectors are designed to withstand a minimum of 1500 mating durability cycles when mated to a SuperNine® mating connector and appropriate contacts. Contact finish should be the same for both mating connectors to optimize performance.
3. Insert arrangements IAW MIL-STD-1560 arrangements. Contact manufacturer for additional arrangement options.
4. Alternate polarization 'U' is a non-standard/non-mil-spec option, allows mating to any QPL manufacturers MIL-DTL-38999 connector, intended for use in testing facilities.
5. Connector is supplied with contacts (including spares), insertion/removal tool and sealing plugs.
6. Insertion/removal tool and sealing plugs supplied.
7. Blue color band indicates rear release retention system.
8. Front panel mount only
9. Material/finish
   - Shell, barrel, coupling nut jam nut: see part number development table
   - Ratchet Ring, detent spring: stainless steel/passivated
   - Grounding spring: BeCu alloy/electroless nickel
   - Insulator: high grade rigid dielectric/N.A.
   - Seals, grommet: fluorosilicone blend/N.A.
   - Contacts: copper alloy/see part number development table

© 2022 Glenair, Inc • 1211 Air Way, Glendale, CA 91201 • 818-247-6000 • www.glenair.com • U.S. CAGE code 06324 • SuperNine® Catalog
Dimensions in Inches (millimeters) are subject to change without notice.

Rev. 06.19.24

05 - IN-LINE RECEPTACLE WITH BANDING PORCH AND BOOT GROOVE

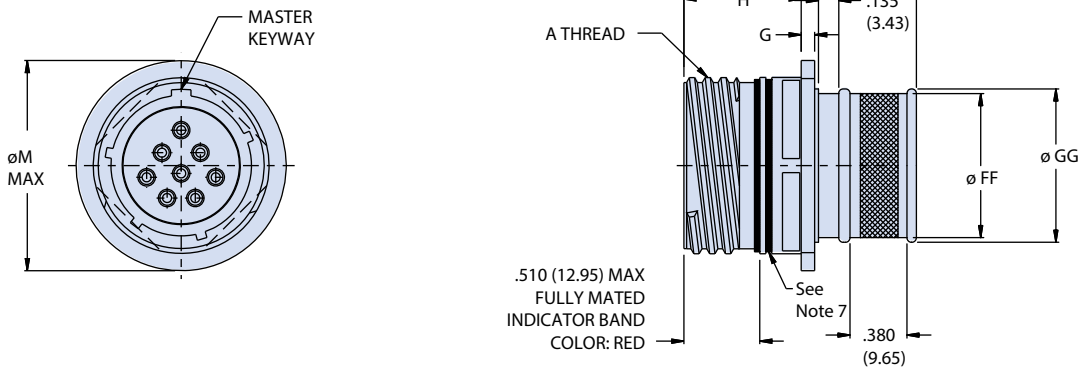

07 - JAM NUT RECEPTACLE WITH BANDING PORCH AND BOOT GROOVE

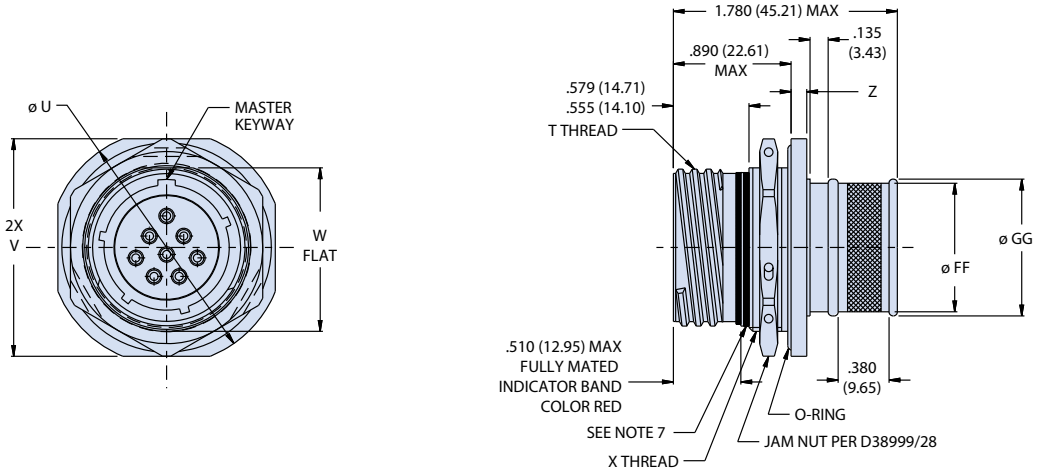

© 2022 Glenair, Inc • 1211 Air Way, Glendale, CA 91201 • 818-247-6000 • www.glenair.com • U.S. CAGE code 06324 • SuperNine® Catalog
Dimensions in Inches (millimeters) are subject to change without notice.

Rev. 06.19.24

SuperNine® Environmental Series

MIL-DTL-38999 Series III Type

233-206 Crimp-contact connectors with banding porch / boot groove

00 - SQUARE FLANGE RECEPTACLE WITH BANDING PORCH AND BOOT GROOVE

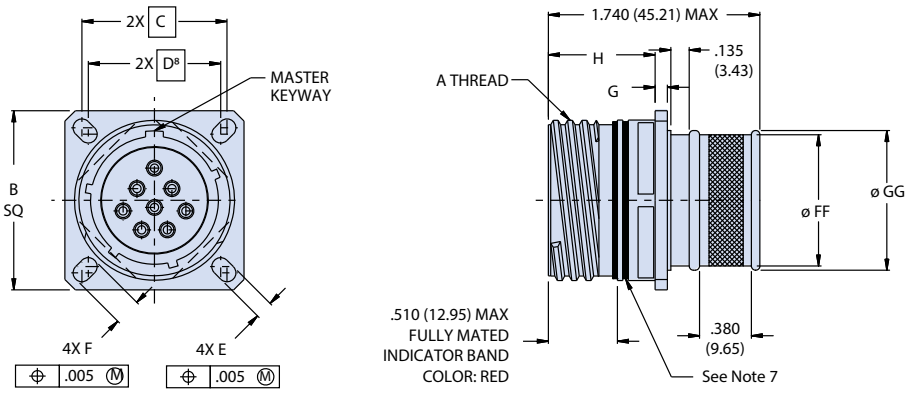

CS AND CM - WALL MOUNT RECEPTACLE WITH BANDING PORCH AND BOOT GROOVE

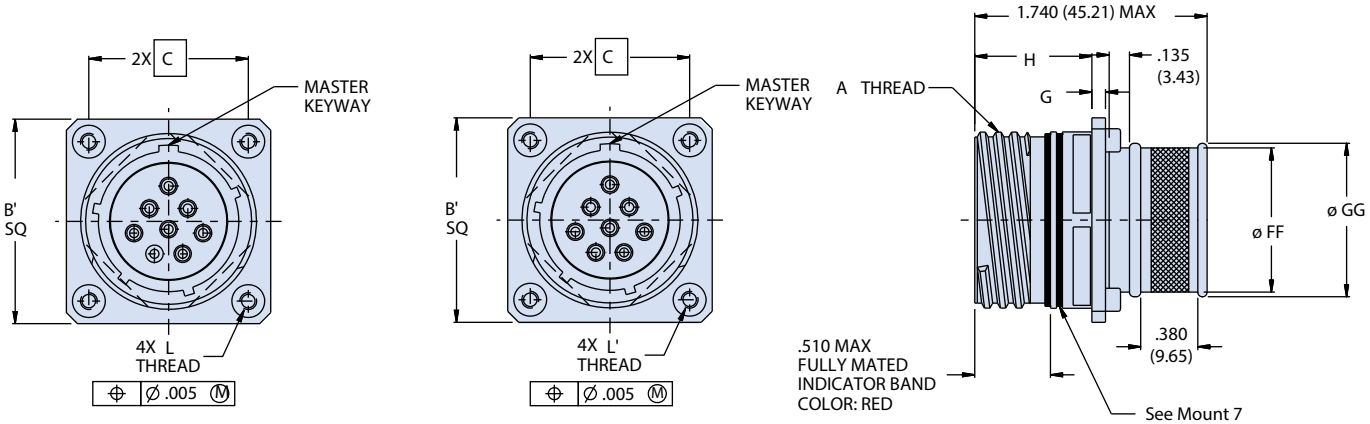

CS - STANDARD CLINCH NUTS

CM - METRIC CLINCH NUTS

HS AND HM - WALL MOUNT RECEPTACLE WITH BANDING PORCH AND BOOT GROOVE

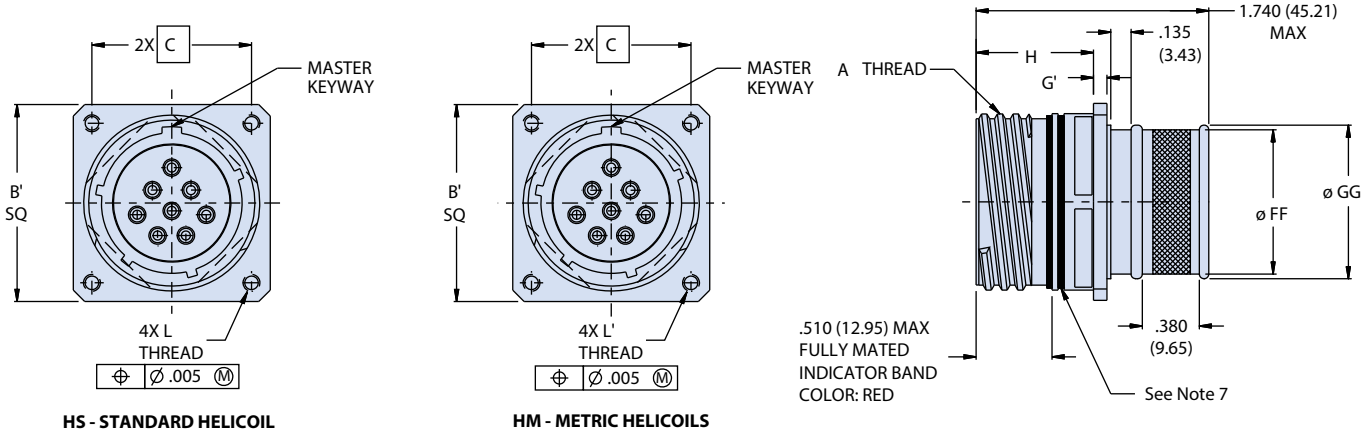

HS - STANDARD HELICOIL

HM - METRIC HELICOILS

© 2022 Glenair, Inc • 1211 Air Way, Glendale, CA 91201 • 818-247-6000 • www.glenair.com • U.S. CAGE code 06324 • SuperNine® Catalog
Dimensions in Inches (millimeters) are subject to change without notice.

SuperNine® Environmental Series

MIL-DTL-38999 Series III Type

233-206 crimp-contact connectors with banding porch / boot groove

Wall Mount and In-Line Dimensions

Shell Size Code	Shell Size	A Thread	B Sq	B' Sq	C Bsc	D Bsc[8]	E	F	G	G'	H	L Thd	L' Thd	Ø M Max
A	09	.6250-.1P-.3L-TS-2A	.949 (24.10) .925 (23.50)	1.094 (27.79) 1.054 (26.77)	.719 (18.26)	.594 (15.09)	.136 (3.45) .120 (3.05)	.224 (5.69) .208 (5.28)	.098 (2.49) .083 (2.11)	.179 (4.55) .140 (3.56)	.820 (20.83) .771 (19.58)	.112-40 UNC-2B	M3X0.5	.875 (22.23)
B	11	.7500-.1P-.3L-TS-2A	1.043 (26.49) 1.019 (25.88)	1.187 (30.15) 1.147 (29.13)	.812 (20.62)	.719 (18.26)		.202 (5.13) .186 (4.72)						.994 (25.25)
C	13	.8750-.1P-.3L-TS-2A	1.138 (28.91) 1.114 (28.30)	1.281 (32.54) 1.241 (31.52)	.906 (23.01)	.812 (20.62)								1.167 (29.64)
D	15	1.0000-.1P-.3L-TS-2A	1.232 (31.29) 1.208 (30.68)	1.344 (34.14) 1.304 (33.12)	.969 (24.61)	.906 (23.01)		.181 (4.60) .165 (4.19)						1.290 (32.77)
E	17	1.1875-.1P-.3L-TS-2A	1.323 (33.60) 1.299 (32.99)	1.437 (36.50) 1.397 (35.48)	1.062 (26.97)	.969 (24.61)								1.416 (35.97)
F	19	1.2500-.1P-.3L-TS-2A	1.449 (36.80) 1.425 (36.20)	1.531 (38.89) 1.491 (37.87)	1.156 (29.36)	1.062 (26.97)		.202 (5.13) .186 (4.72)						1.526 (38.76)
G	21	1.3750-.1P-.3L-TS-2A	1.575 (40.00) 1.551 (39.40)	1.625 (41.28) 1.585 (40.26)	1.250 (31.75)	1.156 (29.36)			.126 (3.20) .083 (2.11)	.190 (4.83) .170 (4.32)	.790 (20.07) .741 (18.82)			1.652 (41.96)
H	23	1.5000-.1P-.3L-TS-2A	1.701 (43.21) 1.677 (42.60)	1.750 (44.45) 1.710 (43.43)	1.375 (34.92)	1.250 (31.75)	.162 (4.11) .146 (3.71)	.250 (6.35) .234 (5.94)				.138-32 UNC-2B	M4X0.7	1.778 (45.16)
J	25	1.6250-.1P-.3L-TS-2A	1.823 (46.30) 1.799 (45.69)	1.875 (47.63) 1.835 (46.61)	1.500 (38.10)	1.375 (34.92)								1.900 (48.26)

Jam Nut Dimensions

Shell Size Code	Shell Size	T Thread	Ø U	V	W Flat	X Thread	Z
A	09	.6250-.1P-.3L-TS-2A	1.200 (30.48) 1.178 (29.92)	1.078 (27.38) 1.048 (26.62)	0.654 (16.61) 0.645 (16.38)	M17 X 1.0-6g 0.100R	0.122 (3.10) 0.083 (2.11)
B	11	.7500-.1P-.3L-TS-2A	1.386 (35.20) 1.362 (34.59)	1.268 (32.21) 1.236 (31.39)	0.755 (19.18) 0.745 (18.92)	M20 X 1.0-6g 0.100R	
C	13	.8750-.1P-.3L-TS-2A	1.512 (38.40) 1.488 (37.80)	1.390 (35.31) 1.358 (34.49)	0.942 (23.93) 0.932 (23.67)	M25 X 1.0-6g 0.100R	
D	15	1.0000-.1P-.3L-TS-2A	1.638 (41.61) 1.614 (41.00)	1.516 (38.51) 1.484 (37.69)	1.066 (27.08) 1.056 (26.82)	M28 X 1.0-6g 0.100R	
E	17	1.1875-.1P-.3L-TS-2A	1.764 (44.81) 1.740 (44.20)	1.642 (41.71) 1.610 (40.89)	1.191 (30.25) 1.181 (30.00)	M32 X 1.0-6g 0.100R*	
F	19	1.2500-.1P-.3L-TS-2A	1.949 (49.50) 1.925 (48.90)	1.827 (46.41) 1.795 (45.59)	1.316 (33.43) 1.306 (33.17)	M35 X 1.0-6g 0.100R	0.153 (3.89) 0.114 (2.90)
G	21	1.3750-.1P-.3L-TS-2A	2.075 (52.71) 2.051 (52.10)	1.953 (49.61) 1.921 (48.79)	1.441 (36.60) 1.431 (36.35)	M38 X 1.0-6g 0.100R	
H	23	1.5000-.1P-.3L-TS-2A	2.201 (55.91) 2.177 (55.30)	2.079 (52.81) 2.047 (51.99)	1.566 (39.78) 1.556 (39.52)	M41 X 1.0-6g 0.100R	
J	25	1.6250-.1P-.3L-TS-2A	2.323 (59.00) 2.299 (58.39)	2.205 (56.01) 2.173 (55.19)	1.691 (42.95) 1.681 (42.70)	M44 X 1.0-6g 0.100R	

* Modified major diameter 31.95 - 31.80 (1.257 - 1.252)

Integral Backshell Dimensions*

Shell Size Code	Shell Size	Ø FF	Ø GG	Ø HH	Ø JJ
A	09	.475 (12.07)	.538 (13.67)	.420 (10.67)	.465 (11.81)
B	11	.600 (15.24)	.662 (16.81)	.550 (13.97)	.595 (15.11)
C	13	.700 (17.78)	.762 (19.35)	.670 (17.02)	.715 (18.16)
D	15	.835 (21.21)	.898 (22.81)	.815 (20.70)	.860 (21.84)
E	17	.960 (24.38)	1.022 (25.96)	.945 (24.00)	.990 (25.15)
F	19	1.062 (26.97)	1.125 (28.58)	1.050 (26.67)	1.100 (27.94)
G	21	1.188 (30.18)	1.250 (31.75)	1.170 (29.72)	1.220 (30.99)
H	23	1.275 (32.39)	1.338 (33.99)	1.290 (32.77)	1.340 (34.04)
J	25	1.475 (37.47)	1.538 (39.07)	1.400 (35.56)	1.450 (36.83)

See accessories section for bands and banding tools

© 2022 Glenair, Inc • 1211 Air Way, Glendale, CA 91201 • 818-247-6000 • www.glenair.com • U.S. CAGE code 06324 • SuperNine® Catalog
Dimensions in Inches (millimeters) are subject to change without notice.

ADVANCED PERFORMANCE

SuperNine® Environmental Series

MIL-DTL-38999 Series III Type

233-221 Crimp-contact 90° "Cobra" plug with banding porch



Part Number Development							
Sample Part Number	233-221	-G6	ME	25-35	S	N	-06
Series / Basic Part No.	233-221 = SuperNine crimp contact wire harness connectors						
Connector Style*	G6 = 90° Low profile plug, with integral backshell						
Finish	NF = Aluminum alloy/Cadmium Olive Drab MT = Aluminum alloy/Nickel PTFE ME = Aluminum alloy/Electroless Nickel ZR = Aluminum alloy/Black Zinc Nickel MN = Aluminum alloy, Tri-Nickel, 1,000 hrs salt spray						
Shell Size-Insert Arrangement*	Per MIL-STD-1560, not all arrangements available for 233-221 connectors, contact factory						
Contact Type	P = Pin S = Socket						
Alternate Polarization*	A, B, C, D, E, N = Normal (IAW MIL-DTL-38999 Series III)						
Cable Entry	See Cable Entry Code Table						
Cable Exit Direction	See Figure 2, omit for 0° as shown in Figure I						

***Refer to Section A for complete details**

Plug Dimensions								
Shell Size	ØA Max	ØB Max	Coupling Nut Thread	C Max	Max Entry	PW1 Max	PW2 Max	PJ Max
9	.811 (20.60)	.858 (21.79)	.6250 -0.1P-0.3L-TS-2B	1.500 (38.10)	6	1.572 (39.93)	1.898 (48.21)	1.744 (44.30)
11	.929 (23.60)	.984 (24.99)	.7500 -0.1P-0.3L-TS-2B	1.560 (39.62)	8	1.632 (41.45)	1.958 (49.73)	1.804 (45.82)
13	1.110 (28.19)	1.157 (29.39)	.8750 -0.1P-0.3L-TS-2B	1.625 (41.28)	8	1.697 (43.10)	2.023 (51.38)	1.869 (47.47)
15	1.232 (31.29)	1.280 (32.51)	1.0000 -0.1P-0.3L-TS-2B	1.720 (43.69)	11	1.792 (45.52)	2.118 (53.80)	1.964 (49.89)
17	1.358 (34.49)	1.406 (35.71)	1.1875 -0.1P-0.3L-TS-2B	1.750 (44.45)	12	1.822 (46.28)	2.148 (54.56)	1.994 (50.65)
19	1.469 (37.31)	1.516 (38.51)	1.2500 -0.1P-0.3L-TS-2B	1.813 (46.05)	14	1.885 (47.88)	2.211 (56.16)	2.057 (52.25)
21	1.594 (40.49)	1.642 (41.71)	1.3750 -0.1P-0.3L-TS-2B	1.950 (49.53)	14	2.023 (51.38)	2.346 (59.59)	2.194 (55.73)
23	1.720 (43.69)	1.768 (44.91)	1.5000 -0.1P-0.3L-TS-2B	2.063 (52.40)	16	2.136 (54.25)	2.459 (62.46)	2.307 (58.60)
25	1.843 (46.81)	1.890 (48.01)	1.6250 -0.1P-0.3L-TS-2B	2.375 (60.33)	17	2.448 (62.18)	2.771 (70.38)	2.619 (66.52)

Cable Entry Code Table							
Code	Entry Size	Code	Entry Size	Code	Entry Size	Code	Entry Size
02	.125 (3.18)	06	.375(9.52)	10	.625(15.88)	14	.875(22.23)
03	.188 (4.78)	07	.438(11.13)	11	.688(17.48)	15	.938(23.83)
04	.250(6.35)	08	.500(12.70)	12	.750(19.05)	16	1.000(25.4)
05	.313(7.95)	09	.563(14.30)	13	.813(20.65)	17	1.063 (27.00)

Cable Exit Code Direction Table															
Code	D°	Code	D°	Code	D°	Code	D°	Code	D°	Code	D°	Code	D°	Code	D°
A	45	D	180	G	315	K	60	N	120	S	195	V	255	Y	330
B	90	E	225	H	15	L	75	P	150	T	210	W	285	Z	345
C	135	F	270	J	30	M	105	R	165	U	240	X	300		

NOTES

1. 233-221 Plug connector is designed to meet the general mechanical dimensional, electrical, and environmentl requirements of MIL-DTL-38999, D38999/26, and MIL-STD-1560, except as shown and/or noted. Plug mates with and QPL manufacturers receptacles having the same shell size, insert arrangement, polarization, and opposite contact style
2. Standard insert arrangements are in accordance with MIL-STD-1560, contact manufacturer for available arrangements. Not all arrangements are avaialble for 233-221 plug connectors.
3. Connector is supplied with contacts (including spares), insertion/removal tool and sealing plugs
4. Material/finish
   - Barrel, coupling nut, cover: see part number development
   - Insulator: high grade rigid dielectric/N.A.
   - Seals, grommet: fluorosilicone blend/N.A.
   - Contacts: copper alloy/gold plate

© 2022 Glenair, Inc • 1211 Air Way, Glendale, CA 91201 • 818-247-6000 • www.glenair.com • U.S. CAGE code 06324 • SuperNine® Catalog
Dimensions in Inches (millimeters) are subject to change without notice.

Rev. 06.19.24

SuperNine® Environmental Series

MIL-DTL-38999 Series III Type

233-221 Crimp-contact 90° "Cobra" plug with banding porch

233-221 DIMENSIONS AND CABLE EXIT DIRECTIONS

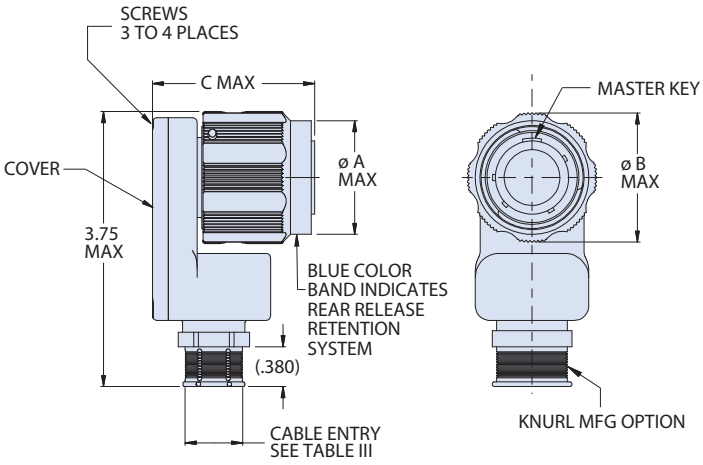

FIGURE 1

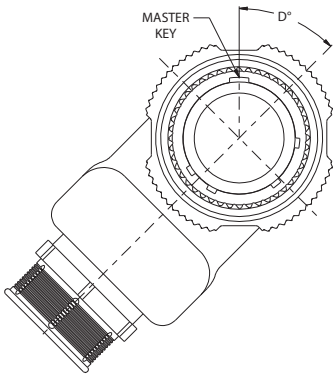

FIGURE 2

CABLE EXIT DIRECTION
(DIRECTION A SHOWN)

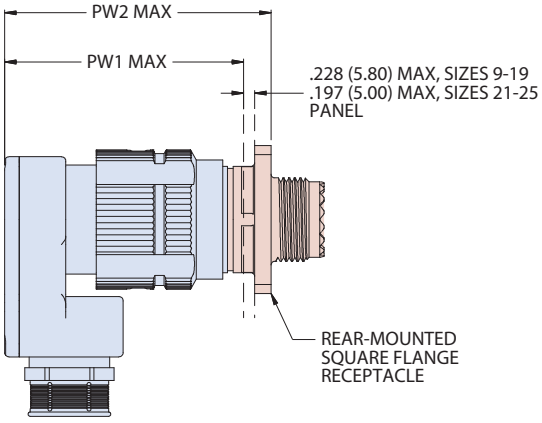

SHOWN MATED
(SQUARE FLANGE)

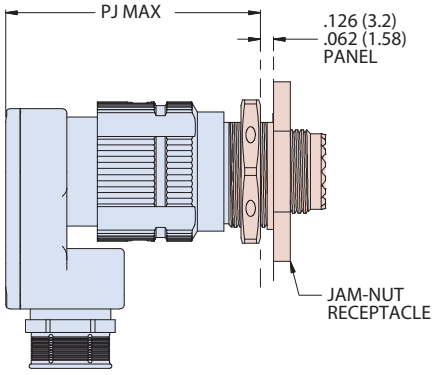

SHOWN MATED
(JAM NUT)

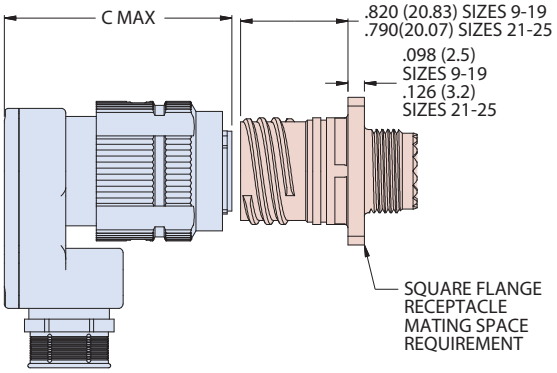

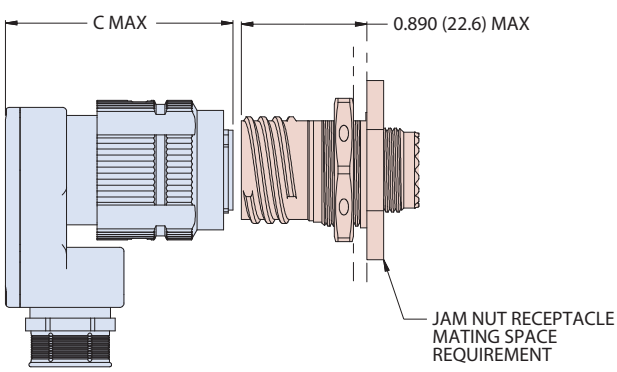

© 2022 Glenair, Inc • 1211 Air Way, Glendale, CA 91201 • 818-247-6000 • www.glenair.com • U.S. CAGE code 06324 • SuperNine® Catalog
Dimensions in Inches (millimeters) are subject to change without notice.

Rev. 03.12.24

SuperNine® Environmental Series

MIL-DTL-38999 Series III Type

233-215 1K PSI crimp-contact piston-sealed connectors



Part Number Development							
Sample Part Number	233-215	-	G6	NF	17-8	P	T
Series / Basic Part No.	233-215 = Series 23 SuperNine, Standard MIL-DTL-38999 panel mount configuration						
Rear Accessory Option	See Rear Accessory Option table						
Connector Style*	See Connector Style table						
Finish	NF = Al alloy/cadmium olive drab; AB = marine bronze/NA; ZR = Al alloy/black zinc nickel; ME = Al alloy/electroless nickel; MT = Al alloy/nickel PTFE; Z1 = SST, passivate						
Shell Size-Insert Arrangement*	Per MIL-STD-1560						
Contact Type	P = Pin, gold 1500 cycles; S = Socket, gold 1500 cycles; A = Less pin contacts; B = Less socket ontacts; H = Pin, Pd/Ni 1500 cycles; J = Socket, Pd/Ni 1500 cycles						
Alternate Polarization	V, W, X, Y, Z, T = Normal (IAW MIL-DTL-38999 Series III); see key or keyway position tables						

***Refer to Section A for complete details**

Rear Accessory Option	
Sym	Description
-	Accessory thread and teeth
B	Integral backshell, boot adaptor

Panel Mount Options	
Sym	Description
-	Standard MIL-DTL-38999 panel mount configuration

Connector Style	
Sym	Description
G6	Plug with EMI spring (D38999/26 type)
05	Inline receptacle
07	Jam nut receptacle (D38999/24 type)
HM	Wall mount receptacle with metric helicoils
HS	Wall mount receptacle with standard helicoils

G6 AND BG6 PISTON SEAL PLUG, ACCESSORY THREAD OR INTEGRAL BACKSHELL

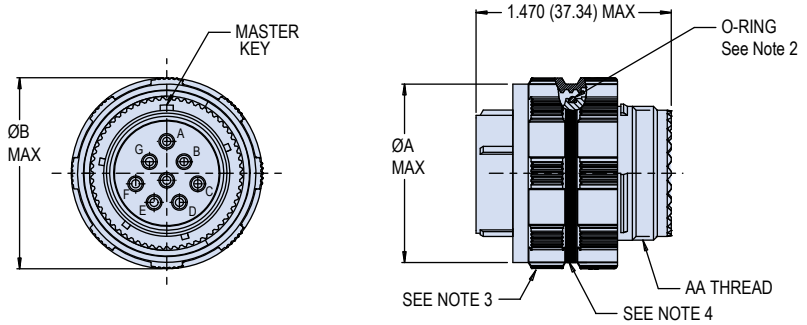

–G6 - ACCESSORY THREAD

BG6 - INTEGRAL BANDING PORCH

Plug requires a special protective cover to accommodate O-Ring seal. See Part Number 239-200 in accessories, section H of this catalog.

Plug Dimensions			
Shell Size	ØA	ØB	AA Thread
9	.815 (20.70)	.875 (22.23)	M12 X 1.0-6g 0.100R
11	.928 (23.57)	.988 (25.10)	M15 X 1.0-6g 0.100R
13	1.089 (27.66)	1.149 (29.18)	M18 X 1.0-6g 0.100R
15	1.214 (30.84)	1.274 (32.36)	M22 X 1.0-6g 0.100R
17	1.367 (34.72)	1.427 (36.25)	M25 X 1.0-6g 0.100R
19	1.464 (37.19)	1.524 (38.71)	M28 X 1.0-6g 0.100R
21	1.589 (40.36)	1.649 (41.88)	M31 X 1.0-6g 0.100R
23	1.714 (43.54)	1.774 (45.06)	M34 X 1.0-6g 0.100R
25	1.839 (46.71)	1.899 (48.23)	M37 X 1.0-6g 0.100R

Integral Backshell Dimensions		
Shell Size	ØBB	ØCC
9	.420 (10.67)	.465 (11.81)
11	.550 (13.97)	.595 (15.11)
13	.670 (17.02)	.715 (18.16)
15	.815 (20.70)	.860 (21.84)
17	.945 (24.00)	.990 (25.15)
19	1.050 (26.67)	1.100 (27.94)
21	1.170 (29.72)	1.220 (30.99)
23	1.290 (32.77)	1.340 (34.04)
25	1.400 (35.56)	1.450 (36.83)

© 2022 Glenair, Inc • 1211 Air Way, Glendale, CA 91201 • 818-247-6000 • www.glenair.com • U.S. CAGE code 06324 • SuperNine® Catalog
Dimensions in Inches (millimeters) are subject to change without notice.

SuperNine® Environmental Series

MIL-DTL-38999 Series III Type

233-215 1K PSI crimp-contact piston-sealed connectors

05 AND B05 PISTON SEAL BANDING PORCH RECEPTACLE, ACCESSORY THREAD OR INTEGRAL BANDING PORCH

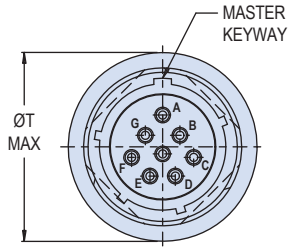

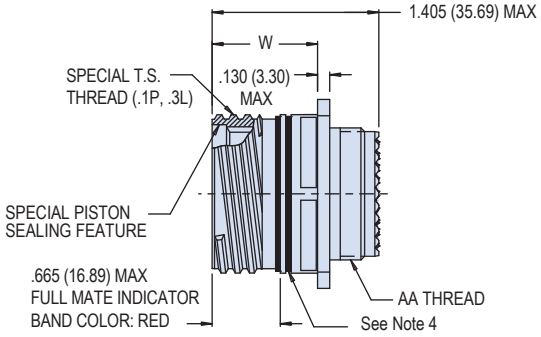

05 - ACCESSORY THREAD

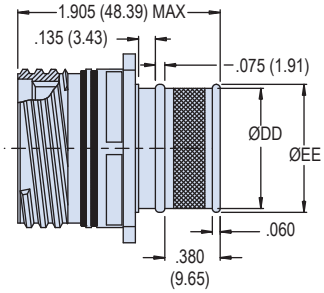

B05 - INTEGRAL BANDING PORCH

In-line with Integral Backshell Dimensions			
Shell Size	ØT MAX	W	AA THREAD
9	.858 (21.79)	.965 (24.51) .916 (23.27)	M12 X 1.0-6g 0.100R
11	.984 (24.99)		M15 X 1.0-6g 0.100R
13	1.157 (29.39)		M18 X 1.0-6g 0.100R
15	1.280 (32.51)		M22 X 1.0-6g 0.100R
17	1.406 (35.71)		M25 X 1.0-6g 0.100R
19	1.516 (38.51)		M28 X 1.0-6g 0.100R
21	1.642 (41.71)	.935 (23.75) .886 (22.50)	M31 X 1.0-6g 0.100R
23	1.768 (44.91)		M34 X 1.0-6g 0.100R
25	1.890 (48.01)		M37 X 1.0-6g 0.100R

In-line with Integral Backshell Dimensions		
Shell Size	ØDD	ØEE
	In	In
9	.475 (12.07)	.538 (13.67)
11	.600 (15.24)	.662 (16.81)
13	.700 (17.78)	.762 (19.35)
15	.835 (21.21)	.898 (22.81)
17	.960 (24.38)	1.022 (25.96)
19	1.062 (26.97)	1.125 (28.58)
21	1.188 (30.18)	1.250 (31.75)
23	1.275 (32.39)	1.338 (33.99)
25	1.475 (37.47)	1.538 (39.07)

NOTES

1. 233-215 is designed to meet the general requirements of D38999/20, /24 & /26 and MIL-STD-1560
   - Receptacles can be installed into standard panel cutouts.
   - Ingress protection IP68 or better expected
   - Connector accessory threads accept standard backshells
   - Connector accepts standard AS39029 type contacts
   - Connectors cannot be mated to standard MIL-DTL-38999 connectors or protective covers
2. 233-215 piston seal interface is rated to 1000 PSI water submersion (2300 FT/700m) when fully mated or protected with 239-200 cover. Cable sealing and panel sealing capability dependent on customer installation
3. Use with 233PS215 wall mount receptacle with dual O-ring sealing and tapped hole mounting for improved sealing
4. Blue band indicates rear release retention system
5. Supplied with contacts (including spares) and insertion/removal tool.
6. Material/finish
   - Shell, barrel, coupling nut, jam-nut: see P/N development
   - Ratchet Ring, Detent spring: Stainless steel/passivated
   - insulator: high grade rigid dielectric/N.A.
   - Seals, grommet: fluorosilicone blend/N.A.
   - Contacts: copper alloy / see part P/N development

Key Positions (Plug)				
Alternate Key Code	A°	B°	C°	D°
T	95	135	220	275
V	92	127	253	325
W	70	113	235	322
X	35	135	210	285
Y	54	150	239	314
Z	81	126	202	250

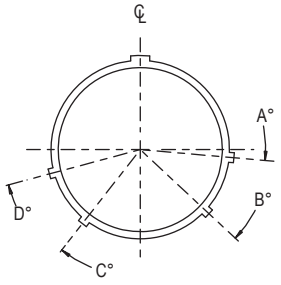

FACE VIEW - PLUG

Keyway Positions (Receptacle)				
Alternate Keyway Code	A°	B°	C°	D°
T	95	135	220	275
V	92	127	253	325
W	70	113	235	322
X	35	135	210	285
Y	54	150	239	314
Z	81	126	202	250

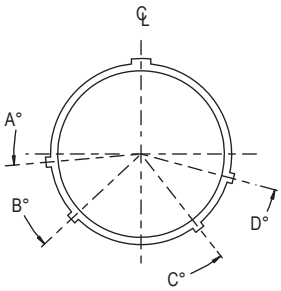

FACE VIEW - RECEPTACLE

© 2022 Glenair, Inc • 1211 Air Way, Glendale, CA 91201 • 818-247-6000 • www.glenair.com • U.S. CAGE code 06324 • SuperNine® Catalog
Dimensions in Inches (millimeters) are subject to change without notice.

-07 AND B07 PISTON SEAL JAM NUT RECEPTACLE, WITH ACCESSORY THREADS OR INTEGRAL BANDING PORCH

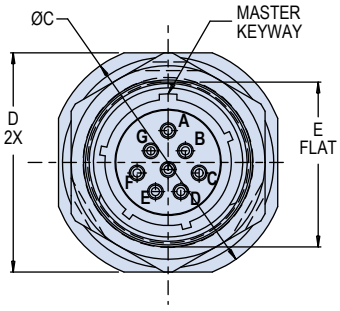

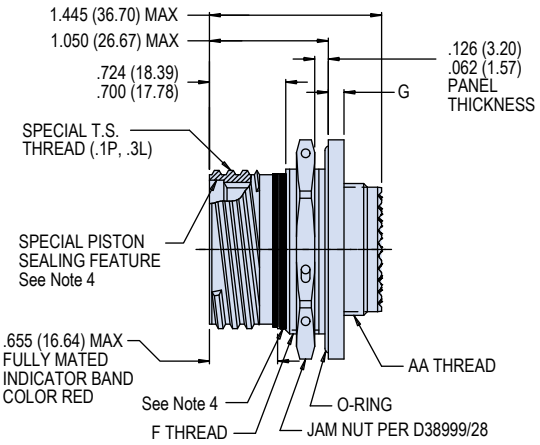

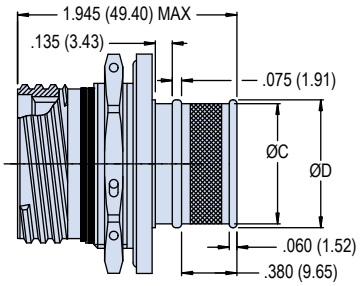

07 - ACCESSORY THREAD

B07 - INTEGRAL BANDING PORCH

Jam Nut Dimensions						
Shell Size	ØC	D	E Flat	F Thread	AA Thread	G
9	1.200 (30.48) 1.178 (29.92)	1.078 (27.38) 1.048 (26.62)	.655 (16.64) .645 (16.38)	M17 X 1.0 -6g 0.100R	M12 X 1.0 -6g 0.100R	.122 (3.10) .083 (2.11)
11	1.386 (35.20) 1.362 (34.59)	1.268 (32.21) 1.236 (31.39)	.755 (19.18) .745 (18.92)	M20 X 1.0 -6g 0.100R	M15 X 1.0 -6g 0.100R	
13	1.512 (38.40) 1.488 (37.80)	1.390 (35.31) 1.358 (34.49)	.942 (23.93) .932 (23.67)	M25 X 1.0 -6g 0.100R	M18 X 1.0 -6g 0.100R	
15	1.638 (41.61) 1.614 (41.00)	1.516 (38.51) 1.484 (37.69)	1.066 (27.08) 1.056 (26.82)	M28 X 1.0 -6g 0.100R	M22 X 1.0 -6g 0.100R	
17	1.764 (44.81) 1.740 (44.20)	1.642 (41.71) 1.610 (40.89)	1.191 (30.25) 1.181 (30.00)	M32 X 1.0 -6g 0.100R	M25 X 1.0 -6g 0.100R	
19	1.949 (49.50) 1.925 (48.90)	1.827 (46.41) 1.795 (45.59)	1.316 (33.43) 1.306 (33.17)	M35 X 1.0 -6g 0.100R	M28 X 1.0 -6g 0.100R	.153 (3.89) .114 (2.90)
21	2.075 (52.71) 2.051 (52.10)	1.953 (49.61) 1.921 (48.79)	1.441 (36.60) 1.431 (36.35)	M38 X 1.0 -6g 0.100R	M31 X 1.0 -6g 0.100R	
23	2.201 (55.91) 2.177 (55.30)	2.079 (52.81) 2.047 (51.99)	1.566 (39.78) 1.556 (39.52)	M41 X 1.0 -6g 0.100R	M34 X 1.0 -6g 0.100R	
25	2.323 (59.00) 2.299 (58.39)	2.205 (56.01) 2.173 (55.19)	1.691 (42.95) 1.681 (42.70)	M44 X 1.0 -6g 0.100R	M37 X 1.0 -6g 0.100R	

Integral Banding Porch Dimensions		
Shell Size	ØC	ØD
9	.475 (12.07)	.538 (13.67)
11	.600 (15.24)	.662 (16.81)
13	.700 (17.78)	.762 (19.35)
15	.835 (21.21)	.898 (22.81)
17	.960 (24.38)	1.022 (25.96)
19	1.062 (26.97)	1.125 (28.58)
21	1.188 (30.18)	1.250 (31.75)
23	1.275 (32.39)	1.338 (33.99)
25	1.475 (37.47)	1.538 (39.07)

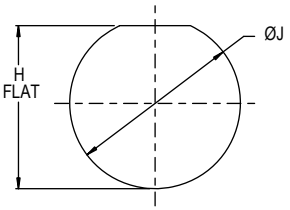

RECOMMENDED MOUNTING CUT OUT FOR JAM NUT RECEPTACLES

Panel Cut Out Dims.		
Shell Size	H Flat	ØJ
9	.703 (17.86) .693 (17.60)	.657 (16.69) .648 (16.46)
11	.835 (21.21) .825 (20.96)	.771 (19.58) .761 (19.33)
13	1.020 (25.91) 1.010 (25.65)	.955 (24.26) .945 (24.00)

Panel Cut Out Dims.		
Shell Size	H Flat	ØJ
15	1.145 (29.08) 1.135 (28.83)	1.085 (27.56) 1.075 (27.30)
17	1.270 (32.26) 1.260 (32.00)	1.210 (30.73) 1.200 (30.48)
19	1.395 (35.43) 1.385 (35.18)	1.335 (33.91) 1.325 (33.65)

Panel Cut Out Dims.		
Shell Size	H Flat	ØJ
21	1.520 (38.61) 1.510 (38.35)	1.460 (37.08) 1.450 (36.83)
23	1.645 (41.78) 1.635 (41.53)	1.585 (40.26) 1.575 (40.00)
25	1.770 (44.96) 1.760 (44.70)	1.710 (43.43) 1.700 (43.18)

© 2022 Glenair, Inc • 1211 Air Way, Glendale, CA 91201 • 818-247-6000 • www.glenair.com • U.S. CAGE code 06324 • SuperNine® Catalog
Dimensions in Inches (millimeters) are subject to change without notice.

SuperNine® Environmental Series

MIL-DTL-38999 Series III Type

233-215 1K PSI crimp-contact piston-sealed connectors

-HS, -HM, BHS AND BHM PISTON SEAL WALL MOUNT RECEPTACLE, WITH ACCESSORY THREAD OR INTEGRAL BANDING PORCH

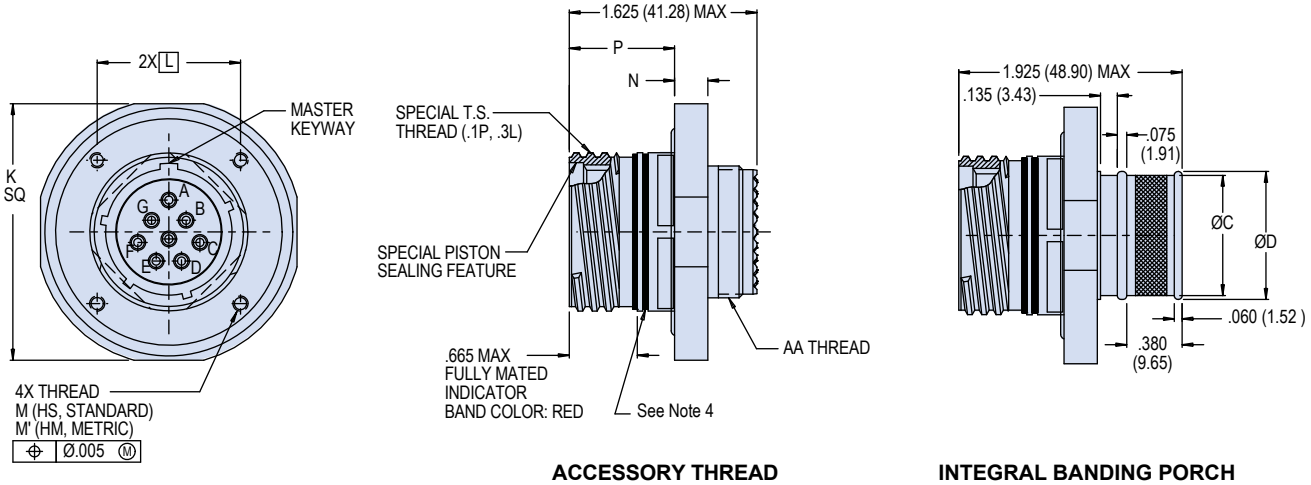

ACCESSORY THREAD
HS - STANDARD HELICOILS
HM - METRIC HELICOILS

INTEGRAL BANDING PORCH
BHS - STANDARD HELICOIL
BHM - METRIC HELICOIL

Wall Mount Dimensions							
Shell Size	K SQ	L BSC	M THD	M' THD	N	P	AA Thread
9	1.516 (38.51) 1.484 (37.69)	.719 (18.26)	#4-40 UNC-2B .225 (5.74) .220 (5.59)	M3-0.5 .225 (5.72) .220 (5.59)	.285 (7.24) .250 (6.35)	.968 (24.59) .913 (23.19)	M12 X 1.0 -6g 0.100R
11	1.642 (41.71) 1.610 (40.89)	.812 (20.62)					M15 X 1.0 -6g 0.100R
13	1.827 (46.41) 1.795 (45.59)	.906 (23.01)					M18 X 1.0 -6g 0.100R
15	1.953 (49.61) 1.921 (48.79)	.969 (24.61)					M22 X 1.0 -6g 0.100R
17	2.079 (52.81) 2.047 (51.99)	1.062 (26.97)					M25 X 1.0 -6g 0.100R
19	2.205 (56.01) 2.173 (55.19)	1.156 (29.36)					M28 X 1.0 -6g 0.100R
21	2.334 (59.28) 2.302 (58.47)	1.250 (31.75)				.936 (23.77) .881 (22.38)	M31 X 1.0 -6g 0.100R
23	2.522 (64.06) 2.490 (63.25)	1.375 (34.92)	#6-32 UNC-2B .275 (6.99) .270 (6.86)	M4X0.7 .275 (6.99) .270 (6.86)	.350 (8.89) .315 (8.00)		M34 X 1.0 -6g 0.100R
25	2.709 (68.81) 2.677 (68.00)	1.500 (38.10)					M37 X 1.0 -6g 0.100R

Integral Backshell Dimensions		
Shell Size	ØC	ØD
9	.475 (12.07)	.538 (13.67)
11	.600 (15.24)	.662 (16.81)
13	.700 (17.78)	.762 (19.35)
15	.835 (21.21)	.898 (22.81)
17	.960 (24.38)	1.022 (25.96)
19	1.062 (26.97)	1.125 (28.58)
21	1.188 (30.18)	1.250 (31.75)
23	1.275 (32.39)	1.338 (33.99)
25	1.475 (37.47)	1.538 (39.07)

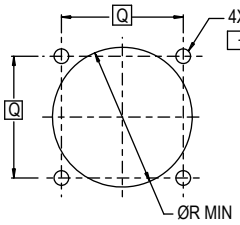

RECOMMENDED (BACK PANEL) MOUNTING HOLES FOR WALL MOUNT RECEPTACLES

Panel Cut Out Dims.			
Shell Size	Q BSC	ØR MIN	ØS HOLES
9	.719 (18.26)	.656 (16.66)	.133 (3.38) .123 (3.12)
11	.812 (20.62)	.796 (20.22)	
13	.906 (23.01)	.922 (23.42)	
15	.969 (24.61)	1.047 (26.59)	

Panel Cut Out Dims.			
Shell Size	Q BSC	ØR MIN	ØS HOLES
17	1.062 (26.97)	1.219 (30.96)	.133 (3.38) .123 (3.12)
19	1.156 (29.36)	1.297 (32.94)	
21	1.250 (31.75)	1.422 (36.12)	

Panel Cut Out Dims.			
Shell Size	Q BSC	ØR MIN	ØS HOLES
23	1.375 (34.92)	1.547 (39.29)	.159 (4.04) .149 (3.78)
25	1.500 (38.10)	1.672 (42.47)	.155 (3.94) .145 (3.68)

© 2022 Glenair, Inc • 1211 Air Way, Glendale, CA 91201 • 818-247-6000 • www.glenair.com • U.S. CAGE code 06324 • SuperNine® Catalog
Dimensions in Inches (millimeters) are subject to change without notice.

Rev. 06.19.24

SuperNine® Environmental Series

MIL-DTL-38999 Series III Type

233PS215 1K PSI wall-mount receptacle with panel seal

Part Number Development						
Sample Part Number	**233PS215**	**G6**	**NF**	**17-8**	**P**	**T**
Series / Basic Part No.	**233PS215 =** Improved panel sealing, Series 23 SuperNine with piston seal					
Connector Style*	**D0** = Wall mount receptacle with round holes					
Finish	**NF** = Al alloy/Cadmium Olive Drab **ME** = Al alloy/electroless Nickel **AB** = Marine Bronze/NA **MT** = Al alloy/Nickel PTFE **ZR** = Al alloy/Black Zinc Nickel **Z1** = SST, passivate					
Shell Size-Insert Arrangement*	Per MIL-STD-1560					
Contact Type	**P** = Pin, gold 1500 cycles **A** = Less pin contacts **H** = Pin, Pd/Ni 1500 cycles **S** = Socket, gold 1500 cycles **B** = Less socket ontacts **J** = Socket, Pd/Ni 1500 cycles					
Alternate Polarization	**V, W, X, Y, Z, T** = Normal (IAW MIL-DTL-38999 Series III); see key or keyway position tables					

***Refer to Section A for complete details**

Keyway Positions (Receptacle)				
Alternate Keyway Code	**A°**	**B°**	**C°**	**D°**
T	95	135	220	275
V	92	127	253	325
W	70	113	235	322
X	35	135	210	285
Y	54	150	239	314
Z	81	126	202	250

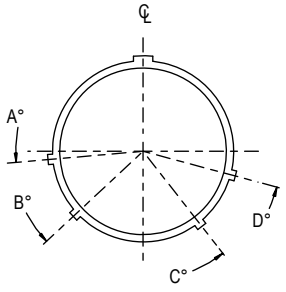

FACE VIEW - RECEPTACLE

Mounting Holes			
Shell Size	**B BSC**	**ØG**	**ØH Holes**
09	.719 (18.26)	.564 (14.33) .562 (14.27)	#4-40 0.150 MAX
11	.812 (20.62)	.689 (17.50) .687 (17.45)	
13	.906 (23.01)	.814 (20.68) .812 (20.62)	
15	.969 (24.61)	.939 (23.85) .937 (23.80)	
17	1.062 (26.97)	1.064 (27.03) 1.062 (26.97)	
19	1.156 (29.36)	1.189 (30.20) 1.187 (30.15)	
21	1.250 (31.75)	1.252 (31.80) 1.250 (31.75)	
23	1.375 (34.92)	1.377 (34.98) 1.375 (34.92)	#6-32 0.150 MAX
25	1.500 (38.10)	1.502 (38.15) 1.500 (38.10)	

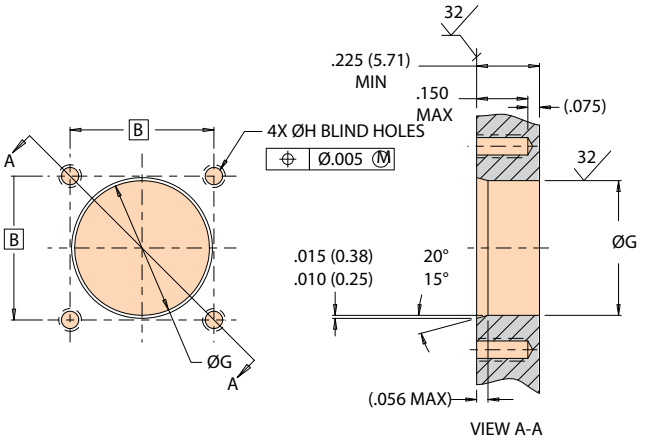

RECOMMENDED (FRONT PANEL) MOUNTING HOLES
FOR WALL MOUNT RECEPTACLES
(.225 MIN PANEL THICKNESS)

© 2022 Glenair, Inc • 1211 Air Way, Glendale, CA 91201 • 818-247-6000 • www.glenair.com • U.S. CAGE code 06324 • SuperNine® Catalog
Dimensions in Inches (millimeters) are subject to change without notice.

SuperNine® Environmental Series

MIL-DTL-38999 Series III Type

233PS215 1K PSI piston sealed wall-mount receptacle, panel sealed

PISTON SEALED WALL MOUNT RECEPTACLE WITH IMPROVED PANEL SEALING, AND CRIMP CONTACTS

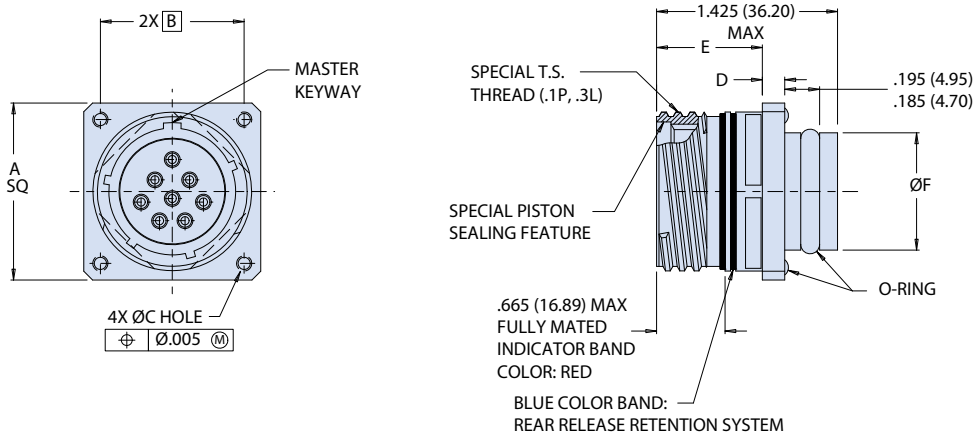

D0 - WALL MOUNT RECEPTACLE, WITH ROUND HOLES, FLAT BACK

NOTES

1. 233PS215 receptacle is designed to meet the general requirements of D38999/20 and MIL-STD-1560
   - Panel sealed wall mount receptacle requires special panel cutout.
   - Connector accessory threads accept standard backshells
   - Connector accepts standard AS39029 type contacts
   - Connectors cannot be mated to standard MIL-DTL-38999 plugs or protective covers
2. 233PS215 piston seal interface is rated to 1000 PSI water submersion (2300 FT/700m) when fully mated or protected with 239-200 cover. Cable sealing and panel sealing capability dependent on customer installation
3. Supplied with contacts (including spares) and insertion/removal tool.
4. Material/finish
   - Shell: see part number development
   - Insulator: high grade rigid dielectric/ N.A.
   - seals grommet: fluorosilicone blend/N/A.
   - Contacts: copper alloy/see part number development

Dimensions						
Shell Size	A SQ	B BSC	ØC	D	E	ØF
09	.949 (24.10) .925 (23.50)	.719 (18.26)	.136 (3.45) .120 (3.05)	.122 (3.10) .083 (2.11)	.968 (24.59) .913 (23.19)	.560 (14.22) .559 (14.20)
11	1.043 (26.49) 1.020 (25.91)	.812 (20.62)				.685 (17.40) .684 (17.37)
13	1.138 (28.91) 1.114 (28.30)	.906 (23.01)				.810 (20.57) .809 (20.55)
15	1.232 (31.29) 1.209 (30.71)	.969 (24.61)				.935 (23.75) .934 (23.72)
17	1.323 (33.60) 1.299 (32.99)	1.062 (26.97)				1.060 (26.92) 1.059 (26.90)
19	1.449 (36.80) 1.425 (36.20)	1.156 (29.36)				1.185 (30.10) 1.184 (30.07)
21	1.575 (40.00) 1.551 (39.40)	1.250 (31.75)				1.248 (31.70) 1.247 (31.67)
23	1.701 (43.21) 1.677 (42.60)	1.375 (34.92)	.162 (4.11) .146 (3.71)	.153 (3.89) .114 (2.90)	.936 (23.77) .881 (22.38)	1.373 (34.87) 1.372 (34.85)
25	1.823 (46.30) 1.799 (45.69)	1.500 (38.10)				1.498 (38.05) 1.497 (38.02)

© 2022 Glenair, Inc • 1211 Air Way, Glendale, CA 91201 • 818-247-6000 • www.glenair.com • U.S. CAGE code 06324 • SuperNine® Catalog
Dimensions in Inches (millimeters) are subject to change without notice.

ADVANCED PERFORMANCE

SuperNine® Environmental Series

MIL-DTL-38999 Series III Type

233-274 1K PSI crimp-contact piston-sealed connectors, fuel-resistant

Part Number Development									
Sample Part Number	**233-274**	**-**	**G6**	**NF**	**17**	**-**	**8**	**P**	**T**
Series / Basic Part No.	**233-274 =** Improved panel sealing, Series 23 SuperNine with piston seal								
Panel Mount Option	See Panel Mount Option Table								
Connector Style*	**G6** = Plug, EMI Spring, (D389999/26 Type) **05** = Receptacle In-Line **07** = Receptacle, Jam-Nut (D38999/24 Type) **HM** = Receptacle, Wall Mount with Metric Helicoils **HS** = Receptacle, Wall Mount with Standard Helicoils **D0** = Wall mount receptacle with round holes								
Finish	**NF** = Al alloy/cadmium olive drab **AB** = Marine bronze/N.A. **ZR** = Al alloy/black zinc nickel **ME** = Al alloy/electroless nickel **MT** = Al alloy/nickel PTFE **Z1** = SST, passivate								
Shell Size	**A** (9), **B** (11), **C** (13), **D** (15), **E** (17), **F** (19), **G** (21), **H** (23), **J** (25)								
Ground Option	**G** = Common Ground **-** (Dash) = None								
Insert Arrangements*	Per MIL-STD-1560								
Contact Type	**P** = Pin, gold over copper alloy **S** = Socket, gold over copper alloy **A** = Pin insert less contacts **B** = Socket insert less contacts **H** = Pin, Pd/Ni 1500 cycles **J** = Socket, Pd/Ni 1500 cycles								
Alternate Polarization	**V, W, X, Y, Z, T** = Normal (IAW MIL-DTL-38999 Series III); see key or keyway position tables								

***Refer to Section A for complete details**

Panel Mount Option	
Code	**Description**
-	Standard MIL-DTL- 38999 Panel Mount Configuration
PS	Improved Panel Sealing (Double O-Ring) Configuration; See 233PS274 Sales Drawing

Key Positions (Plug)				
Alternate Key Code	**A°**	**B°**	**C°**	**D°**
T	95	135	220	275
V	92	127	253	325
W	70	113	235	322
X	35	135	210	285
Y	54	150	239	314
Z	81	126	202	250

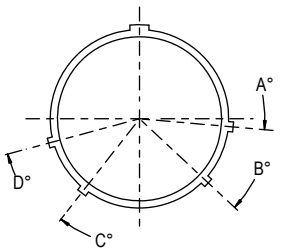

FACE VIEW - PLUG

Keyway Positions (Receptacle)				
Alternate Keyway Code	**A°**	**B°**	**C°**	**D°**
T	95	135	220	275
V	92	127	253	325
W	70	113	235	322
X	35	135	210	285
Y	54	150	239	314
Z	81	126	202	250

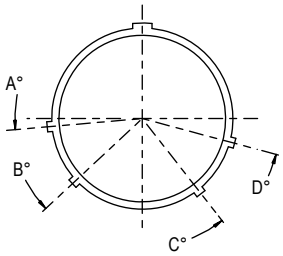

FACE VIEW - RECEPTACLE

© 2022 Glenair, Inc • 1211 Air Way, Glendale, CA 91201 • 818-247-6000 • www.glenair.com • U.S. CAGE code 06324 • SuperNine® Catalog
Dimensions in Inches (millimeters) are subject to change without notice.

SuperNine® Environmental Series

MIL-DTL-38999 Series III Type

233-274 1K PSI crimp-contact piston-sealed connectors, fuel-resistant

G6 AND BG6 - PISTON SEALED PLUG WITH CRIMP CONTACTS

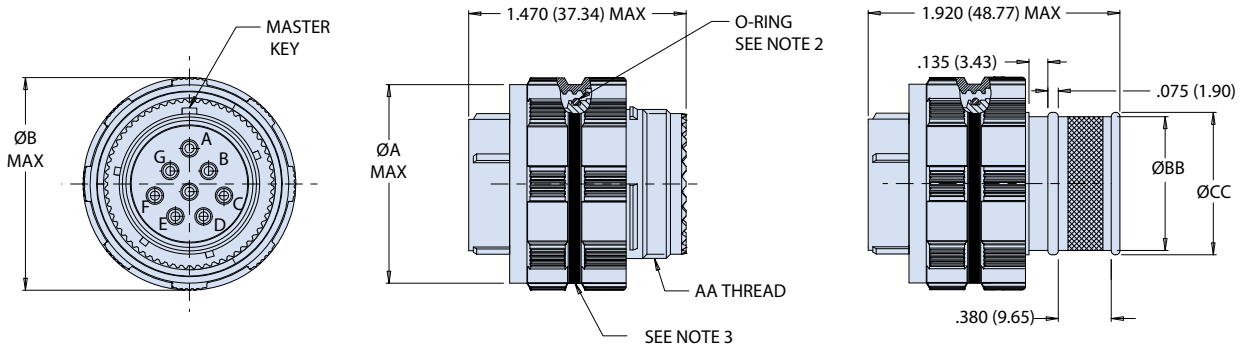

ACCESSORY THREAD G6

INTEGRAL BANDING PORCH BG6

Dimensions			
SHELL SIZE	øA MAX	øB MAX	AA THREAD
09	0.815	0.875	M12 X 1.0-6g 0.100R
11	0.928	0.988	M15 X 1.0-6g 0.100R
13	1.089	1.149	M18 X 1.0-6g 0.100R
15	1.214	1.274	M22 X 1.0-6g 0.100R
17	1.367	1.427	M25 X 1.0-6g 0.100R
19	1.464	1.524	M28 X 1.0-6g 0.100R
21	1.589	1.649	M31 X 1.0-6g 0.100R
23	1.714	1.774	M34 X 1.0-6g 0.100R
25	1.839	1.899	M37 X 1.0-6g 0.100R

Band Platform Dimenions			
SHELL SIZE CODE	SHELL SIZE	øBB	øCC
A	9	.420 (10.67)	.465 (11.81)
B	11	.550 (13.97)	.595 (15.11)
C	13	.670 (17.02)	.715 (18.16)
D	15	.815 (20.70)	.860 (21.84)
E	17	.945 (24.00)	.990 (25.15)
F	19	1.050 (26.67)	1.100 (27.94)
G	21	1.170 (29.72)	1.220 (30.99)
H	23	1.290 (32.77)	1.340 (34.04)
J	25	1.400 (35.56)	1.450 (36.83)

NOTES

1. 233-274 connectors are designed to meet the general requirements of D38999/20, /24, /26 and MIL-STD-1560
   - Glenair 233-274 receptacles can be installed into standard panel cutouts (Note: special panel cutouts requied for 233PS274 configuration)
   - Glenair 233-274-** connector accessory threads accept standard backshells
   - Gleanir 233-274 connectors accept standard AS39029 type contacts
   - glenair 233-274 connectors cannot be mated to standard MIL-DTL38999 connectors or protective covers
2. 233-274 is designed to meet requirements of fuel resistance per MIL-F-8615 and explosion proof test MIL-STD-810, Method 511.7, procedure 1 when full mated or protected with 239-200 dust cover. Cable sealing and panel sealing capability dependent on customer installation. For full performance specification and complete list of compatible fluids, see GT-20-XXXX.
3. Blue color band indicates rear release retention system.
4. Connector is supplied with contacts (including spares), insertion/removal tool, and sealing plugs where indicated in table III. Consult factory for crimp tools and/or accessory selection.
5. Ground plane option only available for insert arrangements where all contacts are shielded type and are ordered less contacts. for use with non-keyed shielded type contact only

© 2022 Glenair, Inc • 1211 Air Way, Glendale, CA 91201 • 818-247-6000 • www.glenair.com • U.S. CAGE code 06324 • SuperNine® Catalog
Dimensions in Inches (millimeters) are subject to change without notice.

Rev. 06.19.24

-07 AND B07 - JAM-NUT RECEPTACLE WITH ACCESSORY THREADS OR BANDING PORCH, CRIMP CONTACTS

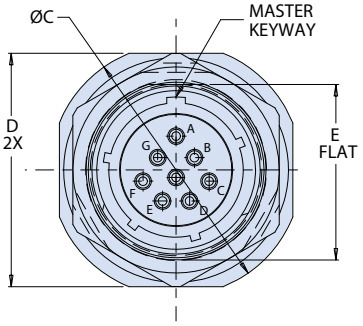

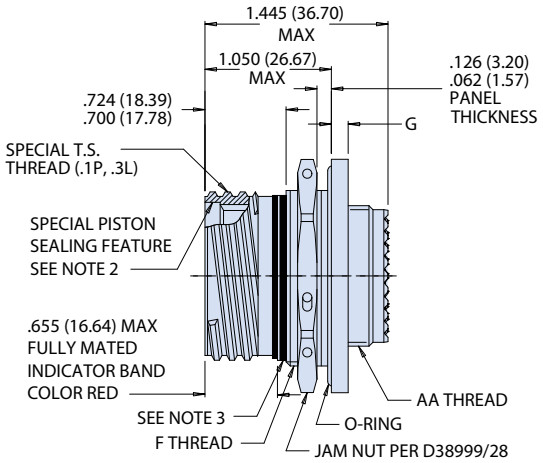

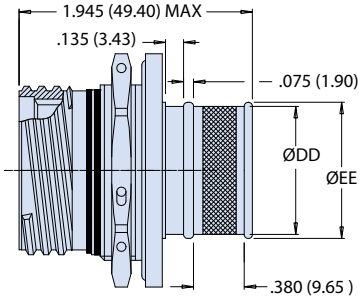

ACCESSORY THREAD
-07

INTEGRAL BANDING PORCH
B07

Dimensions						
SHELL SIZE	øC	D	E FLAT	F THREAD	AA THREAD	G
09	1.200 (30.48) 1.178 (29.92)	1.078 (27.38) 1.048 (26.62)	0.655 (16.64) 0.645 (16.38)	M17 X 1.0-6g 0.100R	M12 X 1.0-6g 0.100R	0.122 (3.10) 0.083 (2.11)
11	1.386 (35.20) 1.362 (34.59)	1.268 (32.21) 1.236 (31.39)	0.755 (19.18) 0.745 (18.92)	M20 X 1.0-6g 0.100R	M15 X 1.0-6g 0.100R	
13	1.512 (38.40) 1.488 (37.80)	1.390 (35.31) 1.358 (34.49)	0.942 (23.93) 0.932 (23.67)	M25 X 1.0-6g 0.100R	M18 X 1.0-6g 0.100R	
15	1.638 (41.61) 1.614 (41.00)	1.516 (38.51) 1.484 (37.69)	1.066 (27.08) 1.056 (26.82)	M28 X 1.0-6g 0.100R	M22 X 1.0-6g 0.100R	
17	1.764 (44.81) 1.740 (44.20)	1.642 (41.71) 1.610 (40.89)	1.191 (30.25) 1.181 (30.00)	M32 X 1.0-6g 0.100R	M25 X 1.0-6g 0.100R	
19	1.949 (49.50) 1.925 (48.90)	1.827 (46.41) 1.795 (45.59)	1.316 (33.43) 1.306 (33.17)	M35 X 1.0-6g 0.100R	M28 X 1.0-6g 0.100R	0.153 (3.89) 0.114 (2.90)
21	2.075 (52.71) 2.051 (52.10)	1.953 (49.61) 1.921 (48.79)	1.441 (36.60) 1.431 (36.35)	M38 X 1.0-6g 0.100R	M31 X 1.0-6g 0.100R	
23	2.201 (55.91) 2.177 (55.30)	2.079 (52.81) 2.047 (51.99)	1.566 (39.78) 1.556 (39.52)	M41 X 1.0-6g 0.100R	M34 X 1.0-6g 0.100R	
25	2.323 (59.00) 2.299 (58.39)	2.205 (56.01) 2.173 (55.19)	1.691 (42.95) 1.681 (42.70)	M44 X 1.0-6g 0.100R	M37 X 1.0-6g 0.100R	

Band Platform Dimenions			
SHELL SIZE CODE	SHELL SIZE	øDD	øEE
A	9	.475 (12.07)	.538 (13.67)
B	11	.600 (15.24)	.662 (16.81)
C	13	.700 (17.78)	.762 (19.35)
D	15	.835 (21.21)	.898 (22.81)
E	17	.960 (24.38)	1.022 (25.96)
F	19	1.062 (26.97)	1.125 (28.58)
G	21	1.188 (30.18)	1.250 (31.75)
H	23	1.275 (32.39)	1.338 (33.99)
J	25	1.475 (37.47)	1.538 (39.07)

Jam-Nut Panel Cut-Out Dimensions							
SHELL SIZE CODE	SHELL SIZE	K DIA ±.005	N	SHELL SIZE CODE	SHELL SIZE	K DIA ±.005	N
A	9	.698 (17.73)	.661 (16.79) .656 (16.66)	E	17	1.265 (32.13)	1.205 (30.61)
				F	19	1.390 (35.31)	1.330 (33.78)
B	11	.830 (21.08)	.766 (19.46)	G	21	1.515 (38.48)	1.455 (36.96)
C	13	1.015 (25.78)	.950 (24.13)	H	23	1.640 (41.66)	1.580 (40.13)
D	15	1.140 (28.96)	1.080 (27.43)	J	25	1.765 (44.83)	1.705 (43.31)

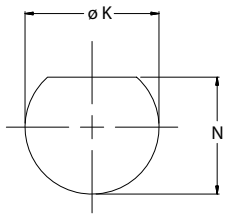

JAM-NUT
RECOMMENDED PANEL

© 2022 Glenair, Inc • 1211 Air Way, Glendale, CA 91201 • 818-247-6000 • www.glenair.com • U.S. CAGE code 06324 • SuperNine® Catalog
Dimensions in Inches (millimeters) are subject to change without notice.

SuperNine® Environmental Series

MIL-DTL-38999 Series III Type

233-274 1K PSI crimp-contact piston-sealed connectors, fuel-resistant

-HS AND -HM - WALL MOUNT RECEPTACLE WITH ACCESSORY THRDS OR BANDING PORCH, CRIMP CONTACTS

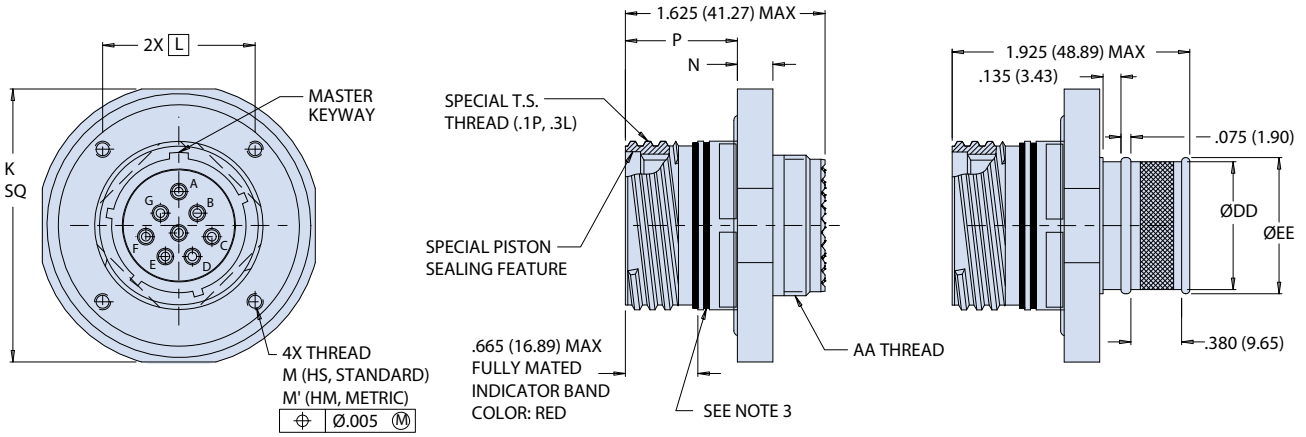

ACCESSORY THREAD -HS

INTEGRAL BANDING PORCH -HM

Dimensions							
SHELL SIZE	K SQ	L BSC	M THD	M' THD	N	P	AA THREAD
09	1.516 (38.51) 1.484 (37.69)	0.719 (18.26)	#4-40 UNC-2B ↧0.225 (5.72) 0.220 (5.59)	M3-0.5 ↧0.225 (5.72) 0.220 (5.59)	0.285 (7.24) 0.250 (6.35)	0.968 (24.59) 0.913 (23.19)	M12 X 1.0-6g 0.100R
11	1.642 (41.71) 1.610 (40.89)	0.812 (20.62)					M15 X 1.0-6g 0.100R
13	1.827 (46.41) 1.795 (45.59)	0.906 (23.01)					M18 X 1.0-6g 0.100R
15	1.953 (49.61) 1.921 (48.79)	0.969 (24.61)					M22 X 1.0-6g 0.100R
17	2.079 (52.81) 2.047 (51.99)	1.062 (26.97)					M25 X 1.0-6g 0.100R
19	2.205 (56.01) 2.173 (55.19)	1.156 (29.36)					M28 X 1.0-6g 0.100R
21	2.334 (59.28) 2.302 (58.47)	1.250 (31.75)				0.936 (23.77) 0.881 (22.38)	M31 X 1.0-6g 0.100R
23	2.522 (64.06) 2.490 (63.25)	1.375 (34.92)	#6-32 UNC-2B ↧0.275 (6.99) 0.270 (6.86)	M4X0.7 ↧0.275 (6.99) 0.270 (6.86)	0.350 (8.89) 0.315 (8.00)		M34 X 1.0-6g 0.100R
25	2.709 (68.81) 2.677 (68.00)	1.500 (38.10)					M37 X 1.0-6g 0.100R

Band Platform Dimenions			
SHELL SIZE CODE	SHELL SIZE	øDD	øEE
A	9	.475 (12.07)	.538 (13.67)
B	11	.600 (15.24)	.662 (16.81)
C	13	.700 (17.78)	.762 (19.35)
D	15	.835 (21.21)	.898 (22.81)
E	17	.960 (24.38)	1.022 (25.96)
F	19	1.062 (26.97)	1.125 (28.58)
G	21	1.188 (30.18)	1.250 (31.75)
H	23	1.275 (32.39)	1.338 (33.99)
J	25	1.475 (37.47)	1.538 (39.07)

Wall Mount Panel Cut-Out Dimensions							
SHELL SIZE	Q BSC	ØR MIN	ØS HOLES	SHELL SIZE	Q BSC	ØR MIN	ØS HOLES
09	0.719 (18.26)	0.656 (16.66)	0.133 (3.38) 0.123 (3.12)	19	1.156 (29.36)	1.297 (32.94)	0.133 (3.38) 0.123 (3.12)
11	0.812 (20.62)	0.796 (20.22)		21	1.250 (31.75)	1.422 (36.12)	
13	0.906 (23.01)	0.922 (23.42)		23	1.375 (34.92)	1.547 (39.29)	0.159 (4.04) 0.149 (3.78)
15	0.969 (24.61)	1.047 (26.59)		25	1.500 (38.10)	1.672 (42.47)	0.155 (3.94) 0.145 (3.68)
17	1.062 (26.97)	1.219 (30.96)					

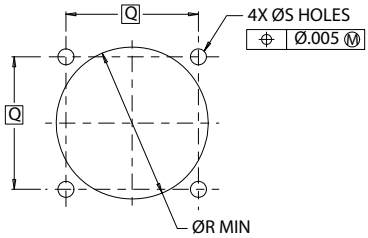

RECOMMENDED (BACK PANEL) MOUNTING HOLES FOR WALL MOUNT RECEPTACLES

© 2022 Glenair, Inc • 1211 Air Way, Glendale, CA 91201 • 818-247-6000 • www.glenair.com • U.S. CAGE code 06324 • SuperNine® Catalog
Dimensions in Inches (millimeters) are subject to change without notice.

Rev. 06.19.24

-05 AND B05 - IN-LINE RECEPTACLE WITH ACCESSORY THREADS OR BANDING PORCH, CRIMP CONTACTS

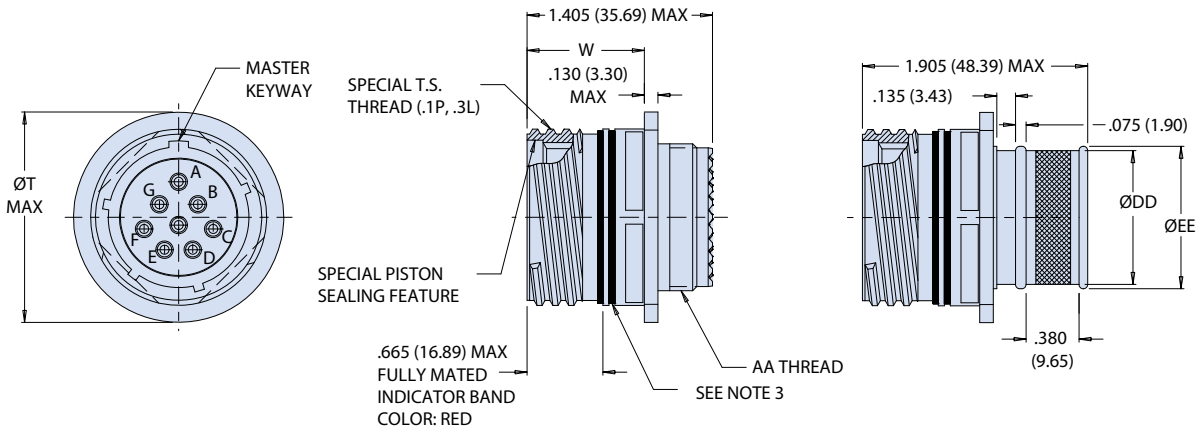

ACCESSORY THREAD -05 **INTEGRAL BANDING PORCH B05**

Dimensions			
Shell Size	ØT Max	W	AA Thread
09	0.858 (21.79)	0.965 (24.51) 0.916 (23.27)	M12 X 1.0-6g 0.100R
11	0.984 (24.99)		M15 X 1.0-6g 0.100R
13	1.157 (29.39)		M18 X 1.0-6g 0.100R
15	1.280 (32.51)		M22 X 1.0-6g 0.100R
17	1.406 (35.71)		M25 X 1.0-6g 0.100R
19	1.516 (38.51)	0.935 (23.75) 0.886 (22.50)	M28 X 1.0-6g 0.100R
21	1.642 (41.71)		M31 X 1.0-6g 0.100R
23	1.768 (44.91)		M34 X 1.0-6g 0.100R
25	1.890 (48.01)		M37 X 1.0-6g 0.100R

Band Platform Dimenions			
Shell Size Code	Shell Size	øDD	øEE
A	9	.475 (12.07)	.538 (13.67)
B	11	.600 (15.24)	.662 (16.81)
C	13	.700 (17.78)	.762 (19.35)
D	15	.835 (21.21)	.898 (22.81)
E	17	.960 (24.38)	1.022 (25.96)
F	19	1.062 (26.97)	1.125 (28.58)
G	21	1.188 (30.18)	1.250 (31.75)
H	23	1.275 (32.39)	1.338 (33.99)
J	25	1.475 (37.47)	1.538 (39.07)

© 2022 Glenair, Inc • 1211 Air Way, Glendale, CA 91201 • 818-247-6000 • www.glenair.com • U.S. CAGE code 06324 • SuperNine® Catalog
Dimensions in Inches (millimeters) are subject to change without notice.

SuperNine® Environmental connectors

MIL-DTL-38999 Series III type

233-393 USB 2.0 Memory Stick, 11 - 35 Arrangement



Part Number Development						
Sample Part Number	**233-393**	**NF**	**128**	**11**	**P**	**N**
Series / Basic Part No.	**233-393** = SuperNine Memory Stick					
Finish	**NF** = Al alloy/cadmium olive drab **ZR** = Al alloy/black zinc nickel **MT** = Al alloy/nickel PTFE **ME** = Al alloy/electroless nickel Consult factory for additional finish options					
Storage Capacity Options (SLC)	**64** = 64 GB **128** = 128 GB **256** = 256 GB					
Shell Size	**11** = Shell Size 11					
Contact Type	**P** = Pin **S** = Socket					
Alternate Polarization*	**A**, **B**, **C**, **D**, **E**, **N** = Normal (IAW MIL-DTL-38999 Series III)					

***Refer to Section A for complete details**

11-35 Arrangement, Pin Assignment		
Pin	**Name**	**Description**
1	(D+)	Data +
2	(V Bus)	+5V
3	NC	(Dummy)
4	NC	(Dummy)
5	NC	(Dummy)
6	(GND)	Ground
7	NC	(Dummy)
8	NC	(Dummy)
9	NC	(Dummy)
10	(D-)	Data -
11	NC	(Dummy)
12	NC	(Dummy)
13	NC	(Dummy)

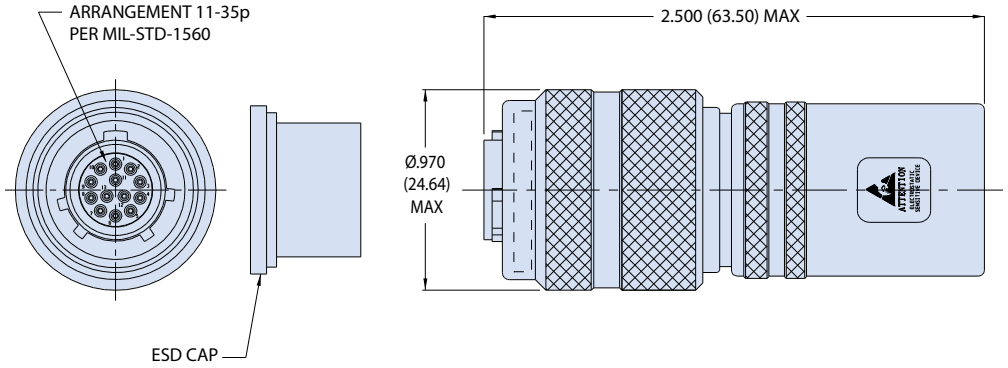

NOTES

1. Parts to be shipped with ESD caps (CEC-010) installed
2. USB memory specifications:
   - Storage capacity: 64 GB, 128 GB, 256 GB
   - Compatible with:
     - Windows 7, Vista, XP, 2000, ME, 98SE
     - Linux Kernel 2.4 and above
     - Mac OS 9.x and above
   - Interface: D38999, Series III
   - Data Transfer Rate: up to 480 Mb/sec.
   - Write protection and AES encryption at host level
   - MTBF: more than 2,000,000 hours (dependent on configuration and testing environment)
   - Data retention: 10 years
   - Environmental parameters:
     - Operating temperature 0°C to 70°C (MLC commercial)
   - Storage temperatures: -50°C to +85°C
   - Humidity: 5% to 95% non-condensing
3. Material and finish
   - Barrel, coupling nut, lockring: see how to order table
   - Insulators: high grade rigid dielectric/NA
   - EMI grounding spring: BeCu / electroless nickel plate

© 2022 Glenair, Inc • 1211 Air Way, Glendale, CA 91201 • 818-247-6000 • www.glenair.com • U.S. CAGE code 06324 • SuperNine® Catalog
Dimensions in Inches (millimeters) are subject to change without notice.

Rev. 06.19.24

ADVANCED PERFORMANCE

SuperNine® Environmental Series

MIL-DTL-38999 Series III Type

233-216 Lanyard-release plug

Part Number Development								
Sample Part Number	**233-216**	**-G6**	**ME**	**25-35**	**S**	**A**	**E**	**-4**
Series / Basic Part No.	**233-216** = Lanyard Release Plug							
Connector Style*	**G6** = Plug with EMI Spring							
Finish	**NF** = Aluminum Alloy, Olive Drab-Cad over Nickel **ZL** = CRES, Electrodeposited Nickel **Z1** = CRES, Passivated **ME** = Aluminum Alloy, Eletroless Nickel Consult factory for additional finish options							
Shell Size-Insert Arrangement*	Per MIL-STD-1560							
Contact Type	**P** = Pin **S** = Socket **A** = Pin Insert, Less Contact **B** = Socket Insert, Less Contact							
Alternate Key Position*	**A**, **B**, **C**, **D**, **E**, **N** = Normal (Per MIL-DTL-38999 Series III)							
Lanyard Length Code	See Lanyard Length Table							
Connector Type	**1** = Type 1 **4** = Type 4 **6** = Type 6							

***Refer to Section A for complete details**

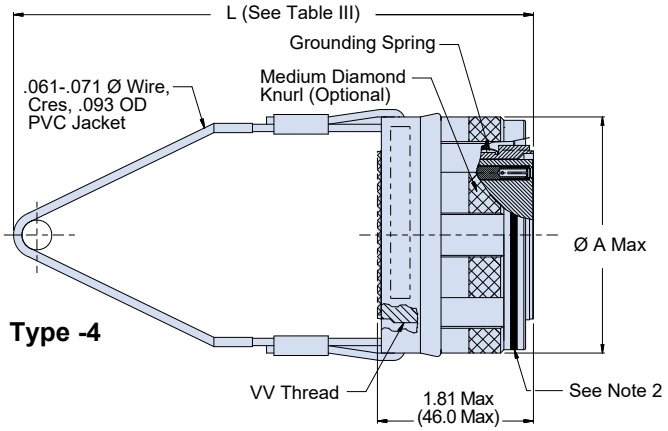

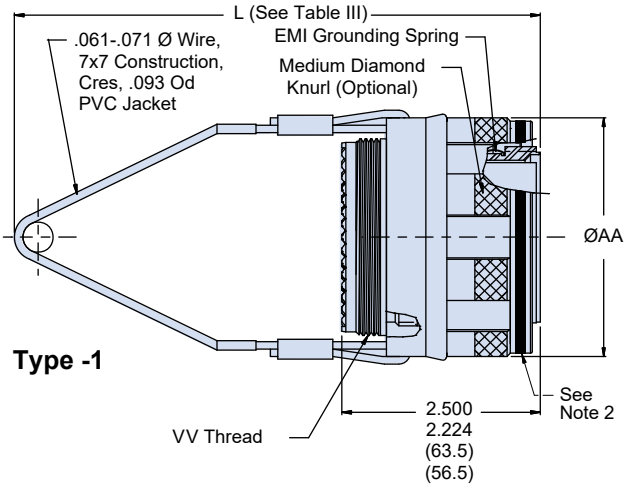

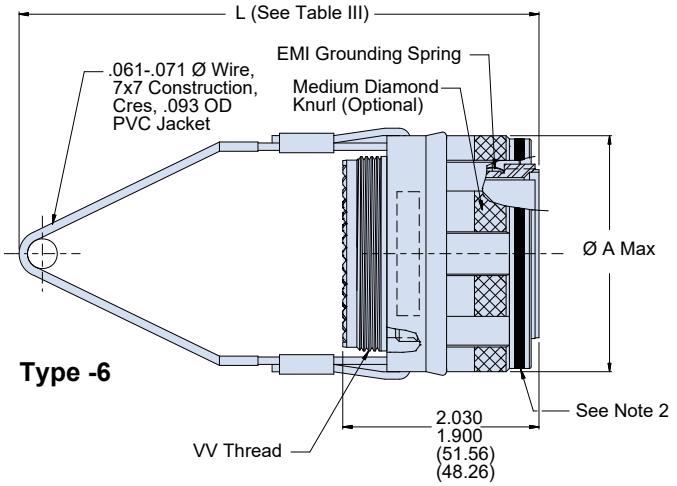

Insert arrangement is for reference only

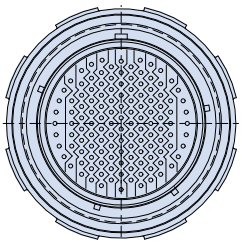

© 2022 Glenair, Inc • 1211 Air Way, Glendale, CA 91201 • 818-247-6000 • www.glenair.com • U.S. CAGE code 06324 • SuperNine® Catalog
Dimensions in Inches (millimeters) are subject to change without notice.

G6 - LANYARD RELEASE PLUG

Dimensions			
Shell Size	Shell Size Code	ØA ±.06	VV Thread
9*	A	Consult Factory	M12 x1-6g-0.100R
11	B	1.180 (29.97)	M15 x1-6g-0.100R
13	C	1.310 (33.27)	M18 x1-6g-0.100R
15	D	1.437 (36.50)	M22 x1-6g-0.100R
17	E	1.560 (39.62)	M25 x1-6g-0.100R
19	F	1.690 (42.93)	M28 x1-6g-0.100R
21	G	1.760 (44.70)	M31 x1-6g-0.100R
23	H	1.900 (48.26)	M34 x1-6g-0.100R
25	J	2.000 (50.80)	M37 x1-6g-0.100R

*Size #9 is only available in type -4

Separation Pull Forces Maximum		
Shell Size	Straight Pull Lbs. (Newton)	15 Degree Pull Lbs. (Newton)
9	44.96 (200)	55.08 (245)
11	44.96 (200)	55.08 (245)
13	44.96 (200)	55.08 (245)
15	44.96 (200)	55.08 (245)
17	89.92 (400)	100.04 (445)
19	89.92 (400)	100.04 (445)
21	89.92 (400)	100.04 (445)
23	89.92 (400)	100.04 (445)
25	89.92 (400)	100.04 (445)

Lanyard Length Code							
Code	L ± .236 (±6)	Code	L ± .236 (±6)	Code	L ± .236 (±6)	Code	L ± .236 (±6)
A	4.016(102)	G	7.007(178)	M	10.000(254)	U	13.031(331)
B	4.527(115)	H	7.519(191)	N	10.511(267)	V	14.015(356)
C	5.000(127)	I	7.992(203)	P	11.023(280)	W	15.000(381)
D	5.511(140)	J	8.503(216)	R	11.535(293)	X	16.023(407)
E	6.024(153)	K	9.015(229)	S	12.007(305)	Y	17.007(432)
F	6.535(166)	L	9.527(242)	T	12.519(318)	Z	18.031(458)

Supplied Components				
Contact Size	Contact Pin Part Number	Contact Socket Part Number	Sealing Plug Part Number	Insertion/Removal Tool Part Number
22D	M39029/58-360	M39029/56-348	M27488-22	M81969/14-01
20	M39029/58-363	M39029/56-351	M27488-20	M81969/14-10
16	M39029/58-364	M39029/56-352	M27488-16	M81969/14-03
12	M39029/58-365	M39029/56-353	M27488-12	M81969/14-04
12	M39029/102-558 Coax	M39029/103-559 Coax	M27488-12	M81969/14-04
8	M39029/60-367 Coax	M39029/59-366 Coax	M27488-8	M81969/14-06
8	M39029/90-529 Twinax	M39029/91-530 Twinax	M27488-8	M81969/14-06

NOTES

1. This connector mates with D38999/20, and 24.
2. Blue color band indicates rear release retention system.
3. Connectors to be supplied with contacts, insertion/removal tools and sealing plugs.
4. Commercial equivalent of D38999/31 type 1, 4, and 6. Test data available.
5. Material/finish
   - Barrel, coupling nut, lanyard ring: see part number development, finish
   - Ratchet ring, detent spring: stainless steel/passivated
   - Ground spring: BeCu alloy/electroless nickel
   - Wave spring: CRES/passivated
   - Insulator: high-grade rigid dielectric/N.A.
   - Seals, grommet: fluorosilicone blend/N.A.
   - Contacts: copper alloy

© 2022 Glenair, Inc • 1211 Air Way, Glendale, CA 91201 • 818-247-6000 • www.glenair.com • U.S. CAGE code 06324 • SuperNine® Catalog
Dimensions in Inches (millimeters) are subject to change without notice.

ADVANCED PERFORMANCE

SuperNine® Environmental Series

MIL-DTL-38999 Series III Type

233-207 PCB wall-mount receptacle with flush flange



Part Number Development						
Sample Part Number	**233-207**	**-00**	**NF**	**17-8**	**P**	**N**
Series / Basic Part No.	**233-207** = SuperNine PCB receptacle with flush flange					
Connector Style*	**00** = Wall mount receptacle with slotted holes **HM** = Wall mount receptacle with metric helicoils **HS** = Wall mount receptacle with standard helicoils Additional shell styles available in metric and standard, consult factory					
Finish	**NF** = Al alloy/cadmium Olive Drab **MT** = Al alloy/nickel PTFE **ME** = Al ally/Electroless Nickel **ZR** = Al alloy/Black Zinc Nickel Consult factory for additional finish options					
Shell Size-Insert Arrangement*	Per MIL-STD-1560					
Contact Type	**P** = Pin, Gold, 1500 cycles **S** = Socket, Gold, 1500 cycles **H** = Pin, Pd/Ni, 1500 cycles **J** = Socket, Pd/Ni, 1500 cycles					
Alternate Polarization*	**A**, **B**, **C**, **D**, **E**, **N** = Normal (IAW MIL-DTL-38999 Series III)					

***Refer to Section A for complete details**

00 - WALL MOUNT RECEPTACLE WITH SLOTTED HOLES

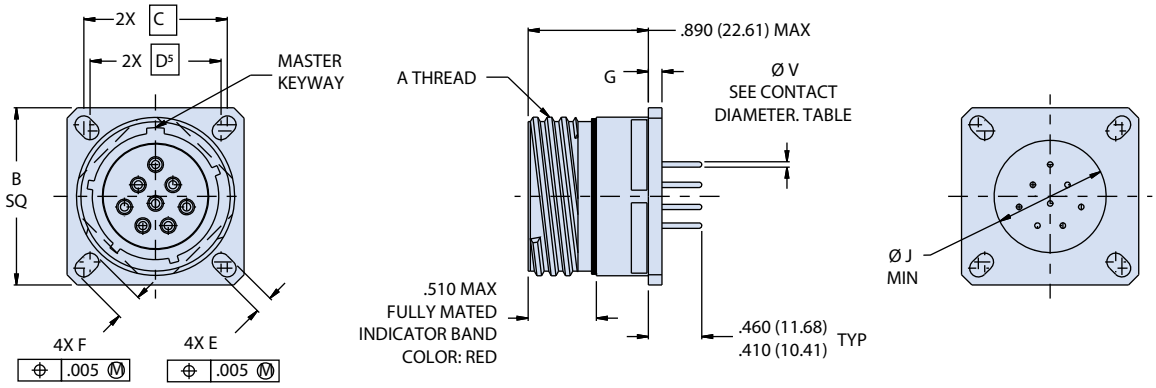

NOTES

1. 233-207 receptacle connector is designed to meet or exceed the mechanical, electrical, environmental and dimensional requirements of D38999/20 and MIL-STD-1560 except as shown and/or noted. Receptacle mates with any QPL manufacturer's D38999/26 Series III plug having the same shell size, insert arrangement and polarization.
2. Insert arrangements IAW MIL-STD-1560, contact manufacturer for additional arrangements.
3. 233-207 receptacle connector is designed with fixed PC tail contacts. Potting meets or exceeds ingress protection rating IP67 and is environmentally sealed with leak rate of < 1 x 10^-4 ccHe/sec in an unmated condition.
4. 233-207 receptacle connector is designed to withstand a minimum of 1500 mating durability cycles when mated to a SuperNine® plug and appropriate contacts. Contact finish should be the same for both mating connectors to optimize performance.
5. Front panel mount only
6. Material/finish
   - Shell: see part number development, finish
   - Insulator: high-grade rigid dielectric/N.A.
   - Seals: fluorosilicone blend/N.A.
   - Contacts: copper alloy
   - Potting: epoxy/N.A.

PC Tail Diameter	
Contact Size	**ØV**
23	.020 (.51) .018 (.46)
22	.020 (.51) .018 (.46)
20	.030 (.76) .028 (.71)
16	.040 (1.02) .038 (.97)
12	.072 (1.83) .070 (1.78)

© 2022 Glenair, Inc • 1211 Air Way, Glendale, CA 91201 • 818-247-6000 • www.glenair.com • U.S. CAGE code 06324 • SuperNine® Catalog
Dimensions in Inches (millimeters) are subject to change without notice.

Rev. 06.19.24

SuperNine® Environmental Series

MIL-DTL-38999 Series III Type

233-207 PCB wall-mount receptacle with flush flange

HS AND HM - WALL MOUNT RECEPTACLE WITH METRIC OR STANDARD MOUNTING HOLES

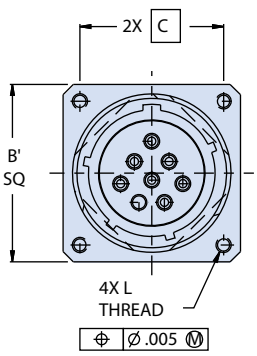

HS - STANDARD HELICOIL

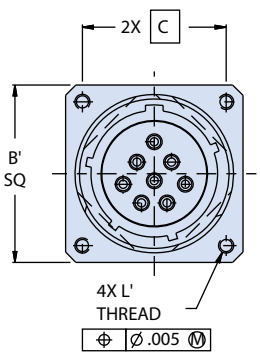

HM - METRIC HELICOILS

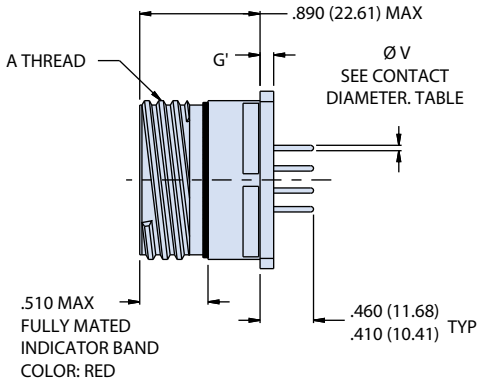

Wall Mount Dimensions													
Shell Size Code	Shell Size	A Thread -0.1P-0.3L-TS-2A	B Sq	B' Sq	C Bsc	D Bsc[5]	E	F	G	G'	ØJ Min	L Thd	L' Thd
A	9	.6250	.948 (24.08) .925 (23.50)	1.094 (27.79) 1.054 (26.77)	.719 (18.26)	.594 (15.09)	.136 (3.45) .120 (3.05)	.224 (5.69) .208 (5.28)	.122 (3.10) .083 (2.11)	.179 (4.55) .140 (3.56)	.340 (8.64)	.112-40 UNC	M3X0.5
B	11	.7500	1.043 (26.49) 1.019 (25.88)	1.187 (30.15) 1.147 (29.13)	.812 (20.62)	.719 (18.26)		.202 (5.13) .186 (4.72)			.468 (11.89)		
C	13	.8750	1.137 (28.88) 1.114 (28.30)	1.281 (32.54) 1.241 (31.52)	.906 (23.01)	.812 (20.62)					.572 (14.53)		
D	15	1.0000	1.232 (31.29) 1.208 (3.68)	1.344 (34.14) 1.304 (33.12)	.969 (24.61)	.906 (23.01)		.181 (4.60) .165 (4.19)			.705 (17.91)		
E	17	1.1875	1.323 (33.60) 1.299 (32.99)	1.437 (36.50) 1.397 (35.48)	1.062 (26.97)	.969 (24.61)					.830 (21.08)		
F	19	1.2500	1.449 (36.80) 1.425 (36.20)	1.531 (38.89) 1.491 (37.87)	1.156 (29.36)	1.062 (26.97)		.202 (5.13) .186 (4.72)	.153 (3.89) .114 (2.90)		.934 (23.72)		
G	21	1.3750	1.575 (40.00) 1.551 (39.40)	1.625 (41.28) 1.585 (40.26)	1.250 (31.75)	1.156 (29.36)					1.055 (26.80)		
H	23	1.5000	1.701 (43.21) 1.677 (42.60)	1.750 (44.45) 1.710 (43.43)	1.375 (34.92)	1.250 (31.75)	.162 (4.11) .146 (3.71)	.250 (6.35) .234 (5.94)		.190 (4.83) .170 (4.32)	1.160 (29.46)	.138-32 UNC	M4X0.7
J	25	1.6250	1.823 (46.30) 1.799 (45.69)	1.875 (47.63) 1.835 (46.61)	1.500 (38.10)	1.375 (34.92)					1.307 (33.20)		

© 2022 Glenair, Inc • 1211 Air Way, Glendale, CA 91201 • 818-247-6000 • www.glenair.com • U.S. CAGE code 06324 • SuperNine® Catalog
Dimensions in Inches (millimeters) are subject to change without notice.

SuperNine® Environmental Series

MIL-DTL-38999 Series III Type

233-207-07 PCB receptacle with flush flange

Part Number Development						
Sample Part Number	**233-207**	**-07**	**NF**	**17-8**	**P**	**N**
Series / Basic Part No.	**233-207** = SuperNine PCB receptacle with flush flange					
Connector Style*	**07** = Jam nut mount receptacle					
Finish	**NF** = Al alloy/cadmium Olive Drab **MT** = Al alloy/nickel PTFE **ME** = Al alloy/electroless Nickel **ZR** = Al alloy/black Zinc Nickel Consult factory for additional finish options					
Shell Size-Insert Arrangement*	Per MIL-STD-1560					
Contact Type	**P** = Pin, Gold, 1500 cycles **S** = Socket, Gold, 1500 cycles **H** = Pin, Pd/Ni, 1500 cycles **J** = Socket, Pd/Ni, 1500 cycles					
Alternate Polarization*	**A**, **B**, **C**, **D**, **E**, **N** = Normal (IAW MIL-DTL-38999 Series III)					

Contact Diameter	
Contact Size	**ØV**
23	.020 (.51) .018 (.46)
22	.020 (.51) .018 (.46)
20	.030 (.76) .028 (.71)
16	.040 (1.02) .038 (.97)
12	.072 (1.83) .070 (1.78)

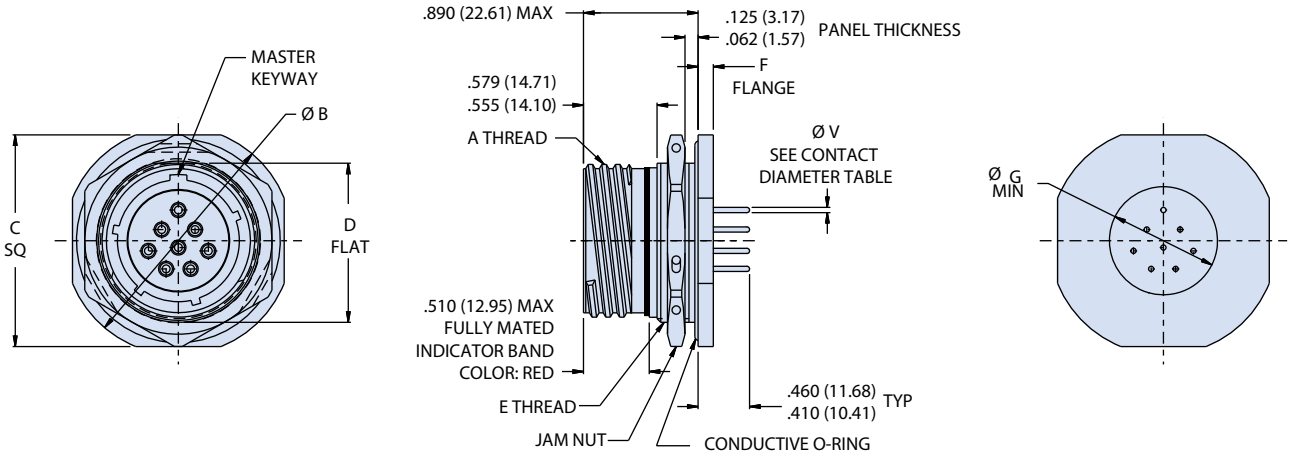

PC Tail Diameter	
Contact Size	**ØM**
23	.020 (.51) .018 (.46)
22	.020 (.51) .018 (.46)
20	.030 (.76) .028 (.71)
16	.040 (1.02) .038 (.97)
12	.072 (1.83) .070 (1.78)

© 2022 Glenair, Inc • 1211 Air Way, Glendale, CA 91201 • 818-247-6000 • www.glenair.com • U.S. CAGE code 06324 • SuperNine® Catalog
Dimensions in Inches (millimeters) are subject to change without notice.

SuperNine® Environmental Series

MIL-DTL-38999 Series III Type

233-207-07 PCB receptacle with flush flange

Jam Nut Dimensions										
Shell Size Code	Shell Size	A Thread -0.1P-0.3L-TS-2A	Ø B	C Sq	D Flat	E Thread ISO Metric	F	Ø G Min	Ø H	J Flat
A	9	.6250	1.200 (30.48) 1.178 (29.92)	1.078 (27.38) 1.048 (26.62)	.654 (16.61) .645 (16.38)	M17 X 1.0-6g	.122 (3.10) .083 (2.11)	.340 (8.64)	.703 (17.86) .693 (17.60)	.661 (16.79) .654 (16.61)
B	11	.7500	1.386 (35.20) 1.362 (34.59)	1.268 (32.21) 1.236 (31.39)	.755 (19.18) .745 (18.92)	M20 X 1.0-6g		.468 (11.89)	.835 (21.21) .825 (20.96)	.771 (19.58) .761 (19.33)
C	13	.8750	1.512 (38.40) 1.488 (37.80)	1.390 (35.31) 1.358 (34.49)	.942 (23.93) .932 (23.67)	M25 X 1.0-6g		.572 (14.53)	1.020 (25.91) 1.010 (25.65)	.955 (24.26) .945 (24.00)
D	15	1.0000	1.638 (41.61) 1.614 (41.00)	1.516 (38.51) 1.484 (37.69)	1.066 (27.08) 1.056 (26.82)	M28 X 1.0-6g		.705 (17.91)	1.145 (29.08) 1.135 (28.83)	1.085 (27.56) 1.075 (27.30)
E	17	1.1875	1.764 (44.81) 1.740 (44.20)	1.642 (41.71) 1.610 (40.89)	1.191 (30.25) 1.181 (30.00)	M32 X 1.0-6g*		.830 (21.08)	1.270 (32.26) 1.260 (32.00)	1.210 (30.73) 1.200 (30.48)
F	19	1.2500	1.949 (49.50) 1.925 (48.90)	1.827 (46.41) 1.795 (45.59)	1.316 (33.43) 1.306 (33.17)	M35 X 1.0-6g	.153 (3.89) .114 (2.90)	.934 (23.72)	1.395 (35.43) 1.385 (35.18)	1.335 (33.91) 1.325 (33.65)
G	21	1.3750	2.075 (52.71) 2.051 (52.10)	1.953 (49.61) 1.921 (48.79)	1.441 (36.60) 1.431 (36.35)	M38 X 1.0-6g		1.055 (26.80)	1.520 (38.61) 1.510 (38.35)	1.460 (37.08) 1.450 (36.83)
H	23	1.5000	2.201 (55.91) 2.177 (55.30)	2.079 (52.81) 2.047 (51.99)	1.566 (39.78) 1.556 (39.52)	M41 X 1.0-6g		1.160 (29.46)	1.645 (41.78) 1.635 (41.53)	1.585 (40.26) 1.575 (40.00)
J	25	1.6250	2.323 (59.00) 2.299 (58.39)	2.205 (56.01) 2.173 (55.19)	1.691 (42.95) 1.681 (42.70)	M44 X 1.0-6g		1.307 (33.20)	1.770 (44.96) 1.760 (44.70)	1.710 (43.43) 1.700 (43.18)

Modified major diameter 31.95 - 31.80 (.257 - 1.252)

NOTES

1. 233-207-07 receptacle connector is designed to withstand a minimum of 1500 mating durability cycles when mated to a SuperNine® plug and appropriate contacts. Contact finish should be the same for both mating connectors to optimize performance.
2. 233-207-07 receptacle connector is designed with fixed PC tail contacts. Connector potting process meets or exceeds ingress protection rating IP67 and is environmentally sealed with a leak rate of < 1 X 10^-4 ccHe/sec in unmated condition.
3. 233-207-07 receptacle connector is designed to meet or exceed the mechanical, electrical, environmental requirements of D38999/24 and MIL-STD-1560 except as shown and/or noted. Receptacle mates with any QPL manufacturer's D38999/26 Series III plug having same shell size, insert arrangement and polarization.
4. Insert arrangements IAW MIL-STD-1560, contact manufacturer for additional arrangement options.
5. Material/finish
   - Shell, jam-nut: see part number development, finish
   - Insulator: high-grade rigid dielectric/N.A.
   - Seals, grommet: fluorosilicone blend/N.A.
   - Potting: epoxy/N.A.
   - Contacts: copper alloy
   - O-ring: silver plated aluminum in fluorosilicone (cho-seal 1298 or equivalent)

© 2022 Glenair, Inc • 1211 Air Way, Glendale, CA 91201 • 818-247-6000 • www.glenair.com • U.S. CAGE code 06324 • SuperNine® Catalog
Dimensions in Inches (millimeters) are subject to change without notice.

ADVANCED PERFORMANCE

SuperNine® Environmental Series

MIL-DTL-38999 Series III Type

233-208 Sealed PCB receptacle with stepped contacts



Part Number Development						
Sample Part Number	**233-208**	**-00**	**NF**	**17-8**	**P**	**N**
Series / Basic Part No.	**233-208** = SuperNine sealed PCB receptacle with washout standoffs					
Connector Style*	**00** = Wall Mount Receptacle with Slotted Holes **CM** = Wall Mount Receptacle with Metric Clinch Nuts **CS** = Wall Mount Receptacle with Standard Clinch Nuts **HM** = Wall Mount Receptacle with Metric Helicoils **HS** = Wall Mount Receptacle with Standard Helicoils					
Finish	**NF** = Al alloy/Cadmium Olive Drab **MT** = Al alloy/Nickel PTFE **ME** = Al alloy/Electroless Nickel **ZR** = Al alloy/Black Zinc Nickel Consult factory for additional finish options					
Shell Size-Insert Arrangement*	Per MIL-STD-1560					
Contact Type	**P** = Pin, Gold, 1500 cycles **S** = Socket, Gold, 1500 cycles **H** = Pin, Pd/Ni, 1500 cycles **J** = Socket, Pd/Ni, 1500 cycles					
Alternate Polarization*	**A, B, C, D, E, N** = Normal (IAW MIL-DTL-38999 Series III)					

***Refer to Section A for complete details**

Wall Mount Receptacle Dimensions												
Shell Size Code	**Shell Size**	**A Thread -0.1P-0.3L-TS-2A**	**B Sq**	**B'**	**C Bsc**	**D Bsc[3]**	**E**	**F**	**G**	**G'**	**Ø J Min**	**L Thd**	**L' Thd**
A	9	.6250	.948 (24.08) .925 (23.50)	1.094 (27.79) 1.054 (26.77)	.719 (18.26)	.594 (15.09)	.136 (3.45) .120 (3.05)	.224 (5.69) .208 (5.28)	.122 (3.10) .083 (2.11)	.179 (4.55) .140 (3.56)	.340 (8.64)	.112-40 UNC	M3X0.5
B	11	.7500	1.043 (26.49) 1.019 (25.88)	1.187 (30.15) 1.147 (29.13)	.812 (20.62)	.719 (18.26)		.202 (5.13) .186 (4.72)			.468 (11.89)		
C	13	.8750	1.137 (28.88) 1.114 (28.30)	1.281 (32.54) 1.241 (31.52)	.906 (23.01)	.812 (20.62)					.572 (14.53)		
D	15	1.0000	1.232 (31.29) 1.208 (30.68)	1.344 (34.14) 1.304 (33.12)	.969 (24.61)	.906 (23.01)		.181 (4.60) .165 (4.19)			.705 (17.91)		
E	17	1.1875	1.323 (33.60) 1.299 (32.99)	1.437 (36.50) 1.397 (35.48)	1.062 (26.97)	.969 (24.61)					.830 (21.08)		
F	19	1.2500	1.449 (36.80) 1.425 (36.20)	1.531 (38.89) 1.491 (37.87)	1.156 (29.36)	1.062 (26.97)		.202 (5.13) .186 (4.72)	.153 (3.89) .114 (2.90)		.934 (23.72)		
G	21	1.3750	1.575 (40.00) 1.551 (39.40)	1.625 (41.28) 1.585 (40.26)	1.250 (31.75)	1.156 (29.36)					1.055 (26.80)		
H	23	1.5000	1.701 (43.21) 1.677 (42.60)	1.750 (44.45) 1.710 (43.43)	1.375 (34.92)	1.250 (31.75)	.162 (4.11) .146 (3.71)	.250 (6.35) .234 (5.94)		.190 (4.83) .170 (4.32)	1.160 (29.46)	.138-32 UNC	M4X0.7
J	25	1.6250	1.823 (46.30) 1.799 (45.69)	1.875 (47.63) 1.835 (46.61)	1.500 (38.10)	1.375 (34.92)					1.307 (33.20)		

NOTES

1. 233-208 receptacle connector is designed to meet or exceed the mechanical, electrical, environmental and dimensional requirements of D38999/20 or /24 and MIL-STD-1560 except as shown and/or noted. Receptacle mates with any QPL manufacturer's D38999/26 Series III plug having the same shell size, insert arrangement and polarization.
2. Insert arrangements IAW MIL-STD-1560, contact factory for additional arrangement options
3. Front panel mount only
4. 233-208 receptacle connector is designed with fixed PC tail contacts. Connector potting meets or exceeds protection rating IP67 and is environmentally sealed with a leak rake <1 X 10^-4 ccHe/sec in an unmated condition.
5. 233-208 receptacle connector is designed to withstand a minimum of 1500 mating durability cycles when mated to a SuperNine plug and appropriate contacts. Contact finish should be the same for both mating connectors to optimize performance.

© 2022 Glenair, Inc • 1211 Air Way, Glendale, CA 91201 • 818-247-6000 • www.glenair.com • U.S. CAGE code 06324 • SuperNine® Catalog
Dimensions in Inches (millimeters) are subject to change without notice.

Rev. 06.19.24

SuperNine® Environmental Series

MIL-DTL-38999 Series III Type

233-208 Sealed PCB receptacle with stepped contacts

00, CM, CS, HM AND HS - WALL MOUNT RECEPTACLES

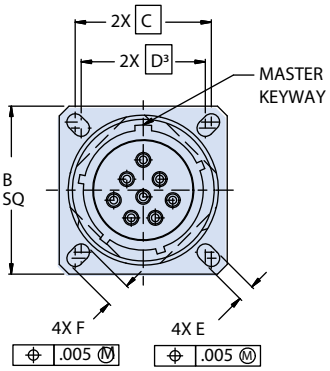

00 - SLOTTED HOLES

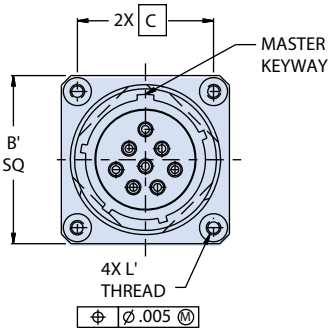

CM - METRIC CLINCH NUTS

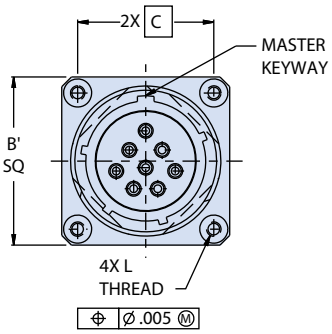

CS - STANDARD CLINCH NUTS

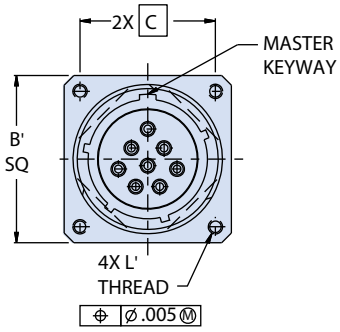

HM - METRIC HELICOILS

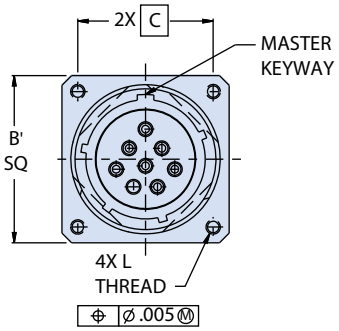

HS - STANDARD HELICOIL

PC Tail Diameter	
Contact Size	ØV
23	.020 (.51) .018 (.46)
22	.020 (.51) .018 (.46)
20	.030 (.76) .028 (.71)
16	.040 (1.02) .038 (.97)
12	.072 (1.83) .070 (1.78)

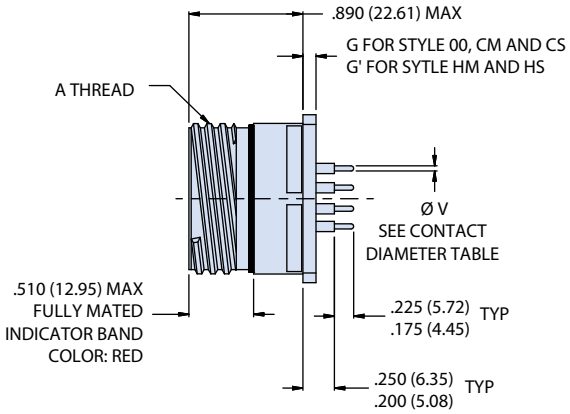

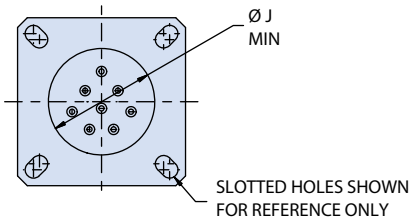

REAR VIEW - ONLY DIMENSIONS APPLY TO ALL SHELL STYLES

NOTES (CONTINUED)

6. Material/finish
   - Shell: see P/N development, finish
   - Contacts: copper alloy, see P/N development, contacts
   - insulators: high grade rigid dielectric/N.A.
   - Seals: fluorosilicone blend/N.A.
   - Potting: epoxy/N.A.

© 2022 Glenair, Inc • 1211 Air Way, Glendale, CA 91201 • 818-247-6000 • www.glenair.com • U.S. CAGE code 06324 • SuperNine® Catalog
Dimensions in Inches (millimeters) are subject to change without notice.

SuperNine® Environmental Series

MIL-DTL-38999 Series III Type

233-208-07 PCB jam nut receptacle with stepped contacts

Part Number Development						
Sample Part Number	**233-208**	**-00**	**NF**	**17-8**	**P**	**N**
Series / Basic Part No.	**233-208** = SuperNine PCB receptacle with stepped contacts					
Connector Style*	**07** = Jam Nut Mount Receptacle					
Finish	**NF** = Al alloy/cadmium Olive Drab **ME** = Al alloy/electroless Nickel **MT** = Al alloy/nickel PTFE **ZR** = Al alloy/black Zinc Nickel Consult factory for additional finish options					
Shell Size-Insert Arrangement*	Per MIL-STD-1560					
Contact Type	**P** = Pin, Gold, 1500 cycles **S** = Socket, Gold, 1500 cycles **H** = Pin, Pd/Ni, 1500 cycles **J** = Socket, Pd/Ni, 1500 cycles					
Alternate Polarization*	**A**, **B**, **C**, **D**, **E**, **N** = Normal (IAW MIL-DTL-38999 Series III)					

Jam Nut Receptacle Dimensions

Shell Size Code	Shell Size	A Thread -0.1P-0.3L-TS-2A	Ø B	C Sq	D Flat	E Thd ISO Meteric	F	Ø G Min	Ø H Max
A	9	.6250	1.200 (30.48) 1.178 (29.92)	1.078 (27.38) 1.048 (26.62)	.654 (16.61) .645 (16.38)	M17 X 1.0-6g	.122 (3.10) .083 (2.11)	.340 (8.64)	.470 (11.94)
B	11	.7500	1.386 (35.20) 1.362 (34.59)	1.268 (32.21) 1.236 (31.39)	.755 (19.18) .745 (18.92)	M20 X 1.0-6g		.468 (11.89)	.590 (14.99)
C	13	.8750	1.512 (38.40) 1.488 (37.80)	1.390 (35.31) 1.358 (34.49)	.942 (23.93) .932 (23.67)	M25 X 1.0-6g		.572 (14.53)	.708 (17.98)
D	15	1.0000	1.638 (41.61) 1.614 (41.00)	1.516 (38.51) 1.484 (37.69)	1.066 (27.08) 1.056 (26.82)	M28 X 1.0-6g		.705 (17.91)	.865 (21.97)
E	17	1.1875	1.764 (44.81) 1.740 (44.20)	1.642 (41.71) 1.610 (40.89)	1.191 (30.25) 1.181 (30.00)	M32 X 1.0-6g*		.830 (21.08)	.985 (25.02)
F	19	1.2500	1.949 (49.50) 1.925 (48.90)	1.827 (46.41) 1.795 (45.59)	1.316 (33.43) 1.306 (33.17)	M35 X 1.0-6g	.153 (3.89) .114 (2.90)	.934 (23.72)	1.105 (28.07)
G	21	1.3750	2.075 (52.71) 2.051 (52.10)	1.953 (49.61) 1.921 (48.79)	1.441 (36.60) 1.431 (36.35)	M38 X 1.0-6g		1.055 (26.80)	1.220 (30.99)
H	23	1.5000	2.201 (55.91) 2.177 (55.30)	2.079 (52.81) 2.047 (51.99)	1.566 (39.78) 1.556 (39.52)	M41 X 1.0-6g		1.160 (29.46)	1.340 (34.04)
J	25	1.6250	2.323 (59.00) 2.299 (58.39)	2.205 (56.01) 2.173 (55.19)	1.691 (42.95) 1.681 (42.70)	M44 X 1.0-6g		1.307 (33.20)	1.455 (36.96)

* Modified major diameter 31.95 - 31.80 (1.257 - 1.252)

© 2022 Glenair, Inc • 1211 Air Way, Glendale, CA 91201 • 818-247-6000 • www.glenair.com • U.S. CAGE code 06324 • SuperNine® Catalog
Dimensions in Inches (millimeters) are subject to change without notice.

SuperNine® Environmental Series

MIL-DTL-38999 Series III Type

233-208-07 PCB jam nut receptacles with stepped contacts

07 - JAM NUT MOUNT RECEPTACLE

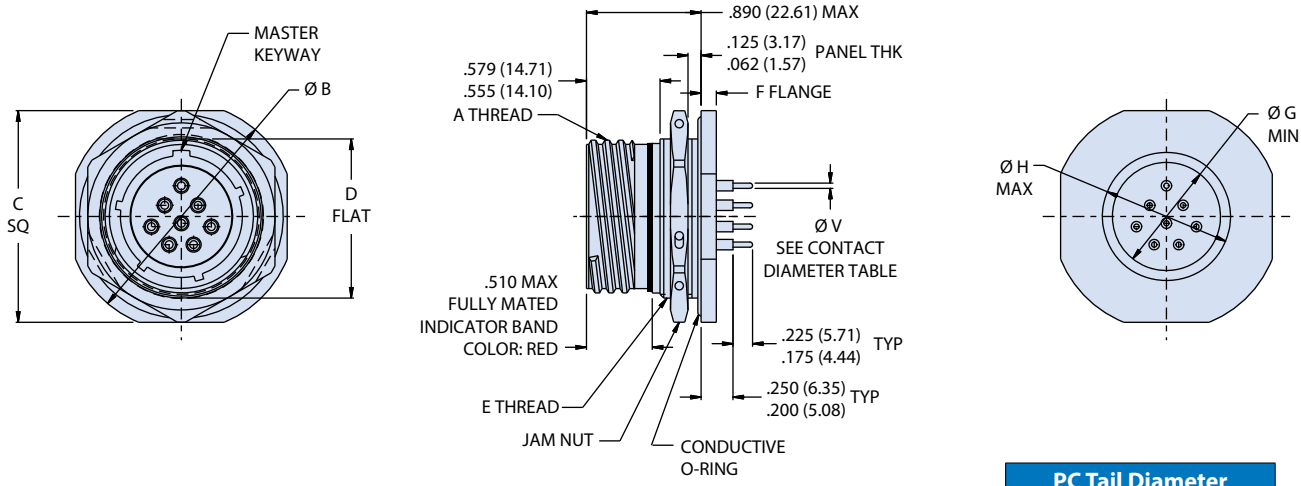

PC Tail Diameter	
Contact Size	ØV
23	.020 (.51) .018 (.46)
22	.020 (.51) .018 (.46)
20	.030 (.76) .028 (.71)
16	.040 (1.02) .038 (.97)
12	.072 (1.83) .070 (1.78)

NOTES

1. 233-208-07 receptacle connector is designed to withstand a minimum of 1500 mating durability cycles when mated to a SuperNine® plug and appropriate contacts. Contact finish should be the same for both mating connectors to optimize performance.
2. 233-208-07 receptacle connector is designed with fixed PC tail contacts. Connector Potting process meets or exceeds ingress protection rating IP67 and is environmentally sealed with a leak rate of < 1 X 10^-4 ccHe/sec in unmated condition.
3. 233-208-07 receptacle connector is designed to meet or exceed the mechanical, electrical, environmental requirements of D38999/24 and MIL-STD-1560 except as shown and/or noted. Receptacle mates with any QPL manufacturer's D38999/26, Series III plug having same shell size, insert arrangement and polarization.
4. Insert arrangements IAW MIL-STD-1560, contact manufacturer for additional arrangement options.
5. Material/finish
   - Shell, jam-nut: see part number development, finish
   - Contacts: copper alloy/see part number development, contact type
   - Insulators: high-grade rigid dielectric/N.A.
   - Seals: fluorosilicone blend/N.A.
   - Potting: epoxy/N.A.
   - O-ring: silver plated aluminum in fluorosilicone (cho-seal 1298 or equivalent)

© 2022 Glenair, Inc • 1211 Air Way, Glendale, CA 91201 • 818-247-6000 • www.glenair.com • U.S. CAGE code 06324 • SuperNine® Catalog
Dimensions in Inches (millimeters) are subject to change without notice.

ADVANCED PERFORMANCE

SuperNine® Environmental Series

MIL-DTL-38999 Series III Type

233-209 Sealed 1 x 10^{-4} PCB receptacle with washout standoffs



Part Number Development						
Sample Part Number	**233-209**	**-00**	**NF**	**17-8**	**P**	**N**
Series / Basic Part No.	**233-209** = SuperNine PCB receptacle with short standoff					
Connector Style*	**00** = Wall mount receptacle with slotted holes **HM** = Wall mount receptacle with metric helicoils **HS** = Wall mount receptacle with standard helicoils **CM** = Wall mount receptacle with metric clinch nuts **CS** = Wall mount receptacle with standard clinch nuts					
Finish	**NF** = Al alloy/cadmium olive drab **MT** = Al alloy/nickel PTFE **ME** = Al alloy/electroless nickel **ZR** = Al alloy/black zinc nickel Consult factory for additional finish options					
Shell Size-Insert Arrangement*	Per MIL-STD-1560					
Contact Type	**P** = Pin, Gold, 1500 cycles **S** = Socket, Gold, 1500 cycles **H** = Pin, Pd/Ni, 1500 cycles **J** = Socket, Pd/Ni, 1500 cycles					
Alternate Polarization*	**A**, **B**, **C**, **D**, **E**, **N** = Normal (IAW MIL-DTL-38999 Series III)					

***Refer to Section A for complete details**

Dimensions

Shell Size Code	Shell Size	A Thread -0.1P-0.3L-TS-2A	B Sq	B' Sq	C Bsc	D Bsc[5]	E	F	G	G'	ØH Min	ØJ Max	L Thd	L' Thd
A	9	.6250	.948 (24.08) .925 (23.50)	1.094 (27.79) 1.054 (26.77)	.719 (18.26)	.594 (15.09)	.136 (3.45) .120 (3.05)	.224 (5.69) .208 (5.28)	.122 (3.10) .083 (2.11)	.179 (4.55) .140 (3.56)	.340 (8.64)	.470 (11.94)	.112-40 UNC	M3X0.5
B	11	.7500	1.043 (26.49) 1.019 (25.88)	1.187 (30.15) 1.147 (29.13)	.812 (20.62)	.719 (18.26)		.202 (5.13) .186 (4.72)			.468 (11.89)	.590 (14.99)		
C	13	.8750	1.137 (28.88) 1.114 (28.30)	1.281 (32.54) 1.241 (31.52)	.906 (23.01)	.812 (20.62)					.572 (14.53)	.708 (17.98)		
D	15	1.0000	1.232 (31.29) 1.208 (30.68)	1.344 (34.14) 1.304 (33.12)	.969 (24.61)	.906 (23.01)		.181 (4.60) .165 (4.19)			.705 (17.91)	.865 (21.97)		
E	17	1.1875	1.323 (33.60) 1.299 (32.99)	1.437 (36.50) 1.397 (35.48)	1.062 (26.97)	.969 (24.61)					.830 (21.08)	.985 (25.02)		
F	19	1.2500	1.449 (36.80) 1.425 (36.20)	1.531 (38.89) 1.491 (37.87)	1.156 (29.36)	1.062 (26.97)		.202 (5.13) .186 (4.72)	.153 (3.89) .114 (2.90)		.934 (23.72)	1.105 (28.07)		
G	21	1.3750	1.575 (40.00) 1.551 (39.40)	1.625 (41.28) 1.585 (40.26)	1.250 (31.75)	1.156 (29.36)					1.055 (26.80)	1.220 (30.99)		
H	23	1.5000	1.701 (43.21) 1.677 (42.60)	1.750 (44.45) 1.710 (43.43)	1.375 (34.92)	1.250 (31.75)	.162 (4.11) .146 (3.71)	.250 (6.35) .234 (5.94)		.190 (4.83) .170 (4.32)	1.160 (29.46)	1.340 (34.04)	.138-32 UNC	M4X0.7
J	25	1.6250	1.823 (46.30) 1.799 (45.69)	1.875 (47.63) 1.835 (46.61)	1.500 (38.10)	1.375 (34.92)					1.307 (33.20)	1.455 (36.96)		

PC Tail Diameter	
Contact Size	**ØV**
23	.020 (.51) .018 (.46)
22	.020 (.51) .018 (.46)
20	.030 (.76) .028 (.71)
16	.040 (1.02) .038 (.97)
12	.072 (1.83) .070 (1.78)

© 2022 Glenair, Inc • 1211 Air Way, Glendale, CA 91201 • 818-247-6000 • www.glenair.com • U.S. CAGE code 06324 • SuperNine® Catalog
Dimensions in Inches (millimeters) are subject to change without notice.

Rev. 06.19.24

SuperNine® Environmental Series

MIL-DTL-38999 Series III Type

233-209 Sealed 1 x 10^{-4} PCB receptacle with washout standoffs

00, CM, CS, HM AND HS - WALL MOUNT RECEPTACLES

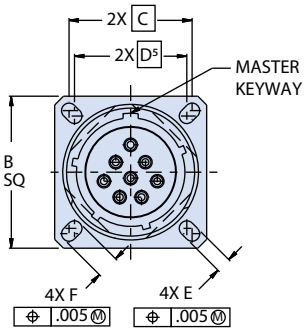

00 - SLOTTED HOLES

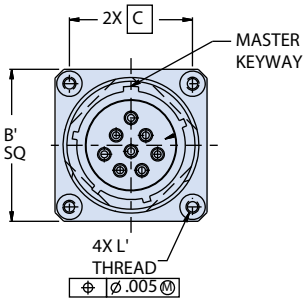

CM - METRIC CLINCH NUTS

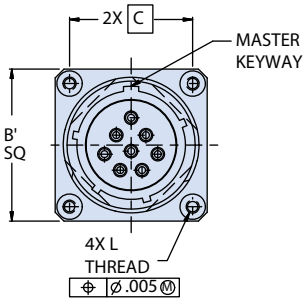

CS - STANDARD CLINCH NUTS

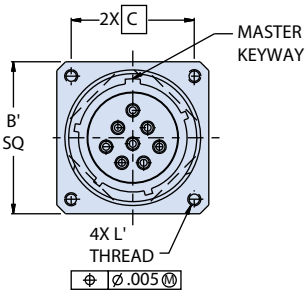

HM - METRIC HELICOILS

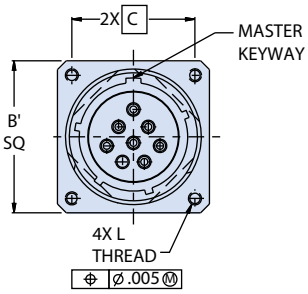

HS - STANDARD HELICOILS

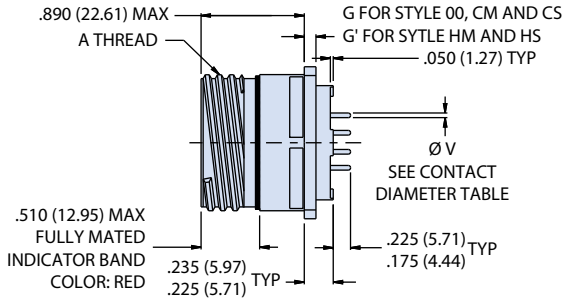

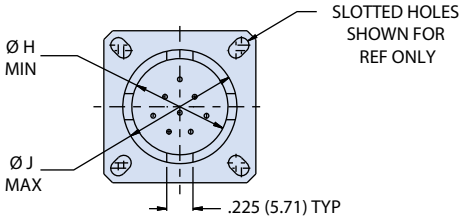

REAR VIEW
DIMENSIONS APPLY TO ALL SHELL STYLES

NOTES

1. 233-209 receptacle connector is designed to meet or exceed the mechanical, electrical, environmental and dimensional requirements of D38999/20 and MIL-STD-1560 except as shown and/or noted.
2. 233-209 receptacle connector mates with any QPL manufacturer's D38999/26 series III plug having the same shell size, insert arrangement and polarization.
3. Insert arrangements IAW MIL-STD-1560. Contact factory for additional arrangement options
4. 233-209 receptacle connector is designed with fixed PC tail contacts. Potting meets or exceeds ingress protection rating IP67 and is environmentally sealed to a leak rate of <1 x 10 ^-4 ccHe/Sec in an unmated condition.
5. Front panel mount only
6. Material/finish
   - Shell size: see part number development, finish
   - Contacts: copper alloy/see part number development, contact type
   - insulators: high grade rigid dielectric/N.A.
   - Seals: Fluorosilicone blend/N.A.
   - Potting: Epoxy/N.A.

© 2022 Glenair, Inc • 1211 Air Way, Glendale, CA 91201 • 818-247-6000 • www.glenair.com • U.S. CAGE code 06324 • SuperNine® Catalog
Dimensions in Inches (millimeters) are subject to change without notice.

ADVANCED PERFORMANCE

SuperNine® Environmental Series

MIL-DTL-38999 Series III Type

233-209-07 PCB jam nut receptacles with short standoff

Part Number Development						
Sample Part Number	**233-209**	**-07**	**NF**	**17-8**	**P**	**N**
Series / Basic Part No.	**233-209** = SuperNine PCB receptacle with short standoff					
Connector Style*	**07** = Jam Nut Mount Receptacle					
Finish	**NF** = Al alloy/cadmium Olive Drab **MT** = Al alloy/nickel PTFE **ME** = Al alloy/electroless Nickel **ZR** = Al alloy/black zinc Nickel Consult factory for additional finish options					
Shell Size-Insert Arrangement*	Per MIL-STD-1560					
Contact Type	**P** = Pin, Gold, 1500 cycles **S** = Socket, Gold, 1500 cycles **H** = Pin, Pd/Ni, 1500 cycles **J** = Socket, Pd/Ni, 1500 cycles					
Alternate Polarization*	**A**, **B**, **C**, **D**, **E**, **N** = Normal (IAW MIL-DTL-38999 Series III)					

***Refer to Section A for complete details**

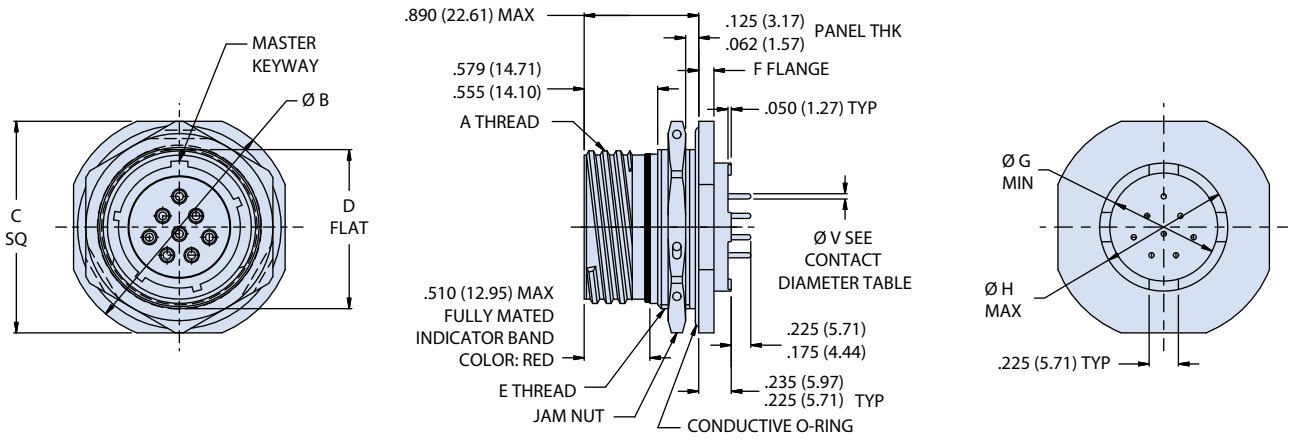

PC Tail Diameter	
Contact Size	**ØV**
23	.020 (.51) .018 (.46)
22	.020 (.51) .018 (.46)
20	.030 (.76) .028 (.71)
16	.040 (1.02) .038 (.97)
12	.072 (1.83) .070 (1.78)

© 2022 Glenair, Inc • 1211 Air Way, Glendale, CA 91201 • 818-247-6000 • www.glenair.com • U.S. CAGE code 06324 • SuperNine® Catalog
Dimensions in Inches (millimeters) are subject to change without notice.

SuperNine® Environmental Series

MIL-DTL-38999 Series III Type

233-209-07 PCB jam nut receptacles with short standoff

Dimensions									
Shell Size Coce	Shell Size	A Thread	Ø B	C Sq	D Flat	E Thread ISO Metric	F	Ø G Min	Ø H Max
A	9	.6250 -0.1P-0.3L-TS-2A	1.200 (30.48) 1.178 (29.92)	1.078 (27.38) 1.048 (26.62)	.654 (16.61) .645 (16.38)	M17 X 1.0-6g	.122 (3.10) .083 (2.11)	.340 (8.64)	.470 (11.94)
B	11	.7500 -0.1P-0.3L-TS-2A	1.386 (35.20) 1.362 (34.59)	1.268 (32.21) 1.236 (31.39)	.755 (19.18) .745 (18.92)	M20 X 1.0-6g		.468 (11.89)	.590 (14.99)
C	13	.8750 -0.1P-0.3L-TS-2A	1.512 (38.40) 1.488 (37.80)	1.390 (35.31) 1.358 (34.49)	.942 (23.93) .932 (23.67)	M25 X 1.0-6g		.572 (14.53)	.708 (17.98)
D	15	1.0000-0.1P-0.3L-TS-2A	1.638 (41.61) 1.614 (41.00)	1.516 (38.51) 1.484 (37.69)	1.066 (27.08) 1.056 (26.82)	M28 X 1.0-6g		.705 (17.91)	.865 (21.97)
E	17	1.1875 -0.1P-0.3L-TS-2A	1.764 (44.81) 1.740 (44.20)	1.642 (41.71) 1.610 (40.89)	1.191 (30.25) 1.181 (30.00)	M32 X 1.0-6g*		.830 (21.08)	.985 (25.02)
F	19	1.2500 -0.1P-0.3L-TS-2A	1.949 (49.50) 1.925 (48.90)	1.827 (46.41) 1.795 (45.59)	1.316 (33.43) 1.306 (33.17)	M35 X 1.0-6g	.153 (3.89) .114 (2.90)	.934 (23.72)	1.105 (28.07)
G	21	1.3750 -0.1P-0.3L-TS-2A	2.075 (52.71) 2.051 (52.10)	1.953 (49.61) 1.921 (48.79)	1.441 (36.60) 1.431 (36.35)	M38 X 1.0-6g		1.055 (26.80)	1.220 (30.99)
H	23	1.5000 -0.1P-0.3L-TS-2A	2.201 (55.91) 2.177 (55.30)	2.079 (52.81) 2.047 (51.99)	1.566 (39.78) 1.556 (39.52)	M41 X 1.0-6g		1.160 (29.46)	1.340 (34.04)
J	25	1.6250 -0.1P-0.3L-TS-2A	2.323 (59.00) 2.299 (58.39)	2.205 (56.01) 2.173 (55.19)	1.691 (42.95) 1.681 (42.70)	M44 X 1.0-6g		1.307 (33.20)	1.455 (36.96)

* Modified major diameter 31.95 - 31.80 (1.257 - 1.252)

NOTES

1. 233-209-07 receptacle connector is designed to withstand a minimum of 1500 mating durability cycles when mated to a SuperNine plug and appropriate contacts. Contact finish should be the same for both mating connectors to optimize performance.
2. 233-209-07 receptacle connector is designed with fixed PC tail contacts. Connector potting process meets or exceeds ingress protection rating IP67 and is environmentally sealed with a leak rate of < 1 X 10^-4 ccHe/sec in unmated condition.
3. 233-209-07 receptacle connector is designed to meet or exceed the mechanical, electrical, environmental requirements of D38999/24 and MIL-STD-1560 except as shown and/or noted. Receptacle mates with any QPL manufacturer's D38999/26, Series III plug having same shell size, insert arrangement and polarization.
4. Insert arrangements IAW MIL-STD-1560. Contact manufacturer for additional arrangement options.
5. Material/finish
   - Shell, jam-nut: see part number development, finish
   - Contacts: copper alloy/see part number development, contact type
   - Insulators: high-grade rigid dielectric/N.A.
   - Seals: fluorosilicone blend/N.A.
   - Potting: epoxy/N.A.
   - O-ring: silver plated aluminum in fluorosilicone (cho-seal 1298 or equivalent)

© 2022 Glenair, Inc • 1211 Air Way, Glendale, CA 91201 • 818-247-6000 • www.glenair.com • U.S. CAGE code 06324 • SuperNine® Catalog
Dimensions in Inches (millimeters) are subject to change without notice.

Rev. 06.19.24

ADVANCED PERFORMANCE

SuperNine® Environmental Series

MIL-DTL-38999 Series III Type

233-210 PCB wall-mount receptacles with threaded standoffs

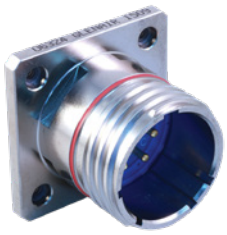

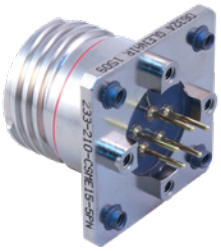

Part Number Development						
Sample Part Number	**233-210**	**-00**	**NF**	**17-8**	**P**	**N**
Series / Basic Part No.	**233-210** = SuperNine PCB receptacle with threaded standoffs					
Connector Style*	**00** = Wall Mount Receptacle with Slotted Holes, Standard Stand-off Thread **10** = Wall Mount Receptacle with Slotted Holes, Metric Stand-off Thread **CM** = Wall Mount Receptacle with Metric Clinch Nuts **CS** = Wall Mount Receptacle with Standard Clinch Nuts **HM** = Wall Mount Receptacle with Metric Helicoils **HS** = Wall Mount Receptacle with Standard Helicoils					
Finish	**NF** = Al alloy/cadmium olive drab **MT** = Al alloy/nickel PTFE **ME** = Al alloy/electroless nickel **ZR** = Al alloy/black zinc nickel Consult factory for additional finish options					
Shell Size-Insert Arrangement*	Per MIL-STD-1560					
Contact Type	**P** = Pin, Gold, 1500 cycles **S** = Socket, Gold, 1500 cycles **H** = Pin, Pd/Ni, 1500 cycles **J** = Socket, Pd/Ni, 1500 cycles					
Alternate Polarization*	**A, B, C, D, E, N** = Normal (IAW MIL-DTL-38999 Series III)					

***Refer to Section A for complete details**

Dimensions

Shell Size code	Shell Size	A Thd -0.1P-0.3L-TS-2A	B Sq	B' Sq	C Bsc	D Bsc³	E	F	G	G'	H Bsc	ØJ Min	L Thd	L' Thd
A	9	.6250	.948 (24.08) .925 (23.50)	1.094 (27.79) 1.054 (26.77)	.719 (18.26)	.594 (15.09)	.136 (3.45) .120 (3.05)	.224 (5.69) .208 (5.28)	.122 (3.10) .083 (2.11)	.179 (4.55) .140 (3.56)	.594 (15.09)	.340 (8.64)	.112-40 UNC	M3X0.5
B	11	.7500	1.043 (26.49) 1.019 (25.88)	1.187 (30.15) 1.147 (29.13)	.812 (20.62)	.719 (18.26)		.202 (5.13) .186 (4.72)			.719 (18.26)	.468 (11.89)		
C	13	.8750	1.137 (28.88) 1.114 (28.30)	1.281 (32.54) 1.241 (31.52)	.906 (23.01)	.812 (20.62)					.812 (20.62)	.572 (14.53)		
D	15	1.0000	1.232 (31.29) 1.208 (30.68)	1.344 (34.14) 1.304 (33.12)	.969 (24.61)	.906 (23.01)		.181 (4.60) .165 (4.19)			.906 (23.01)	.705 (17.91)		
E	17	1.1875	1.323 (33.60) 1.299 (32.99)	1.437 (36.50) 1.397 (35.48)	1.062 (26.97)	.969 (24.61)		.202 (5.13) .186 (4.72)			1.030 (26.16)	.830 (21.08)		
F	19	1.2500	1.449 (36.80) 1.425 (36.20)	1.531 (38.89) 1.491 (37.87)	1.156 (29.36)	1.062 (26.97)			.153 (3.89) .114 (2.90)		1.150 (29.21)	.934 (23.72)		
G	21	1.3750	1.575 (40.00) 1.551 (39.40)	1.625 (41.28) 1.585 (40.26)	1.250 (31.75)	1.156 (29.36)					1.221 (31.01)	1.055 (26.80)		
H	23	1.5000	1.701 (43.21) 1.677 (42.60)	1.750 (44.45) 1.710 (43.43)	1.375 (34.92)	1.250 (31.75)	.162 (4.11) .146 (3.71)	.250 (6.35) .234 (5.94)		.190 (4.83) .170 (4.32)	1.360 (34.54)	1.160 (29.46)	.138-32 UNC	M4X0.7
J	25	1.6250	1.823 (46.30) 1.799 (45.69)	1.875 (47.63) 1.835 (46.61)	1.500 (38.10)	1.375 (34.92)					1.475 (37.47)	1.307 (33.20)		

NOTES

1. 233-210 receptacle connector is designed to meet or exceed the mechanical, dimensional, electrical, environmental requirements of D38999/20 and MIL-STD-1560 except as shown and/or noted. Receptacle mates with 233-205/206 or any QPL manufacturer's D38999/26 Series III plug having the same shell size, insert arrangement and polarization.
2. Insert arrangements IAW MIL-STD-1560. Contact manufacturer for additional arrangement options
3. Front panel mount only
4. 233-210 receptacle connector is designed with fixed PC tail contacts. Connector potting process meets or exceeds ingress protection rating IP67 and is environmentally sealed with a leak rate of < 1 X 10^-4 ccHe/sec in an unmated condition.
5. 233-210 receptacle connector is designed to withstand a minimum of 1500 mating durability cycles when mated to a SuperNine® plug and appropriate contacts. Contact finish should be the same for both mating connectors to optimize performance.

© 2022 Glenair, Inc • 1211 Air Way, Glendale, CA 91201 • 818-247-6000 • www.glenair.com • U.S. CAGE code 06324 • SuperNine® Catalog
Dimensions in Inches (millimeters) are subject to change without notice.

Rev. 06.19.24

00, 10, CM, CS, HM AND HS - WALL MOUNT RECEPTACLES

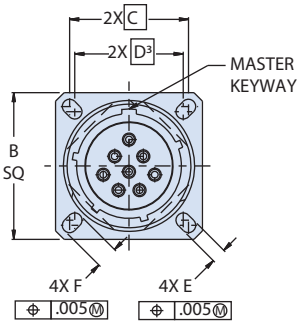

00 and 10 - SLOTTED HOLES

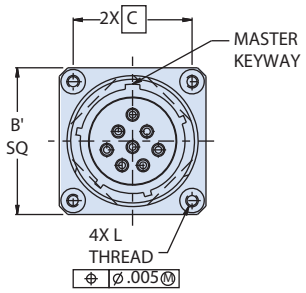

CS - STANDARD CLINCH NUTS

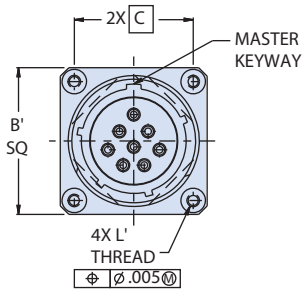

CM - METRIC CLINCH NUTS

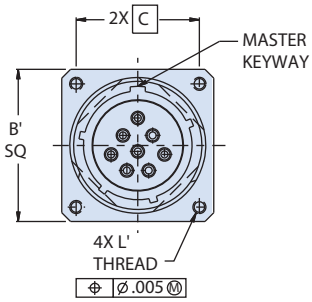

HM - METRIC HELICOILS

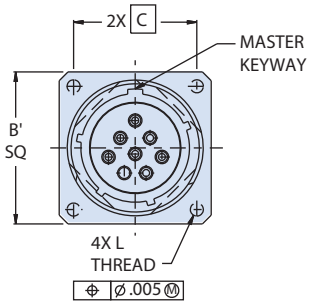

HS - STANDARD HELICOIL

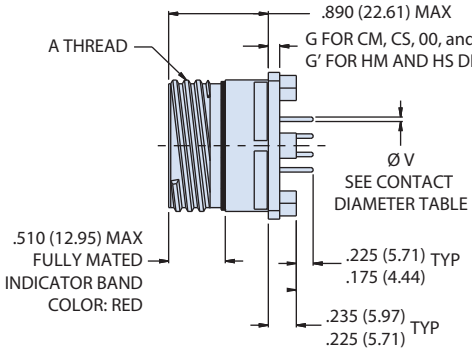

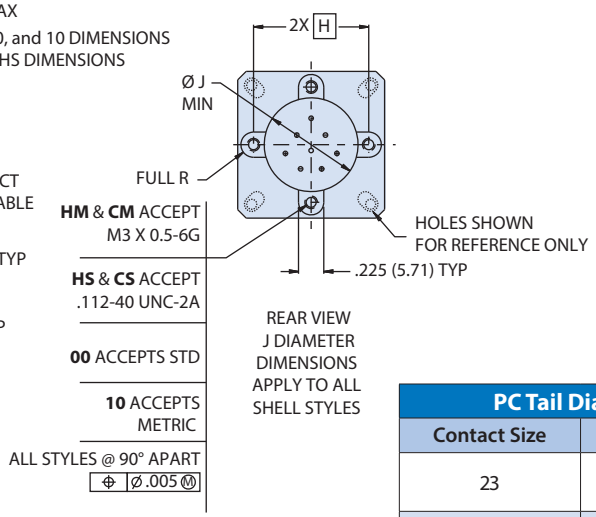

PC Tail Diameter	
Contact Size	ØV
23	.020 (.51) .018 (.46)
22	.020 (.51) .018 (.46)
20	.030 (.76) .028 (.71)
16	.040 (1.02) .038 (.97)
12	.072 (1.83) .070 (1.78)

NOTES (CONTINUED)

6. Material/finish
   - Shell, jam-nut: see part number development, finish
   - Contacts: copper alloy/see part number development, finish
   - Insulators: high grade rigid dielectric/ N.A.
   - Seals: fluorosilicone blend/N.A.
   - Potting: epoxy/N.A.

© 2022 Glenair, Inc • 1211 Air Way, Glendale, CA 91201 • 818-247-6000 • www.glenair.com • U.S. CAGE code 06324 • SuperNine® Catalog
Dimensions in Inches (millimeters) are subject to change without notice.

SuperNine® Environmental Series

MIL-DTL-38999 Series III Type

233-210-07 PCB jam nut receptacles with threaded standoffs

Part Number Development						
Sample Part Number	**233-210**	**-07**	**NF**	**17-8**	**P**	**N**
Series / Basic Part No.	**233-210** = SuperNine PCB receptacle with threaded standoffs					
Connector Style*	**07** = Jam-Nut Mount Receptacle with Standard Stand-off Thread **17** = Jam-Nut Mount Receptacle with Metric Stand-off Thread					
Finish	**NF** = Al alloy/cadmium olive drab **ME** = Al alloy/electroless nickel **MT** = Al alloy/nickel PTFE **ZR** = Al alloy/black zinc nickel Consult factory for additional finish options					
Shell Size-Insert Arrangement*	Per MIL-STD-1560					
Contact Type	**P** = Pin, Gold, 1500 cycles **S** = Socket, Gold, 1500 cycles **H** = Pin, Pd/Ni, 1500 cycles **J** = Socket, Pd/Ni, 1500 cycles					
Alternate Polarization*	**A**, **B**, **C**, **D**, **E**, **N** = Normal (IAW MIL-DTL-38999 Series III)					

Dimensions											
Shell Size Code	**Shell Size**	**A Thd -0.1P-0.3L-TS-2A**	**Ø B**	**C Sq**	**D Flat**	**E Thread ISO Metric**	**F**	**G Bsc**	**ØH Min**	**Threads**	
										M	**M'**
A	9	.6250	1.200 (30.48) 1.178 (29.92)	1.078 (27.38) 1.048 (26.62)	.654 (16.61) .645 (16.38)	M17 X 1.0-6g	.122 (3.10) .083 (2.11)	.594 (15.09)	.340 (8.64)	.112-40 UNC	M3 x .05
B	11	.7500	1.386 (35.20) 1.362 (34.59)	1.268 (32.21) 1.236 (31.39)	.755 (19.18) .745 (18.92)	M20 X 1.0-6g		.719 (18.26)	.468 (11.89)		
C	13	.8750	1.512 (38.40) 1.488 (37.80)	1.390 (35.31) 1.358 (34.49)	.942 (23.93) .932 (23.67)	M25 X 1.0-6g		.812 (20.62)	.572 (14.53)		
D	15	1.0000	1.638 (41.61) 1.614 (41.00)	1.516 (38.51) 1.484 (37.69)	1.066 (27.08) 1.056 (26.82)	M28 X 1.0-6g		.906 (23.01)	.705 (17.91)		
E	17	1.1875	1.764 (44.81) 1.740 (44.20)	1.642 (41.71) 1.610 (40.89)	1.191 (30.25) 1.181 (30.00)	M32 X 1.0-6g*		1.030 (26.16)	.830 (21.08)		
F	19	1.2500	1.949 (49.50) 1.925 (48.90)	1.827 (46.41) 1.795 (45.59)	1.316 (33.43) 1.306 (33.17)	M35 X 1.0-6g	.153 (3.89) .114 (2.90)	1.150 (29.21)	.934 (23.72)		
G	21	1.3750	2.075 (52.71) 2.051 (52.10)	1.953 (49.61) 1.921 (48.79)	1.441 (36.60) 1.431 (36.35)	M38 X 1.0-6g		1.221 (31.01)	1.055 (26.80)		
H	23	1.5000	2.201 (55.91) 2.177 (55.30)	2.079 (52.81) 2.047 (51.99)	1.566 (39.78) 1.556 (39.52)	M41 X 1.0-6g		1.360 (34.54)	1.160 (29.46)		
J	25	1.6250	2.323 (59.00) 2.299 (58.39)	2.205 (56.01) 2.173 (55.19)	1.691 (42.95) 1.681 (42.70)	M44 X 1.0-6g		1.475 (37.47)	1.307 (33.20)		

* Modified major diameter 31.95 - 31.80 (1.257 - 1.252).

© 2022 Glenair, Inc • 1211 Air Way, Glendale, CA 91201 • 818-247-6000 • www.glenair.com • U.S. CAGE code 06324 • SuperNine® Catalog
Dimensions in Inches (millimeters) are subject to change without notice.

SuperNine® Environmental Series

MIL-DTL-38999 Series III Type

233-210-07 PCB jam nut receptacles with threaded standoffs

07 - JAM-NUT MOUNT RECEPTACLE

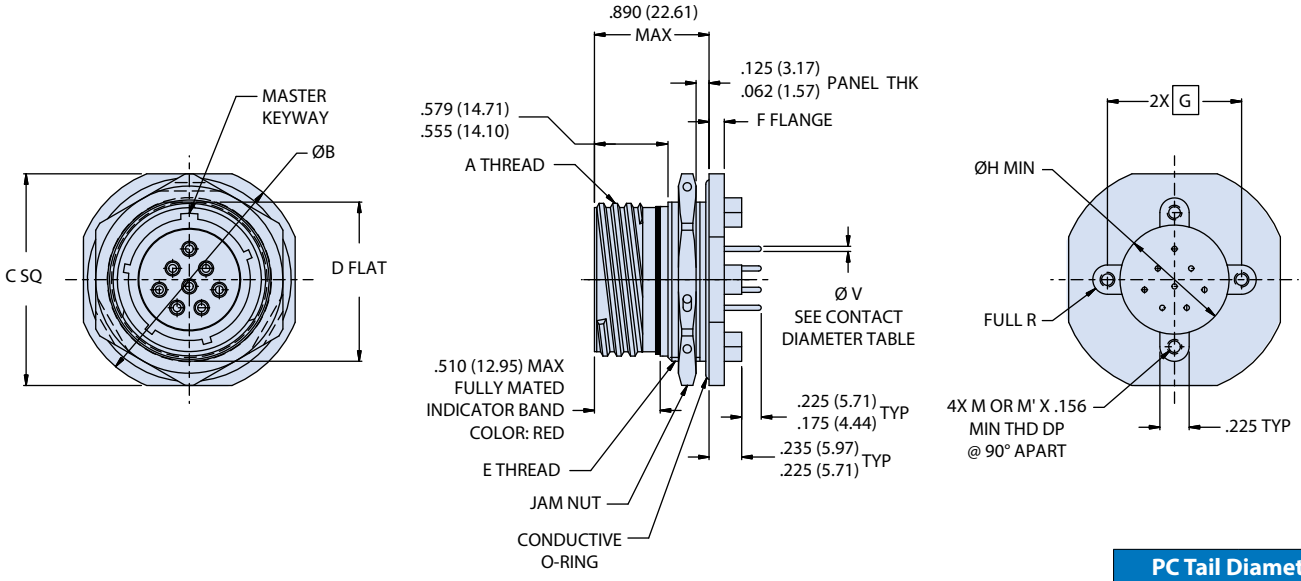

PC Tail Diameter	
Contact Size	ØV
23	.020 (.51) .018 (.46)
22	.020 (.51) .018 (.46)
20	.030 (.76) .028 (.71)
16	.040 (1.02) .038 (.97)
12	.072 (1.83) .070 (1.78)

NOTES

1. 233-210-07 receptacle connector is designed to withstand a minimum of 1500 mating durability cycles when mated to a "SuperNine" plug and appropriate contacts. Contact finish should be the same for both mating connectors to optimize performance.
2. 233-210-07 is designed to meet or exceed the mechanical, dimensional, electrical, environmental requirements of D38999/24 and MIL-STD-1560 except as shown and/or noted.
3. Receptacle mates with 233-205/206 or any QPL manufacturer's D38999/26 Series III plug having the same shell size, insert arrangement and polarization.
4. Insert arrangements IAW MIL-STD-1560.
5. Supplied with fixed PC tail contacts. Potting meets or exceeds IP67 in unmated condition.
6. Dimensions in Inches (millimeters) are subject to change without notice.
7. Consult factory for additional information.
8. Material/finish
   - Shell, lockring, jam-nut: see part number development, finish
   - Contacts: copper alloy/see part number development, contact type
   - Insulators: high-grade rigid dielectric/N.A.
   - Seals: fluorosilicone blend/N.A.
   - Potting: epoxy/N.A.
   - O-ring: silver plated aluminum in fluorosilicone (cho-seal 1298 or equivalent)

© 2022 Glenair, Inc • 1211 Air Way, Glendale, CA 91201 • 818-247-6000 • www.glenair.com • U.S. CAGE code 06324 • SuperNine® Catalog
Dimensions in Inches (millimeters) are subject to change without notice.

ADVANCED PERFORMANCE

SuperNine® Environmental Series

MIL-DTL-38999 Series III Type

233-292 PCB receptacle with thd standoffs and press fit contacts

Part Number Development						
Sample Part Number	**233-292**	**-07**	**NF**	**25-35**	**P**	**N**
Series / Basic Part No.	**233-292** = SuperNine PCB mount receptacle with press fit contacts					
Connector Style	**07** = Receptacle, Jam Nut, Standoff Std Thd **17** = Receptacle, Jam Nut, Standoff Metric Thd					
Material/Finish	See Material/Finish Table					
Shell Size-Insert Arrangement*	See Table I; Per MIL-STD-1560					
Contact Type	**P** = Pin, Gold, 500 Cycles **S** = Socket, Gold, 500 Cycle					
Alternate Polarization*	**A**, **B**, **C**, **D**, **E**, **N** = Normal (IAW MIL-DTL-38999 Series III)					

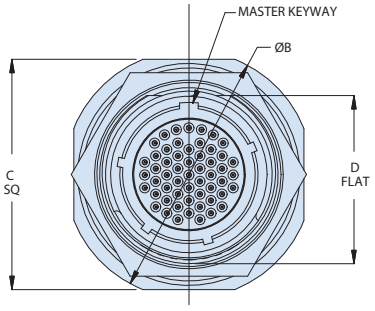

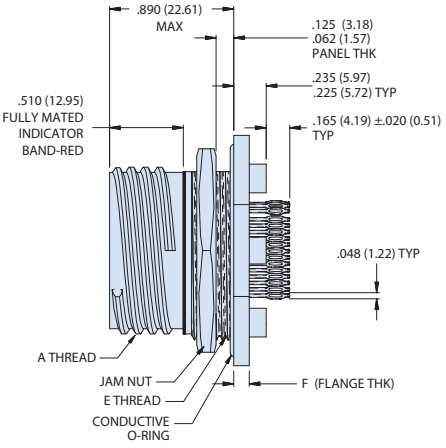

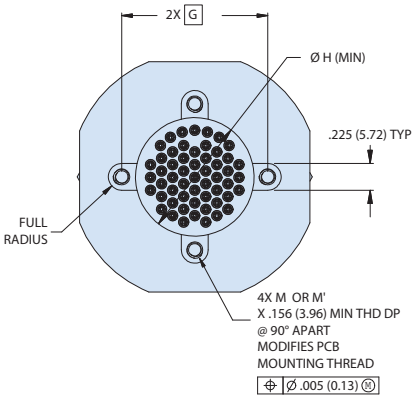

Material/Finish		
SYM	**Material**	**Finish**
NF	Aluminum Alloy	Cad/O.d. Over Electroless Nickel
MA		Electroless Nickel, Matte
ME		Electroless Nickel
MT		Nickel-Ptfe
ZN		Zinc-Nickel Olive Drab
ZR		Zinc Ni, Black (Tri-Valent Cr)
TZ		Tin-Zinc
TD	Titanium	Natural - No Plate
Z1	Stainless Steel	Passivate
ZL		Electrodeposited Nickel
AB	Marine Bronze	None (Clean Only)

NOTES:

1. Material/ finish:
   - Shell, lockring, jam nut - See Table III
   - CONTACTS - copper alloy / see table V
   - Insulators - high grade rigid dielectric / N.A.
   - Seals - fluorosilicone blend / N.A.
   - Potting - epoxy / N.A.
   - O-ring - silver plated aluminum in fluorosilicone (CHO-SEAL 1298 or equivalent)
2. GLENAIR'S 233-292 receptacle connector is designed to meet or exceed the mechanical, dimensional, electrical, and environmental requirements of MIL-DTL-38999, D38999/24, and MIL-STD-1560 except as shown and/or noted. receptacle mates with any QPL manufacturer's MIL-DTL-38999, Series III plug connector, D38999/26, having the same shell size, insert arrangement, and polarization.
3. Glenair's 233-292 receptacle connector is designed to withstand a maximum of 500 mating durability cycles when mated to a "SuperNine" plug and appropriate contacts. Contact finish should be the same for both mating connectors to optimize performance.
4. Press fit contact designed for use with .040±.003 plated thru hole.

© 2022 Glenair, Inc • 1211 Air Way, Glendale, CA 91201 • 818-247-6000 • www.glenair.com • U.S. CAGE code 06324 • SuperNine® Catalog
Dimensions in Inches (millimeters) are subject to change without notice.

Rev. 05.17.23

SuperNine® Environmental Series

MIL-DTL-38999 Series III Type

233-292 PCB receptacle with thd standoffs and press fit contacts

Dimensions												
Shell Size Code	Shell Size	A Thread	Ø B	C SQ	D Flat	E Thread ISO Metric	F	G BSC	Ø H Min	Threads M	Threads M'	Insert Arrangement
A	9	.6250 -0.1P-0.3L-TS-2A	1.200 (30.48) 1.178 (29.92)	1.078 (27.38) 1.048 (26.62)	.654 (16.61) .645 (16.38)	M17 X 1.0-6g	.113 .108	.594 (15.09)	.340 (8.64)	A2-CNU 04-211 STPECCA	g6-5.0 X 3M STPECCA	9-35
B	11	.7500 -0.1P-0.3L-TS-2A	1.386 (35.20) 1.362 (34.59)	1.268 (32.21) 1.236 (31.39)	.755 (19.18) .745 (18.92)	M20 X 1.0-6g		.719 (18.26)	.468 (11.89)			11-35
C	13	.8750 -0.1P-0.3L-TS-2A	1.512 (38.40) 1.488 (37.80)	1.390 (35.31) 1.358 (34.49)	.942 (23.93) .932 (23.67)	M25 X 1.0-6g		.812 (20.62)	.572 (14.53)			13-35
D	15	1.0000-0.1P-0.3L-TS-2A	1.638 (41.61) 1.614 (41.00)	1.516 (38.51) 1.484 (37.69)	1.066 (27.08) 1.056 (26.82)	M28 X 1.0-6g		.906 (23.01)	.705 (17.91)			15-35
E	17	1.1875 -0.1P-0.3L-TS-2A	1.764 (44.81) 1.740 (44.20)	1.642 (41.71) 1.610 (40.89)	1.191 (30.25) 1.181 (30.00)	M32 X 1.0-6g		1.030 (26.16)	.830 (21.08)			17-35
F	19	1.2500 -0.1P-0.3L-TS-2A	1.949 (49.50) 1.925 (48.90)	1.827 (46.41) 1.795 (45.59)	1.316 (33.43) 1.306 (33.17)	M35 X 1.0-6g	.145 .133	1.150 (29.21)	.934 (23.72)			19-35
G	21	1.3750 -0.1P-0.3L-TS-2A	2.075 (52.71) 2.051 (52.10)	1.953 (49.61) 1.921 (48.79)	1.441 (36.60) 1.431 (36.35)	M38 X 1.0-6g		1.221 (31.01)	1.055 (26.80)			21-35
H	23	1.5000 -0.1P-0.3L-TS-2A	2.201 (55.91) 2.177 (55.30)	2.079 (52.81) 2.047 (51.99)	1.566 (39.78) 1.556 (39.52)	M41 X 1.0-6g		1.360 (34.54)	1.160 (29.46)			23-35
J	25	1.6250 -0.1P-0.3L-TS-2A	2.323 (59.00) 2.299 (58.39)	2.205 (56.01) 2.173 (55.19)	1.691 (42.95) 1.681 (42.70)	M44 X 1.0-6g		1.475 (37.47)	1.307 (33.20)			25-35

Panel Cut-Out			
Shell Size Code	Shell Size Ref	ØJ	K Flat
A	9	.703 .693	.661 .654
B	11	.835 .825	.771 .761
C	13	1.020 1.010	.955 .945
D	15	1.145 1.135	1.085 1.075
E	17	1.270 1.260	1.210 1.200
F	19	1.395 1.385	1.335 1.325
G	21	1.520 1.510	1.460 1.450
H	23	1.645 1.635	1.585 1.575
J	25	1.770 1.760	1.710 1.700

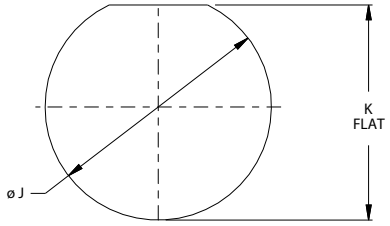

Recommended Cut-Out Panel

© 2022 Glenair, Inc • 1211 Air Way, Glendale, CA 91201 • 818-247-6000 • www.glenair.com • U.S. CAGE code 06324 • SuperNine® Catalog
Dimensions in Inches (millimeters) are subject to change without notice.

Rev. 06.18.24

ADVANCED PERFORMANCE

SuperNine® Environmental Series

MIL-DTL-38999 Series III Type

233-211-00 PCB dual-flange wall-mount receptacles

Part Number Development						
Sample Part Number	**233-211**	**-00**	**NF**	**17-8**	**P**	**N**
Series / Basic Part No.	**233-211** = SuperNine PCB receptacle with dual flange					
Connector Style*	**00** = Wall Mount Receptacle with Slotted Holes and Standard Stand-Off Thread **10** = Wall Mount Receptacle with Slotted Holes and Metric Stand-Off Thread **CM** = Wall Mount Receptacle with Metric Clinch Nuts **CS** = Wall Mount Receptacle with Standard Clinch Nuts **HM** = Wall Mount Receptacle with Metric Helicoils **HS** = Wall Mount Receptacle with Standard Helicoils **D0** = Wall Mount Receptacle with Round Holes					
Finish	**NF** = Al alloy/cadmium olive drab **ME** = Al alloy/electroless nickel **MT** = Al alloy/nickel PTFE **ZR** = Al alloy/black zinc nickel Consult factory for additional finish options					
Shell Size-Insert Arrangement*	Per MIL-STD-1560					
Contact Type	**P** = Pin, Gold, 1500 cycles **S** = Socket, Gold, 1500 cycles **H** = Pin, Pd/Ni, 1500 cycles **J** = Socket, Pd/Ni, 1500 cycles					
Alternate Polarization*	**A**, **B**, **C**, **D**, **E**, **N** = Normal, **U** = Univeral (IAW MIL-DTL-38999 Series III)					

***Refer to Section A for complete details**

Dimensions										
Shell Size Code	**Shell Size**	**A Thd** 0.1P-0.3L-TS-2A	**B Sq**	**B'**	**C Bsc**	**D Bsc⁶**	**E**	**F**	**G**	**G'**
A	9	.6250	.948 (24.08) .925 (23.50)	1.094 (27.79) 1.054 (26.77)	.719 (18.26)	.594 (15.09)	.136 (3.45) .120 (3.05)	.224 (5.69) .208 (5.28)	.122 (3.10) .083 (2.11)	.179 (4.55) .140 (3.56)
B	11	.7500	1.043 (26.49) 1.019 (25.88)	1.187 (30.15) 1.147 (29.13)	.812 (20.62)	.719 (18.26)		.202 (5.13) .186 (4.72)		
C	13	.8750	1.137 (28.88) 1.114 (28.30)	1.281 (32.54) 1.241 (31.52)	.906 (23.01)	.812 (20.62)				
D	15	1.0000	1.232 (31.29) 1.208 (30.68)	1.344 (34.14) 1.304 (33.12)	.969 (24.61)	.906 (23.01)		.181 (4.60) .165 (4.19)		
E	17	1.1875	1.323 (33.60) 1.299 (32.99)	1.437 (36.50) 1.397 (35.48)	1.062 (26.97)	.969 (24.61)		.202 (5.13) .186 (4.72)		
F	19	1.2500	1.449 (36.80) 1.425 (36.20)	1.531 (38.89) 1.491 (37.87)	1.156 (29.36)	1.062 (26.97)			.153 (3.89) .114 (2.90)	
G	21	1.3750	1.575 (40.00) 1.551 (39.40)	1.625 (41.28) 1.585 (40.26)	1.250 (31.75)	1.156 (29.36)				
H	23	1.5000	1.701 (43.21) 1.677 (42.60)	1.750 (44.45) 1.710 (43.43)	1.375 (34.92)	1.250 (31.75)	.162 (4.11) .146 (3.71)	.250 (6.35) .234 (5.94)		.190 (4.83) .170 (4.32)
J	25	1.6250	1.823 (46.30) 1.799 (45.69)	1.875 (47.63) 1.835 (46.61)	1.500 (38.10)	1.375 (34.92)				

Dimensions (Continued)										
Shell Size Code	**Shell Size**	**ØH ±.005**	**ØJ Bsc**	**Ø K ±.005**	**L Rad ±.020**	**M ±.020**	**N ±.010**	**ØP ±.005**	**R Thd**	**R' Thd**
A	9	1.016 (25.81)	.752 (19.10)	.532 (13.51)	.225 (5.72)	.275 (6.99)	.225 (5.72)	.535 (13.59)	.112-40 UNC	M3X0.5
B	11	1.062 (26.97)	.850 (21.59)	.595 (15.11)	.250 (6.35)	.290 (7.37)	.250 (6.35)	.560 (14.22)		
C	13	1.250 (31.75)	.994 (25.25)	.720 (18.29)	.375 (9.52)	.370 (9.40)	.250 (6.35)	.700 (17.78)		
D	15	1.375 (34.92)	1.119 (28.42)	.843 (21.41)	.438 (11.13)	.440 (11.18)	.325 (8.25)	.857 (21.77)		
E	17	1.500 (38.10)	1.237 (31.42)	1.000 (25.40)	.562 (14.27)	.495 (12.57)	.375 (9.52)	.980 (24.89)		
F	19	1.625 (41.28)	1.379 (35.03)	1.125 (28.58)	.875 (22.23)	.540 (13.72)	.500 (12.70)	1.060 (26.92)		
G	21	1.750 (44.45)	1.489 (37.82)	1.240 (31.50)	1.170 (29.72)	.625 (15.88)	.562 (14.27)	1.210 (30.73)		
H	23	1.875 (47.63)	1.619 (41.12)	1.328 (33.73)	1.250 (31.75)	.660 (16.76)	.688 (17.48)	1.310 (33.27)	.138-32 UNC	M4X0.7
J	25	2.000 (50.80)	1.744 (44.30)	1.453 (36.91)	1.375 (34.92)	.740 (18.80)	.750 (19.05)	1.460 (37.08)		

© 2022 Glenair, Inc • 1211 Air Way, Glendale, CA 91201 • 818-247-6000 • www.glenair.com • U.S. CAGE code 06324 • SuperNine® Catalog
Dimensions in Inches (millimeters) are subject to change without notice.

Rev. 06.19.24

SuperNine® Environmental Series

MIL-DTL-38999 Series III Type

233-211-00 PCB dual-flange wall-mount receptacles

00,10, CM, CS, HM, HS, D0 - WALL MOUNT RECEPTACLE

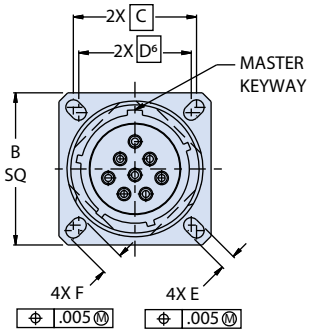

00 and 10 - SLOTTED HOLES

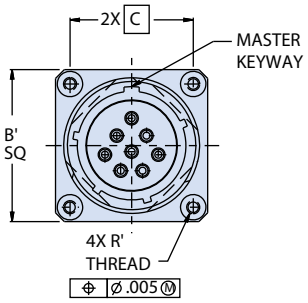

CM - METRIC CLINCH NUTS

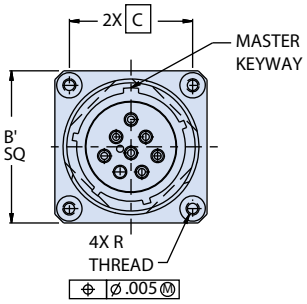

CS - STANDARD CLINCH NUTS

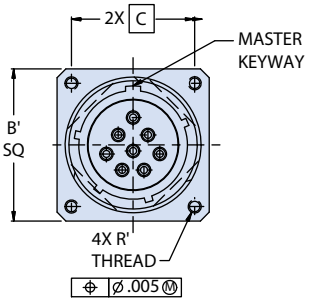

HM - METRIC HELICOILS

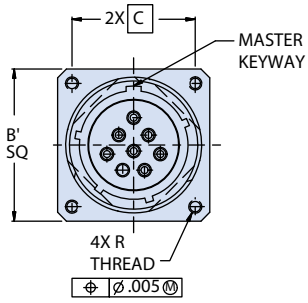

HS - STANDARD HELICOIL

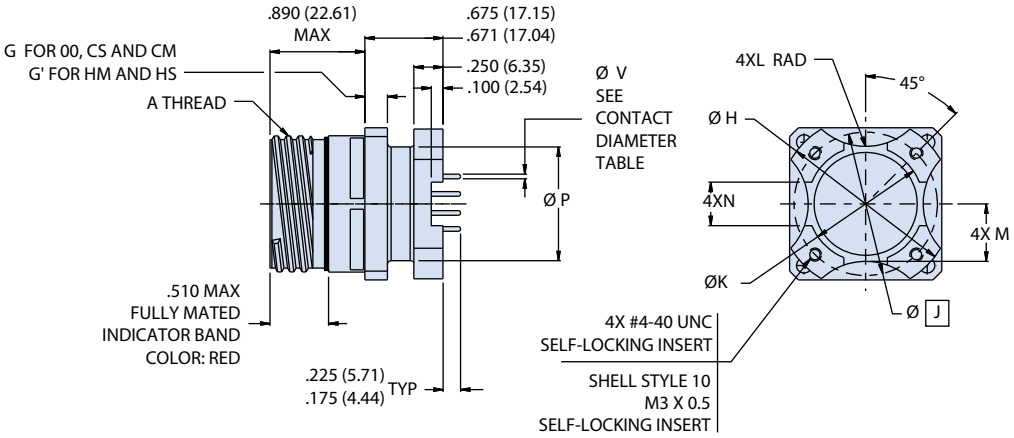

PC Tail Diameter	
Contact Size	ØV
23	.020 (.51) .018 (.46)
22	.020 (.51) .018 (.46)
20	.030 (.76) .028 (.71)
16	.040 (1.02) .038 (.97)
12	.072 (1.83) .070 (1.78)

NOTES

1. 233-211 is designed to meet or exceed the mechanical, electrical, environmental and dimensional requirements of D38999/20 or /24 and MIL-STD-1560 except as shown and/or noted.
2. Receptacle mates with 233-205/206 or any QPL manufacturer's D38999/26 series III plug having the same shell size, insert arrangement and polarization.
3. Insert arrangements IAW MIL-STD-1560.
4. 233-211 receptacle connector is designed with fixed PC tail contacts. Potting meets or exceeds ingress protection rating IP67 and is environmentally sealed with a leak rate of < 1 x 10^-4 ccHe/sec in an unmated condition.
5. Alternate polarization 'U' is a non-standard/non-mil-spec option, allows mating to any QPL manufacturers MIL-DTL-38999 connector, intended for use in testing facilities.
6. Front panel mount only

© 2022 Glenair, Inc • 1211 Air Way, Glendale, CA 91201 • 818-247-6000 • www.glenair.com • U.S. CAGE code 06324 • SuperNine® Catalog
Dimensions in Inches (millimeters) are subject to change without notice.

SuperNine® Environmental Series

MIL-DTL-38999 Series III Type

233-211-07 PCB dual-flange jam nut receptacles



Part Number Development						
Sample Part Number	**233-211**	**-07**	**NF**	**17-8**	**P**	**N**
Series / Basic Part No.	**233-211** = SuperNine PCB receptacle with dual flange					
Connector Style*	**07** = Rear panel mount, jam-nut receptacle					
Finish	**NF** = Al alloy/cadmium olive drab **ZR** = Al alloy/black zinc nickel **MT** = Al alloy/nickel PTFE **ME** = Al alloy/electroless nickel Consult factory for additional finish options					
Shell Size-Insert Arrangement*	Per MIL-STD-1560					
Contact Type	**P** = Pin, Gold, 1500 cycles **S** = Socket, Gold, 1500 cycles **H** = Pin, Pd/Ni, 1500 cycles **J** = Socket, Pd/Ni, 1500 cycles					
Alternate Polarization*	**A, B, C, D, E, N** = Normal (IAW MIL-DTL-38999 Series III)					

***Refer to Section A for complete details**

Dimensions														
Shell Size Code	**Shell Size**	**A Thread -0.1P-0.3L-TS-2A**	**Ø B**	**C Sq**	**D Flat**	**E Thd ISO metric 1.0-6g 0.100R**	**F**	**Ø G ±.005**	**Ø H ±.005**	**Ø J Bsc**	**Ø K ±.005**	**L Rad ±.020**	**M ±.020**	**N ±.010**
A	9	.6250	1.200 (30.48) 1.178 (29.92)	1.078 (27.38) 1.048 (26.62)	.654 (16.61) .645 (16.38)	M17	.122 (3.10) .083 (2.11)	.535 (13.59)	1.016 (25.81)	.752 (19.10)	.532 (13.51)	.225 (5.72)	.275 (6.99)	.225 (5.72)
B	11	.7500	1.386 (35.20) 1.362 (34.59)	1.268 (32.21) 1.236 (31.39)	.755 (19.18) .745 (18.92)	M20		.560 (14.22)	1.062 (26.97)	.850 (21.59)	.595 (15.11)	.250 (6.35)	.290 (7.37)	.250 (6.35)
C	13	.8750	1.512 (38.40) 1.488 (37.80)	1.390 (35.31) 1.358 (34.49)	.942 (23.93) .932 (23.67)	M25		.700 (17.78)	1.250 (31.75)	.994 (25.25)	.720 (18.29)	.375 (9.52)	.370 (9.40)	.250 (6.35)
D	15	1.0000	1.638 (41.61) 1.614 (41.00)	1.516 (38.51) 1.484 (37.69)	1.066 (27.08) 1.056 (26.82)	M28		.857 (21.77)	1.375 (34.92)	1.119 (28.42)	.843 (21.41)	.438 (11.13)	.440 (11.18)	.325 (8.25)
E	17	1.1875	1.764 (44.81) 1.740 (44.20)	1.642 (41.71) 1.610 (40.89)	1.191 (30.25) 1.181 (30.00)	M32 *		.980 (24.89)	1.500 (38.10)	1.237 (31.42)	1.000 (25.40)	.562 (14.27)	.495 (12.57)	.375 (9.52)
F	19	1.2500	1.949 (49.50) 1.925 (48.90)	1.827 (46.41) 1.795 (45.59)	1.316 (33.43) 1.306 (33.17)	M35	.153 (3.89) .114 (2.90)	1.060 (26.92)	1.625 (41.28)	1.379 (35.03)	1.125 (28.58)	.875 (22.23)	.540 (13.72)	.500 (12.70)
G	21	1.3750	2.075 (52.71) 2.051 (52.10)	1.953 (49.61) 1.921 (48.79)	1.441 (36.60) 1.431 (36.35)	M38		1.210 (30.73)	1.750 (44.45)	1.489 (37.82)	1.240 (31.50)	1.170 (29.72)	.625 (15.88)	.562 (14.27)
H	23	1.5000	2.201 (55.91) 2.177 (55.30)	2.079 (52.81) 2.047 (51.99)	1.566 (39.78) 1.556 (39.52)	M41		1.310 (33.27)	1.875 (47.63)	1.619 (41.12)	1.328 (33.73)	1.250 (31.75)	.660 (16.76)	.688 (17.48)
J	25	1.6250	2.323 (59.00) 2.299 (58.39)	2.205 (56.01) 2.173 (55.19)	1.691 (42.95) 1.681 (42.70)	M44		1.460 (37.08)	2.000 (50.80)	1.744 (44.30)	1.453 (36.91)	1.375 (34.92)	.740 (18.80)	.750 (19.05)

* Modified major diameter 31.95 - 31.80 (1.257 - 1.252)

© 2022 Glenair, Inc • 1211 Air Way, Glendale, CA 91201 • 818-247-6000 • www.glenair.com • U.S. CAGE code 06324 • SuperNine® Catalog
Dimensions in Inches (millimeters) are subject to change without notice.

SuperNine® Environmental Series

MIL-DTL-38999 Series III Type

233-211-07 PCB dual-flange jam nut receptacles

07 - JAM-NUT MOUNT RECEPTACLE

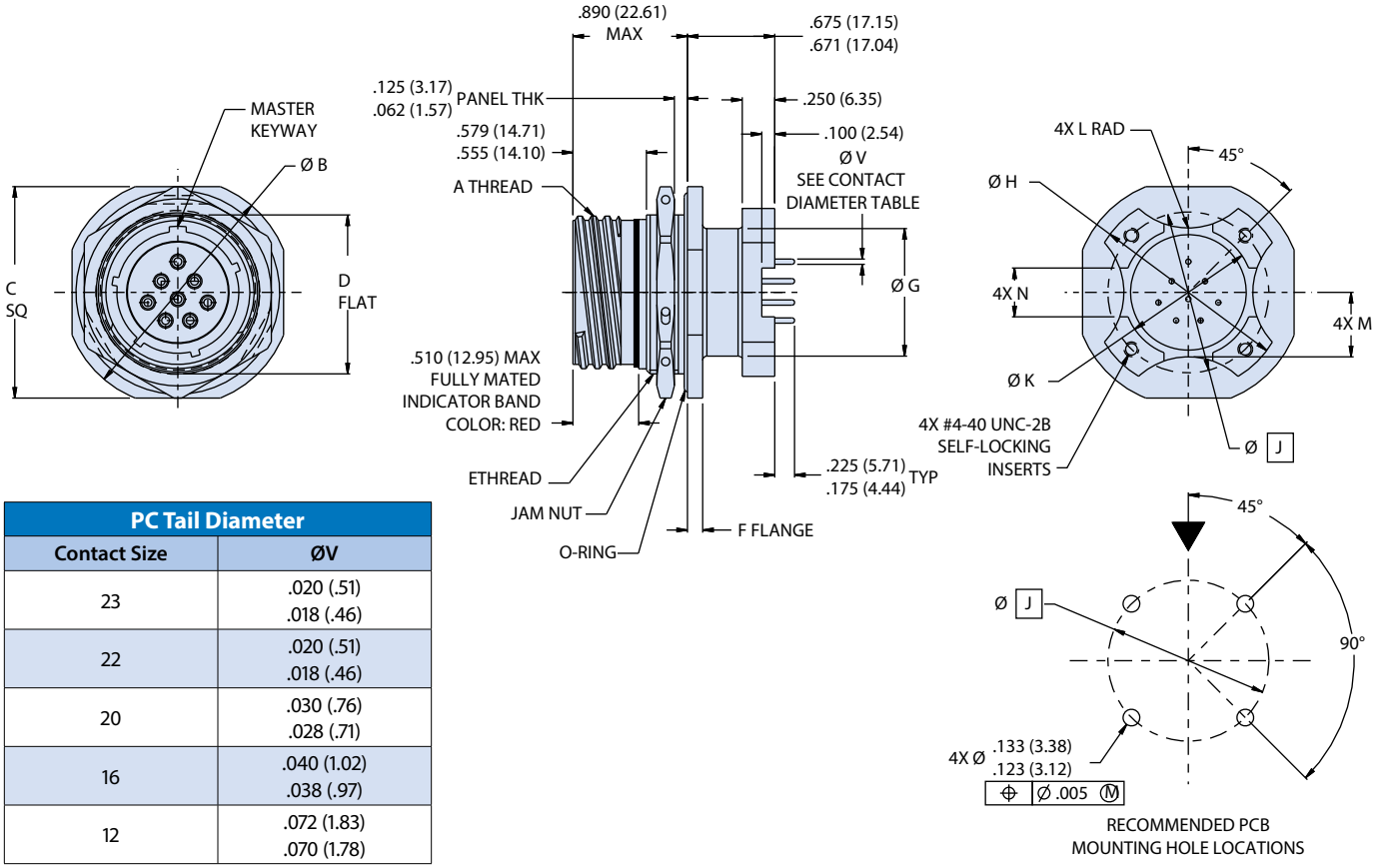

PC Tail Diameter	
Contact Size	**ØV**
23	.020 (.51) .018 (.46)
22	.020 (.51) .018 (.46)
20	.030 (.76) .028 (.71)
16	.040 (1.02) .038 (.97)
12	.072 (1.83) .070 (1.78)

NOTES

1. 233-211 is designed to meet or exceed the mechanical, electrical, environmental and dimensional requirements of D38999/24 and MIL-STD-1560 except as shown and/or noted. Receptacle mates with any QPL manufacturer's D38999/26 series III plug having the same shell size, insert arrangement and polarization.
2. 233-211-07 receptacle connector is designed with fixed PC tail contacts. Connector potting process meets or exceeds ingress protection rating IP67 and is environmentally sealed with a leak rate of < 1 x 10^-4 ccHe/sec in an unmated condition.
3. 233-211-07 receptacle connector is designed to withstand a minimum of 1500 mating durability cycles when mated to a SuperNine® plug and appropriate contacts. Contact finish should be the same for both mating coonnectors to optimize performance
4. Insert arrangements IAW MIL-STD-1560. Contact manufacturer for additional arrangement options.
5. Material/finish
   - Shell: see part number development, finish
   - Contacts: copper alloy/see part number development, contact type
   - Insulators: high-grade rigid dielectric/N.A.
   - Seals: fluorosilicone blend/N.A.
   - Potting: epoxy/N.A.
   - O-ring: silver plated aluminum in fluorosilicone (cho-seal 1298) or equivalent)

© 2022 Glenair, Inc • 1211 Air Way, Glendale, CA 91201 • 818-247-6000 • www.glenair.com • U.S. CAGE code 06324 • SuperNine® Catalog
Dimensions in Inches (millimeters) are subject to change without notice.

SuperNine® Environmental Series

MIL-DTL-38999 Series III Type

2333-2007 dual flange, jam-nut mount receptacle with PC tails

Part Number Development						
Sample Part Number	**2333-2007**	**NF**	**17-8**	**P**	**N**	**L**
Series / Basic Part No.	**2333-2007** = SuperNine dual flange receptacle with epoxy sealed PC tails					
Finish	**NF** = Al alloy/cadmium olive drab **ZR** = Al alloy/black zinc nickel **MT** = Al alloy/nickel PTFE **ME** = Al alloy/electroless nickel Consult factory for additional finish options					
Shell Size-Insert Arrangement*	Per MIL-STD-1560					
Contact Type	**P** = Pin, P.C. termination **S** = Socket, P.C. termination					
Alternate Polarization*	**A, B, C, D, E, N** = Normal (IAW MIL-DTL-38999 Series III)					
PC Tail Length	**L** = .280 (7.11) min Omit for basic .142 (3.61)					

NOTES

1. Glenair's 2333-2007 receptacle connector is designed with fixed PC tail contacts. Connector potting process meets or exceeds ingress protection rating IP67 and is environmentally selaed with a leak rate of < 1 X 10^{-4} ccHe/sec in an unmated condition
2. Insert arrangmenent is in accordance with MIL-STD-1560. Contact manufacturer for additional arrangement options. Insert arrangement shown is for reference only.
3. Glenair P/N 2333-2007 receptacle is designed to meet or exceed the mechanical, dimensional, electrical, and environmental requirements of MIL-DTL-38999, D38999/24, and MIL-STD-1560 except as shown and/or noted. Receptacle mates with any QPL manufacturer's MIL-DTL-38999, Series III plug connector, D38999/26, having the same shell size, insert arrangement and polarization.
4. Modified major diameter 31.95 - 31.80 (1.257 - 1.252).
5. Material / finish:
   - Shell, jam-nut - see P/N development
   - Contacts - copper alloy / gold plate
   - Insulator - rigid dielectric
   - Seals - fluorosilicone blend
   - Potting - epoxy
   - O-ring - silver plated aluminum in fluorosilicone
   - (Cho-seal 1298 or equivalent)

© 2022 Glenair, Inc • 1211 Air Way, Glendale, CA 91201 • 818-247-6000 • www.glenair.com • U.S. CAGE code 06324 • SuperNine® Catalog
Dimensions in Inches (millimeters) are subject to change without notice.

SuperNine® Environmental Series

MIL-DTL-38999 Series III Type

2333-2007 dual flange, jam-nut mount receptacle with PC tails

07 - DUAL FLANGE JAM-NUT MOUNT RECEPTACLE

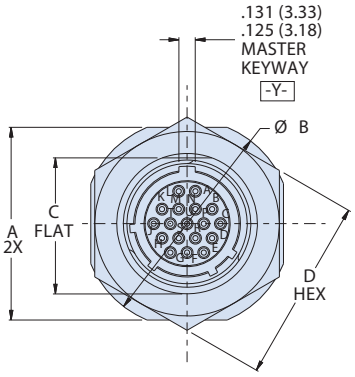

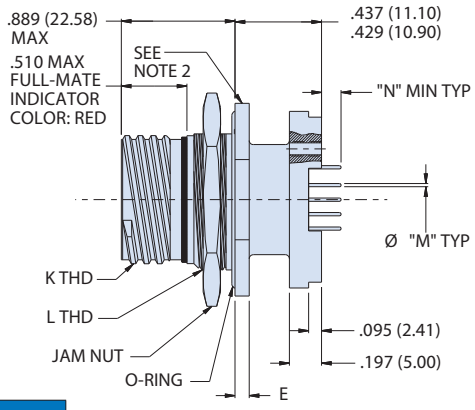

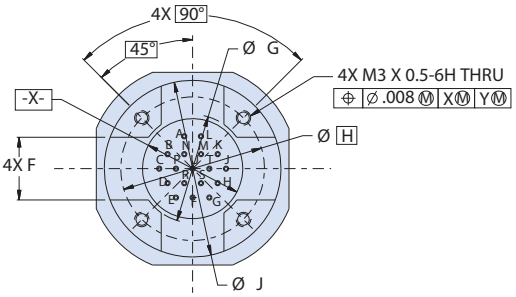

FLANGE CONFIGURATION
SHELL SIZE 13 THRU 25

PC Tail Diameter			
Contact Size	PC Tail Ø "M"	"N" Min Length	
		Basic	"L"
22	.022 (0.56) .018 (.46)	.142 (3.61)	.280 (7.11)
20	.032 (0.81) .027 (0.69)	.142 (3.61)	.280 (7.11)
16	.042 (1.07) .038 (0.97)	.142 (3.61)	.280 (7.11)
12	.096 (2.44) .092 (2.34)	.142 (3.61)	.280 (7.11)

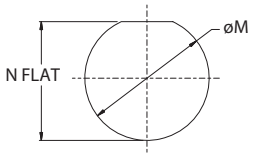

Recommended Panel Cut-out

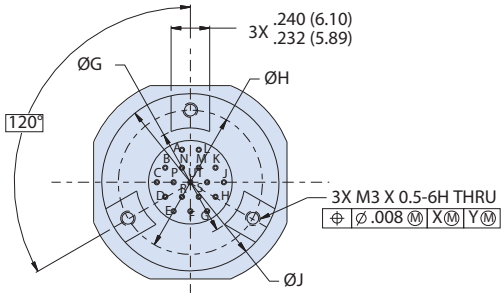

FLANGE CONFIGURATION
SHELL SIZE 9 & 11

Dimensions														
SHELL SIZE CODE	SHELL SIZE REF	A ±.016	ø B ±.012	C FLAT ±.005	D HEX ±.015	E ±.016	F ±.004	ø G ±.006	ø H BSC	ø J ±.006	K THREAD CLASS 2A .1P-.3L-TS (PLATED)	L THREAD METRIC (PLATED)	ø M	N FLAT
A	9	1.063 (27.00)	1.189 (30.20)	0.650 (16.51)	0.945 (24.00) 0.859 (21.82)	0.098 (2.49)		0.594 (15.09)	0.807 (20.50)	1.024 (26.01)	0.625 (15.88)	M17 x 1-6g-0.10R	0.703 (17.86) 0.693 (17.60)	0.661 (16.79) 0.654 (16.61)
B	11	1.252 (31.80)	1.374 (34.90)	0.750 (19.05)	1.063 (27.00) 0.984 (24.99)	0.098 (2.49)		0.783 (19.89)	0.992 (25.20)	1.213 (30.81)	0.7500 (19.05)	M20 x 1-6g-0.10R	0.835 (21.21) 0.825 (20.96)	0.771 (19.58) 0.761 (19.33)
C	13	1.374 (34.90)	1.500 (38.10)	0.937 (23.80)	1.260 (32.00) 1.172 (29.77)	0.098 (2.49)	0.476 (12.09)	0.783 (19.89)	0.994 (25.25)	1.213 (30.81)	0.8750 (22.23)	M25 x 1-6g-0.10R	1.020 (25.91) 1.010 (25.65)	0.955 (24.26) 0.945 (24.00)
D	15	1.500 (38.10)	1.626 (41.30)	1.061 (26.95)	1.417 (35.99) 1.296 (32.92)	0.098 (2.49)	0.555 (14.10)	0.906 (23.01)	1.119 (28.42)	1.335 (33.91)	1.0000 (25.40)	M28 x 1-6g-0.10R	1.145 (29.08) 1.135 (28.83)	1.085 (27.56) 1.075 (27.31)
E	17	1.626 (41.30)	1.752 (44.50)	1.186 (30.12)	1.457 (37.01) 1.422 (36.12)	0.098 (2.49)	0.634 (16.10)	1.024 (26.01)	1.237 (31.42)	1.449 (36.80)	1.1875 (30.16)	M32 x 1-6g-0.10R*	1.270 (32.26) 1.260 (32.00)	1.210 (30.73) 1.200 (30.48)
F	19	1.811 (46.00)	1.937 (49.20)	1.311 (33.30)	1.614 (41.00) 1.545 (39.24)	0.130 (3.30)	0.713 (18.11)	1.161 (29.49)	1.379 (35.03)	1.591 (40.41)	1.2500 (31.75)	M35 x 1-6g-0.10R	1.395 (35.43) 1.385 (35.18)	1.335 (33.91) 1.325 (33.66)
G	21	1.937 (49.20)	2.063 (52.40)	1.436 (36.47)	1.811 (46.00) 1.672 (42.47)	0.130 (3.30)	0.791 (20.09)	1.268 (32.21)	1.489 (37.82)	1.701 (43.21)	1.3750 (34.93)	M38 x 1-6g-0.10R	1.520 (38.61) 1.510 (38.35)	1.460 (37.08) 1.450 (36.83)
H	23	2.063 (52.40)	2.189 (55.60)	1.561 (39.65)	1.969 (50.01) 1.796 (45.62)	0.130 (3.30)	0.909 (23.09)	1.398 (35.51)	1.619 (41.12)	1.831 (46.51)	1.5000 (38.10)	M41 x 1-6g-0.10R	1.645 (41.78) 1.635 (41.53)	1.585 (40.26) 1.575 (40.01)
J	25	2.189 (55.60)	2.311 (58.70)	1.686 (42.82)	2.017 (51.23) 1.939 (49.25)	0.130 (3.30)	0.988 (25.10)	1.520 (38.61)	1.744 (44.30)	1.953 (49.61)	1.6250 (41.28)	M44 x 1-6g-0.10R	1.770 (44.96) 1.760 (44.70)	1.710 (43.43) 1.700 (43.18)

*See note 4

© 2022 Glenair, Inc • 1211 Air Way, Glendale, CA 91201 • 818-247-6000 • www.glenair.com • U.S. CAGE code 06324 • SuperNine® Catalog
Dimensions in Inches (millimeters) are subject to change without notice.



SAV-CON®

Connector Savers

The smart solution for preventing contact damage and extending the service life of cable assemblies and box and panel-mount receptacles.

Glenair Sav-Con® Connector Savers are designed to protect connectors that are subject to repeated mating and unmating cycles. Sav-Con® Connector Savers prevent costly repair or replacement of expensive connectors and cables while preserving the quality and integrity of connector performance. Sav-Con® Connector Savers take the abuse of repeated connection cycles instead of "black box" or other equipment connectors. Equipment connectors that are mated and unmated frequently during manufacturing, check-out phases and environmental test programs can be protected by Glenair Sav-Con® Connector Savers at considerable savings in time and money.



Gender changers provide a simple solution to mismatched connector interfaces and are available in bulkhead feed-through or in-line configurations



High-reliability connector savers prevent mating cycle damage to receptacle connectors during qualification and test, significantly reducing wear and the possibility of damage prior to delivery

Features:

- **SuperNine series Sav-Con®s are available in space-grade (Class G) for both laboratory test and flight applications**
- **Available for every standard 1560 insert arrangement**
- **Broad range of finish platings**
- **High-reliability performance**
- **500 mating cycles**
- **Gender changers**
- **Independent pin and socket contact selection**
- **Independent keyed polarization**
- **Wall mount and jam-nut mount bulkhead feed-thrus**

© 2022 Glenair, Inc • 1211 Air Way, Glendale, CA 91201 • 818-247-6000 • www.glenair.com • U.S. CAGE code 06324 • SuperNine® Catalog
Dimensions in Inches (millimeters) are subject to change without notice.

Sav-Con® connector savers

Circular, rectangular, and special application

MIlitary standard and commercial connectors

FULL RANGE OF SUPERNINE SERIES ENVIRONMENTAL SAV-CON®S



SuperNine MIL-DTL-38999 Series III Type In-Line Plug/ Receptacle Sav-Con



SuperNine MIL-DTL-38999 Series III Type Bulkhead Feed-Thru Gender Changer / Sav-Con



SuperNine MIL-DTL-38999 Series III Type In-Line Sav-Con Gender Changer



SuperNine Special Application Sav-Con®s Solving Unique Customer Problems

SAV-CON® RECTANGULAR D-SUBMINIATURE, MICRO, AND NANO MINIATURE CONNECTOR SERIES

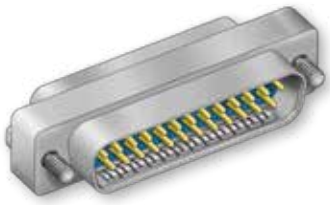

M24308 D-subminiature



Micro-D



Nano-Miniature™



HiPer-D®

SAV-CON® SPECIAL APPLICATION CONNECTOR SERIES



MIL-DTL-38999 Series I Bayonet-Lock Sav-Con



MIL-DTL-38999 Series III Type Filtered Adapter



HiPer-D® Gender Changer



Micro-D Filter

Each Glenair Sav-Con® Connector Saver meets the military specification performance requirements of its mating connector. Glenair manufactures and supplies a Sav-Con® connector saver for most every military standard connector currently in use including:

- **MIL-DTL-26482 Series I and II**
- **MIL-DTL-28840**
- **MIL-DTL-38999 Series I, II and III**
- **MIL-DTL-83723 LN 29729 (SJT)**
- **PATT 105 and PATT 602**
- **Series 801 and 805 Mighty Mouse**
- **M24308 D-Subminiature**
- **MIL-DTL-83513 Micro-D Subminiature**
- **MIL-DTL-5015**
- **Series 28 HiPer-D® M24308 intermateable**
- **Series 89 Nano Miniature™ M32139**
- **Series 79 Micro-Crimp®**

Comprehensive materials, plating, and polarization options available

© 2022 Glenair, Inc • 1211 Air Way, Glendale, CA 91201 • 818-247-6000 • www.glenair.com • U.S. CAGE code 06324 • SuperNine® Catalog
Dimensions in Inches (millimeters) are subject to change without notice.

SuperNine® Environmental Series

MIL-DTL-38999 Series III Type

MIL-STD-1560 supported insert arrangements for Sav-Con®

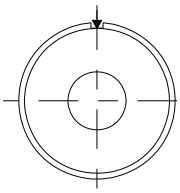

ARRANGEMENT 9G5
1 X SIZE 8
(COMMON GROUND ONLY)
see note 1

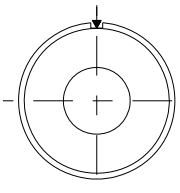

ARRANGEMENT 11-01
1 X SIZE 8
see note 1

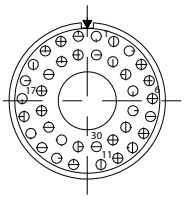

ARRANGEMENT 17-02
1X SIZE 8
38X SIZE 22

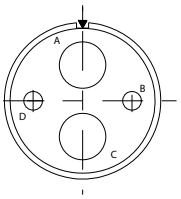

ARRANGEMENT 17-22
2X SIZE 8
2X SIZE 12

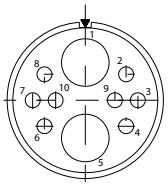

ARRANGEMENT
17-602X SIZE 8
8X SIZE 22

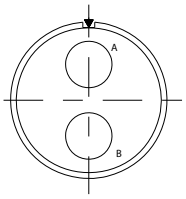

ARRANGEMENT 17-75
2X SIZE 8
see note 1

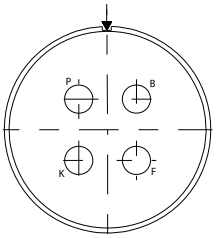

ARRANGEMENT 19-4
4X SIZE 8
see note 1

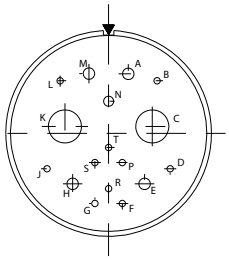

ARRANGEMENT 19-17
10X SIZE 22D
1X SIZE 20
4X SIZE 16
2X SIZE 8

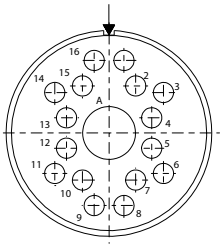

ARRANGEMENT 19A-17
20X SIZE 16
1X SIZE 8

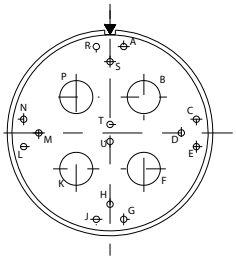

ARRANGEMENT 19-18
14X SIZE 22D
4X SIZE 8

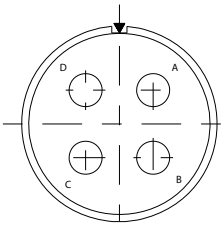

ARRANGEMENT 21-75
4X SIZE 8
see note 1

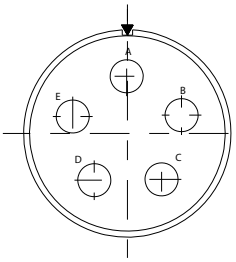

ARRANGEMENT 23-5
5X SIZE 8
see note 1

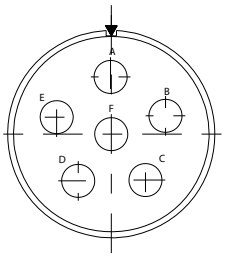

ARRANGEMENT 23-6
6X SIZE 8
see note 1

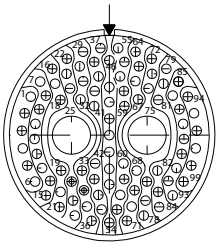

ARRANGEMENT 25-7
97X SIZE 22
2X SIZE 8

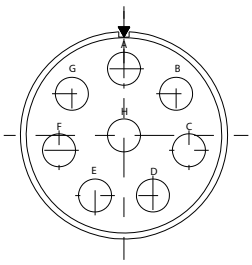

ARRANGEMENT 25-8
8X SIZE 8
see note 1

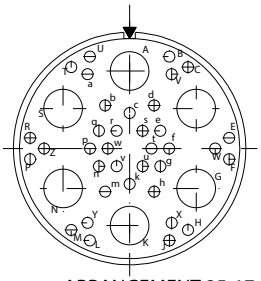

ARRANGEMENT 25-17
36X SIZE 22
6X SIZE 8

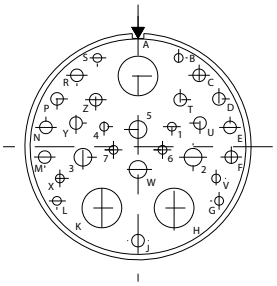

ARRANGEMENT 25-20
10X SIZE 20
13X SIZE 16
4X SIZE 12
3X SIZE 8

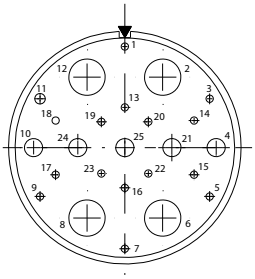

ARRANGEMENT 25-26
16X SIZE 20
5X SIZE 12
4X SIZE 8

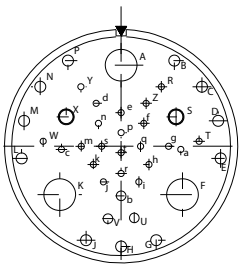

ARRANGEMENT 25-41
22X SIZE 22D, 3X SIZE 20
11X SIZE 16, 2X SIZE 12
3X SIZE 8

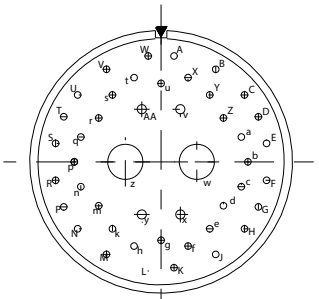

ARRANGEMENT 25-46
40X SIZE 20
4X SIZE 16
2X SIZE 8

1. Ground plane option only available for insert arrangements where all contacts are shielded type.
2. Arrangements shown support signal/power contacts only. Contact factory for special requirements.

© 2022 Glenair, Inc • 1211 Air Way, Glendale, CA 91201 • 818-247-6000 • www.glenair.com • U.S. CAGE code 06324 • SuperNine® Catalog
Dimensions in Inches (millimeters) are subject to change without notice.

SuperNine® Environmental Series

MIL-DTL-38999 Series III Type

233-213 Sav-Con® in-line connector saver

ENVIRONMENTAL IN-LINE WITH PIN/PIN AND SOCKET/SOCKET OPTIONS PLUS INDEPENDENT ALTERNATE POLARIZATION

Part Number Developement							
Sample Part Number	**233-213**	**-NF**	**17-8**	**P**	**N**	**S**	**N**
Series / Basic Part No.	**233-213** = Sav-Con Connector Saver, High Reliability class						
Finish	**NF** = Cadmium Olive Drab **ME** = Electroless Nickel **MT** = Nickel PTFE **ZR** = Black Zinc Nickel Consult factory for additional finish options						
Shell Size - Insert Arrangement*	Per MIL-STD-1560; see page 54						
Contact Style (Plug Side)	**P** = Pin, gold, 500 cycles **S** = Socket, gold, 500 cycles See Notes 3 and 4						
Alternate Polarization* (Plug Side)	**A**, **B**, **C**, **D**, **E**, **N** = Normal, **U** = Universal see note 6						
Contact Style (Receptacle Side)	**P** = Pin, gold, 500 cycles **S** = Socket, gold, 500 cycles See Notes 3 and 4						
Alternate Polarization* (Receptacle Side)	**A**, **B**, **C**, **D**, **E**, **N** = Normal, **U** = Universal; See Note 6						

***Refer to Section A for complete details**

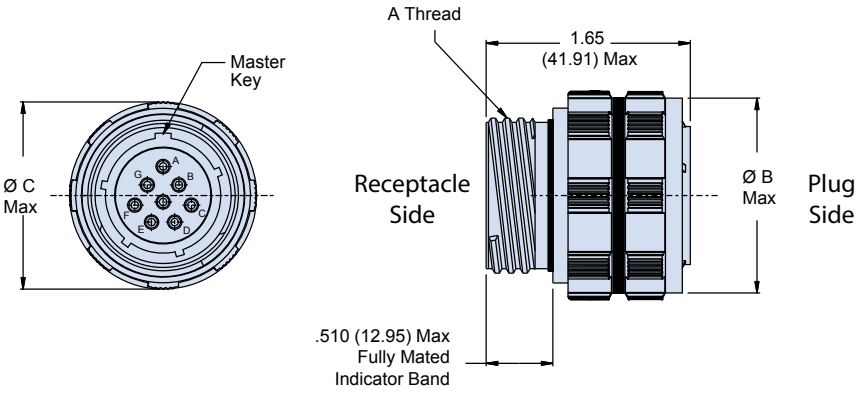

Dimensions				
Shell Size Code	**Shell Size**	**A Thread**	**Ø B Max**	**Ø C Max**
A	9	.6250 – 0.1P – 0.3L – TS-2A	.811 (20.60)	.858 (21.79)
B	11	.7500 – 0.1P – 0.3L – TS-2A	.929 (23.60)	.984 (24.99)
C	13	.8750 – 0.1P – 0.3L – TS-2A	1.110 (28.19)	1.157 (29.39)
D	15	1.0000 – 0.1P – 0.3L – TS-2A	1.232 (31.29)	1.280 (32.51)
E	17	1.1875 – 0.1P – 0.3L – TS-2A	1.358 (34.49)	1.406 (35.71)
F	19	1.2500 – 0.1P – 0.3L – TS-2A	1.469 (37.31)	1.516 (38.51)
G	21	1.3750 – 0.1P – 0.3L – TS-2A	1.594 (40.49)	1.642 (41.71)
H	23	1.5000 – 0.1P – 0.3L – TS-2A	1.720 (43.69)	1.768 (44.91)
J	25	1.6250 – 0.1P – 0.3L – TS-2A	1.843 (46.81)	1.890 (48.01)

NOTES

1. Glenair's 233-213 connector savers are designed to meet or exceed the mechanical dimensional, electrical, and environmental, requirements of MIL-DTL-38999, D38999/20, D38999/26, and MIL-STD-1560 except as shown and /or noted.
2. Glenair connector savers mate with any QPL manufacturer's MIL-DTL-38999, series III plugs and receptacles that have the same shell size, insert arrangement, and polarization.
3. For pin/pin and socket/socket, symmetrical insert layouts only.
4. Power to a given contact on one end will result in power to a contact directly opposite, regardless of identification letter.
5. Electrical safety limits must be established by user. Peak voltage, switching surge, transient, etc. should be used to determine the safety application.
6. Alternate polarization 'U' (universal) is a non-standard/non-mill-spec option intended for test lab use only which allows for mating to any QPL manufacturer's MIL-DTL-38999, series III connector having the same shell size, insert arrangement, and mating contact size.
7. Material/finish:
   - Barrel, coupling nut: see part number development, finish
   - detent spring: stainless steel/ passivated
   - insulator: high grade rigid dielectric/ N.A.
   - Seals: fluorosilicone blend/N.A.
   - Contacts: copper alloy/gold plated
8. Signal power inserts only, see Section C, part number 233-228 for size 8 cavity options.

© 2022 Glenair, Inc • 1211 Air Way, Glendale, CA 91201 • 818-247-6000 • www.glenair.com • U.S. CAGE code 06324 • SuperNine® Catalog
Dimensions in Inches (millimeters) are subject to change without notice.

Rev. 06.19.24

ADVANCED PERFORMANCE

SuperNine® Environmental Series

MIL-DTL-38999 Series III Type

233-214 Sav-Con® in-line plug / plug connector saver



Part Number Developement							
Sample Part Number	**233-214**	**-NF**	**17-8**	**P**	**N**	**S**	**N**
Series / Basic Part No.	**233-214** = Sav-Con Connector Saver with polarization options						
Finish	**NF** = Cadmium Olive Drab **ME** = Electroless Nickel **MT** = Nickel PTFE **ZR** = Black Zinc Nickel Consult factory for additional finish options						
Shell Size - Insert Arrangement*	Per MIL-STD-1560, see page 54 for supported layouts; see note 7						
Contact Style (Plug Side)	**P** = Pin, gold, 500 cyles **S** = Socket, gold, 500 cycles See notes 2 and 3						
Alternate Polarization* (Plug Side)	**A**, **B**, **C**, **D**, **E**, **N** = Normal, **U** = Universal; See Note 5						
Contact Style (Plug Side)	**P** = Pin, gold, 500 cyles **S** = Socket, gold, 500 cycles See notes 2 and 3						
Alternate Polarization* (Plug Side)	**A**, **B**, **C**, **D**, **E**, **N** = Normal, **U** = Universal; See Note 5						

***Refer to Section A for complete details**

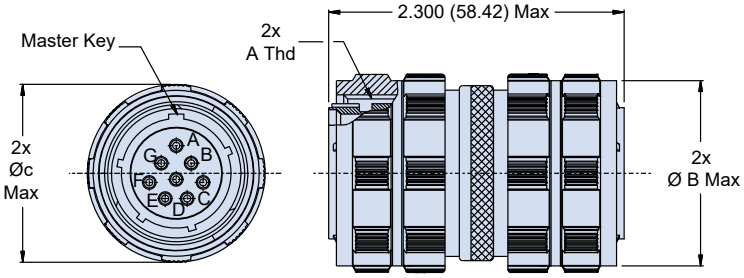

Dimensions				
Shell Size Code	**Shell Size**	**A Thread .1P-.3I-TS-2B**	**ØB Max**	**ØC Max**
A	9	.6250	0.811 (20.6)	0.858 (21.8)
B	11	.7500	0.929 (23.6)	0.984 (25.0)
C	13	.8750	1.110 (28.2)	1.157 (29.4)
D	15	1.0000	1.232 (31.3)	1.280 (32.5)
E	17	1.1875	1.358 (34.5)	1.406 (35.7)
F	19	1.2500	1.469 (37.3)	1.516 (38.5)
G	21	1.3750	1.594 (40.5)	1.642 (41.7)
H	23	1.5000	1.720 (43.7)	1.768 (44.9)
J	25	1.6250	1.843 (46.8)	1.890 (48.0)

NOTES

1. Glenair's 233-214 connector savers are designed to meet or exceed the mechanical dimensional, electrical, and environments, requirements of MIL-DTL-38999, D38999/20 and /24 and MIL-STD-1560 except as shown and /or noted. Glenair connector savers mate with any QPL manufacturer's MIL-DTL-38999, series III plugs and receptacles have the same shell size, insert arrangement, and polarization.
2. For pin/pin and socket/socket, symmetrical layout only.
3. Power to a given contact on one end will result in power to a contact directly opposite, regardless of identification letter.
4. Electrical safety limits must be established by user. Peak voltage, switching surge, transient, etc. should be used to determine the safety application.
5. Alternate polarization 'U' (universal) is a non-standard/non-mill-spec option intended for test lab use only which allows for mating to any QPL manufacturer's MIL-DTL-38999, series III connector having the same shell size, insert arrangement, and mating contact size. Universal connectors are intended for use in testing facilities only and should be highly evaluated before consideration in another environment.
6. Signal/power inserts only.
7. Material/finish
   - Barrel, coupling nut: see part number development, finish
   - Detent spring: stainless steel/passivated
   - Insulator: high grade rigid dielectric/N.A.
   - Seals: fluorosilicone blend/N/A.
   - contacts: copper alloy/gold plated

© 2022 Glenair, Inc • 1211 Air Way, Glendale, CA 91201 • 818-247-6000 • www.glenair.com • U.S. CAGE code 06324 • SuperNine® Catalog
Dimensions in Inches (millimeters) are subject to change without notice.

SuperNine® Environmental Series

MIL-DTL-38999 Series III Type

233-212-00 Wall-mount bulkhead feed-thrus

Part Number Development									
Sample Part Number	**233-212**	**-00**	**NF**	**17-8**	**P**	**N**	**S**	**N**	**-01**
Series / Basic Part No.	**233-212** = SuperNine Environmental Bulkhead eedthru								
Connector Style	**00** = Wall Mount Receptacle with Slotted Holes **CM** = Wall Mount Receptacle with Metric Clinch Nuts **CS** = Wall Mount Receptacle with Standard Clinch Nuts **HM** = Wall Mount Receptacle with Metric Helicoils **HS** = Wall Mount Receptacle with Standard Helicoils **05** = In-Line Receptacle Consult factory for additional finish options								
Finish*	**NF** = Cadmium Olive Drab **ME** = Electroless Nickel **MT** = Nickel PTFE **ZR** = Black Zinc Nickel								
Shell Size-Insert Arrangement*	Per MIL-STD-1560, see page 54 for supported layouts; see note 7								
Contact Type (Panel Side) See Note 1	**P** = Pin, Panel Side; 500 Cycles **S** = Socket, Panel Side; 500 Cycles								
Alternate Polarization*	**A**, **B**, **C**, **D**, **E**, **N** = Normal, **U** = Universal								
Contact Type (Flange Side) See Note 1	**P** = Pin, Flange Side; 500 Cycles **S** = Socket, Flange Side; 500 Cycles								
Alternate Polarization*	**A**, **B**, **C**, **D**, **E**, **N** = Normal, **U** = Universal								
Panel Accommodation	**-01** = .062/.125 **-02** = .062/.250 **-03** = .062/.500								

***Refer to Section A for complete details**

Dimensions											
Shell Size Code	**Shell Size**	**A Thread -0.1P-0.3L-TS-2A**	**B Sq**	**B' Sq**	**C Bsc**	**D Bsc⁴**	**E**	**F**	**G**	**G'**	**H Thd**	**H' Thd**
A	9	.6250	.949 (24.10) .925 (23.50)	1.094 (27.79) 1.054 (26.77)	.719 (18.26)	.594 (15.09)	.136 (3.45) .120 (3.05)	.224 (5.69) .208 (5.28)	.122 (3.10) .083 (2.11)	.179 (4.55) .140 (3.56)	.112-40	M3X0.5
B	11	.7500	1.043 (26.49) 1.019 (25.88)	1.187 (30.15) 1.147 (29.13)	.812 (20.62)	.719 (18.26)		.202 (5.13) .186 (4.72)				
C	13	.8750	1.138 (28.91) 1.114 (28.30)	1.281 (32.54) 1.241 (31.52)	.906 (23.01)	.812 (20.62)						
D	15	1.0000	1.232 (31.29) 1.208 (30.68)	1.344 (34.14) 1.304 (33.12)	.969 (24.61)	.906 (23.01)		.181 (4.60) .165 (4.19)				
E	17	1.1875	1.323 (33.60) 1.299 (32.99)	1.437 (36.50) 1.397 (35.48)	1.062 (26.97)	.969 (24.61)						
F	19	1.2500	1.449 (36.80) 1.425 (36.20)	1.531 (38.89) 1.491 (37.87)	1.156 (29.36)	1.062 (26.97)		.202 (5.13) .186 (4.72)	.153 (3.89) .114 (2.90)			
G	21	1.3750	1.575 (40.00) 1.551 (39.40)	1.625 (41.28) 1.585 (40.26)	1.250 (31.75)	1.156 (29.36)						
H	23	1.5000	1.701 (43.21) 1.677 (42.60)	1.750 (44.45) 1.710 (43.43)	1.375 (34.92)	1.250 (31.75)	.162 (4.11) .146 (3.71)	.250 (6.35) .234 (5.94)		.190 (4.83) .170 (4.32)	.138-32	M4X0.7
J	25	1.6250	1.823 (46.30) 1.799 (45.69)	1.875 (47.63) 1.835 (46.61)	1.500 (38.10)	1.375 (34.92)						

© 2022 Glenair, Inc • 1211 Air Way, Glendale, CA 91201 • 818-247-6000 • www.glenair.com • U.S. CAGE code 06324 • SuperNine® Catalog
Dimensions in Inches (millimeters) are subject to change without notice.

Rev. 06.19.24

SuperNine® Environmental Series

MIL-DTL-38999 Series III Type

233-212-00 Wall-mount bulkhead feed-thrus

00, CM, CS, HM, HS, 05 - WALL MOUNT RECEPTACLES

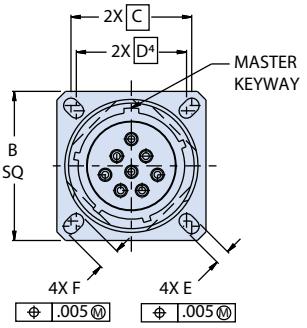

00 - SLOTTED HOLES

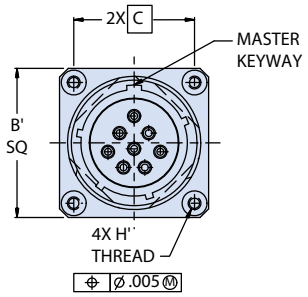

CM - METRIC CLINCH NUTS

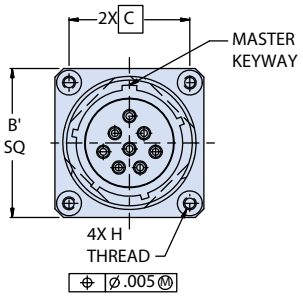

CS - STANDARD CLINCH NUTS

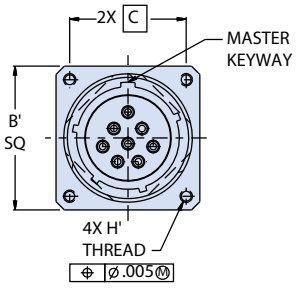

HM - METRIC HELICOILS

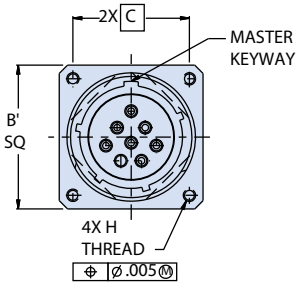

HS - STANDARD HELICOIL

Panel Accommodation		
Sym	Panel Thickness	J Max
01	.125 (3.18) .062 (1.57)	1.70 (43.18)
02	.250 (6.35) .062 (1.57)	1.83 (46.48)
03	.500 (12.70) .062 (1.57)	2.08 (52.83)

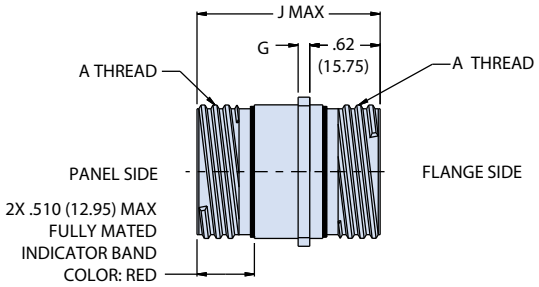

NOTES:

1. 233-212 feed-thru connector is designed to meet or exceed the mechanical, dimensional, electrical, and environmental requirements of MIL-DTL-38999, D38999/20, and MIL-STD-1560 except as shown and/or noted. Feed-thru mates with any QPL manufacturer's MIL-DTL-38999, Series III plug connector, D38999/26, having the same shell size, insert arrangement, and polarization.
2. For pin/pin and socket/socket, symmetrical layouts only, consult factory for available symmetrical insert arrangements.
3. Power to a given contact on one end will result in power to a given contact directly opposite, regardless of identification letter.
4. Front panel mount only
5. Alternate polarization 'U' is a non-standard/non-mil-spec option, allows mating to any QPL manufacturers MIL-DTL-38999 connector, intended for use in testing facilities.
6. Electrical safety limits must be established by user. Peak voltage, switching surge, transient, etcetera should be determined the safety application.
7. Signal/power inserts only, see Section C, P/N 233-277 for size 8 cavity options.
8. Material/finish
   - Shell: see P/N development, finish
   - Contacts: copper alloy/gold plated
   - Insulators: high-grade rigid dielectric/N.A.
   - Seals: fluorosilicone blend/N.A.

© 2022 Glenair, Inc • 1211 Air Way, Glendale, CA 91201 • 818-247-6000 • www.glenair.com • U.S. CAGE code 06324 • SuperNine® Catalog
Dimensions in Inches (millimeters) are subject to change without notice.

SuperNine® Environmental Series

MIL-DTL-38999 Series III Type

233-212-07 Jam-nut bulkhead feed-thru

Part Number Development									
Sample Part Number	**233-212**	**-07**	**NF**	**17-8**	**P**	**N**	**S**	**N**	**-01**
Series / Basic Part No.	**233-212** = SuperNine Environmental Bulkhead Feed-thru								
Connector Style	**07** = Jam-nut Receptacle								
Finish*	**NF** = Cadmium Olive Drab **ME** = Electroless Nickel **MT** = Nickel PTFE **ZR** = Black Zinc Nickel Contact factory for additional finish options								
Shell Size-Insert Arrangement*	Per MIL-STD-1560, see page 54 for supported layouts; see note 7								
Contact Type (Panel Side) See Note 1	**P** = Pin, gold, 500 Cycles **S** = Socket, gold, 500 Cycles								
Alternate Polarization* (Panel Side)	**A**, **B**, **C**, **D**, **E**, **N** = Normal, **U** = Universal								
Contact Type (Flange Side) See Note 1	**P** = Pin, gold, 500 Cycles **S** = Socket, gold, 500 Cycles								
Alternate Polarization* (Flange Side)	**A**, **B**, **C**, **D**, **E**, **N** = Normal, **U** = Universal								
Panel Accommodation	See Panel Accommodation Table								

***Refer to Section A for complete details**

Dimensions							
Shell Size Code	**Shell Size**	**A Thd**	**Ø B**	**C Sq**	**D Flat**	**E Thd ISO Metric**	**F**
A	9	.6250 -0.1P-0.3L-TS-2A	1.200 (30.48) 1.178 (29.92)	1.078 (27.38) 1.048 (26.62)	.654 (16.61) .645 (16.38)	M17 X 1.0-6g	.122 (3.10) .083 (2.11)
B	11	.7500 -0.1P-0.3L-TS-2A	1.386 (35.20) 1.362 (34.59)	1.268 (32.21) 1.236 (31.39)	.755 (19.18) .745 (18.92)	M20 X 1.0-6g	
C	13	.8750 -0.1P-0.3L-TS-2A	1.512 (38.40) 1.488 (37.80)	1.390 (35.31) 1.358 (34.49)	.942 (23.93) .932 (23.67)	M25 X 1.0-6g	
D	15	1.0000-0.1P-0.3L-TS-2A	1.638 (41.61) 1.614 (41.00)	1.516 (38.51) 1.484 (37.69)	1.066 (27.08) 1.056 (26.82)	M28 X 1.0-6g	
E	17	1.1875 -0.1P-0.3L-TS-2A	1.764 (44.81) 1.740 (44.20)	1.642 (41.71) 1.610 (40.89)	1.191 (30.25) 1.181 (30.00)	M32 X 1.0-6g*	
F	19	1.2500 -0.1P-0.3L-TS-2A	1.949 (49.50) 1.925 (48.90)	1.827 (46.41) 1.795 (45.59)	1.316 (33.43) 1.306 (33.17)	M35 X 1.0-6g	.153 (3.89) .114 (2.90)
G	21	1.3750 -0.1P-0.3L-TS-2A	2.075 (52.71) 2.051 (52.10)	1.953 (49.61) 1.921 (48.79)	1.441 (36.60) 1.431 (36.35)	M38 X 1.0-6g	
H	23	1.5000 -0.1P-0.3L-TS-2A	2.201 (55.91) 2.177 (55.30)	2.079 (52.81) 2.047 (51.99)	1.566 (39.78) 1.556 (39.52)	M41 X 1.0-6g	
J	25	1.6250 -0.1P-0.3L-TS-2A	2.323 (59.00) 2.299 (58.39)	2.205 (56.01) 2.173 (55.19)	1.691 (42.95) 1.681 (42.70)	M44 X 1.0-6g	

* Modified major diameter 31.95 - 31.80 (1.257 - 1.252).

© 2022 Glenair, Inc • 1211 Air Way, Glendale, CA 91201 • 818-247-6000 • www.glenair.com • U.S. CAGE code 06324 • SuperNine® Catalog
Dimensions in Inches (millimeters) are subject to change without notice.

Rev. 06.19.24

SuperNine® Environmental Series

MIL-DTL-38999 Series III Type

233-212-07 Jam-nut bulkhead feed-thru



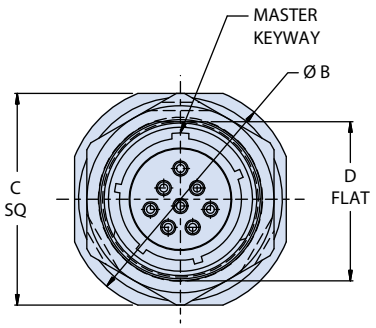

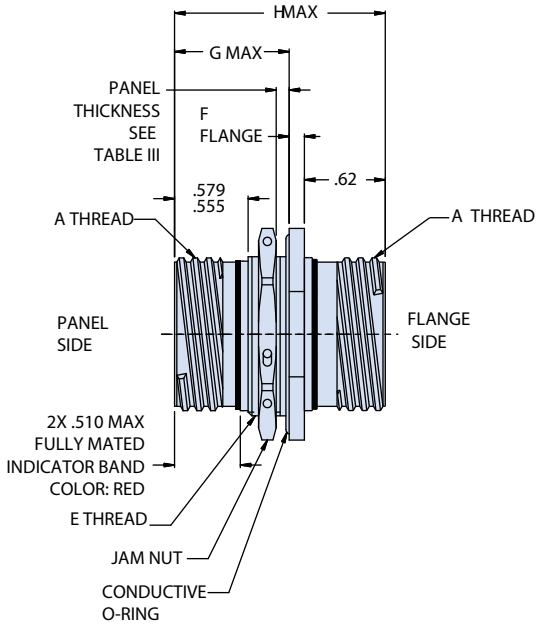

Panel Accommodation			
Sym	Panel Thickness	G Max	H Max
01	.125 (3.18) .062 (1.57)	.890 (22.61)	1.70 (43.18)
02	.250 (6.35) .062 (1.57)	1.015 (25.78)	1.83 (46.48)
03	.500 (12.70) .062 (1.57)	1.265 (32.13)	2.08 (52.83)

NOTES:

1. 233-212-07 feed-thru connector is designed to meet or exceed the mechanical, dimensional, electrical, and environmental requirements of MIL-DTL-38999, D38999/24, and MIL-STD-1560 except as shown and/or noted. Feed-thru mates with any QPL manufacturer's MIL-DTL-38999, series III plug connector, D38999/26, having the same shell size, insert arrangement, and polarization.
2. For pin/pin and socket/socket, symmetrical layouts only, consult factory for available symmetrical insert arrangements.
3. Power to a given contact on one end will result in power to a given contact directly opposite, regardless of identification letter. Alternate polarization 'U' is a non-standard/non-mil-spec option, allows mating to any QPL manufacturers MIL-DTL-38999 connector, intended for use in testing facilities.
4. Electrical safety limits must be established by user. Peak voltage, switching surge, transient, etc. should be used to determine the safety application.
5. Signal/power inserts only, see Section C, part number 233-277 for size 8 cavity options.
6. Material/finish
   - Shell, jam-nut: see part number development table, finish
   - contacts: copper alloy/gold plated
   - insulators: high-grade rigid dielectric/N.A.
   - seals: fluorosilicone blend/N.A.
   - O-ring: silver plated aluminum in fluorosilicone (cho-seal 1298 or equivalent)

© 2022 Glenair, Inc • 1211 Air Way, Glendale, CA 91201 • 818-247-6000 • www.glenair.com • U.S. CAGE code 06324 • SuperNine® Catalog
Dimensions in Inches (millimeters) are subject to change without notice.



SuperNine® PWM

Aerospace-grade connectors for PWM and other high-voltage, high-temperature applications



High-voltage power connectors optimized for pulse width modulation applications (PWM) require unique capabilities including the ability to withstand PWM inverter electrical stresses far different from standard 50/60 Hz AC conditions. Designed in collaboration with the Clean Sky Consortium, Glenair SuperNine® PWM power connectors have been optimized for PWM switch frequencies, 1000V working voltages, and temperature range tolerance from -65° to +200°C. In addition to its high-performance, heavy gold crimp power contacts, the SuperNine® PWM features stainless steel connector shells and temperature-tolerant PEEK (polyetheretherketone) dielectric inserts. Engineered contact-to-contact spacing and contact-to-shell grounding contributes to this connector's unique capability in MEA (More Electric Aircraft) and other power-intensive commercial and military applications.



SuperNine® PWM is the latest offering in Glenair's high-performance MIL-DTL-38999 Series III connector family. Glenair is a qualified (QPL) supplier of MIL-DTL-38999 Series III connectors (EN3645-001: 23 type). SuperNine® rolls up many of the technology advances Glenair has pioneered in our commercial environmental, hermetic, and filter D38999 connectors from our over 60 years in the interconnect industry.



SuperNine® is intermateable with all industry-standard D38999 solutions and accommodates Glenair's broad range of connector designator "H" backshells, protective covers, shrink boots and lightweight composite accessories.

- **1000 VAC RMS/VDC working voltage**
- **IAW EN3645-001: 23**
- **Certified for Clean Sky PWM inverters**
- **SuperNine® high-performance MIL-DTL-38999 type**
- **High-vibration / anti-decoupling performance**
- **Shell-to-shell grounding plus integral EMI grounding fingers**
- **High-temperature tolerant PEEK inserts**
- **Heavy gold-plated size #8 power crimp contacts**
- **Wide range of supported cables**
- **Available strain relief and shield termination backshells**

SuperNine® Environmental Series

MIL-DTL-38999 Series III Type

Pulse Width Modulation (PWM) connectors IAW EN3645-01:23

TECHNICAL CHARACTERISTICS AND MATERIALS

- Shell size according to EN3645-001: 23
- Four size #8 crimp contacts
- Working voltage: 1000 Vac RMS/Vdc
- Voltage proof test: see table below
- Contact current rating (4 contacts loaded): 125A @20°C; 70A @ 135°C
- Max. contact resistance: 2 mΩ
- Min. insulating resistance: 5000 MΩ
- Working temperature (continuous): (-65 to +200) °C
- Max. working temperature for short time (60s): 260°C
- Max. ambient temperature: 135°C
- IP rating (mated): IP67 IAW EN 60529
- 500 mating cycles

Materials	
Component	**Material**
Contacts	High Conductivity Copper Alloy Gold Over Nickel Plated
Insert	Plastic Peek Material
Interfacial Seal and Grommet	Silicone Elastomer
Metallic Parts	Passivated Stainless Steel

ELECTRICAL PERFORMANCE

Voltage Proof Test		
	Rating	
Pressure	**Mated (Vac RMS)**	**Unmated (Vac RMS)**
Sea Level	3000	3000
12.1 kPa (15000 meters)	1000	900
4.7 kPa (21000 meters)	1000	540
1.1 kPa (30000 meters)	1000	270

Voltage Proof with Partial Discharge Measurement	
Description	**Requirement**
Measurement of partial discharge (one minute at 1.5 kVac RMS)	< 10 pC
PDIV (Partial discharge ignition voltage)	> 1080 Vac RMS
PDEV (Partial discharge extinction voltage)	> 950 Vac RMS

ALTERNATE POLARIZATIONS IAW MIL-DTL-38999 SERIES III

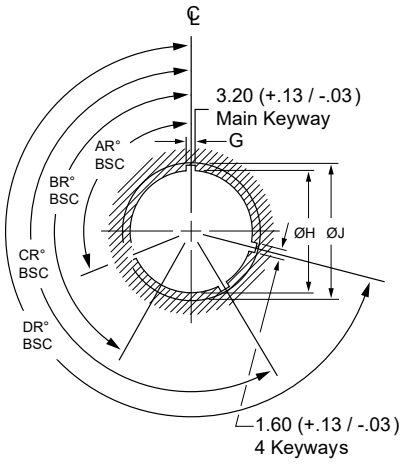

Alternate Key and Keyway Receptacles

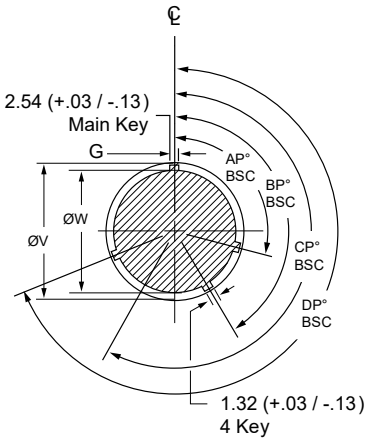

Alternate Key and Keyway Plugs

Series III Alternate Key and Keyway Polarization					
Shell Size	**Key and Keyway Code**	**AR° or AP° BSC**	**BR° or BP° BSC**	**CR° or CP° BSC**	**DR° or DP° BSC**
23	N	80	142	196	293
	A	135	170	200	310
	B	49	169	200	244
	C	66	140	200	257
	D	62	145	180	280
	E	79	153	197	272

© 2022 Glenair, Inc • 1211 Air Way, Glendale, CA 91201 • 818-247-6000 • www.glenair.com • U.S. CAGE code 06324 • SuperNine® Catalog
Dimensions in Inches (millimeters) are subject to change without notice.

SuperNine® Environmental Series

MIL-DTL-38999 Series III Type IAW EN3645-01:23

233-230-G6 Pulse Width Modulation plug connector

PLUG CONNECTOR



Part Number Development						
Sample Part Number	**233-230**	**-G6**	**Z1**	**23R48**	**P**	**N**
Product Series	**233-230** = uperNine HV					
Connector Style	**G6** = Plug, with EMI spring					
Finish	**Z1** = CRES, passivated					
Insert Arrangement	**23R48**					
Contact Type	**A** = Less pin contacts **P** = Pin		**B** = Less socket contacts **S** = Socket			
Alternate Polarization	**A**, **B**, **C**, **D**, **E**, **N** = Normal (IAW MIL-DTL-38999 Series III) See page 3					

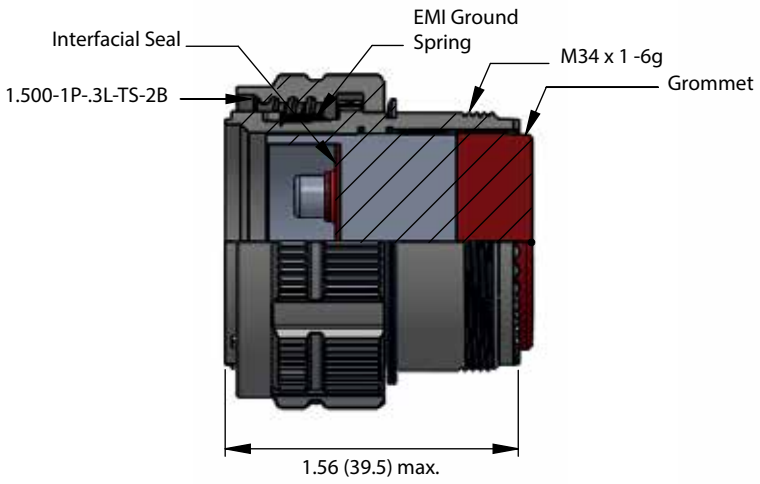

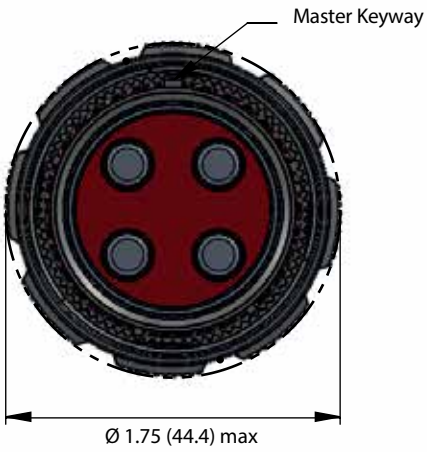

Materials	
Item	**Material**
Interfacial Seal	Silicone Elastomer
Spring EMI Contact	Copper Alloy
Plug	Passivated Stainless Steel
Coupling Nut with Ratched Spring	Passivated Stainless Steel
Retaining Ring	Stainless Steel
Pin Insert	Thermoplastic
Contact Retaining Clip	Copper Alloy
Seal Grommet	Silicone Elastomer
Ring Retaining Insert	Thermoplastic
Pin Crimp Contact	Gold Plated Copper Alloy

© 2022 Glenair, Inc • 1211 Air Way, Glendale, CA 91201 • 818-247-6000 • www.glenair.com • U.S. CAGE code 06324 • SuperNine® Catalog
Dimensions in Inches (millimeters) are subject to change without notice.

SuperNine® Environmental Series

MIL-DTL-38999 Series III Type IAW EN3645-01:23

233-230-00 Pulse Width Modulation receptacle connector

SQUARE FLANGE RECEPTACLE CONNECTOR



Part Number Development						
Sample Part Number	**233-230**	**-00**	**Z1**	**23R48**	**P**	**N**
Product Series	**233-230** = SuperNine HV					
Connector Style	**00** = Receptacle, square flange with slotted holes					
Finish	**Z1** = CRES, passivated					
Insert Arrangement	**23R48**					
Contact Type	**A** = Less pin contacts **P** = Pin		**B** = Less socket contacts **S** = Socket			
Alternate Polarization	**A**, **B**, **C**, **D**, **E**, **N** = Normal (IAW MIL-DTL-38999 Series III) See page 3					

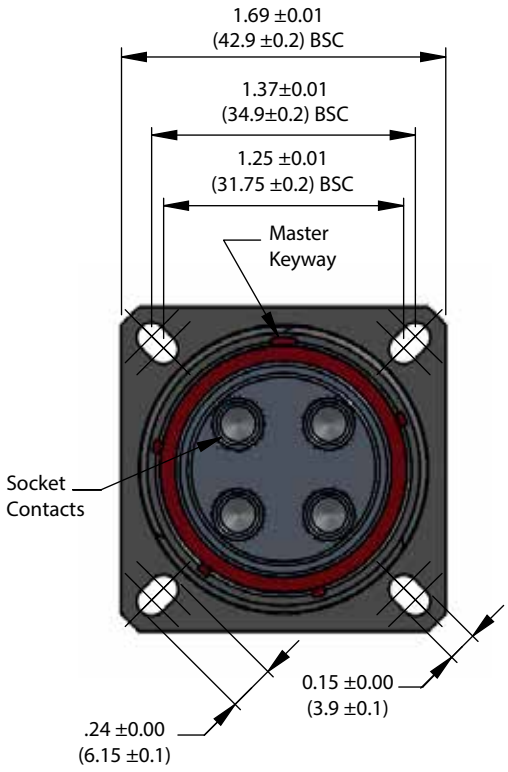

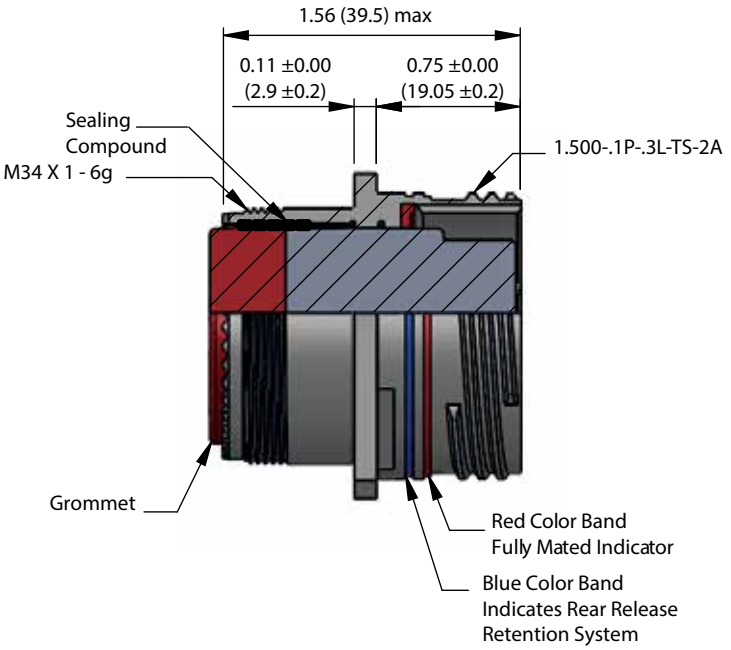

Materials	
Item	**Material**
Pheripheral Seal	Silicone Elastomer
Receptacle	Passivated Stainless Steel
Socket Insert	Thermoplastic
Contact Retaining Clip	Copper Alloy
Ring Retaining Insert	Thermoplastic
Seal Grommet	Silicone Elastomer
Socket Crimp Contact	Gold Plated Copper Alloy, Stainless Steel Hood

© 2022 Glenair, Inc • 1211 Air Way, Glendale, CA 91201 • 818-247-6000 • www.glenair.com • U.S. CAGE code 06324 • SuperNine® Catalog
Dimensions in Inches (millimeters) are subject to change without notice.

SuperNine® Environmental Series

MIL-DTL-38999 Series III Type IAW EN3645-01:23

Pin and socket contacts for Pulse Width Modulation connectors

CONTACTS

Glenair has developed new high-performance contacts for high-voltage / high-temperature applications made from high electrical conductivity copper alloy with outstanding mechanical performance up to 260°C (excursions). Special heavy gold plating resists corrosion, improves mating cycle durability, and contributes to high-temperature application requirements. Contacts are terminated to wire using precision crimp tools, and are snapped into place by hand or with a handheld insertion tool. Damaged or miswired contacts may be removed from the connector using standard extraction tools.

PIN CONTACT



High temperature pin contact, gold plated. Terminate to wire with standard crimp tools. IAW SAE AS39029.

Contact Type	Conductor Size	Part Number
Pin	#8	10-13033-102-8PG122

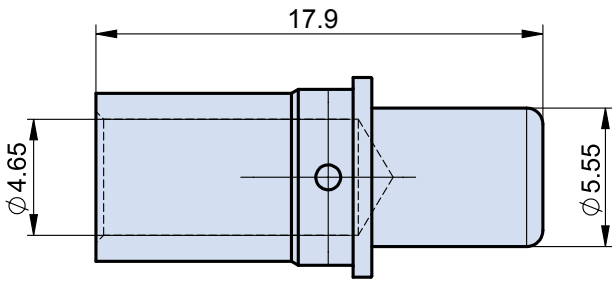

SOCKET CONTACT



High temperature socket contact, gold plated, passivated CRES hood. Terminate to wire with standard crimp tools. IAW SAE AS39029.

Contact Type	Conductor Size	Part Number
Socket	#8	10-13033-103-8SG122-H

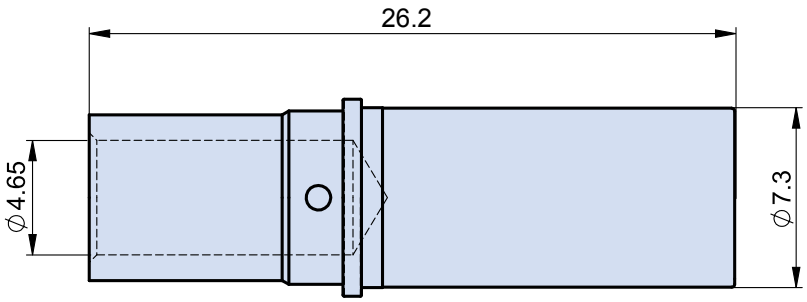

© 2022 Glenair, Inc • 1211 Air Way, Glendale, CA 91201 • 818-247-6000 • www.glenair.com • U.S. CAGE code 06324 • SuperNine® Catalog
Dimensions in Inches (millimeters) are subject to change without notice.

SuperNine® Environmental Series

MIL-DTL-38999 Series III Type IAW EN3645-01:23

Assembly tools for Pulse Width Modulation connectors

PNEUMATIC CRIMP TOOL FOR SIZE #8 POWER CONTACTS EXPLODED VIEW

The Daniels WA23 pneumatic crimp tool size #8 sets the standard for heavy-duty crimping. This four-indent tool accommodates large power contacts ranging from size #8 through size 0000. Die plates and locators are purchased separately. Qualified to M22520/23, the WA23 tool is specified for use with SAE AS39029 closed barrel copper alloy contacts.

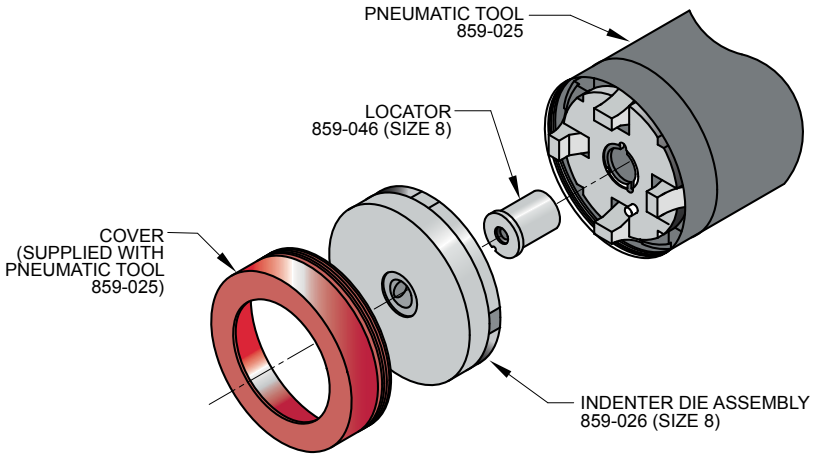

PNEUMATIC CRIMP TOOL

Bench-mount heavy-duty pneumatic indent crimp tool. Four-indent crimp termination. Use with closed barrel contact sizes 8 through 4/0. Attach to air supply with quick-disconnect fitting or install 1/4 NPT fitting into tapped port. 90-120 psi air supply. Requires die assembly and locator, sold separately. Hand actuate with push-button valve trigger on handle. Steel with black wrinkle enamel coating. 13 inches overall length, 9.2 inches tall, 17 pounds (7.7 Kg).

Description	Part Number	Military Part Number	Daniels Part Number
Pneumatic Crimper	859-025	M22520/23-01	WA23

DIE ASSEMBLY FOR SIZE #8 CONTACTS

Indenter Die Assembly. Precision four-indent die with hardened tool steel indenters, stainless steel housing, aluminum cap. Use with size #8 contacts. Go/No Go calibration dimensions are stamped on face of tool. Approximately 3.3 inches (84 mm.) diameter.

Description	Part Number	Military Part Number	Daniels Part Number
Die Assembly, Size #8	859-026	M22520/23-02	WA23-2

LOCATOR FOR SIZE #8 CONTACTS

Aluminum locator holds contact at correct depth for crimping.

Description	Part Number	Military Part Number	Daniels Part Number
Locator, #8, Special	859-046	(none)	WA23-395L

© 2022 Glenair, Inc • 1211 Air Way, Glendale, CA 91201 • 818-247-6000 • www.glenair.com • U.S. CAGE code 06324 • SuperNine® Catalog
Dimensions in Inches (millimeters) are subject to change without notice.

ADVANCED PERFORMANCE

SuperNine® Environmental Series

MIL-DTL-38999 Series III Type IAW EN3645-01:23

TurboFlex® aerospace-grade power cable for PWM connectors



Ultra-flexible rope lay construction

TurboFlex® cable is constructed from highly flexible conductors and high-performance insulation for optimized flexibility, durability, and weight reduction. Amazingly durable and flexible—especially in cold weather—the 16 AWG to 450 MCM TurboFlex cable features high strand count rope lay inner conductors made with tin-, nickel- and silver-plated copper. TurboFlex is jacketed with Glenair's unique low-smoke, zero-halogen Duralectric™ compound that provides outstanding flexibility and resistance to environmental and chemical exposure.

Part Number Development					
Sample Part Number	**961**	**–001**	**–T**	**–G**	**–2**
Basic No.	**961** = TurboFlex with Duralectric Jacket				
Wall Thickness	**001** = .125" **002** = .093" **003** = .062" **004** = .032"				
Conductor Material	**T** = Tin/Copper (-60 -150°C) **S** = Silver/Copper (-60 -200°C) **N** = Nickel/Copper (-60 -260°C)				
Wire Size (See Table I)	See Table I: -001 = **G, H, I, J, K, L** -002 = **D, E, F, G, H, I, J, K, L** -003 = **A, B, C, D, E, F, G, H** -004 = **R, S, A, B, C, D, E, F, G**				
Duralectric Jacket Color	See Table II				

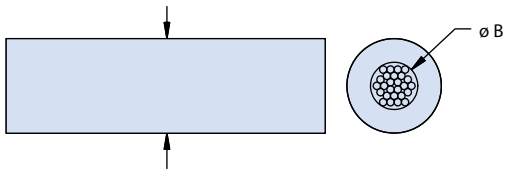

ø A (according to wall thickness code selected)

Voltage Ratings	
961-004	2000 VAC
961-003	3000 VAC
961-002	3500 VAC
961-001	4500 VAC

Table I: TurboFlex Wire Size, Dimensions, DC Resistance and Ampacity Ratings

AWG Code	AWG	Strand / Count / AWG	Cir Mil (nom)	Ø B in. (mm)	DC Resistance @ 20°C (Ohms / 1000 ft.)			Ampacity (Amps) 40°C Ambient	
					Nickel Copper	Tin Copper	Silver Copper	Nickel Copper	Tin/Silver Copper
R	16	7 X 15 X 36	2625	.0 63 (1.60)	4.5510	4.5930	4.2780	40	36
S	14	7 X 24 X 36	4200	.080 (2.03)	2.8450	2.8710	2.6740	59	54
A	12	7 X 37/36	6475	.099 (2.51)	1.8450	1.8620	1.7340	78	68
B	10	7 X 59/36	10325	.126 (3.20)	1.1570	1.1680	1.0880	107	90
C	8	7 X 95/36	16625	.159 (4.04)	.7188	.7252	.6755	142	124
D	6	7 X 150/36	26250	.200 (5.08)	.4551	.4593	.4278	205	165
E	4	7 X 7 X 34/36	41650	.271 (6.88)	.2979	.3006	.2800	278	220
F	2	7 X 7 X 54/36	66150	.342 (8.69)	.1876	.1893	.1763	381	293
G	1/0	7 X 7 X 86/36	105350	.431 (10.95)	.1178	.1188	.1107	532	399
H	2/0	7 X 7 X 108/36	132300	.483 (12.27)	.0938	.0946	.0882	591	467
I	3/0	19 X 7 X 51/36	169575	.547 (13.89)	.0738	.0745	.0694	708	546
J	4/0	19 X 7 X 64/36	212800	.613 (15.57)	.0588	.0594	.0553	830	629
K	250 MCM	19 X 7 X 75/36	249375	.663 (16.84)	.0479	.0483	.0450	910	705
L	450 MCM	19 X 7 X 135/36	448875	.890 (22.61)	.0266	.0263	.0250	1320	1020

NOTES

1. Bend radius is 3X the outer diameter
2. Cable will be marked with "Glenair TurboFlex", wire gauge, part number, CAGE code.
3. Jacket thickness tolerance is ±10% (±.005 for 961-004)Notes
4. Duralectric™ environmental performance
5. Temperature rating: -60°C to 260°C
6. Halogen free per IEC 60614-1
7. Accelerated weathering and simulated solar radiation at ground level per IEC 60068-2-5; 56 Days exposure, suitable for greater than 50 years of service in direct sunlight
8. Flame resistant per IEC 60614-1
9. Flame resistant per UL 1685, section 12 (FT4/IEEE120), vertical-tray fire-propagation and smoke release test
10. Flame resistant per far 25.853 (A) amendment 25-116, appendix F part I

© 2022 Glenair, Inc • 1211 Air Way, Glendale, CA 91201 • 818-247-6000 • www.glenair.com • U.S. CAGE code 06324 • SuperNine® Catalog
Dimensions in Inches (millimeters) are subject to change without notice.

ADVANCED PERFORMANCE

SuperNine® Environmental Series

MIL-DTL-38999 Series III Type IAW EN3645-01:23

TurboFlex® aerospace-grade power cable for PWM connectors

961-001 TURBOFLEX, .125 WALL, 4500 VAC

961-001 Wire Weight and Outer Diameter			
AWG Code	Weight lbs/1000 ft. (nom.)	Ø A In. (mm)	Jacket wall thickness In. (mm)
G	494.50	.681 (17.30)	.125 (3.18)
H	600.00	.733 (18.62)	
I	749.50	.797 (20.24)	
J	916.00	.863 (21.92)	
K	1055.60	.913 (23.19)	
L	1806.20	1.140 (28.96)	

961-002 TURBOFLEX, .093 WALL , 3500 VAC

961-002 Wire Weight and Outer Diameter			
AWG Code	Weight lbs/1000 ft. (nom.)	Ø A In. (mm)	Jacket wall thickness In. (mm)
D	138.40	.386 (9.80)	.093 (2.36)
E	207.40	.457 (11.61)	
F	304.60	.528 (13.41)	
G	455.80	.617 (15.67)	
H	558.20	.649 (16.48)	
I	703.90	.733 (18.62)	
J	866.50	.799 (20.29)	
K	1003.10	.849 (21.56)	
L	1740.10	1.076 (27.33)	

961-003 TURBOFLEX, .062 WALL , 3000 VAC

961-003 Wire Weight and Outer Diameter			
AWG Code	Weight lbs/1000 ft. (nom.)	Ø A In. (mm)	Jacket wall thickness In. (mm)
A	40.20	.223 (5.66)	.062 (1.57)
B	56.20	.250 (6.35)	
C	81.00	.283 (7.19)	
D	117.90	.324 (8.23)	
E	182.80	.395 (10.03)	
F	275.90	.466 (11.84)	
G	422.00	.555 (14.10)	
H	521.40	.607 (15.42)	

961-004 TURBOFLEX, .032 WALL , 2000 VAC

961-004 Wire Weight and Outer Diameter			
AWG Code	Weight lbs/1000 ft. (nom.)	Ø A In. (mm)	Jacket wall thickness In. (mm)
R	14.40	.127 (3.23)	.032 (.81)
S	20.70	.144 (3.66)	
A	29.40	.163 (4.14)	
B	43.90	.190 (4.83)	
C	66.90	.223 (5.66)	
D	101.40	.264 (6.71)	
E	162.40	.335 (8.51)	
F	251.60	.406 (10.31)	
G	392.70	.495 (12.57)	

(A) (1) (i), 60 second vertical burn test

11. Limiting oxygen index of 45 per ISO 4589-2:1999
12. Low smoke per NES 711, smoke density of 11.75
13. Smoke density class F1 per NF F 16-101 IAW Din EN 60695-2-11:2011
14. Low smoke toxicity per NES 713, tested value of 1.9
15. Fungus rating of 0 per MIL-STD-810g method 508.5, Does not support fungal growth
16. ASTM D624, die B tear strength, 150 pounds per inch minimum on jacket material
17. Low outgassing per ASTM e595 after post curing, .06%, CVCM .006%, WVR .02%
18. Resistant to fluids per MIL-STD-810F, method 504
19. JP-8 per MIL-DTL-83133 (NATO type 34)
    MIL-H-5606 hydraulic fluid
    MIL-PRF-23699 lubricating oil
    MIL-C-85570 cleaner
    TT-I-735 Isopropyl alcohol
    AMS 1432 potassium acetate deicing/anti-icing fluid
    MIL-C-87252 coolant
    Amerex AFF fire extinguishing foam

Jacketing Options		
Weatherproof, halogen free, flame resistant, functional to 260°C		
0	Black	Fed-Std-595C #17038
1	Desert Tan	Fed-Std-595C #33446
2	Red	Fed-Std-595C #11120
3	Orange	Fed-Std-595C #12300
4	Yellow	Fed-Std-595C #13591
5	Green	Fed-Std-595C #14193
6	Blue	Fed-Std-595C #15125
7	Violet	Fed-Std-595C #17142
8	Gray	Fed-Std-595C #26270
9	White	Fed-Std-595C #17875
Consult factory for other specific Fed Std colors		
Abrasion Resistance		Good
Wear Resistance		Good
Flame Resistance		Excellent
Sunlight Resistance		Excellent
Flex Resistance		Excellent

© 2022 Glenair, Inc • 1211 Air Way, Glendale, CA 91201 • 818-247-6000 • www.glenair.com • U.S. CAGE code 06324 • SuperNine® Catalog
Dimensions in Inches (millimeters) are subject to change without notice.



ENVIRONMENTAL SERIES 23

Space-Grade Guidelines for SuperNine® Connectors

Outgassing

Space flight equipment requires low-outgassing components in order to prevent degradation to optics and other sensitive instruments. SuperNine® connectors contain nonmetallic materials such as rubber, plastic, adhesives and potting compounds which can give off gasses when subjected to a vacuum or high heat. Unless the connector is specially processed, the TML and CVCM can exceed allowable limits. The space industry has adopted a standardized test procedure, ASTM E595, to evaulate outgassing properties. The MIL-DTL-38999 specification Class G also details specific TVM and CVCM values in addition to finish specifications. In Glenair's 186T process, for example, connectors and connector materials are heated to 175° C at a vacuum of 5 X 10^{-6} Torr for 48 hours. Items under test are then weighed to calculate the Total Mass Loss (TML), which may not exceed 1.0% of the total initial mass. A collector plate is used to determine the Collected Volatile Condensable Material (CVCM), which may not exceed 0.1% of the total original specimen mass for Class G rated connectors. Glenair is able to offer outgas processing which assures all materials comply with their respective standards.

Note on Connector Material and Finish Options

Some types of metals are prohibited for space flight. "Pure Tin, Cadmium and Zinc shall not be used as a final finish on EEE parts." (NASA EEE-INST-002 Instructions for EEE Parts Selection, Screening, Qualification, and Derating). NASA recommends electroless nickel or gold finish on connector shells and gold finish for contacts.

- **SuperNine® environmental series connectors may be subjected to outgas processing and/or NASA screening IAW MIL-DTL-38999 Class G**
- **Modification codes are a convenient way to specify outgassing / screening requirements per NASA specifications and/or D38999 Class G**
- **Cadmium and silver finish are prohibited in space**
- **Specify electroless nickel finish on connector shells and gold finish on contacts**

ADVANCED PERFORMANCE

SuperNine® Environmental Series

MIL-DTL-38999 Series III Type

Class G and NASA space-grade guidelines

NASA and Class G Screening

The MIL-DTL-38999 specification defines TML and CVCM values for Class G space flight. Glenair modification code 186T assures parts are outgassed to meet the Class G requirements for outgassing. Additionally, NASA recommends that connectors for space flight be specially screened. NASA EEE-INST-002 instructions for EEE parts selection, screening, qualification, and derating contains three levels of screening for space-grade components. These outgassing and screening modification codes are listed at right. To add a modification code append code to end of part number: *253-016-00ME25-35PNMS-**429C***.

- **"Mission critical" connectors for space flight should undergo rigorous 100% final inspection**
- **Modification codes are available to invoke special screening for both MIL-DTL-38999 and NASA applications**
- **Outgassing properties of materials used in Glenair SuperNine® connectors are detailed in the table below**

Screening Level and Available Outgassing Modification Codes				
Screening Level	Screening Only	48 Hour Oven Bake 175° C	Thermal Vacuum Outgassing (10^{-6} Torr) 24 Hour 125° C	Thermal Vacuum Outgassing (10^{-6} Torr) 48 Hour 175° C
NASA, Level 1 Highest Reliability	429B	429J	429C	
NASA, Level 2 High Reliability	429	429K	429A	429AA
NASA, Level 3 Standard Reliability	Use Standard Part Number		429L	
38999, Class G or H (Group A and B inspection, no screening)				186T

Table II: NASA EEE-INST-02, Table 2A Screening Levels			
Inspection	Level 1	Level 2	Level 3
Visual	100%	100%	100%
Mechanical	2(0)	2(0)	
Dielectric Withstanding Voltage	2(0)	2(0)	
Insulation Resistance	2(0)	2(0)	
Contact Engagement & Separation Force	2(0)		
Hermeticity (Sealed Receptacles Only)	100%	100%	
Coupling Force	2(0)		

Required inspection quantity shown. Number in parenthesis indicates acceptance of failures allowed for all quantities inspected.

Outgassing Properties of Materials Used in MIL-DTL-38999 Type SuperNine® Connectors				
Component	Material	TML %	CVCM %	Test Reference
Front and Rear Insulator	Epiall 1908	0.84	0.0	NASA Test # GSC15435 (48 hours at 180°C)
Rear Grommet, Interfacial Seal, Peripheral Seal, and Special Auxiliary Seals	Blended fluorosilicone/silicone elastomer	0.04	0.0	Glenair test
Front-To-Rear Insulator Bonding Material	Eccobond 104 A/B	0.52	0.08	Emerson & Cuming Data Sheet
Insulator-to-Rubber Bonding Material	RTV, per MIL-A-46146	<1.0	<0.1	Glenair Test
White Epoxy Ink for Silk-screening	Markem 7224 White	0.49	0.03	NASA Test #GSC19899
Potting Compound	High-performance space-grade epoxy	<1.0	<0.1	Glenair Test

MIL-DTL-38999 Type SuperNine® Connector Materials Approved for Space Flight		
Component	Material	Notes
Shells, Coupling Nuts, Jam Nuts	Aluminum alloy	Approved for Space Flight
Rigid Insulators	Glass reinforced thermoset plastic, Epiall 1908	Approved for Space Flight
Contact Retention Clip	Beryllium copper, heat-treated, unplated	Approved for Space Flight
Grommet, Peripheral Seal, Interfacial Seal, Special Auxiliary Seals, O-ring	Blended fluorosilicone/silicone elastomer	Requires outgassing processing
Pin/Socket Contact	Gold plated beryllium copper alloy	Approved for Space Flight
Socket Contact Hood	Stainless steel	Approved for Space Flight
Potting Compounds and Adhesives	RTV and epoxies	Requires outgassing processing

© 2022 Glenair, Inc • 1211 Air Way, Glendale, CA 91201 • 818-247-6000 • www.glenair.com • U.S. CAGE code 06324 • SuperNine® Catalog
Dimensions in Inches (millimeters) are subject to change without notice.



SuperNine®

Space-Grade Circular Blind-Mate Connectors



Application: Glenair Series 253 blind-mate connectors are designed to meet applicable environmental, electrical and mechanical performance characteristics of D38999 Series III. The technology is well suited for use in commercial rack-and-panel instrumentation applications, as well as a blind-mate solution for satellite deployment, scientific research and development payloads, interstage, UAV, and munitions release and more.

- **Blind-mate, fixed and float-mount interconnects for non-ITAR commercial as well as military/defense applications**
- **Adjustable separation force, AKA assisted-release, zero extraction force (ZEF) solutions**
- **Misalignment accommodation and special auxiliary sealing for trouble-free blind mating in space applications**
- **Available in most symmetrical MIL-STD-1560 insert arrangements with contacts sizes from #23 to #8**
- **Selected materials offer low outgassing properties and high resistance to both corrosion and stress corrosion cracking**
- **NASA outgassing bake-out process available**
- **Designed to withstand the rigors of launch and flight—including shock, vibration, thermal vacuum, acceleration, and temperature extremes**
- **Standard accessory threads and teeth per MIL-DTL-38999 accommodate a wide range of backshell accessories**
- **Crimp-removable contacts standard. Consult factory for PC tails, dual-flange standoffs, custom blind-mate configurations, and hermetically sealed options**

Current Rating	
Size Contact	Amps
23	5
22D	5
20	7.5
16	13
12	23

Unmated Test Voltages, AC RMS, 60 Hz				
Altitude (Feet)	Service Rating M	Service Rating N	Service Rating I	Service Rating II
Sea Level	1300	1000	1800	2300
50,000	550	400	600	800
70,000	350	260	400	500
100,000	200	260	200	200

ADVANCED PERFORMANCE

SuperNine® Environmental Series

MIL-DTL-38999 Series III Type

Space-grade float-mount / adjustable separation force blind mates

CRITICAL MECHANICAL FEATURES OF BLIND-MATE AND ADJUSTABLE SEPARATION FORCE (ZEF) CONNECTORS



Roll-off nose: allows for the smooth disconnection of blind mate plugs and receptacles. Without this feature, connectors can catch or hang during mate and demate.

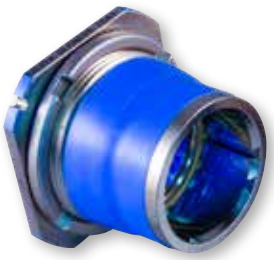

Float mounting: allows for a modicum of coplanar movement of the receptacle during rack-and-panel and other blind mate applications, preventing both contact and shell damage.



Misalignment accommodation: Additional radial, axial, and angular misalignment during mating is accounted for in the receptacle design with integral wave springs.



Sealing: Misalignment accommodation makes environmental sealing difficult in blind-mate connectors. The problem is solved with auxiliary external seals.

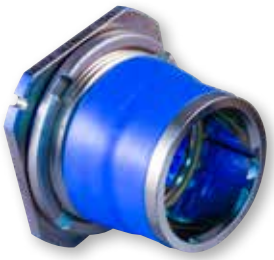



EMI shielding: Glenair incorporates ground springs in receptacle connectors as well as grounding fingers in special coupling nut-equipped plugs (253-018-G6 feed-thru shown) to optimize 360° shell-to-shell continuity.





Assisted separation force: Glenair supplies two styles of spring-loaded blind-mate connectors. **Adjustable kick-off styles** feature spring-loaded posts on the plug and an adjustment ring on the receptacle used to calibrate separation force. A second style uses wave springs on the shell body.

Available non-ITAR environmental blind-mate and adjustable separation force solutions		
Basic Part No.	**Description**	**Mates With**
253-014	Fixed jam-nut and square flange mount plug with roll-on/roll-off nose and accessory threads	253-015
253-015	Floating jam-nut and square flange mount receptacle with misalignment accommodation and optional sealing	253-014
253-016	Fixed wall mount plug with spring assist (zero separation force)	253-017
253-017	Floating wall mount receptacle with adjustable separation force and misalignment accommodation	253-016
253-018-07	Blind-mate feed-thru, jam-nut mount plug with B-side D38999 type receptacle mating interface and assisted kick-off (spring force)	253-019
253-018-G6	Blind-mate in-line feed-thru with B-side D38999 type plug mating interface and assisted kick-off (spring force)	253-019
253-019	Floating jam-nut mount receptacle with misalignment accommodation and optional sealing	253-018
253-031	Blind-mate jam-nut mount plug with kick-off spring and accessory threads	253-032
253-032	Floating jam-nut mount receptacle with misalignment accommodation	253-031
253-033	Float mount feed-thru, jam nut mount receptacle to 38999 type Series III plug mating interface	253-019
253-025	Locking circuit and test mate connector	253-016

© 2022 Glenair, Inc • 1211 Air Way, Glendale, CA 91201 • 818-247-6000 • www.glenair.com • U.S. CAGE code 06324 • SuperNine® Catalog
Dimensions in Inches (millimeters) are subject to change without notice.

ADVANCED PERFORMANCE

SuperNine® Environmental Series

MIL-DTL-38999 Series III Type space-grade blind-mate

253-014, 253-015 Jam-nut mount plug and receptacle



Part Number Development								
Sample Part Number	**253-014**	**-07**	**ME**	**25-35**	**P**	**N**	**NS**	**H**
Series / Basic Part No.	**253** = Blind-mate **-014** = Plug (fixed mount) **-015** = Receptacle (float mount)							
Connector Style	**07** = Jam nut mount; contact factory for wall mount receptacles							
Material/Finish	**ME** = Aluminum, electroless nickel **ZL** = CRES, electrodeposited nickel **MT** = Aluminum, nickel PTFE **Z1** = CRES, passivated							
Shell Size - Insert Arrangement*	Per MIL-STD-1560; symmetrical layouts only, consult factory for complete details							
Contact Type	**P** = Pin, crimp removable **S** = Socket, crimp removable **A** = Pin insert, less contacts **B** = Socket insert, less contacts							
Alternate Polarization	**A, B, C, D, E, N** = Normal (Polarization for intermateability with 253-014 is per MIL-DTL-38999 Series I)							
Non Sealing	**NS** = Non-Sealing (omit for external elastomer seal version, applies to 253-015 only)							
Jam-Nut Type	**H** = Hex **S** = Spanner with wire holes (applies to 015 only)							

***Refer to section A for complete details.** Refer to Space-Grade Guidelines material (IAW NASA EEE INST-002) for outgassing and screening modification codes, on pages 60 and 61. Modification codes may be added directly to the end of any valid part number

253-014 FIXED JAM-NUT MOUNT PLUG WITH ROLL-ON/ROLL-OFF NOSE AND ACCESSORY THREADS

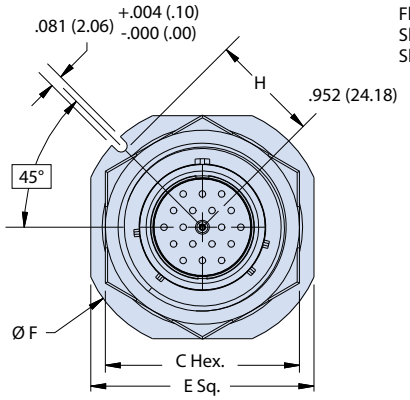

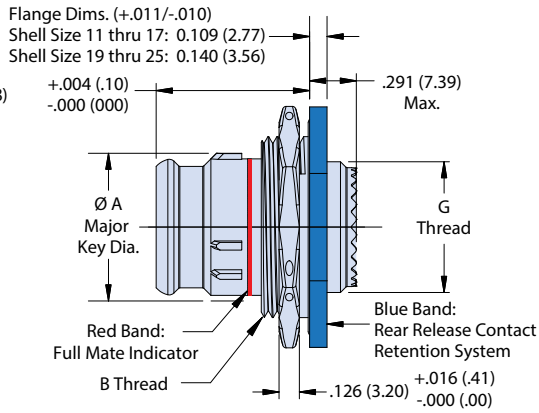

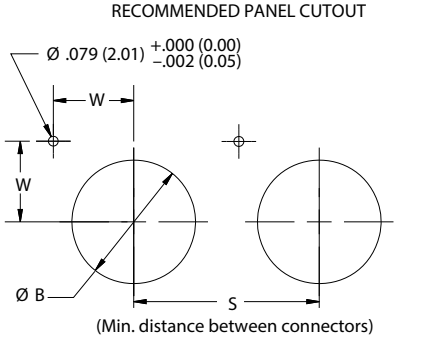

253-014 Dimensions							
Shell Size	A Max Dia.	Thread B Class 2A	C Max	E (±.016)	F Max Dia.	G Thread Class 2A	H (+0/-.008)
11	.673 (17.09)	.8125-20 UNEF	1.016 (25.81)	1.250 (31.75)	1.386 (35.20)	.5625-24	.604 (15.34)
13	.798 (20.27)	1.0000-20 UNEF	1.181 (30.00)	1.375 (34.92)	1.511 (38.38)	.6875-24	.666 (16.92)
15	.923 (23.44)	1.1250-18 UNEF	1.300 (33.02)	1.500 (38.10)	1.636 (41.55)	.8125-20	.729 (18.52)
17	1.048 (26.62)	1.2500-18 UNEF	1.457 (37.01)	1.625 (41.28)	1.761 (44.73)	.9375-20	.791 (20.09)
19	1.173 (29.79)	1.3750-18 UNEF	1.575 (40.00)	1.812 (46.02)	1.949 (49.50)	1.0625-18	.893 (22.68)
21	1.298 (32.97)	1.5000-18 UNEF	1.693 (43.00)	1.938 (49.23)	2.073 (52.65)	1.1875-18	.955 (24.26)
23	1.423 (36.14)	1.6250-18 UNEF	1.880 (47.75)	2.062 (52.37)	2.200 (55.88)	1.3125-18	1.017 (25.83)
25	1.548 (39.32)	1.7500-18 UNS	2.016 (51.21)	2.187 (55.55)	2.323 (59.00)	1.4375-18	1.096 (27.84)

253-014 Recommended Panel Cutout Dimensions			
Shell Size	W	Diameter B ±.004	S
11	.460 (11.68)	0.821 (20.85)	1.282 (32.56)
13	.504 (12.80)	1.007 (25.58)	1.417 (35.99)
15	.549 (13.94)	1.134 (28.80)	1.559 (39.60)
17	.593 (15.06)	1.259 (31.98)	1.705 (43.31)
19	.665 (16.89)	1.384 (35.15)	1.850 (46.99)
21	.709 (18.01)	1.507 (38.28)	1.992 (50.60)
23	.753 (19.13)	1.634 (41.50)	2.134 (54.20)
25	.806 (20.47)	1.759 (44.68)	2.350 (59.69)

NOTES:

1. Glenair 253-014 is designed to mate with 253-015 with same insert arrangement.
2. Stainless steel locating pin to be shipped with connector
3. Misalignment capabilities are possible with 253-014, when mated to 253-015.
4. Contact manufacturer for outgassing options.
5. Material/finish
   - Shell, jam-nut: see P/N development, finish
   - Insulator: high grade rigid dielectric/N.A.
   - Seals: fluorosilicone blend/N.A.
   - contacts: copper alloy/gold plated

© 2022 Glenair, Inc • 1211 Air Way, Glendale, CA 91201 • 818-247-6000 • www.glenair.com • U.S. CAGE code 06324 • SuperNine® Catalog

Dimensions in Inches (millimeters) are subject to change without notice.

SuperNine® Environmental Series

MIL-DTL-38999 Series III Type space-grade blind-mate

253-014, 253-015 Jam-nut mount plug and receptacle

253-015 FLOATING JAM-NUT MOUNT RECEPTACLE WITH MISALIGNMENT ACCOMMODATION AND OPTIONAL SEALING

Connector Shown Includes Sealing Option

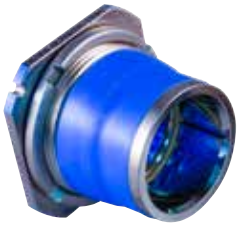

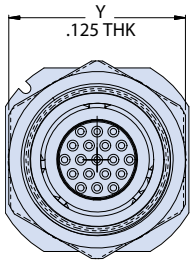

Hex Jam-nut

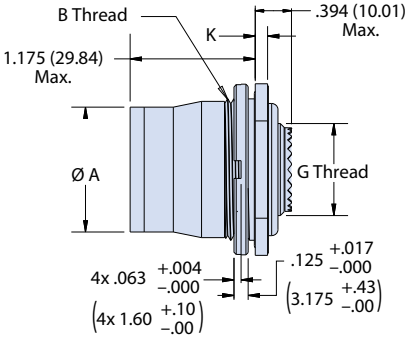

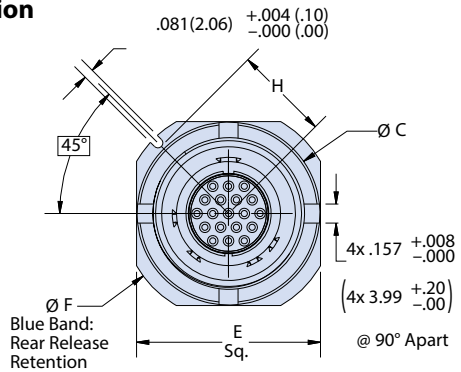

Spanner Jam-nut

253-015 Dimensions									
Shell Size	A Max Dia.	Thread B Class 2A	C Max.	Y Hex	E ±.016(.41)	F Max Dia.	G Thd Class 2A	K +.011/.010 (+.28/.25)	H +0/-.008 (+0/-.20)
11	.853 (21.67)	1.0000-20 UNEF	1.264 (32.11)	1.181 (30.00)	1.266 (32.16)	1.500 (38.10)	.5625-24	.109 (2.77)	.666 (16.92)
13	.978 (24.84)	1.1250-18 UNEF	1.388 (35.26)	1.300 (33.02)	1.391 (35.33)	1.641 (41.68)	.6875-24	.109 (2.77)	.729 (18.52)
15	1.103 (28.02)	1.2500-18 UNEF	1.512 (38.40)	1.457 (37.01)	1.516 (38.51)	1.750 (44.45)	.8125-20	.109 (2.77)	.791 (20.09)
17	1.228 (31.19)	1.3750-18 UNEF	1.638 (41.61)	1.575 (40.00)	1.641 (41.68)	1.938 (49.23)	.9375-20	.109 (2.77)	.893 (22.68)
19	1.353 (34.37)	1.5000-18 UNEF	1.823 (46.30)	1.693 (43.00)	1.828 (46.43)	2.062 (52.37)	1.0625-18	.140 (3.56)	.955 (24.26)
21	1.478 (37.54)	1.6250-18 UNEF	1.953 (49.61)	1.880 (47.75)	1.954 (49.63)	2.188 (55.58)	1.1875-18	.140 (3.56)	1.017 (25.83)
23	1.603 (40.72)	1.7500-18 UNS	2.075 (52.71)	2.010 (51.05)	2.078 (52.78)	2.312 (58.72)	1.3125-18	.140 (3.56)	1.080 (27.43)
25	1.728 (43.89)	1.8750-16 UNS	2.122 (53.90)	2.125 (53.97)	2.128 (54.05)	2.327 (59.11)	1.4375-18	.140 (3.56)	1.086 (27.58)

Distance between mated flanges.
For reference only
(not deliverable)

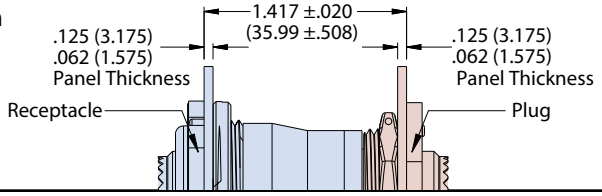

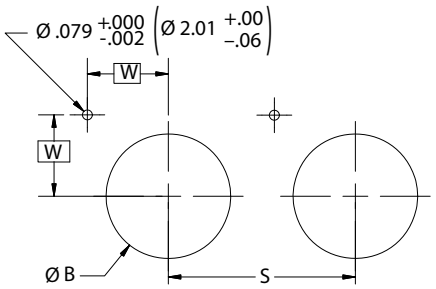

253-015 Misalignment Capabilities

Axial Misalignment

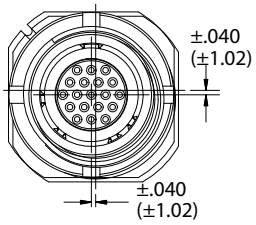

Angular Misalignment

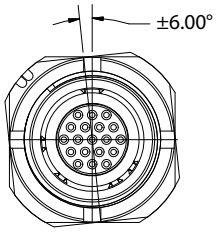

Reference Only (Not Deliverable)

Longitudinal Misalignment

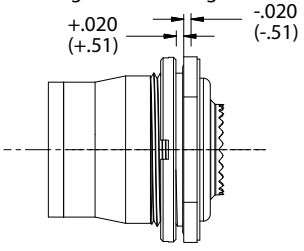

253-015 Recommended Panel Cutout Dimensions			
Shell Size	W	B Dia. ±.004 (.10)	S
11	.504 (12.80)	1.007 (25.58)	1.282 (32.56)
13	.549 (13.94)	1.134 (28.80)	1.417 (35.99)
15	.593 (15.06)	1.259 (31.98)	1.559 (39.60)
17	.665 (16.89)	1.384 (35.15)	1.705 (43.31)
19	.709 (18.01)	1.507 (38.28)	1.850 (46.99)
21	.753 (19.13)	1.634 (41.50)	1.992 (50.60)
23	.797 (20.24)	1.759 (44.68)	2.134 (54.20)
25	.799 (20.29)	1.884 (47.85)	2.262 (57.45)

© 2022 Glenair, Inc • 1211 Air Way, Glendale, CA 91201 • 818-247-6000 • www.glenair.com • U.S. CAGE code 06324 • SuperNine® Catalog
Dimensions in Inches (millimeters) are subject to change without notice.

SuperNine® Environmental Series

MIL-DTL-38999 Series III Type space-grade blind-mate

253-016, 253-017 Wall-nut mount plug and receptacle, ASF





Part Number Development								
Sample Part Number	**253-016**	**-00**	**ME**	**21–35**	**S**	**N**	**MS**	**A**
Series / Basic Part No.	**253** = Blind-mate connector with adjustable assisted separation force **–016** = Plug (fixed mount) **–017** = Receptacle (float mount)							
Connector Style	**-00** = Wall mount							
Material/Finish	**ME** = Aluminum, electroless nickel **ZL** = CRES, electrodeposited nickel **MT** = Aluminum, nickel PTFE **Z1** = CRES, passivated							
Shell Size-Insert Arrangement	Per MIL-STD-1560							
Contact Type	**P** = Pin, crimp removable **S** = Socket, crimp removable **A** = Pin Insert, less contacts **B** = Socket insert, less contacts							
Alternate Polarization	**A** = 40°, **B** = 65°, **C** = 80°, **D** = 210°, **E** =250°, **F** = 280°, **G** = 310°, **H**= 330°, **N** = 135° (Normal) Per L°							
Contact Type	**MS** = Military specification							
Adjustment Ring Material	(253-017 receptacle only) **A** = Aluminum **C** = Corrosion-resistant steel							

***Refer to section A for complete details.** Refer to Space-Grade Guidelines material (IAW NASA EEE INST-002) for outgassing and screening modification codes, on pages 60 and 61. Modification codes may be added directly to the end of any valid part number

253-016 FIXED WALL MOUNT PLUG WITH SPRING ASSIST (ZERO SEPARATION FORCE)

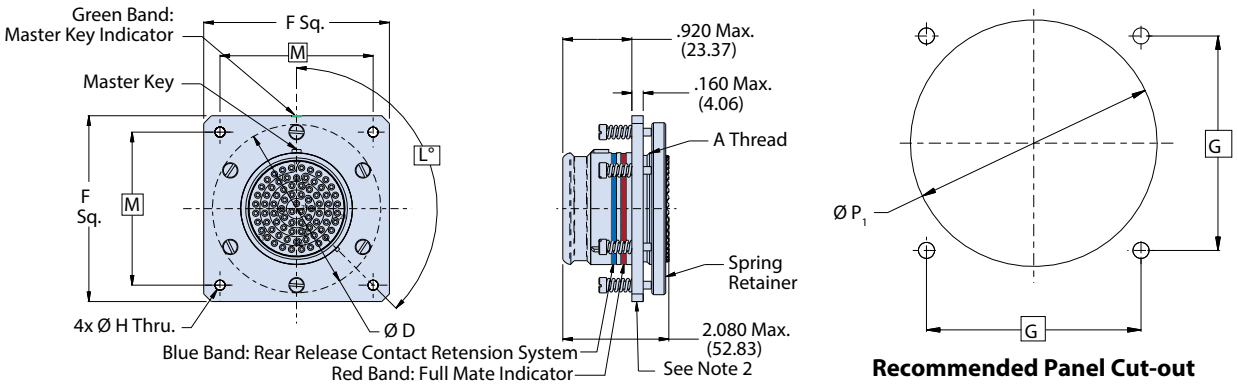

Recommended Panel Cut-out

Dimensions for 253-016 and 253-017									
Shell Size	**F Flange ±.010 (±.25)**	**M Square**	**Ø H ±.005 (±.13)**	**Ø D Max.**	**Ø E Max.**	**A Thread**	**Ø P_1 ±.005 (±.13)**	**Ø P_2 ±.005 (±.13)**	**G Square**
9	1.430(36.32)	1.150 (29.21)	.128(3.25)	1.250(31.75)	1.300 (33.02)	M12 X 1.0-6g-0.100R	1.300(33.02)	1.330 (33.78)	1.150 (29.21)
11	1.555(39.50)	1.200(30.48)	.128(3.25)	1.375(34.93)	1.425 (36.20)	M15 X 1.0-6g-0.100R	1.425(36.20)	1.455 (36.96)	1.200 (30.48)
13	1.680(42.67)	1.250(31.75)	.128(3.25)	1.500(38.10)	1.550 (39.37)	M18 X 1.0-6g-0.100R	1.550(39.37)	1.580 (40.13)	1.250 (31.75)
15	1.805(45.85)	1.375(34.93)	.128(3.25)	1.625(41.28)	1.675 (42.55)	M22 X 1.0-6g-0.100R	1.675(42.55)	1.705 (43.31)	1.375 (34.92)
17	1.930(49.02)	1.500(38.10)	.128(3.25)	1.750(44.45)	1.800 (45.72)	M25 X 1.0-6g-0.100R	1.800(45.72)	1.830 (46.48)	1.500 (38.10)
19	2.055(52.20)	1.625(41.28)	.128(3.25)	1.875(47.63)	1.925 (48.90)	M28 X 1.0-6g-0.100R	1.925(48.90)	1.955 (49.66)	1.625 (41.28)
21	2.180(55.37)	1.750(44.45)	.128(3.25)	2.000(50.80)	2.050 (52.07)	M31 X 1.0-6g-0.100R	2.050(52.07)	2.080 (52.83)	1.750 (44.45)
23	2.305(58.55)	1.875(47.63)	.154(3.91)	2.125(53.98)	2.175 (55.25)	M34 X 1.0-6g-0.100R	2.175(55.25)	2.205 (56.01)	1.875 (47.63)
25	2.430(61.72)	2.000(50.80)	.150(3.81)	2.250(57.15)	2.300 (58.42)	M37 X 1.0-6g-0.100R	2.300(58.42)	2.330 (59.18)	2.000 (50.80)

© 2022 Glenair, Inc • 1211 Air Way, Glendale, CA 91201 • 818-247-6000 • www.glenair.com • U.S. CAGE code 06324 • SuperNine® Catalog
Dimensions in Inches (millimeters) are subject to change without notice.

Rev. 06.19.24

SuperNine® Environmental Series

MIL-DTL-38999 Series III Type space-grade blind-mate

253-016, 253-017 Wall-nut mount plug and receptacle, ZEF

253-017 FLOATING WALL MOUNT RECEPTACLE WITH ADJUSTABLE SEPARATION FORCE AND MISALIGNMENT ACCOMMODATION

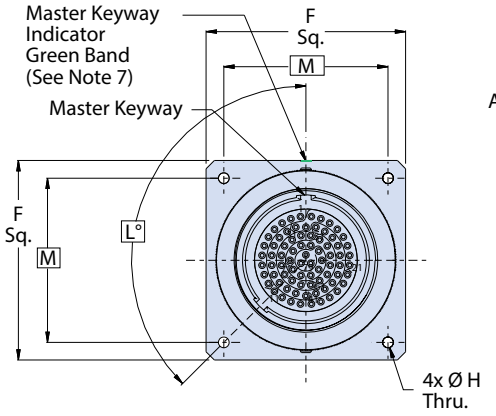

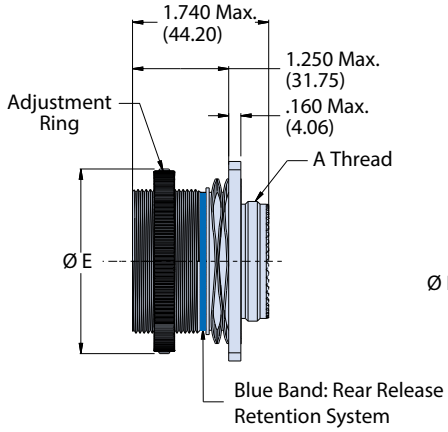

Recommended Panel Cut Out

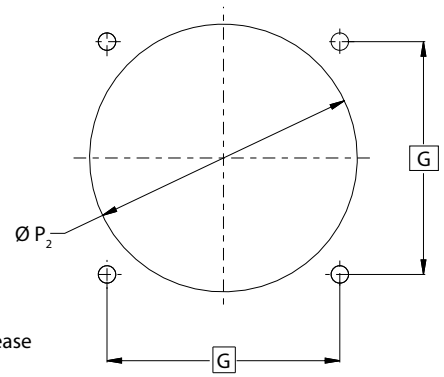

253-017 Misalignment Capabilities

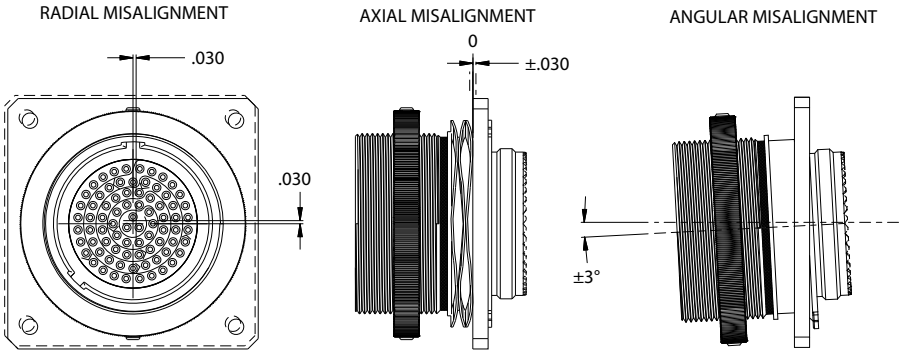

Adjustment Ring Geometry and Material Options

Contact manufacturer for other options

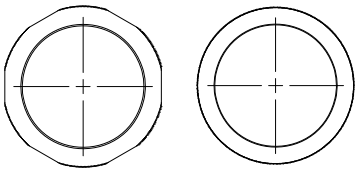

Corrosion Resistant (With Wrench Flats)

Al Alloy

Distance between mated flanges.
For reference only
(not deliverable)

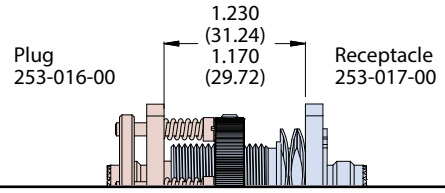

NOTES:

1. 253-017 mates with 253-016 fixed series.
2. Distance between mated mounting flanges: 1.170/1.230. Consult manufacturer other distance between mounting flanges is required
3. Separation force is adjustable ± 5 lbs when mated with 253-016 and 253-017 pairs have adjustable separation force of ±5 lbs
4. See Space-Grade guidelines material, in this section, for outgassing/screening options available
5. Spares: pin or socket contacts IAW AS39029 or per Glenair part number if controlled force contacts
6. Contact factory for PC tail versions
7. Material/finish
   - Shell (016 and 017), ring (017), retainer ring (016): see P/N development, finish
   - Wave spring(017), springs and spring retainer (016): CRES/ passivated
   - Insulators: high grade rigid dielectric/N.A.
   - Seals: fluorosilicone blend/N.A.

© 2022 Glenair, Inc • 1211 Air Way, Glendale, CA 91201 • 818-247-6000 • www.glenair.com • U.S. CAGE code 06324 • SuperNine® Catalog
Dimensions in Inches (millimeters) are subject to change without notice.

SuperNine® Environmental Series

MIL-DTL-38999 Series III Type space-grade blind-mate

253-018 bulkhead feed-thru, ZEF plug, D38999 B-side

Part Number Development						
Sample Part Number	**253-018**	**-07**	**ME**	**25-35**	**PP**	**N**
Series / Basic Part No.	**253-018** = Blind-mate feed-thru					
Connector Style	**-07** = Jam-nut mount, feed-thru plug (fixed) with rear D38999 type receptacle interface **-G6** = In-line plug with rear D38999 type plug interface and EMI spring					
Material/Finish	**ME** = Aluminum, electroless nickel **ZL** = CRES, electrodeposited nickel **MT** = Aluminum, nickel PTFE **Z1** = CRES, passivated					
Shell Size-Insert Arrangement*	Per MIL-STD-1560					
Contact Type	**PP** = Pin on both sides **BSDP** = Blind-mate side socket - D38999 side pin **SS** = Socket on both sides **BPDS** = Blind-mate side pin - D38999 side socket					
Alternate Polarization*	**A** = 40°, **B** = 65°, **C** = 80°, **D** = 210°, **E** =250°, **F** = 280°, **G** = 310°, **H**= 330°, **N** = 135° (Normal) Per L°. G6 only Refers to blind mate side. Plug/Receptacle side per MIL-DTL-38999					

***Refer to section A for complete details.** Refer to Space-Grade Guidelines material (IAW NASA EEE INST-002) for outgassing and screening modification codes, on pages 60 and 61. Modification codes may be added directly to the end of any valid part number

253-018-07 BLIND-MATE FEED-THRU, JAM-NUT MOUNT PLUG WITH B-SIDE D38999 TYPE RECEPTACLE MATING INTERFACE AND ASSISTED KICK-OFF (SPRING FORCE)



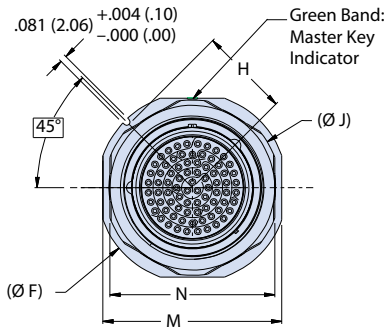

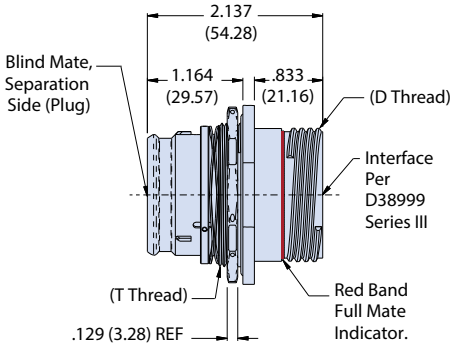

Dimensions							
Shell Size	**F Flange**	**H (End of Slot) [+0/-.008 (-.20)]**	**Ø J, Jam Nut**	**N, Jam Nut Flat**	**M, Flange Flats ±.010 (±.25)**	**T Thread Class 2A**	**D Thread 0.1P-0.3L-TS-2**
13	1.515 (38.48)	.666 (16.92)	1.375 (34.93)	1.175 (29.85)	1.430 (36.32)	1.000-20 UNEF	0.875 (22.23)
15	1.636 (41.55)	.729 (18.52)	1.500 (38.10)	1.300 (33.02)	1.500 (38.10)	1.125-18 UNEF	1.000 (25.40)
21	2.065 (52.45)	.955 (24.26)	1.875 (47.63)	1.688 (42.88)	1.930 (49.02)	1.500-18 UNEF	1.375 (34.92)
23	2.200 (55.88)	1.017 (25.83)	2.063 (52.40)	1.875 (47.63)	2.060 (52.32)	1.625-18 UNEF	1.500 (38.10)
25	2.316 (58.83)	1.096 (27.84)	2.141 (54.38)	2.010 (51.05)	2.180 (55.37)	1.750-18 UNS	1.625 (41.28)

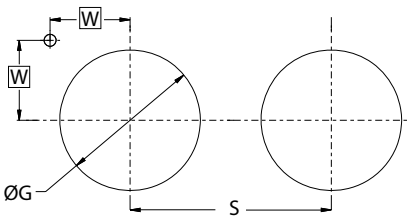

Panel Cut-Out			
Shell Size	**Ø G, Thru Hole ±.004**	**W (Basic)**	**S**
13	1.009 (25.63)	.504 (12.80)	1.460 (37.08)
15	1.134 (28.80)	.549 (13.94)	1.545 (39.24)
21	1.509 (38.33)	.709 (18.01)	1.995 (50.67)
23	1.634 (41.50)	.753 (19.13)	2.120 (53.85)
25	1.759 (44.68)	.809 (20.55)	2.315 (58.80)

© 2022 Glenair, Inc • 1211 Air Way, Glendale, CA 91201 • 818-247-6000 • www.glenair.com • U.S. CAGE code 06324 • SuperNine® Catalog
Dimensions in Inches (millimeters) are subject to change without notice.

SuperNine® Environmental Series

MIL-DTL-38999 Series III Type space-grade blind-mate

253-018 Bulkhead feed-thru, ZEF plug, D38999 B-side

253-018-G6 BLIND-MATE IN-LINE PLUG WITH B-SIDE D38999 TYPE PLUG MATING INTERFACE AND ASSISTED KICK-OFF (SPRING FORCE)

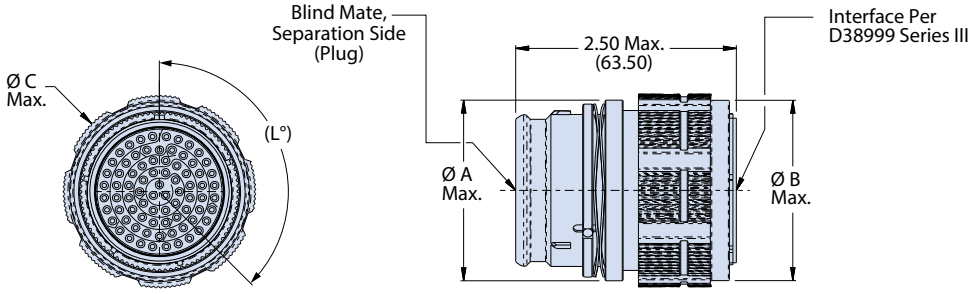

Dimensions for 253-018-G6 Plug			
Shell Size	Ø A Max	Ø B Max.	Ø C Max
11	.835 (21.21)	.855 (21.72)	1.000 (25.40)
13	1.020 (25.91)	1.025 (26.03)	1.175 (29.85)
15	1.145 (29.08)	1.155 (29.34)	1.295 (32.89)
23	1.645 (41.78)	1.645 (41.78)	1.765 (44.83)
25	1.770 (44.96)	1.770 (44.96)	1.890 (48.01)

Distance between mated flanges.
For reference only (not deliverable)

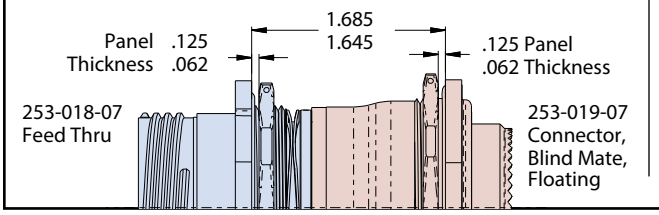

Distance between mated connectors.
For reference only (not deliverable)

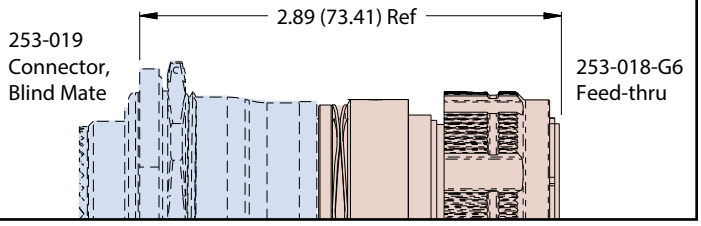

NOTES:

1. Mates with 253-019 and D38999 series III connectors with same insert arrangement and polarization
2. Distance between mated mounting flanges: 1.685/1.645. Consult manufacturer if other distance between mated mounting flanges is required
3. Misalignment capabilities are possible with mated pair reference Glenair connector 253-019.
4. See Space-Grade guidelines material, in this section, for outgassing/screening options available
5. Stainless steel locating pin (Ø.079) shipped with each -07 jam-nut receptacle connector
6. For feed-thru connector configurations that are either pin/pin or socket/socket, the position identification/ marking on the D38999 side of the connector will be as shown in MIL-STD-1560. The blind mate separation side will be the reverse identification marking
7. Blind mate side mates with 253-019 with reverse silkscreen marking for contact type PP (pin on both sides) or SS (socket on both sides)
8. Kick-off spring is not intended to offset all of the contact retention force for each insert arrangement
9. Material/finish
   - Shell, jam-nut coupling nut: see part number development, finish
   - Spring: CRES/passivated
   - Insulators: high grade rigid dielectric/N.A.
   - O-ring: fluorosilicone blend
   - Contacts: copper alloy/gold plated

© 2022 Glenair, Inc • 1211 Air Way, Glendale, CA 91201 • 818-247-6000 • www.glenair.com • U.S. CAGE code 06324 • SuperNine® Catalog
Dimensions in Inches (millimeters) are subject to change without notice.

Rev. 06.19.24

SuperNine® Environmental Series

MIL-DTL-38999 Series III Type space-grade blind-mate

253-019 Jam-nut receptacle, mates with 253-018 BFT

Part Number Development						
Sample Part Number	**253-019**	**-07**	**ME**	**25-35**	**S**	**N**
Series / Basic Part No.	**253-019** = Blind-mate receptacle for use with 253-018 & 253-053-07 bulkhead feed-thru					
Connector Mounting	**07** = Jam-nut mount (float mount), receptacle **007** = Jam-nut mount (float mount), receptacle; reverse silkscreen marking					
Material/Finish	**ME** = Aluminum, electroless nickel **ZL** = CRES, electrodeposited nickel **MT** = Aluminum, nickel PTFE **Z1** = CRES, passivated					
Shell Size-Insert Arrangement*	Per MIL-STD-1560; symmetrical layouts only, consult factory for complete details					
Contact Type	**S** = Socket, crimp removable **P** = Pin, crimp removable					
Alternate Polarization*	**A** = 40°, **B** = 65°, **C** = 80°, **D** = 210°, **E** =250°, **F** = 280°, **G** = 310°, **H**= 330°, **N** = 135° (Normal) Per L°. G6 only Refers to blind mate side. Plug/Receptacle side per MIL-DTL-38999					

***Refer to section A for complete details.** Refer to Space-Grade Guidelines material (IAW NASA EEE INST-002) for outgassing and screening modification codes, on pages 60 and 61. Modification codes may be added directly to the end of any valid part number

253-019 FLOATING JAM-NUT MOUNT RECEPTACLE WITH MISALIGNMENT ACCOMMODATION AND OPTIONAL SEALING: MATES WITH 253-018 BULKHEAD FEED-THRU



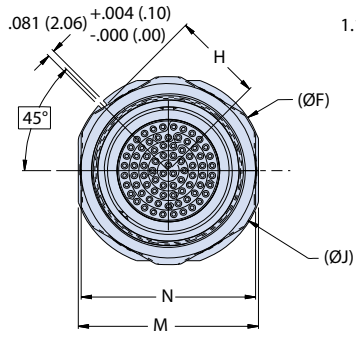

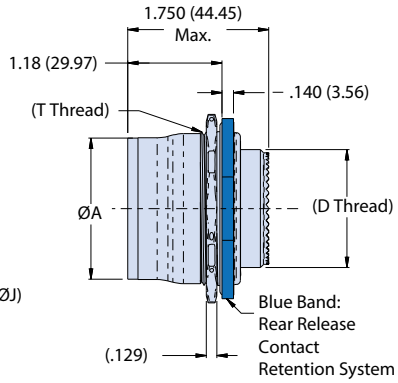

Dimensions for 253-019-07 Jam Nut Receptacle								
Shell Size	**F Flange**	**H (End of Slot) 0.0/-.008(0.0/-.20)**	**Ø J Jam Nut**	**N, Jam Nut Flat ±.010 (±.25)**	**M, Flange Flats ±.010 (±.25)**	**T Thread Class 2A**	**D Thread Class 2A**	**Ø A ±.010 (±.25)**
11	1.500 (38.10)	0.666 (16.92)	1.375 (34.93)	1.175 (29.85)	1.260 (32.00)	1.000-20 UNEF	.5625-24	0.845 (21.46)
13	1.640 (41.66)	0.729 (18.52)	1.500 (38.10)	1.300 (33.02)	1.390 (35.31)	1.125-18 UNEF	.6875-24	.970 (24.64)
15	1.750 (44.45)	0.791 (20.09)	1.625 (41.28)	1.450 (36.83)	1.515 (38.48)	1.250-18 UNEF	.8125-20	1.105 (28.07)
21	2.180 (55.37)	1.017 (25.83)	2.063 (52.40)	1.875 (47.63)	1.955 (49.66)	1.625-18 UNEF	1.1875-18	1.475 (37.47)
23	2.315 (58.80)	1.076 (27.33)	2.141 (54.38)	2.010 (51.05)	2.080 (52.83)	1.750-18 UNS	1.3125-18	1.595 (40.51)
25	2.330 (59.18)	1.100 (27.94)	2.300 (58.42)	2.125 (53.98)	2.195 (55.75)	1.875-16 UN	1.4375-18	1.720 (43.69)

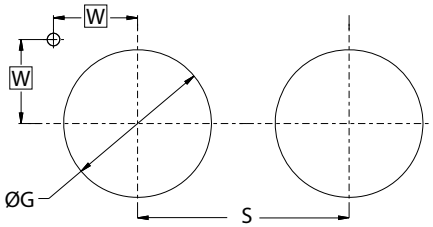

Table IV 253-019-07 Panel Cut-Out		
Shell Size	**Ø G, Thru-Hole ±.004**	**W (Basic)**
11	1.007 (25.58)	.504 (12.80)
13	1.134 (28.80)	.549 (13.94)
15	1.259 (31.98)	.593 (15.06)
21	1.634 (41.50)	.753 (19.13)
23	1.759 (44.68)	.797 (20.24)
25	1.884 (47.85)	.810 (20.57)

© 2022 Glenair, Inc • 1211 Air Way, Glendale, CA 91201 • 818-247-6000 • www.glenair.com • U.S. CAGE code 06324 • SuperNine® Catalog
Dimensions in Inches (millimeters) are subject to change without notice.

ADVANCED PERFORMANCE

SuperNine® Environmental Series

MIL-DTL-38999 Series III Type space-grade blind-mate

253-019 jam-nut receptacle, mates with 253-018 BFT

253-019 Misalignment Capabilities

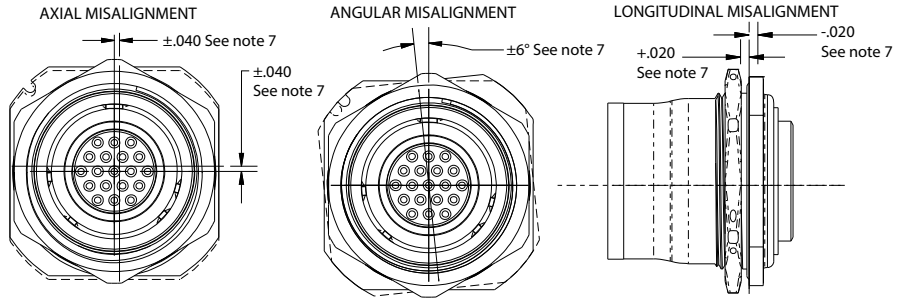

Distance between mated flanges.
For reference only
(not deliverable)

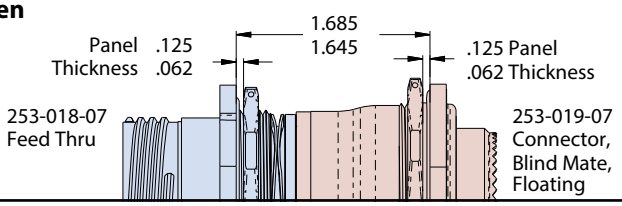

Distance between mated flanges.
For reference only
(not deliverable)

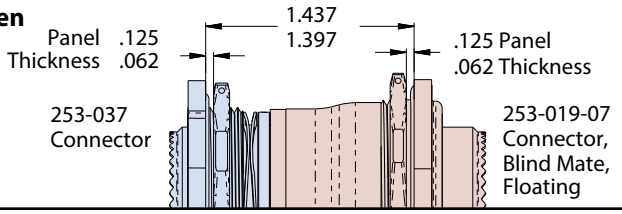

NOTES:

1. Connector mates with Glenair 253-018 and 253-037 fixed series connectors having same insert arrangement and polarization.
2. Distance between mated mounting flanges as shown. Consult manufacturer if other distance between mated mounting flanges is required.
3. Misalignment capability as shown.
4. See Space-Grade guidelines material, in this section, for outgassing/screening options available
5. Stainless steel locating pin (Ø.079) shipped with each connector
6. Contact factory for PC tail versions.
7. Dimensions and features are intended for customer use only. Dimensions are reference only and not measured during final inspection at factory.
8. Connector style 007, jam nut mount with reverse silkscreen marking is used when mating to 253-018 feed-thru connector that is contact type PP (pin on both sides) or SS (socket on both sides).
9. Hermetic version available (253-018-H7), consult factory for details
10. Material/finish
    - Shell, jam-nut: see part number development, finish
    - Spring: CRES/passivated
    - Insulators: high grade rigid dielectric/N.A.
    - Seals: fluorosilicone blend, silicone
    - Contacts: copper alloy/gold plated

© 2022 Glenair, Inc • 1211 Air Way, Glendale, CA 91201 • 818-247-6000 • www.glenair.com • U.S. CAGE code 06324 • SuperNine® Catalog
Dimensions in Inches (millimeters) are subject to change without notice.

SuperNine® Environmental Series

MIL-DTL-38999 Series III Type space-grade blind-mate

253-031 Jam-nut plug with assisted kick-off



Part Number Development						
Sample Part Number	**253-031**	**-07**	**ME**	**25-35**	**P**	**N**
Series / Basic Part No.	**253-031** Blind-mate plug with non-adjustable assisted separation					
Connector Mounting	**-07** = Fixed jam-nut mount plug					
Material/Finish	**ME** = Aluminum, electroless nickel; **ZL** = CRES, electrodeposited nickel; **MT** = Aluminum, nickel PTFE; **Z1** = CRES, passivated					
Shell Size-Insert Arrangement*	Per MIL-STD-1560					
Contact Type	**P** = Pin, crimp removable; **A** = Pin insert less contacts; **S** = Socket, crimp removable; **B** = Socket insert less contacts					
Alternate Polarization*	**A** = 40°, **B** = 65°, **C** = 80°, **D** = 210°, **E** =250°, **F** = 280°, **G** = 310°, **H** = 330°, **N** = 135° (Normal) Per L° BSC. Refers to blind mate side.					

***Refer to section A for complete details.** Refer to Space-Grade Guidelines material (IAW NASA EEE INST-002) for outgassing and screening modification codes, on pages 60 and 61. Modification codes may be added directly to the end of any valid part number

253-031 BLIND-MATE JAM-NUT MOUNT PLUG WITH KICK-OFF SPRING AND ACCESSORY THREADS

07 - Receptacle, Jam Nut Mount

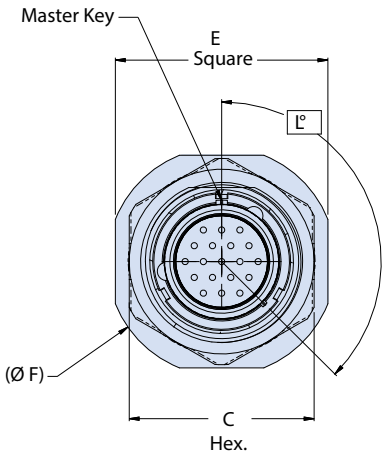

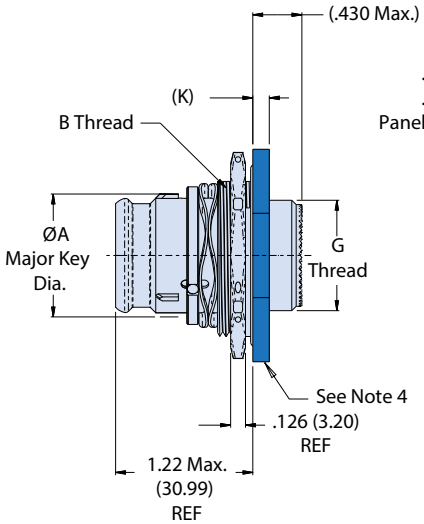

Mated Jam Mount Connectors

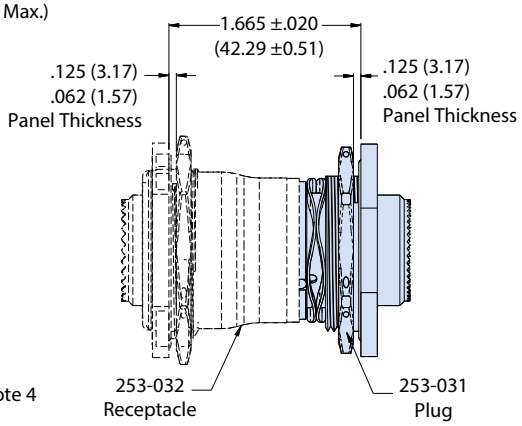

*Dimensions shown are for reference only and not intended to be verified during final inspection

NOTES:

1. Connector mates with Glenair 253-032 series connector, having the same insert arrangement and polarization.
2. Insert arrangement is in accordance with MIL-STD-1560 arrangements only. Contact manufacturer for availability.
3. See Space-Grade guidelines material, in this section, for outgassing/screening options available
4. Blue color band indicates rear release contact retention mechanism.
5. Kick-off spring is not intended to offset all of the contact retention force for each insert arrangement
6. Material/ finish:
   - Shell, jam-nut: see part number development table, finish
   - Insulators: high grade rigid dielectric / N.A.
   - Contacts: copper alloy/gold plated
   - O-ring: fluorosilicone blend / N.A.

© 2022 Glenair, Inc • 1211 Air Way, Glendale, CA 91201 • 818-247-6000 • www.glenair.com • U.S. CAGE code 06324 • SuperNine® Catalog
Dimensions in Inches (millimeters) are subject to change without notice.

SuperNine® Environmental Series

MIL-DTL-38999 Series III Type space-grade blind-mate

253-031 Jam-nut plug with assisted kick-off

Dimensions							
Shell Size	ØA Max	Thd B Class 2A	C Max	E ±.016(0.4)	ØF Max	G Thd Class 2A	K .011/-.010 (.28/.25)
11	.673 (17.09)	1.0000-20 UNEF	1.181 (30.00)	1.375 (34.92)	1.511 (38.38)	.5625-24	.109 (2.77)
13	.798 (20.27)	1.1250-18 UNEF	1.300 (33.02)	1.500 (38.10)	1.636 (41.55)	.6875-24	.109 (2.77)
15	.923 (23.44)	1.2500-18 UNEF	1.457 (37.01)	1.625 (41.28)	1.761 (44.73)	.8125-20	.109 (2.77)
17	1.048 (26.62)	1.3750-18 UNEF	1.575 (40.00)	1.812 (46.02)	1.949 (49.50)	.9375-20	.140 (3.56)
19	1.173 (29.79)	1.5000-18 UNEF	1.693 (43.00)	1.938 (49.23)	2.073 (52.65)	1.0625-18	.140 (3.56)
21	1.298 (32.97)	1.6250-18 UNEF	1.880 (47.75)	2.062 (52.37)	2.200 (55.88)	1.1875-18	.140 (3.56)
23	1.423 (36.14)	1.7500-18 UNS	2.016 (51.21)	2.187 (55.55)	2.323 (59.00)	1.3125-18	.140 (3.56)
25	1.548 (39.32)	1.8750-16 UNS	2.125 (53.97)	2.312 (58.72)	2.448 (62.18)	1.4375-18	.140 (3.56)



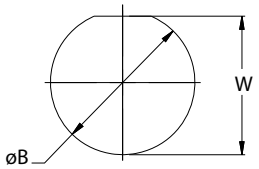

Recommended Panel Cutout		
Shell Size	Ø B .010/-.000 (0.25/.00)	W +.000/-.010 (.00/-.25)
11	1.010	0.955
13	1.135	1.085
15	1.260	1.210
17	1.385	1.335
19	1.510	1.460
21	1.635	1.585
23	1.760	1.710
25	1.885	1.835

© 2022 Glenair, Inc • 1211 Air Way, Glendale, CA 91201 • 818-247-6000 • www.glenair.com • U.S. CAGE code 06324 • SuperNine® Catalog
Dimensions in Inches (millimeters) are subject to change without notice.

SuperNine® Environmental Series

MIL-DTL-38999 Series III Type space-grade blind-mate

253-032 jam-nut receptacle, mates with 253-031 plug

Part Number Development							
Sample Part Number	**253-032**	**-07**	**ME**	**25-35**	**S**	**N**	**NS**
Series / Basic Part No.	**253-032** = Blind-mate receptacle for use with 253-031plug						
Connector Mounting	**-07** = Floating jam nut mount receptacle						
Material/Finish	**ME** = Aluminum, electroless nickel **ZL** = CRES, electrodeposited nickel **MT** = Aluminum, nickel PTFE **Z1** = CRES, passivated						
Shell Size-Insert Arrangement*	Per MIL-STD-1560; Symmetrical layouts only, consult factory for complete details.						
Contact Type	**P** = Pin, crimp removable **A** = Pin insert less contacts **S** = Socket, crimp removable **B** = Socket insert less contacts						
Alternate Polarization*	**A** = 40°, **B** = 65°, **C** = 80°, **D** = 210°, **E** =250°, **F** = 280°, **G** = 310°, **H**= 330°, **N** = 135° (Normal) Per L° BSC. Refers to blind mate side.						
Non Sealing	**NS** = Non-Sealing (omit for external elastomer seal version)						

***Refer to section A for complete details.** Refer to Space-Grade Guidelines material (IAW NASA EEE INST-002) for outgassing and screening modification codes, on pages 60 and 61. Modification codes may be added directly to the end of any valid part number

253-032 FLOATING JAM-NUT MOUNT RECEPTACLE WITH MISALIGNMENT ACCOMMODATION; MATES WITH 253-031 ONLY

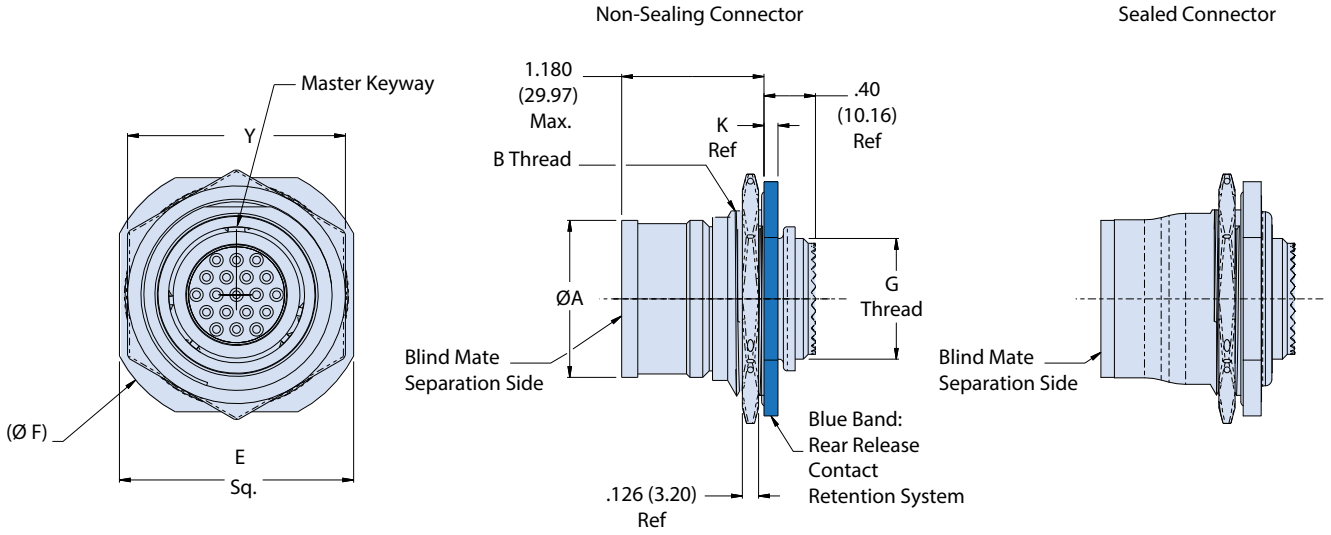

NOTES:

1. Connector mates with Glenair 253-031 series connector, having the same insert arrangement and polarization.
2. Insert arrangement is in accordance with MIL-STD-1560 arrangements only. Contact manufacturer for availability.
3. Misalignment capabilities are possible when mated with Glenair connector 253-031
4. See Space-Grade guidelines material, in this section, for outgassing/ screening options available
5. Material/ finish:
   - Shell, flange, jam-nut: see part number development, finish
   - Wave spring: CRES 17-7PH/passivate
   - Insulators: high grade rigid dielectric/N.A.
   - Contacts: copper alloy/gold plated
   - O-ring: fluorosilicone blend/N.A.

© 2022 Glenair, Inc • 1211 Air Way, Glendale, CA 91201 • 818-247-6000 • www.glenair.com • U.S. CAGE code 06324 • SuperNine® Catalog
Dimensions in Inches (millimeters) are subject to change without notice.

ADVANCED PERFORMANCE

SuperNine® Environmental Series

MIL-DTL-38999 Series III Type space-grade blind-mate

253-032 Jam-nut receptacle, mates with 253-031 plug

Misalignment Capabilities

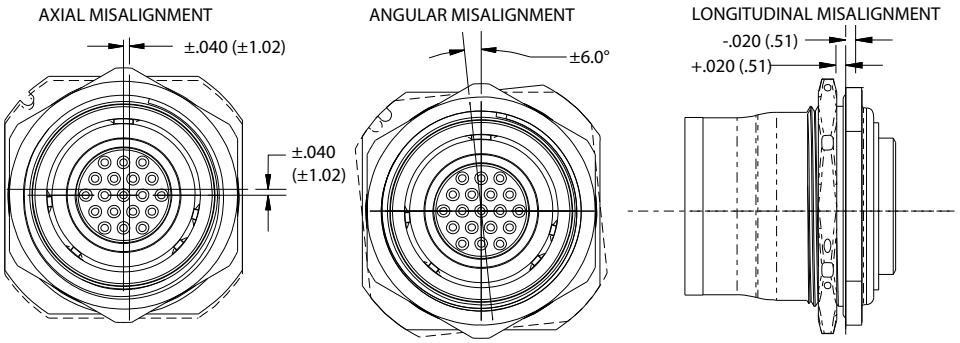

Distance between mated flanges.
For reference only
(not deliverable)

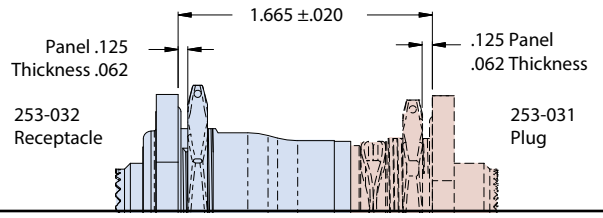

Dimensions							
Shell Size	ØA Max	B Thd, Class 2A	Y Hex	E ±.016 (0.41)	Ø F Max	Thd G, Class 2A	K .011/-.010 (0.28/ 0.25)
11	.853 (21.67)	1.1250-18 UNEF	1.300 (33.02)	1.391 (35.33)	1.641 (41.68)	.5625-24	.109 (2.77)
13	.978 (24.84)	1.2500-18 UNEF	1.457 (37.01)	1.516 (38.51)	1.750 (44.45)	.6875-24	.109 (2.77)
15	1.103 (28.02)	1.3750-18 UNEF	1.575 (40.00)	1.641 (41.68)	1.938 (49.23)	.8125-20	.109 (2.77)
17	1.228 (31.19)	1.5000-18 UNEF	1.693 (43.00)	1.828 (46.43)	2.062 (52.37)	.9375-20	.140 (3.56)
19	1.353 (34.37)	1.6250-18 UNEF	1.880 (47.75)	1.954 (49.63)	2.188 (55.58)	1.0625-18	.140 (3.56)
21	1.478 (37.54)	1.7500-18 UNS	2.010 (51.05)	2.078 (52.78)	2.312 (58.72)	1.1875-18	.140 (3.56)
23	1.603 (40.72)	1.8750-16 UNS	2.125 (53.98)	2.128 (54.05)	2.327 (59.11)	1.3125-18	.140 (3.56)
25	1.728 (43.89)	2.0000-16 UN	2.334 (59.28)	2.253 (57.23)	2.452 (62.28)	1.4375-18	.140 (3.56)

Recommended Panel Cutout		
Shell Size	Ø B .010/-.000 (0.25/.00)	W +.000/-.010 (.00/-.25)
11	1.135 (28.83)	1.085 (27.56)
13	1.260 (32.00)	1.210 (30.73)
15	1.385 (35.18)	1.335 (33.91)
17	1.510 (38.35)	1.460 (37.08)
19	1.635 (41.53)	1.585 (40.26)
21	1.760 (44.70)	1.710 (43.43)
23	1.885 (47.88)	1.835 (46.61)
25	2.010 (51.05)	1.960 (49.78)

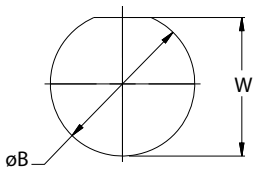

© 2022 Glenair, Inc • 1211 Air Way, Glendale, CA 91201 • 818-247-6000 • www.glenair.com • U.S. CAGE code 06324 • SuperNine® Catalog
Dimensions in Inches (millimeters) are subject to change without notice.

ADVANCED PERFORMANCE

SuperNine® Environmental Series

MIL-DTL-38999 Series III Type space-grade blind-mate

253-033 Bulkhead feed-thru jam-nut receptacle, D38999 B-side

Part Number Development						
Sample Part Number	**253-033**	**-07**	**ME**	**25-35**	**PP**	**N**
Series / Basic Part No.	**253-033** = Floating jam-nut mount, feed-thru receptacle with rear D38999 Series III plug interface. Receptacle interface also available, contact factory					
Connector Style	**-07** = Jam-nut mount, float mount					
Material/Finish	**ME** = Aluminum, electroless nickel **ZL** = CRES, electrodeposited nickel **MT** = Aluminum, nickel PTFE **Z1** = CRES, passivated					
Shell Size-Insert Arrangement*	Per MIL-STD-1560; symmetrical layouts only, consult factory for complete details					
Contact Type	**PP** = Pin on both sides **BSDP** = Blind-mate side socket - D38999 side pin **SS** = Socket on both sides **BPDS** = Blind-mate side pin - D38999 side socket					
Alternate Polarization*	**A** = 40°, **B** = 65°, **C** = 80°, **D** = 210°, **E** =250°, **F** = 280°, **G** = 310°, **H**= 330°, **N** = 135° (Normal) Per L°. Refers to blind mate side. Plug side per MIL-DTL-38999. See alternate polariztions table					

***Refer to section A for complete details.** Refer to Space-Grade Guidelines material (IAW NASA EEE INST-002) for outgassing and screening modification codes, on pages 60 and 61. Modification codes may be added directly to the end of any valid part number

253-033 FLOAT MOUNT FEED-THRU, JAM NUT MOUNT RECEPTACLE TO 38999 TYPE SERIES III PLUG MATING INTERFACE

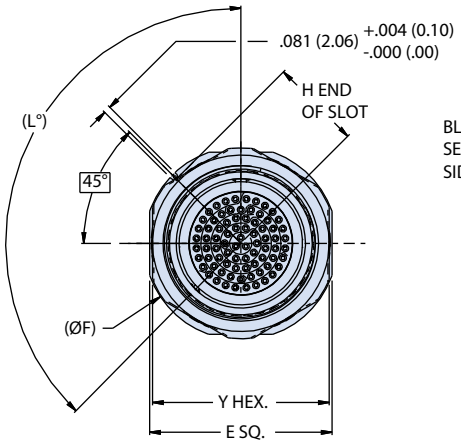

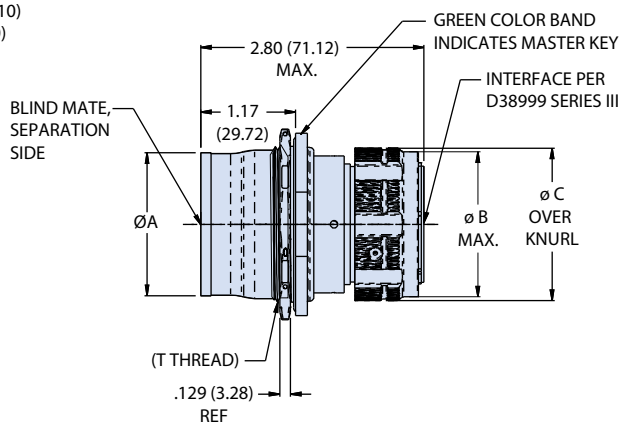

Alternate Polarizations	
ID	**L°**
N	135°
A	40°
B	65°
C	80°
D	210°
E	250°

Dimensions for 253-033								
Shell Size	**Ø A Max**	**T Thread Class 2A**	**Y Hex Flats**	**E flange ±.016**	**ØF Flange**	**H End of Slot +0/-.008**	**ØB Max**	**ØC Max**
13	.978	1.1250-18 UNEF	1.300 (33.02)	1.391 (35.33)	1.641 (41.68)	.729 (18.52)	1.050 (26.67)	1.200 (30.48)
15	1.103	1.2500-18 UNEF	1.457 (37.01)	1.516 (38.51)	1.750 (44.45)	.791 (20.09)	1.180 (29.97)	1.320 (33.53)
23	1.603	1.7500-18 UNEF	2.010 (51.05)	2.078 (52.78)	2.312 (58.72)	1.072 (27.23)	1.670 (42.42)	1.790 (45.47)
25	1.728	1.8750-18 UNEF	2.125 (53.97)	2.200 (55.88)	2.327 (59.11)	1.096 (27.84)	1.800 (45.72)	1.920 (48.77)

NOTES:

1. Distance between mated mounting flanges: 1.808 Consult manufacturer other distance between mounting flanges is required
2. See Space-Grade guidelines material, in this section, for outgassing/screening options available
3. Stainless steel locating pin (Ø.079) shipped with each connector
4. Misalignment capabilities are possible with mated pair reference Glenair connector 253-019

© 2022 Glenair, Inc • 1211 Air Way, Glendale, CA 91201 • 818-247-6000 • www.glenair.com • U.S. CAGE code 06324 • SuperNine® Catalog
Dimensions in Inches (millimeters) are subject to change without notice.

Rev. 06.19.24

SuperNine® Environmental Series

MIL-DTL-38999 Series III Type space-grade blind-mate

253-033 Bulkhead feed-thru jam-nut receptacle, D38999 B-side

MISALIGNMENT CAPABILITIES (see note 4)

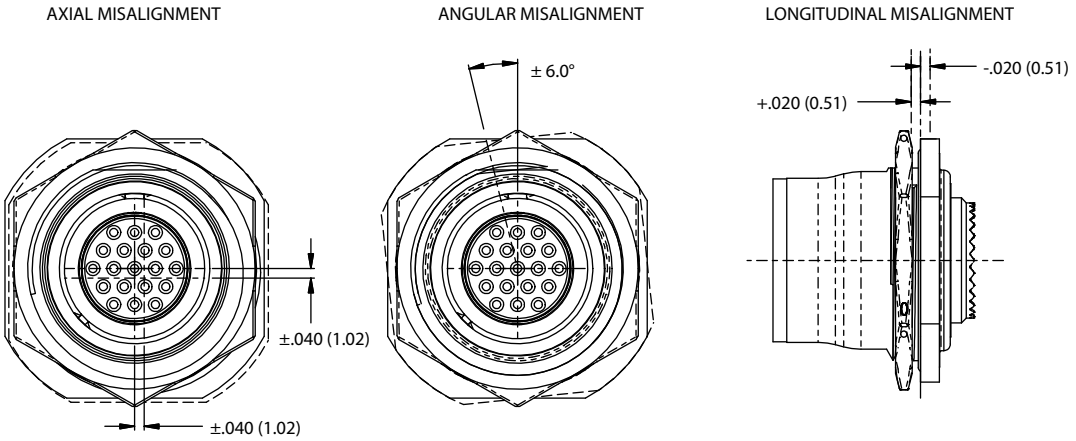

Distance Between Mated Flanges

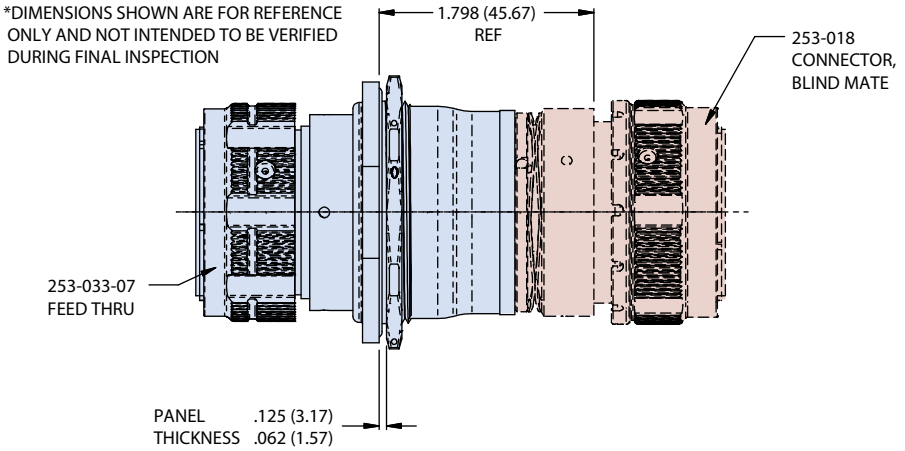

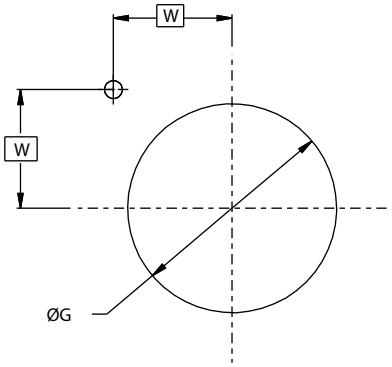

Recommended Panel Cut-out		
Shell Size	ØG, Thru Hole ±0004 (0.10)	W Basic
13	1.134 (28.80)	.549 (13.94)
15	1.259 (31.98)	.593 (15.06)
23	1.759 (44.68)	.797 (20.24)
25	1.884 (47.85)	.809 (20.55)

© 2022 Glenair, Inc • 1211 Air Way, Glendale, CA 91201 • 818-247-6000 • www.glenair.com • U.S. CAGE code 06324 • SuperNine® Catalog
Dimensions in Inches (millimeters) are subject to change without notice.

SuperNine® Environmental Series

MIL-DTL-38999 Series III Type space-grade blind-mate

253-025 Locking circuit and test-mate, mates with 253-016

Part Number Developement						
Sample Part Number	**253-025**	**-G6**	**ME**	**23-43**	**P**	**N**
Series / Basic Part No.	**253-025** = Locking circuit and test mate connector					
Connector Mounting	**-G6** = In-line					
Material/Finish	**ME** = Aluminum, electroless nickel **ZL** = CRES, electrodeposited nickel **MT** = Aluminum, nickel PTFE **Z1** = CRES, passivated					
Shell Size-Insert Arrangement*	Per MIL-STD-1560					
Contact Type	**P** = Pin, crimp removable **A** = Pin insert less contacts **S** = Socket, crimp removable **B** = Socket insert less contacts					
Alternate Polarization*	**A** = 40°, **B** = 65°, **C** = 80°, **D** = 210°, **E** =250°, **F** = 280°, **G** = 310°, **H**= 330°, **N** = 135° (Normal) Per L° Basic. Refers to blind mate side. Plug side per MIL-DTL-38999. See alternate polariztions table					

***Refer to section A for complete details.** Refer to Space-Grade Guidelines material (IAW NASA EEE INST-002) for outgassing and screening modification codes, on pages 60 and 61. Modification codes may be added directly to the end of any valid part number

253-025 LOCKING CIRCUIT AND TEST MATE CONNECTOR, MATES WITH 253-016 PLUG

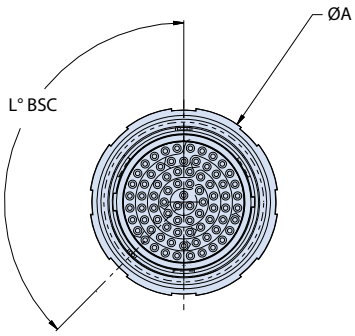

Ready To Mate

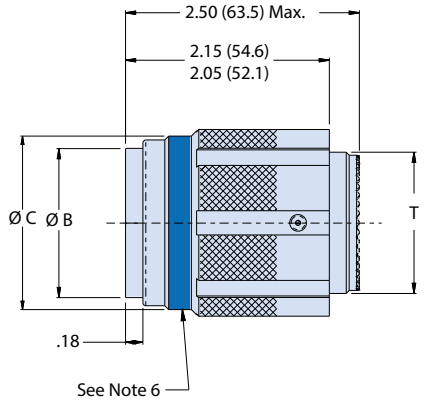

Mated Pair (Reference Only)
See Note 4

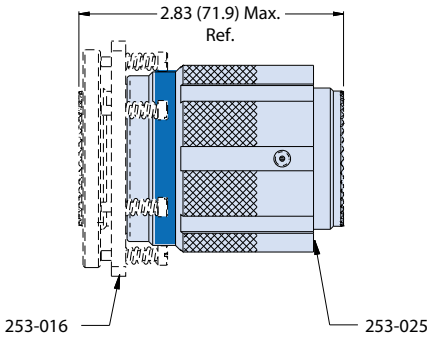

Mated

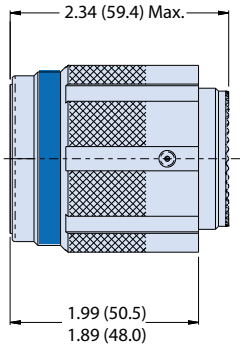

Dimensions				
Shell Size	**Ø A Max**	**Ø B**	**Ø C**	**T Thd 1.0-6g -0.100R**
17	1.55 (39.37)	1.04 (26.42)	1.29 (32.77)	M25
19	1.67 (42.42)	1.17 (29.72)	1.42 (36.07)	M28
25	2.05 (52.07)	1.54 (39.12)	1.79 (45.47)	M37

NOTES:

1. Material/ finish:
   - Shell, coupling ring, segments - see part number development, finish
   - Insulators - high grade rigid dielectric / N.A.
   - Contacts - copper alloy / gold plated
2. Connector mates with Glenair 253-016 series connector, having the same insert arrangement and polarization.
3. Insert arrangement is in accordance with MIL-STD-1560 arrangements only. Contact manufacturer for availability.
4. Connector mated with Glenair 253-016 is shown for reference only.
5. See Space-Grade guidelines material, in this section, for outgassing and screening options available
6. Blue color band indicates rear release contact retention system

© 2022 Glenair, Inc • 1211 Air Way, Glendale, CA 91201 • 818-247-6000 • www.glenair.com • U.S. CAGE code 06324 • SuperNine® Catalog

Dimensions in Inches (millimeters) are subject to change without notice.

MIL-DTL-38999 Series I Type

250-101 Plug and receptacle connector, shorting

ENVIRONMENTAL CONNECTORS

"BETER THAN QPL" FEATURES AND BENEFITS

- Improved, positive-lock, 3-point stainless-steel pin bayonet coupling with outstanding vibration and shock resustance
- Integral banding porch eliminates need for add-on accessories
- Improved plug ground fingers deliver outstanding EMI performance—equal to D38999 Series III
- Glenair Signature tin zinc finish class is RoHS compliant and cadmium compatible
- Precision-machined key/keyway polarization for reliable mismating protection
- Nine shell sizes and eight receptacle styles
- Scoop-proof design prevents pin damage and short circuits
- Fully tooled for all MIL-STD-1560 insert arrangements
- Contact options include size #22D, #20, #16, and #12 (see High-Speed series for Size #8)
- 500 + mating cycles exceeds MIL-DTL-38999 spacification

HOW TO ORDER

Sample Part Number	250-101	G6	NF	17	-35	P	N

Basic Part Number	**250-101**
Connector Style	**G6** = Plug Connector **D0** = Wall Mount Thru Hole **07** = Receptacle, Jam Nut
Material/Finish	**NF**, **MA**, **MT**, **ME**, **ZR** (See Table I)
Shell Size	**9**, **11**, **13**, **15**, **17**, **19**, **21**, **23**, **25**
Insert Arrangement	PER MIL-STD-1560
Contact Style	**P** = Pin Contacts **S** = Socket Contacts
Alternate Polarization	**N** = Normal, **A**, **B**, **C**, **D**, **K**, **L**, **M**, **R** **U** = Universal

TABLE II - PLUG

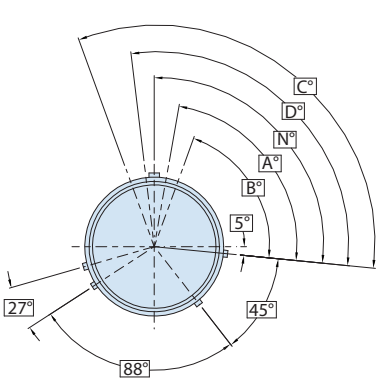

MASTER KEY POSITION
PARTIAL FRONT VIEW SHOWN
(PLUG)

G6 - PLUG WITH EMI SPRING (REF: MS27467T)

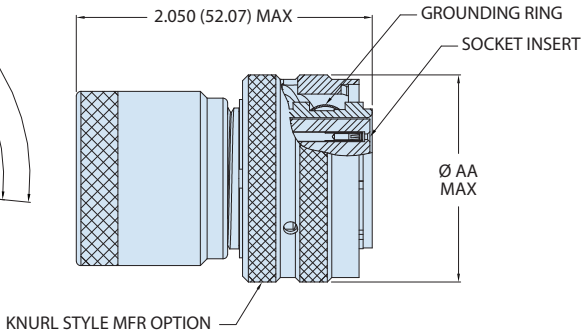

Shell Size	ØAA Max	Alternate Keyway Positions				
		N°	A°	B°	C°	D°
9	0.859	95°	77°	-	-	113°
11	0.984	95°	81°	67°	123°	109°
13	1.156	95°	75°	63°	127°	115°
15	1.281	95°	74°	61°	129°	116°
17	1.406	95°	77°	65°	125°	113°
19	1.516	95°	77°	65°	125°	113°
21	1.641	95°	77°	65°	125°	113°
23	1.766	95°	80°	69°	121°	110°
25	1.891	95°	80°	69°	121°	110°

© 2024 Glenair, Inc • 1211 Air Way, Glendale, CA 91201 • 818-247-6000 • www.glenair.com • U.S. CAGE code 06324 •
SuperNine MIL-DTL-38999 Series I Type · Dimensions in Inches (millimeters) are subject to change without notice.

MIL-DTL-38999 Series I Type

250-101 Plug and receptacle connector, shorting

TABLE III - WALL MOUNT

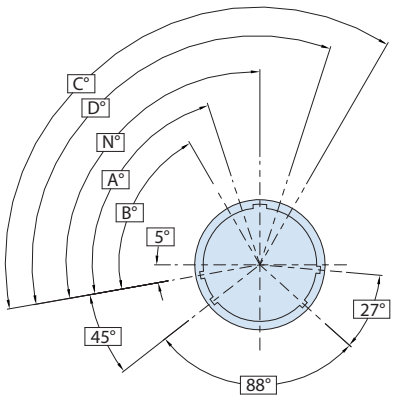

MASTER KEYWAY POSITION
PARTIAL FRONT VIEW SHOWN
(RECEPTACLE)

D0 - WALL MOUNT FRONT PANEL RECEPTACLE
WITH STANDARD HOLES (REF: MS27466T)

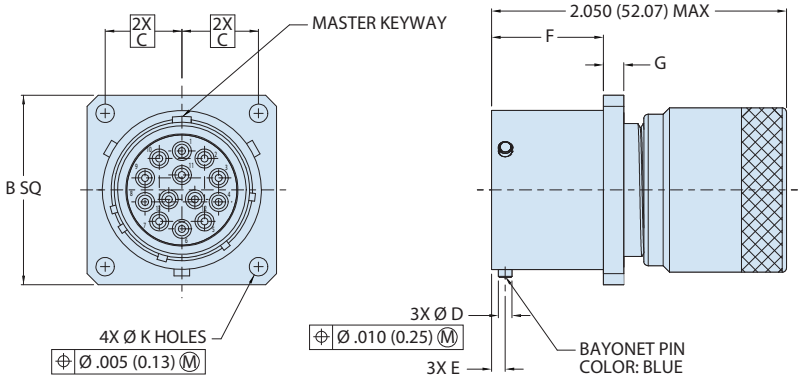

Shell Size Code	Shell Size	B Sq	C Bsc	F	G	ØK Holes	ØD	E Bsc
A	9	0.958 0.918	0.360	.632 .627	.100 .085	.138 .123	.084 .076	0.100
B	11	1.051 1.011	0.406					
C	13	1.145 1.105	0.453					
D	15	1.239 1.199	0.485					
E	17	1.332 1.292	0.531					
F	19	1.458 1.418	0.578					
G	21	1.582 1.542	0.625	.602 .597	.130 .115	0.157		
H	23	1.708 1.668	0.688					
J	25	1.832 1.792	0.750			0.142	.131 .123	0.109

TABLE I: MATERIAL/FINISH

Sym	Material	Finish
NF	Aluminum Alloy	Cad/O.D. Over Electroless Nickel
MA		Electroless Nickel, Matte
MT		Nickel-PTFE
ME		Electroless Nickel
ZR		Zinc Ni, Black (Tri-Valent CR)

TABLE IV

SHELL SIZE	ALTERNATE KEYWAY POSITIONS				
	N°	A°	B°	C°	D°
9	95°	77°	-	-	113°
11	95°	81°	67°	123°	109°
13	95°	75°	63°	127°	115°
15	95°	74°	61°	129°	116°
17	95°	77°	65°	125°	113°
19	95°	77°	65°	125°	113°
21	95°	77°	65°	125°	113°
23	95°	80°	69°	121°	110°
25	95°	80°	69°	121°	110°

© 2024 Glenair, Inc • 1211 Air Way, Glendale, CA 91201 • 818-247-6000 • www.glenair.com • U.S. CAGE code 06324 •

MIL-DTL-38999 Series I Type

250-101 Plug and receptacle connector, shorting

TABLE V - JAM NUT

07 - JAM NUT MOUNT RECEPTACLE (REF: MS27468T)

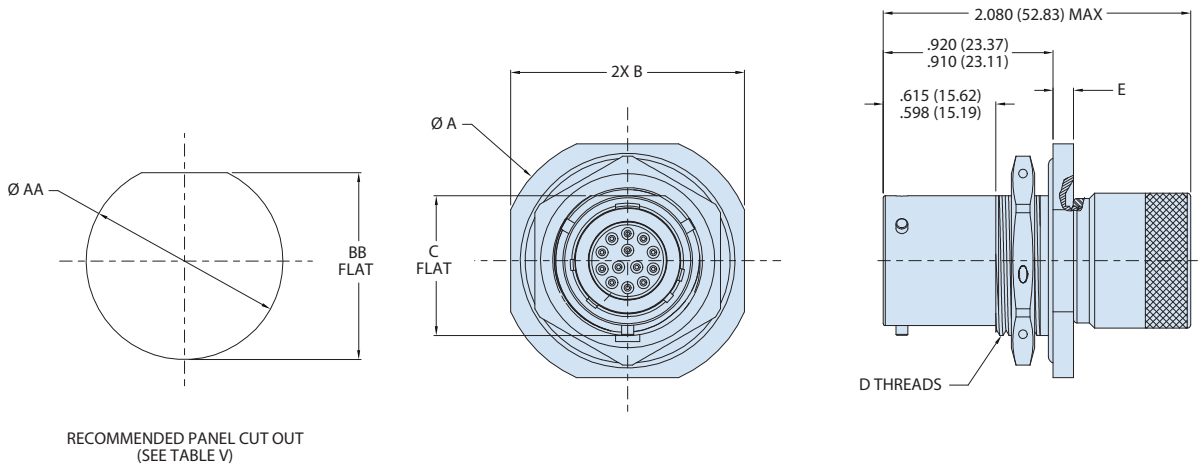

Shell Size Code	Shell Size	Ø A ±.016	B ±.016	C Flat	D Thread Class 2A UNEF	E	Ø AA	BB Flat
A	9	1.188	1.062	0.655 0.645	.6875-24	.120 .099	0.703 0.693	0.661 0.654
B	11	1.375	1.250	0.755 0.745	.8125-20		0.835 0.825	0.771 0.761
C	13	1.500	1.375	0.942 0.932	1.0000-20		1.020 1.010	0.955 0.945
D	15	1.625	1.500	1.066 1.056	1.1250-18		1.145 1.135	1.085 1.075
E	17	1.750	1.625	1.191 1.181	1.2500-18		1.270 1.260	1.210 1.200
F	19	1.938	1.812	1.316 1.306	1.3750-18	.151 .130	1.395 1.385	1.335 1.325
G	21	2.062	1.938	1.441 1.431	1.5000-18		1.520 1.510	1.460 1.450
H	23	2.188	2.062	1.566 1.556	1.6250-18		1.645 1.635	1.585 1.575
J	25	2.312	2.188	1.691 1.681	1.7500-18		1.770 1.760	1.710 1.700

NOTES

1. Material/finish:
   - Shell, barrel, coupling nut, cover, jam nut - al alloy / see Table I
   - Wave washer - CRES / passivate
   - Insulator - high grade rigid dielectric / N.A
   - Seals - silicone / N.A.
   - Contacts, ground ring - copper alloy / gold
2. Assembly is identified with Glenair's name, cage code, part number, and date code, space permitting
3. All contacts are shorted to each other and to the shell. The maximum Resistance as measured from any contact to the shell shall be 10 milliohms.
4. Glenair's 250-101 connectors are designed to mate with any qpl Manufacturer's mil-dtl-38999, series i connectors having the same Shell size, insert arrangement, and polarization.
5. Insert arrangement is in accordance with mil-std-1560. Contact manufacturer for additional arrangement options.
6. Insert arrangement is shown for reference only. Pin interface shown.
7. Alternate polarization 'u' (universal) is a non-standard mil-spec Option which allows for mating to any qpl manufacturer's Mil-dtl-38999, series i connector having the same shell size, Insert arrangement, and mating contact size. Universal connectors Are intended for use in testing facilities only and should be highly Evaluated before consideration in another environment.
8. Connector temperature range: -55°c to 175°c. Contact manufacturer for Additional options.

© 2024 Glenair, Inc • 1211 Air Way, Glendale, CA 91201 • 818-247-6000 • www.glenair.com • U.S. CAGE code 06324 •
SuperNine MIL-DTL-38999 Series I Type · Dimensions in Inches (millimeters) are subject to change without notice.

SuperNine® Space-grade Environmental Connector, Shorting, Wall Mount

MIL-DTL-38999 Series III

Part Number Developement							
Sample Part Number	**250-102**	**G6**	**NF**	**16**	**-35**	**P**	**N**
Series / Basic Part No.	**250-102** = Environmental Connector, Shorting						
Connector Style	**06** = In-line **D0** = Wall Mount Thru Hole **07** = Receptacle, Jam Nut						
Material/Finish	See Table I						
Shell Size	**8**, **10**, **12**, **14**, **16**, **18**, **20**, **22**, **24**						
Insert Arrangement	Per MIL-STD-1560						
Contact Type	**P** = Pin Contacts **S** = Socket Contacts						
Alternate Polarization	**N** = Normal, **A, B, C, D, K, L, M, R** **U** = Universal						

250-102 ENVIRONMENTAL CONNECTOR, SHORTING

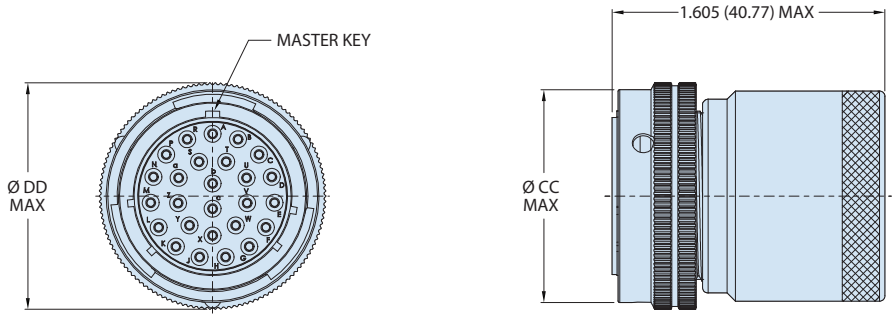

06 - PLUG, STRAIGHT, NON-EMI (MS27473T)
(SEE TABLE II)

Table I - Material/Finish		
Sym	**Material**	**Finish**
NF	Aluminum Alloy	Cad/O.D. Over Electroless Nickel
MT		Nickel-PTFE
ME		Electroless Nickel
MA		Electroless Nickel, Matte
ZR		Zinc Ni, Black (Tri-Valent Cr)

Table II - Plug			
Shell Size Code	**Shell Size**	**ø CC MAX**	**ø DD MAX**
A	8	0.630	0.750
B	10	0.752	0.859
C	12	0.925	1.031
D	14	1.050	1.156
E	16	1.172	1.281
F	18	1.304	1.406
G	20	1.435	1.531
H	22	1.560	1.641
J	24	1.688	1.766

NOTES:

1. Material / finish:
   - Shell, barrel, coupling nut, cover, jam nut - al alloy / See Table I
   - Wave washer - CRES / passivate
   - Insulator - high grade rigid dielectric / N.A
   - Seals - silicone / N.A.
   - Contacts, ground ring - copper alloy / gold
2. Assembly is identified with Glenair's name, cage code, part number, and date code, space permitting.
3. All contacts are shorted to each other and to the shell. The maximum resistance as measured from any contact to the shell shall be 10 milliohms.
4. Glenair's 250-102 connectors are designed to mate with any qpl manufacturer's MIL-DTL-38999, Series II connectors having the same shell size, insert arrangement, and polarization.
5. Insert arrangement is in accordance with MIL-STD-1560. Contact manufacturer for additional arrangement options.
6. Insert arrangement shown is for reference only. Pin interface shown.
7. Alternate polarization 'U' (universal) is a non-standard MIL-SPEC option which allows for mating to any qpl manufacturer's MIL-DTL-38999, Series II connector having the same shell size, insert arrangement, and mating contact size. Universal connectors are intended for use in testing facilities only and should be highly evaluated before consideration in another environment.
8. Connector temp range: -55° c to 175° c. Contact manufacturer for additional options.

© 2018 Glenair, Inc • 1211 Air Way, Glendale, CA 91201 • 818-247-6000 • www.glenair.com • U.S. CAGE code 06324 • SuperNine® Catalog
Dimensions in Inches (millimeters) are subject to change without notice.

SuperNine® Space-grade Environmental Connector, Shorting, Wall Mount

MIL-DTL-38999 Series III

250-102 ENVIRONMENTAL CONNECTOR, SHORTING, WALL MOUNT

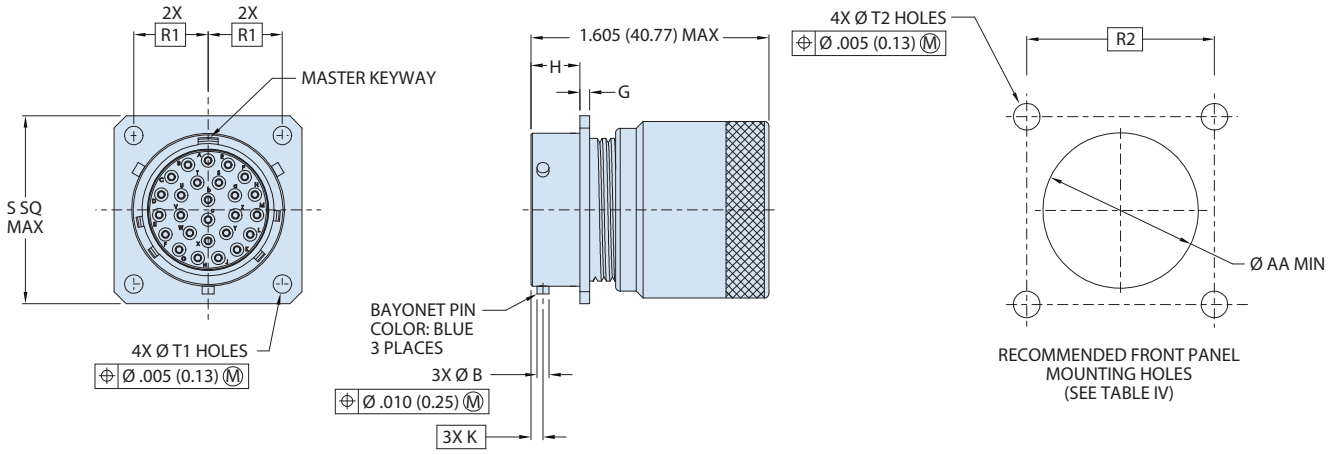

D0 - WALL MOUNT FRONT PANEL RECEPTACLE
WITH STANDARD HOLES (MS27472T)
(SEE TABLE III)

Table III - Wall Mount (Front) MS27472T

Shell Size Code	Shell Size	S SQ	R1 BSC	G	H	ØT1 HOLES	Ø B	K BSC
A	8	0.828	0.297	.069 / .058	.322 / .317	.130 / .115	.084 / .076	0.078
B	10	0.954	0.360					
C	12	1.047	0.406					
D	14	1.141	0.453					
E	16	1.234	0.485					
F	18	1.328	0.531					
G	20	1.453	0.578				.131 / .123	
H	22	1.578	0.625					
J	24	1.703	0.688			0.157 / 0.142		

Table IV - Mounting Holes

Shell Size Code	Shell Size	ØAA Min	ØT2 Holes	R2 Bsc
A	8	0.516	.133 / .123	0.594
B	10	0.625		0.719
C	12	0.750		0.812
D	14	0.906		0.906
E	16	1.016		0.969
F	18	1.141		1.062
G	20	1.266		1.156
H	22	1.375	.159 / .149	1.250
J	24	1.484	.155 / .145	1.375

© 2018 Glenair, Inc • 1211 Air Way, Glendale, CA 91201 • 818-247-6000 • www.glenair.com • U.S. CAGE code 06324 • SuperNine® Catalog
Dimensions in Inches (millimeters) are subject to change without notice.

SuperNine® Space-grade Environmental Connector, Shorting, Wall Mount

MIL-DTL-38999 Series III

250-102 ENVIRONMENTAL CONNECTOR, SHORTING, JAM NUT MOUNT

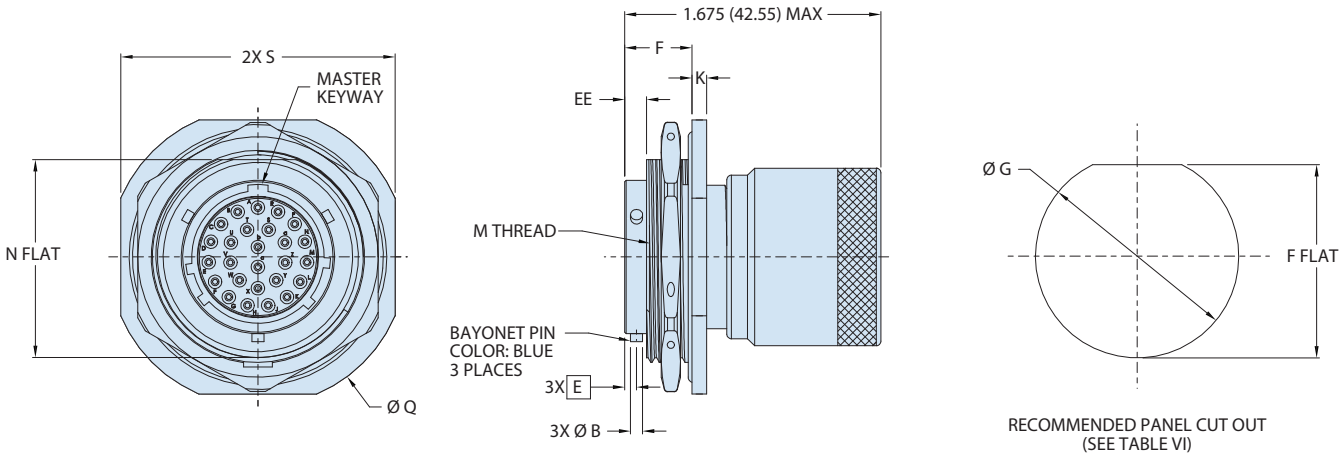

07 - JAM NUT MOUNT RECEPTACLE (MS27474T)
(SEE TABLE V)

RECOMMENDED PANEL CUT OUT
(SEE TABLE VI)

Table V - Jam Nut Mount										
Shell Size Code	Shell Size	Ø Q	S	N Flat	M Thread	K	Ø B	E Bsc	F	Ee
A	8	1.391 / 1.359	1.266 / 1.234	0.818 / 0.811	.8750-20 UNEF-2A	.105 / .084	.084 / .076	0.078	.443 / .433	.145 / .140
B	10	1.516 / 1.484	1.391 / 1.359	0.942 / 0.935	1.0000-20 UNEF-2A					
C	12	1.641 / 1.609	1.516 / 1.484	1.066 / 1.059	1.1250-18 UNEF-2A					
D	14	1.766 / 1.734	1.641 / 1.609	1.191 / 1.184	1.2500-18 UNEF-2A					
E	16	1.954 / 1.922	1.797 / 1.765	1.321 / 1.314	1.3750-18 UNEF-2A					
F	18	2.032 / 2.000	1.906 / 1.874	1.441 / 1.434	1.5000-18 UNEF-2A					
G	20	2.157 / 2.125	2.032 / 2.000	1.566 / 1.559	1.6250-18 UNEF-2A		.131 / .123		.469 / .459	.171 / .166
H	22	2.281 / 2.249	2.156 / 2.124	1.691 / 1.684	1.750-18 UNS-2A					
J	24	2.406 / 2.374	2.281 / 2.249	1.816 / 1.809	1.875-16 UN-2A					

Table VI - Panel Mount			
Shell Size Code	Shell Size	Ø G	F Flat
A	8	0.895 / 0.885	0.830 / 0.820
B	10	1.020 / 1.010	0.955 / 0.945
C	12	1.145 / 1.135	1.085 / 1.075
D	14	1.270 / 1.260	1.210 / 1.200
E	16	1.395 / 1.385	1.335 / 1.325
F	18	1.520 / 1.510	1.460 / 1.450
G	20	1.645 / 1.635	1.585 / 1.575
H	22	1.770 / 1.760	1.709 / 1.699
J	24	1.895 / 1.885	1.835 / 1.825

© 2018 Glenair, Inc • 1211 Air Way, Glendale, CA 91201 • 818-247-6000 • www.glenair.com • U.S. CAGE code 06324 • SuperNine® Catalog
Dimensions in Inches (millimeters) are subject to change without notice.

ADVANCED PERFORMANCE

SuperNine® Environmental Series

MIL-DTL-38999 Series III Type space-grade blind-mate

250-103 Environmental Connector, Shorting

Part Number Developement						
Sample Part Number	**250-103**	**G6**	**NF**	**17-35**	**P**	**N**
Series / Basic Part No.	**250-103** = Environmental Connector, Shorting					
Connector Style	**G6** = In-line **00** = Wall Mount Thru Hole **07** = Receptacle, Jam Nut					
Material/Finish	See Table I					
Shell Size-Insert Arrangement	Per MIL-STD-1560					
Contact Type	**P** = Pin, **S** = Socket					
Alternate Polarization	**A**, **B**, **C**, **D**, **N** = (Normal)					

250-103 ENVIRONMENTAL CONNECTOR, SHORTING

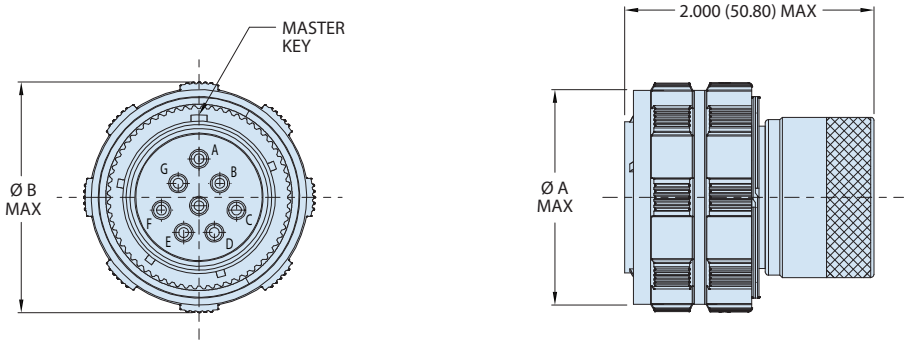

G6 - PLUG WITH EMI SPRING
(REF: MIL-DTL-38999/26)

Table I - Material/Finish

Sym	Material	Finish
NF	Aluminum Alloy	Cad/O.D. Over Electroless Nickel
MT		Nickel-PTFE
ME		Electroless Nickel
MA		Electroless Nickel, Matte
ZR		Zinc Ni, Black (Tri-Valent Cr)
TZ		Tin-Zinc
MN		Mega-Nickel

Table II - Plug

Shell Size Code	Shell Size	ø A MAX	ø B MAX
A	09	0.732	0.858
B	11	0.839	0.984
C	13	1.008	1.157
D	15	1.138	1.280
E	17	1.276	1.406
F	19	1.382	1.516
G	21	1.508	1.642
H	23	1.626	1.768
J	25	1.752	1.890

NOTES:

1. Material / finish:
   - Shell barrel, coupling nut (See Table I)
   - Seals - fluorosilicone blend / N.A
   - Contact - copper alloy / gold plate
   - Insulators - high grade rigid dielectric / N.A
2. Assembly is identified with Glenair's name, cage code, part number, and date code, space permitting.
3. Glenair 250-103 shorting plug is designed to mate with any qpl manufacturer's MIL-DTL-38999, Series III mating receptacle having the same shell size, insert arrangement, and polarization.
4. Insert arrangement is in accordance with MIL-STD-1560. Contact manufacturer for additional arrangement options.
5. Insert arrangement shown is for reference only. Pin interface shown.
6. All contacts are shorted to each other and to the shell. The maximum resistance as measured from any contact to the shell shall be 10 milliohms.
7. Connector temp range: -55° c to 175° c. Contact manufacturer for additional options.
8. Modified major dia. 31.80-31.95 (1.252-1.257)

© 2022 Glenair, Inc • 1211 Air Way, Glendale, CA 91201 • 818-247-6000 • www.glenair.com • U.S. CAGE code 06324 • SuperNine® Catalog
Dimensions in Inches (millimeters) are subject to change without notice.

250-103 ENVIRONMENTAL CONNECTOR, SHORTING, WALL MOUNT

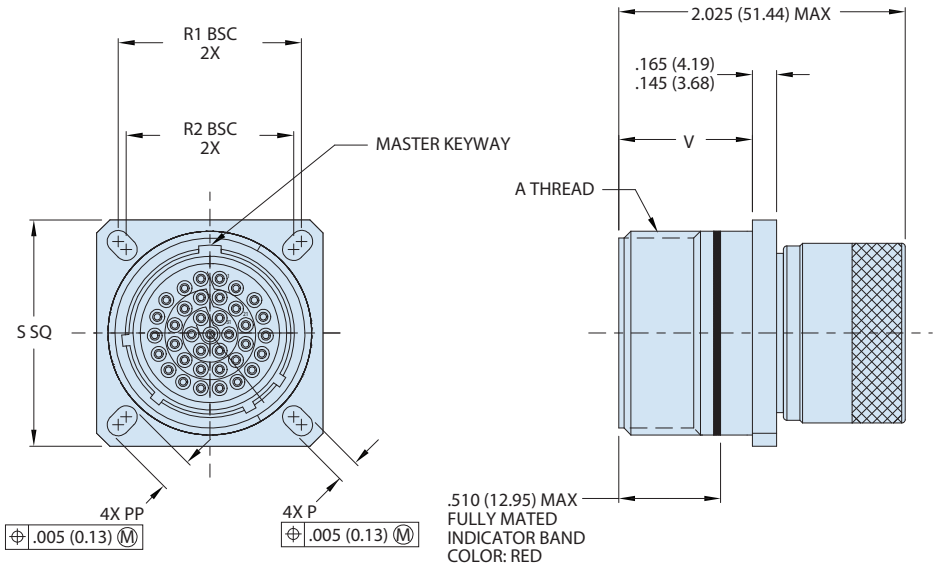

00 - WALL MOUNT RECEPTACLE
WITH SLOTTED HOLES
(REF: MIL-DTL-38999/20)

Table III - Wall Mount

Shell Size Code	Shell Size	A Thread	S Sq	R1 Bsc	R2 Bsc	P	PP	V
A	9	.6250-.1P-.3L-TS-2A	.949 .925	0.719	0.594	.136 .120	.224 .208	.820 .771
B	11	.7500-.1P-.3L-TS-2A	1.043 1.019	0.812	0.719		.202 .186	
C	13	.8750-.1P-.3L-TS-2A	1.138 1.114	0.906	0.812			
D	15	1.0000-.1P-.3L-TS-2A	1.232 1.208	0.969	0.906		.181 .165	
E	17	1.1875-.1P-.3L-TS-2A	1.323 1.299	1.062	0.969		.202 .186	
F	19	1.2500-.1P-.3L-TS-2A	1.449 1.425	1.156	1.062			
G	21	1.3750-.1P-.3L-TS-2A	1.575 1.551	1.250	1.156			.790 .741
H	23	1.5000-.1P-.3L-TS-2A	1.701 1.677	1.375	1.250	.162 .146	.250 .234	
J	25	1.6250-.1P-.3L-TS-2A	1.823 1.799	1.500	1.375			

© 2022 Glenair, Inc • 1211 Air Way, Glendale, CA 91201 • 818-247-6000 • www.glenair.com • U.S. CAGE code 06324 • SuperNine® Catalog
Dimensions in Inches (millimeters) are subject to change without notice.

SuperNine® Environmental Series

MIL-DTL-38999 Series III Type space-grade blind-mate

250-103 Environmental Connector, Shorting, Jam Nut Mount

250-103 ENVIRONMENTAL CONNECTOR, SHORTING, JAM NUT MOUNT

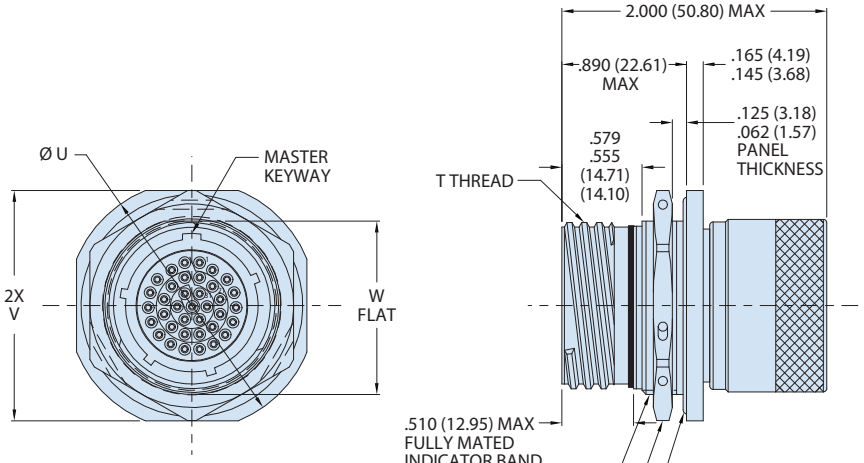

07 - JAM NUT RECEPTACLE
(REF: MIL-DTL-38999/24)

Table IV - Jam Nut Mount

Shell Size Code	Shell Size	T Thread	ØU	V	W Flat	X Thread
A	9	.6250-.1P-.3L-TS-2A	1.200 1.178	1.078 1.048	0.654 0.645	M17 X 1.0-6g 0.100R
B	11	.7500-.1P-.3L-TS-2A	1.386 1.362	1.268 1.236	0.755 0.745	M20 X 1.0-6g 0.100R
C	13	.8750-.1P-.3L-TS-2A	1.512 1.488	1.390 1.358	0.942 0.932	M25 X 1.0-6g 0.100R
D	15	1.0000-.1P-.3L-TS-2A	1.638 1.614	1.516 1.484	1.066 1.056	M28 X 1.0-6g 0.100R
E	17	1.1875-.1P-.3L-TS-2A	1.764 1.740	1.642 1.610	1.191 1.181	M32 X 1.0-6g 0.100R
F	19	1.2500-.1P-.3L-TS-2A	1.949 1.925	1.827 1.795	1.316 1.306	M35 X 1.0-6g 0.100R
G	21	1.3750-.1P-.3L-TS-2A	2.075 2.051	1.953 1.921	1.441 1.431	M38 X 1.0-6g 0.100R
H	23	1.5000-.1P-.3L-TS-2A	2.201 2.177	2.079 2.047	1.566 1.556	M41 X 1.0-6g 0.100R
J	25	1.6250-.1P-.3L-TS-2A	2.323 2.299	2.205 2.173	1.691 1.681	M44 X 1.0-6g 0.100R

© 2022 Glenair, Inc • 1211 Air Way, Glendale, CA 91201 • 818-247-6000 • www.glenair.com • U.S. CAGE code 06324 • SuperNine® Catalog
Dimensions in Inches (millimeters) are subject to change without notice.

Glenair®

MISSION-DRIVEN DESIGN

SERIES 23 SUPERNINE®

High-Speed Series MIL-DTL-38999 Series III

Shielded contact connectors for 10GbE, HDMI, DisplayPort, USB 3.0, SATA and other high-speed digital datalink application protocols



Glenair signature octaxial El Ochito® contact solutions, industry-standard quadrax, and next-generation SpeedMaster™ connectors for high-speed matched impedance cables

SuperNine®

ADVANCED PERFORMANCE

SuperNine® High-speed connectors

MIL-DTL-38999 Series III Type Environmental Connectors

Product selection guide

SuperNine® High-Speed Connectors

High-Speed Technology Overview C-3
Contacts and insert arrangements C-4
Contact layouts C-6
Performance Summary, Material/Finish and Panel Cutout Dimensions C-8

RF and El Ochito® Contacts

High-Speed, Keyed Crimp Contacts

Technology Overview C-9
Specifications C-11
Signal Integrity Data C-16
Contact Dimensions C-14
PCB footprints C-16
Mod Code 909 C-19
El Ochito Assembly Tools C-20
Shielded Contacts, Cables and Assembly Tools C-22
Cables C-23
Cable Assemblies, Jumpers Single and Ended C-26
Ethernet Test Adapters C-35

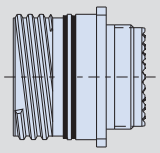

233-217 and 233-224 C-36

SuperNine® Plug and Receptacle Connectors with Accessory Threads or Integral Banding Porch and Removable el Ochito®, RF, Signal and Power Crimp Contact Options

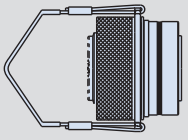

233-260 C-42

SuperNine® Quick-Disconnect Plug with Rear Release, Crimp Removable el Ochito®, RF, Signal and Power Contact Options.

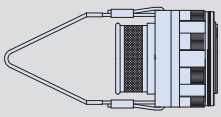

233-226 C-45

SuperNine® PC Tail Dual Flange Receptacle Connectors with Potted, Non-Removable el Ochito®, RF, Signal and Power PC Tail Contact Options.

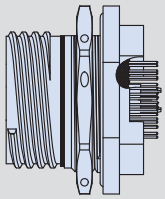

233-218 C-49

SuperNine® PC Tail Receptacle Connectors with Potted Non-Removable, el Ochito®, RF, Signal and Power PC Tail Contact Options.

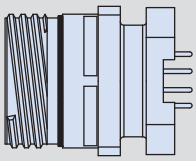

233-225 C-54

SuperNine® PC Tail Dual Flange Receptacle Connectors with Potted, Non-Removable el Ochito®, RF, Signal and Power PC Tail Contact Options.

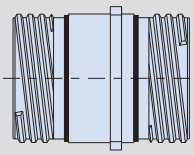

233-227 C-60

SuperNine® Panel Mount Bulkhead Feed-thru Receptacle with and High-Speed el Ochito®, RF, Signal and Power Contact Options.

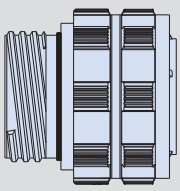

233-228 C-65

SuperNine® High-Speed Sav-Con® Connector Saver with and High-Speed el Ochito®, RF, Signal and Power Contact Options.

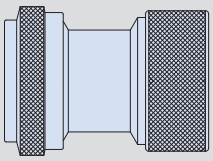

377HS121 C-68

Extender Backshell with Keyed Grommet Seal for use with Size #8 El Ochito Contact Cables.

Space Grade Connectors with El Ochito® Octaxial RF, Power and Signal Contacts

Space-Grade Guidelines for SuperNine® High-Speed Connectors C-69
Space-Grade, High-Speed Circular, Blind-Mate Connectors C-71

© 2022 Glenair, Inc • 1211 Air Way, Glendale, CA 91201 • 818-247-6000 • www.glenair.com • U.S. CAGE code 06324 • SuperNine® Catalog
Dimensions in Inches (millimeters) are subject to change without notice.

SuperNine® High-speed connectors

MIL-DTL-38999 Series III Type Environment Connectors

Product selection guide

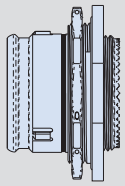

253-044 C-73

SuperNine® Fixed Mount Blind-Mate Plug Connectors with High-Speed el Ochito®, RF, Signal and Power Contact Options.

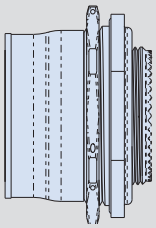

253-045 C-77

SuperNine® Float Mount Blind-Mate Receptacle Connectors with Mis-Alignment Capabilities and High-Speed el Ochito®, RF, Signal and Power Contact Options.

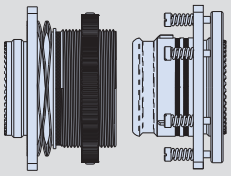

253-047 & 253-048 C-83

SuperNine® Fixed Mount Plug and Float Mount Receptacle Connectors with Mis-Alignment Capabilities and High-Speed el Ochito®, RF, Signal and Power Contact Options

SpeedMaster 10G Octaxial Contact System

Technology Overview	C-87
Specifications	C-89
Signal Integrity Data	C-91
How-to-Order SpeedMaster™ Contacts	C-92
Pre-Wired SpeedMaster™ Assemblies	C-93
Assembly Instructions	C-106



233-219 C-95

SuperNine® SpeedMaster™ Plug and Receptacle Connectors.



233-220 C-101

SuperNine® SpeedMaster™ Receptacle with PC Tail Contacts.

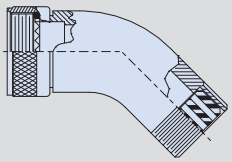

377N119 C-104

SuperNine® SpeedMaster™ Multi-Function Cable-Sealing Backshell Adapter. Straight, 45°, or 90°

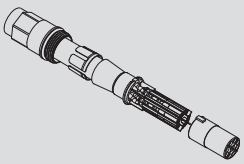

SpeedMaster Assembly Instructions C-106

© 2022 Glenair, Inc • 1211 Air Way, Glendale, CA 91201 • 818-247-6000 • www.glenair.com • U.S. CAGE code 06324 • SuperNine® Catalog
Dimensions in Inches (millimeters) are subject to change without notice.



MIL-DTL-38999 TYPE

Mil-Aero Ethernet, Video, and High-Speed Data Solutions

SuperNine® plug and receptacle connectors with special inserts to accommodate high-speed, shielded contacts

- **Tooled and ready-to-ship high-speed hybrid insert arrangement connectors for size #8, #12, and #16 shielded contacts. Nineteen layouts for High-Speed Coax, Twinax, Quadrax and El Ochito® contact solutions**
- **Supported applications: 10/100/1G/10G BASE-T Ethernet, analog/digital video, 1553 databus and general RF or differential data transmission**
- **El Ochito® contact technology: El Ochito® for 10G Ethernet (El Ochito® white), USB 3.0 (El Ochito® blue), and Multi gigabit datalink (El Ochito® red) applications such as HDMI, SATA and Displayport**
- **SpeedMaster™ 10G Ethernet contact solution featuring industry standard size 22D contacts for fast easy termination and repairability**
- **Size 22D SpeedMaster™ solutions from one to seven contact insert arrangements**

About Keyed Contacts

Glenair SuperNine® high-speed connector size #8 contact cavities are equipped with internal alignment slots. differential twinax, quadrax and El Ochito® contacts have a corresponding alignment key to properly orient the contact within the contact cavity.

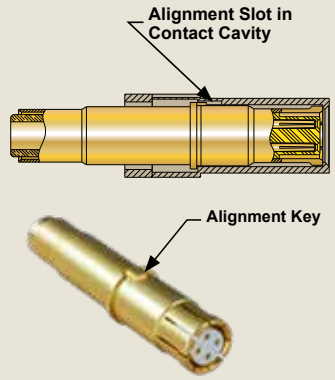



Size #8 Quadrax and El Ochito® contacts with alignment keys

© 2022 Glenair, Inc • 1211 Air Way, Glendale, CA 91201 • 818-247-6000 • www.glenair.com • U.S. CAGE code 06324 • SuperNine® Catalog

Dimensions in Inches (millimeters) are subject to change without notice.

SuperNine® High-speed connectors

MIL-DTL-38999 Series III Type Environmental Connectors

Ethernet, video, and high-speed data applications

Size #8 Shielded Contact Quick Reference Guide

Available Contacts (ordered separately)	Glenair P/N		Contact Size	Accommodates AWG Size	Cable Type	Application Notes
 **Coax**	Pin: 852-007 Socket: 852-006	Coax 50 ohm (M39029/59 & /60)	8	22 - 28	M17/95-RG180	Analog radio frequency or microwave applications
	Pin: 852-056-01 & -02 Socket: 852-057-01 & 02	75 ohm	8	26	**-01**: V73263, V75268, V76261, **-02**: M17/94-RG179	
 Differential Twinax	Pin: 853-014-05 Socket: 853-013-05		8	24	M17/176-00002	1553 Databus/ Differential Signal
 El Ochito® Octaxial	Pin: 858-003, Type I Socket: 858-004, Type I	el Ochito® White	8	26 - 28	963-033-26	1G/10G BaseT Ehternet
	Pin: 858-005, Type II Socket: 858-006, Type II	el Ochito® White	8	24 - 26	963-033-24	
	Pin: 858-028, Type I Socket: 858-029, Type I	el Ochito® Blue	8	26 - 28	963-110	USB 3.0
	Pin: 858-030-01, Type I Socket: 858-031, Type I	el Ochito® Red	8	26 - 28	Varies	SATA, HDMI, Display Port
 Quadrax	Pin: 854-001 Socket: 854-002		8	22 - 26	Varies	10/BASE-T Ethernet
 Triax/Concentric Twinax	Pin: 853-003 Socket: 853-004		8	22 - 28	M17/176-00002	1553 Databus

HIGH-SPEED INSERT ARRANGEMENTS IN CRIMP-CONTACT AND PC TAIL CONFIGURATIONS



233-217 G6 Plug featuring SuperNine® 500 mating-cycle ratcheted coupling technology



233-217 CM Square-Flange Crimp Receptacle with metric clinch nut mounting



233-218 07 Jam-Nut Receptacle with PC tail termination and threaded standoffs

© 2018 Glenair, Inc • 1211 Air Way, Glendale, CA 91201 • 818-247-6000 • www.glenair.com • U.S. CAGE code 06324 • SuperNine® Catalog
Dimensions in Inches (millimeters) are subject to change without notice.

SuperNine® High-speed connectors

MIL-DTL-38999 Series III Type Environmental Connectors

Signal, power, and RF contacts plus insert arrangements

Crimp Contacts								
Size #22 - #12 Contacts								
Contact Size	#23		#22D	#20	#16	#12	#8	
Wire Gauge	#22 - #28 AWG		#22 - #28 AWG	#20-#24 AWG	#16 - #20 AWG	#12 - #14 AWG	#8 AWG	
Max Current	5 amps		5 amps	7.5 amps	13 amps	23 amps	46 amps	
Pin	857-189		857-151-22	857-151-20	857-151-16	857-151-12	850-014	
Socket	857-190		857-150-22	857-150-20	857-150-16	857-150-12	850-013	
Size #8 Contacts				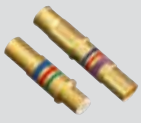				
Contact Size	#8 Coax 50Ω	#8 Coax 75Ω*	#12 Coax	#16 Coax	#8 Conc. Twinax	#8 Diff. Twinax	#8 Quadrax	#12 Pneumatic	#8 Optoelectronic
Pin	Depends on Cable	Depends on Cable	Depends on Cable	852-008	853-003	853-014	854-001	830-003	050-301 Tx
Socket				852-009	853-004	853-013	854-002	830-005	050-301 Rx
Size #8 El Ochito Contacts								
Contact Size	#8 El Ochito White, Type I		#8 El Ochito White, Type II	#8 El Ochito Blue, Type I	#8 El Ochito Blue, Type II	#8 El Ochito Red, Type I	#8 El Ochito Red, Type II	
Pin	858-003		858-005	858-028	858-069	858-030	858-063	
Socket	858-004		858-006	858-029	858-070	858-031	858-064	

*Contact factory for ordering details

Size 8 High-Speed Insert Arrangements*		
Shell Size	#8	Shell Size - Insert Arr.
9	1	9G5
11	1	11-1
17	2	17-75
19	4	19-4
21	4	21-75
23	5	23-5
23	6	23-6
25	8	25-8

*Note that any size #8 High-Speed contact can be substituted for size #8 power contact. See page C-4 for typical High-Speed contact applications.

Combo High-Speed Insert Arrangements*							
Shell Size	Number of Contacts						Shell Size - Insert Arr.
	#23	#22D	#20	#16	#12	#8	
13	14					1	13-14
17		38		2		1	17-2
17					2	2	17-22
17		8				2	17-60
19		10	1	4		2	19-17
19		14				4	19-18
25		97				2	25-7
25		36				6	25-17
25			10	13	4	3	25-20
25			16		5	4	25-26
25		22	3	11	2	3	25-41
25			40	4		2	25-46

FIGURE 2: CONTACT INNER PIN ORIENTATION



DIFERENTIAL TWINAX | QUADRAX | EL OCHITO SIZE 8

© 2022 Glenair, Inc • 1211 Air Way, Glendale, CA 91201 • 818-247-6000 • www.glenair.com • U.S. CAGE code 06324 • SuperNine® Catalog
Dimensions in Inches (millimeters) are subject to change without notice.

SuperNine® High-speed connectors

MIL-DTL-38999 Series III Type Environmental Connectors

Signal, power, and RF contact layouts

Contact Legend

#23 • #22D ◐
#16 ⊕ #20 ⊖
#12 ◒ #10 ◔
#8 ●





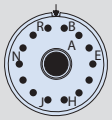

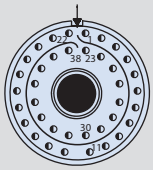

Insert Arrangement	9G5*	11-1	13-14		17-2	
No. of Contacts	1x #8	1x #8	1x #8	14x #23	1x #8	38x #22D

*Only available with ground plane option

Contact Legend

#23 • #22D ◐
#16 ⊕ #20 ⊖
#12 ◒ #10 ◔
#8 ●

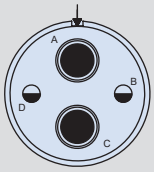

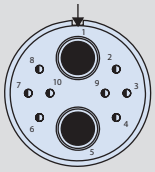

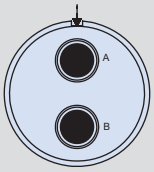

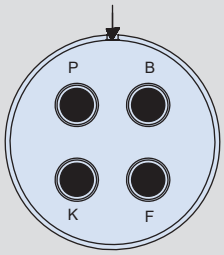

Insert Arrangement	17-22		17-60		17-75	19-4
No. of Contacts	2x #8	2x #12	2x #8	8x #22D	2x #8	4x #8

Contact Legend

#23 • #22D ◐
#16 ⊕ #20 ⊖
#12 ◒ #10 ◔
#8 ●

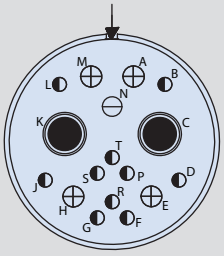

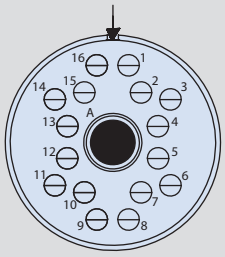

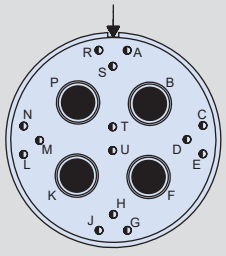

Insert Arrangement	19-17				19A-17		19-18	
No. of Contacts	2x #8	4x #16	1x #20	10x #22D	1x #8	16x #20	4x #8	14x #22D

Contact Legend

#23 • #22D ◐
#16 ⊕ #20 ⊖
#12 ◒ #10 ◔
#8 ●

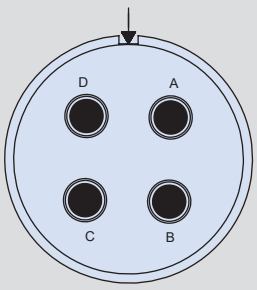

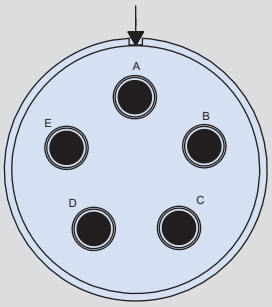

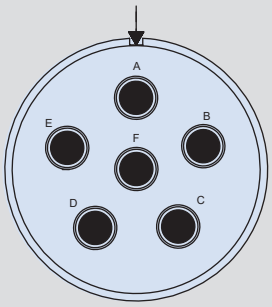

Insert Arrangement	21-75	23-5	23-6
No. of Contacts and Size	4x #8	5x #8	6x #8

© 2022 Glenair, Inc • 1211 Air Way, Glendale, CA 91201 • 818-247-6000 • www.glenair.com • U.S. CAGE code 06324 • SuperNine® Catalog
Dimensions in Inches (millimeters) are subject to change without notice.

SuperNine® High-speed connectors

MIL-DTL-38999 Series III Type Environmental Connectors

Signal, power, and RF contact layouts

Contact Legend

#23	•	#22D	◐
#16	⊕	#20	⊖
#12	◒	#10	◕
#8	●		

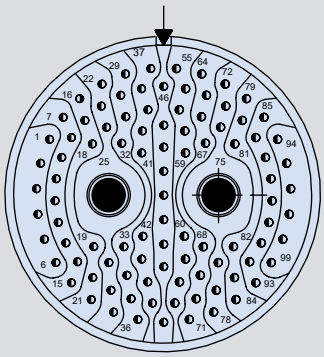

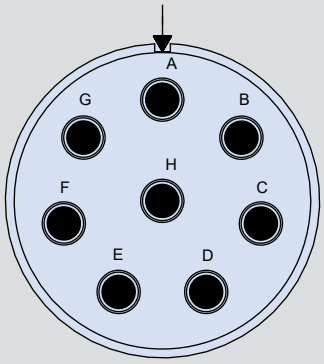

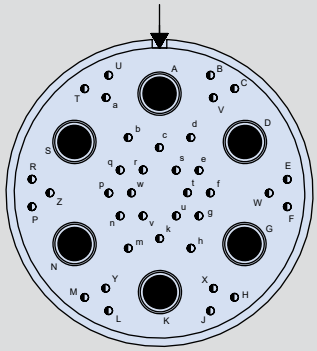

Insert Arrangement	25-7		25-8	25-17	
No. of Contacts and Size	2x #8	97x #22D	8x #8	6x #8	36x #22D

Contact Legend

#23	•	#22D	◐
#16	⊕	#20	⊖
#12	◒	#10	◕
#8	●		

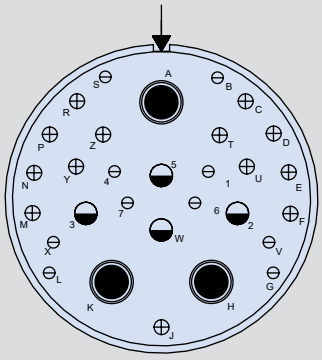

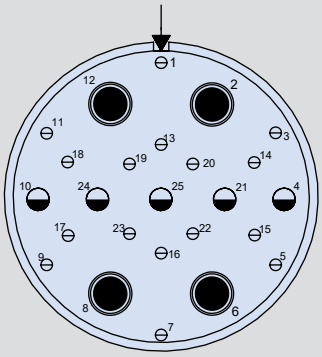

Insert Arrangement	25-20				25-26		
No. of Contacts and Size	3x #8	4x #12	13x #16	10x #20	4x #8	5x #12	16x #20

Contact Legend

#23	•	#22D	◐
#16	⊕	#20	⊖
#12	◒	#10	◕
#8	●		

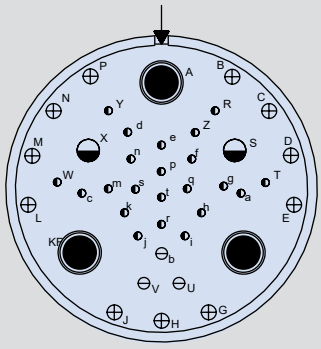

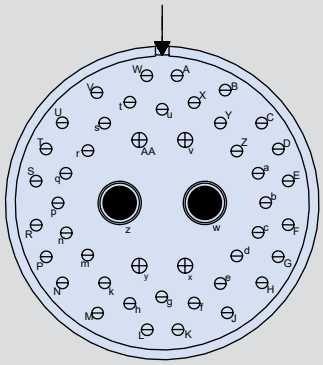

Insert Arrangement	25-41					25-46 and 25-90		
No. of Contacts and Size	3x #8	2x #12	11x #16	3x #20	22x #22D	2x #8	4x #16	40x #20

© 2022 Glenair, Inc • 1211 Air Way, Glendale, CA 91201 • 818-247-6000 • www.glenair.com • U.S. CAGE code 06324 • SuperNine® Catalog
Dimensions in Inches (millimeters) are subject to change without notice.

SuperNine® High-Speed Series

MIL-DTL-38999 Series III Type Environmental Connectors

Performance specifications | material and finish | panel cut-outs

PERFORMANCE SUMMARY

Standard Material and Finishes

- Shell, barrel and coupling nut: aluminum alloy 6061 per ASTM-B211. Composite jam-nut mount connector is provided with aluminum alloy jam-nut.
- Grounding spring: BeCu alloy/electroless nickel finish
- Insulator: high-grade rigid dielectric. For common ground option, aluminum alloy.
- Seals, grommet, O-ring: fluorosilicone
- Contact: grommet follower ordered separately
- Stainless steel and other materials and finishes available

Shell Type and Sizes

- Shell Type: D38999 Series III Type
- Shell sizes: 9, 11, 13, 17, 19, 21, 23, 25

Environmental / Mechanical Performance

- Sealing: IP67 mated condition, when proper backshell is used
- Outgassing: UL94 V0 low smoke, zero halogen
- Operating Temperature Range: -65°C to +200°C
- Vibration: 43.9g's, 3 Axis, 50 - 2000 Hz
- Mechanical Shock: 300 g's
- Backshell Interface: MIL-DTL-38999
- Durability (Mating Cycles): 500

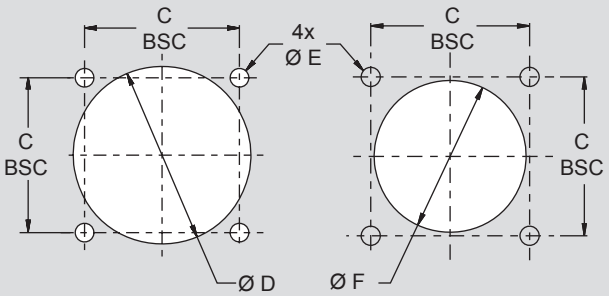

Square Flange Rear Panel Mount | **Square Flange Front Panel Mount**

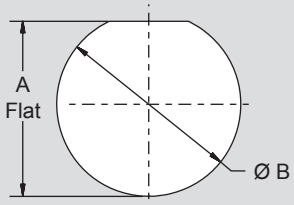

Jam Nut

Available Non-Standard Mounting Options	
Sym	**Description**
00	Receptacle, wall mount with slotted holes
D0	Receptacle, wall mount with round holes
CM	Receptacle, wall mount with metric clinch nuts
CS	Receptacle, wall mount with standard clinch nuts
HM	Receptacle, wall mount with metric helicoil
HS	Receptacle, wall mount with standard helicoil
TM	Receptacle, wall mount with metric tapped holes
TS	Receptacle, wall mount with standard tapped holes

Materials and Finishes		
Sym	**Material**	**Finish Description**
ME	Aluminum	Electroless nickel
MT		Ni-PTFE 500 hour nickel fluorocarbon polymer
NF		Cadmium O.D. Over electroless nickel
ZR		Black zinc-nickel over electroless nickel
T0	Titanium	Natural, unplated
TP3		Electro-deposited nickel
Z1	Stainless Steel	Passivate
ZL		Electro-deposited nickel
AB	Marine Bronze	Unplated

Recommended Panel Cut-Out Dimensions							
		Jam-nut Mount		Square Flange Mount			
Shell Size Code	**Shell Size**	**A Flat**	**B Dia**	**C BSC**	**D Dia Min**	**E Dia Flange Holes**	**F Dia Min**
A	9	.661/.654 (16.79/16.61)	.703/.693 (17.58/17.60)	.719 (18.26)	.656 (16.66)	.133/.123 (3.38/3.12)	.516 (13.12)
B	11	.771/.761 (19.58/19.33)	.835/.825 (21.21/20.96)	.812 (20.62)	.796 (20.22)		.625 (15.88)
C	13	.955/.945 (24.26/24.00)	1.020/1.010 (25.91/25.65)	.906 (23.01)	.922 (23.42)		.750 (19.05)
D	15	1.085/1.075 (27.56/27.31)	1.145/1.135 (29.08/28.83)	.969 (24.61)	1.047 (26.59)		.906 (23.01)
E	17	1.210/1.200 (30.73/30.48)	1.270/1.260 (32.26/32.00)	1.062 (26.97)	1.219 (30.96)		1.016 (25.81)
F	19	1.335/1.325 (33.91/33.66)	1.395/1.385 (35.43/35.18)	1.156 (29.36)	1.297 (32.94)		1.141 (28.98)
G	21	1.460/1.450 (37.08/36.83)	1.520/1.510 (38.61/38.35)	1.250 (31.75)	1.422 (36.12)		1.266 (32.16)
H	23	1.585/1.575 (40.26/40.01)	1.645/1.635 (41.78/41.53)	1.375 (34.93)	1.547 (39.29)	.159/.149 (4.04/3.78)	1.375 (34.93)
J	25	1.710/1.700 (43.43/43.18)	1.770/1.760 (44.96/44.70)	1.500 (38.10)	1.672 (42.47)	.155/.145 (3.94/3.68)	1.484 (37.69)

© 2018 Glenair, Inc • 1211 Air Way, Glendale, CA 91201 • 818-247-6000 • www.glenair.com • U.S. CAGE code 06324 • SuperNine® Catalog
Dimensions in Inches (millimeters) are subject to change without notice.



El Ochito®: The Ultimate High-Speed Contact

"The Little Eight": Eight miniaturized contacts in a standard size #8 shielded module, with dramatic size and weight reduction compared to all other available solutions

- **El Ochito® for 10G Ethernet (white), USB 3.0 (blue), and Multi gigabit datalink applications such as HDMI, SATA and Displayport (red).**
- **Fast and easy crimp termination of wires to contacts—PC Tails available**
- **100% drop-in solution for installed Glenair High-Speed connectors—no redesign or reinstallation of interfaces**
- **Supplied as crimp contacts, wire pigtails, or in PC tail configurations in the connector of your choice—up to 8 El Ochito® modules in a size #25 D38999**
- **Integral spline and short termination maximizes interconnect/cable performance and minimizes crosstalk**
- **El Ochito® delivers the highest density contact system available—twice the density of Quadrax, split Quadrax, or other shielded contact solutions**
- **Tested, qualified, and in-stock for immediate shipment**

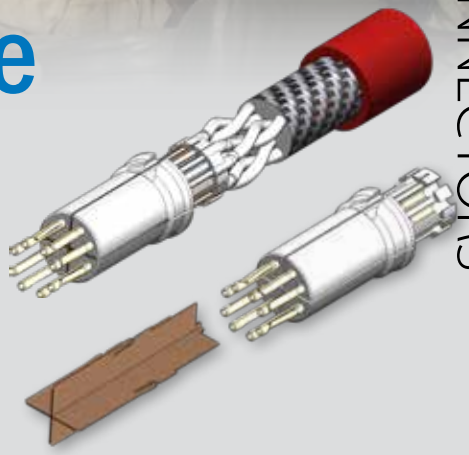

El Ochito® exploded view: High mating durability, lightweight contact system with 100 Ohm shielded performance. Note wire twist maintained to contact pair to minimize characteristic impedance mismatch. Also, Conductive isolation shield dramatically reduces crosstalk



El Ochito® is a drop-in solution for D38999 Series III, as well as, Series 80 Mighty Mouse, EN4165, EN3645, Series 792 and other ARINC standards and is ideally suited for Ethernet, high-definition video, high-speed data loading, and other high speed applications.

© 2022 Glenair, Inc • 1211 Air Way, Glendale, CA 91201 • 818-247-6000 • www.glenair.com • U.S. CAGE code 06324 • SuperNine® Catalog

Dimensions in Inches (millimeters) are subject to change without notice.

ADVANCED PERFORMANCE

SuperNine® High-Speed Series

MIL-DTL-38999 Series III Type Environmental Connectors

El Ochito® octaxial aerospace-grade contacts

El Ochito®

The Octaxial Contact with Patented Data Pair Isolator Technology



"Ochito White"

1000BASE-T
10GBASE-T



"Ochito Red"

Multi-Gigabit Datalinks
HDMI, SATA
Displayport



"Ochito Blue"

SuperSpeed USB



- **10GBASE-T, SuperSpeed USB, and multi-gigabit shielded pairs**
- **Data pair isolation technology**
- **Snap-in, rear release**
- **Environmentally protected**
- **Aerospace-grade performance**

El Ochito® contacts are intended for harsh environment military and aerospace data networks. El Ochito® "White" octaxial contacts simplify the task of upgrading military and aerospace platforms to meet the high data rate demands of 1000BASE-T and 10GBASE-T. Metal spline isolates data pairs for improved signal integrity. "Ochito Red" contacts support multi-gigabit data protocols such as HDMI and DisplayPort. 90 ohm Ochito "Blue" contacts support SuperSpeed USB. El Ochito® contacts are compatible with Series 23 SuperNine® (MIL-DTL-38999 Series III) connectors with keyed size 8 contact cavities.

TYPE I EL OCHITO: 26 AWG, NON-SERVICEABLE, CRIMP SHIELD TERMINATION

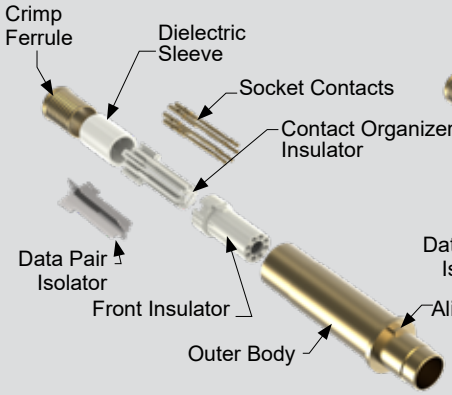

Type I Pin Contact

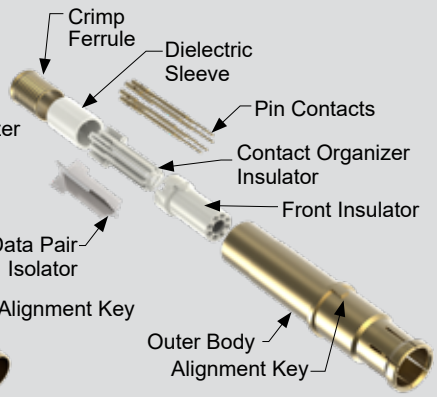

Type I Socket Contact

TYPE II EL OCHITO: 24-26 AWG, SERVICEABLE, THREADED SHIELD TERMINATION, INTEGRAL RELEASE SLEEVE

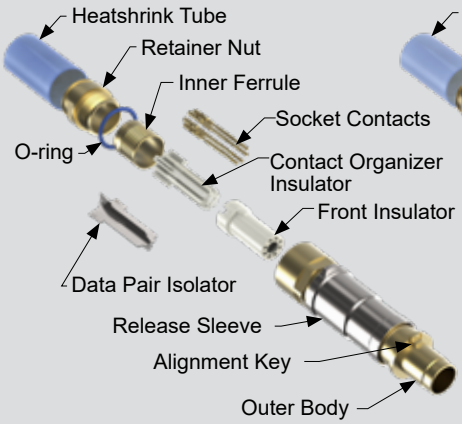

Type II Pin Contact

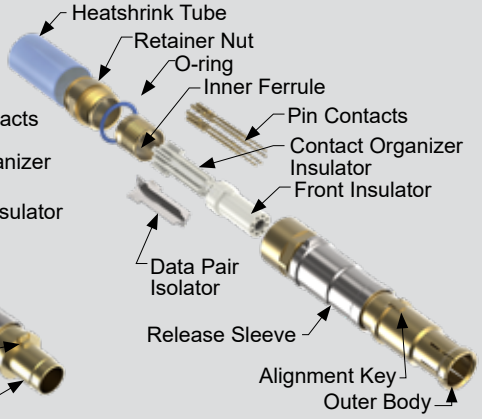

Type II Socket Contact

© 2022 Glenair, Inc • 1211 Air Way, Glendale, CA 91201 • 818-247-6000 • www.glenair.com • U.S. CAGE code 06324 • SuperNine® Catalog
Dimensions in Inches (millimeters) are subject to change without notice.

SuperNine® High-Speed Series

MIL-DTL-38999 Series III Type Environmental Connectors

El Ochito® octaxial "White," "Blue," and "Red" contact specifications

Ochito "White"



1000BASE-T/10GBASE-T

El Ochito® "White" octaxial contacts provide 10 Gigabit Ethernet in the same size as 100BASE-T Quadrax contact

- **-65°C to +175°C**
- **100 ohms**
- **24 and 26 AWG**
- **Type I and Type II**

Ochito "Blue"



SuperSpeed USB

Low-dielectric material. Up to 5 Gbps. 90 ohms. El Ochito® "Blue" octaxial contacts provide an aerospace-grade solution for SuperSpeed USB.

- **-65°C to +125°C**
- **90 ohms**
- **Type I only**

Ochito "Red"



HDMI, Displayport, SATA

Low-dielectric material. Up to 5 Gbps. 100 ohms. El Ochito® "Red" octaxial contacts provide an aerospace-grade solution for multi-gigabit data rates.

- **-65°C to +125°C**
- **100 ohms**
- **26 AWG**
- **Type I only**

Specifications

Specifications

- **Operating temperature**:
  El Ochito® White: -65° to +175°C
  El Ochito® Blue: -65° to +125°C
  El Ochito® Red: -65° to +125°C
- **Impedance**:
  El Ochito® White: 100 ohms
  El Ochito® Blue: 90 ohms
  El Ochito® Red: 100 ohms
- **DWV:** 500 Vrms
- **Current Rating**: 1.5 A
- **IR**: 5000 megohms min.
- **Durability:** 500 mating cycles
- **Vibration**: MIL-DTL-38999 Series III
- **Shock**: MIL-DTL-38999 Series III

Construction

- **Inner contacts, outer contact, ferrules, retaining nut**: copper alloy, 50 microinches gold over nickel plating
- **Insulators**:
  El Ochito® White: PPS, natural color
  El Ochito® Blue: low-dielectric constant thermoplastic, blue
  El Ochito® Red: low-dielectric constant thermoplastic, red
- **O-ring**: fluorosilicone
- **Heatshrink tubing**: PVDF
- **Contact release sleeve**: stainless steel, passivated
- **Sealing boot grommet**: fluorosilicone
- **Sealing boot body**: rigid thermoplastic, PEI or equivalent
- **Spline, El Ochito® White**: copper alloy, nickel plating
- **Spline, El Ochito® Red and Blue**: Polyimide

Contacts, Cable Options, and Protocols

Wire Size	Cable Type	Cable		Type I Ochito		Type II Ochito	
		Glenair Part No. (Mfgr. P/N)	Cable Dia.	Pin Contact Assembly Instr.	Skt Contact Assembly Instr.	Pin Contact Assembly Instr.	Skt Contact Assembly Instr.
1000BASE-T, 10GBASE-T; el Ochito "White"							
24	S/UTP	963-037-24 (PIC E6A3824)	.260 (6.60)	--	--	858-005-03B AI85097-03	858-006-03B AI85097-03
	S/FTP	963-033-24 (Gore RCN9047-24)	.260 (6.60)	--	--	858-005-04B AI85097-04	858-006-04B AI85097-04
26	S/UTP	963-003-26 (PIC E6A3826)	.220 (5.56)	858-003-01F AI85048-01	858-004-01F AI85048-01	858-005-01B AI85097-01	858-006-01B AI85097-01
	S/FTP	963-033-26 (Gore RCN9047-26)	.220 (5.56)	858-003-02F AI85048-02	858-004-02F AI85048-02	858-005-02B AI85097-01	858-006-02B AI85097-01
SuperSpeed USB; el Ochito "Blue"							
26	USB 3.0	963-118	.217 (5.51)	858-028-01F AI85114-02	858-029-01F AI85114-02	858-069-01B AI85158-01	858-070-01B AI85158-01
	USB 3.0	963-110	.236 (5.99)	858-028-02F AI85090-01	858-029-02F AI85090-01	858-069-02B AI85158-02	858-070-02B AI85158-02
HDMI, Displayport and SATA; el Ochito "Red"							
26	Cat 6a S/FTP	963-033-26 (Gore RCN9047-26)	.220 (5.56)	858-030-02F AI85048-02	858-031-02F AI85048-02	858-063-01B AI85149-02	858-064-01B AI85149-02
24	Cat 6a S/FTP	963-033-24	.217 (5.51)	--	--	858-063-02B AI85149-04	858-064-02B AI85149-04

© 2022 Glenair, Inc • 1211 Air Way, Glendale, CA 91201 • 818-247-6000 • www.glenair.com • U.S. CAGE code 06324 • SuperNine® Catalog
Dimensions in Inches (millimeters) are subject to change without notice.

ADVANCED PERFORMANCE

SuperNine® High-speed Series

MIL-DTL-38999 Series III Type Environmental Connectors

El Ochito® "White" signal integrity data

10GBase-T Category 6A Compliance Testing for El Ochito® White

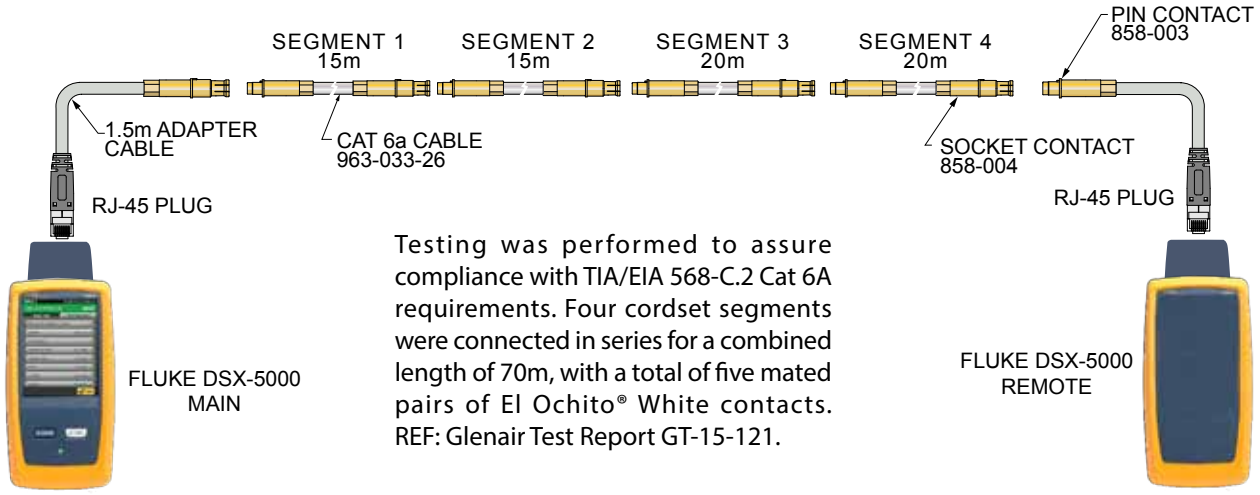

Testing was performed to assure compliance with TIA/EIA 568-C.2 Cat 6A requirements. Four cordset segments were connected in series for a combined length of 70m, with a total of five mated pairs of El Ochito® White contacts. REF: Glenair Test Report GT-15-121.

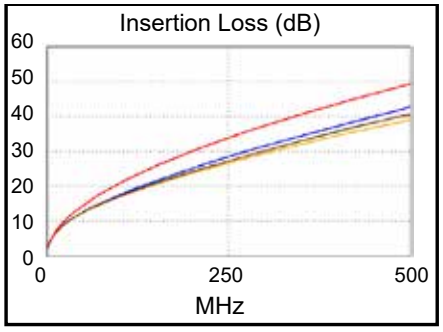

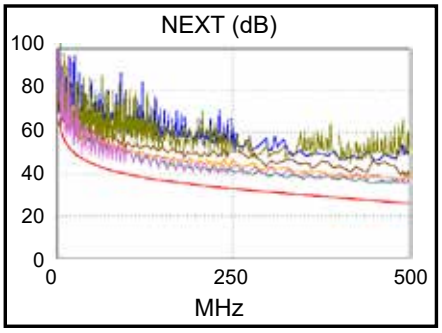

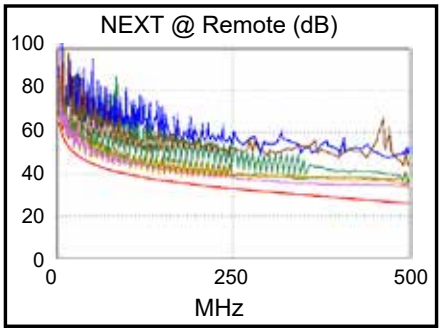

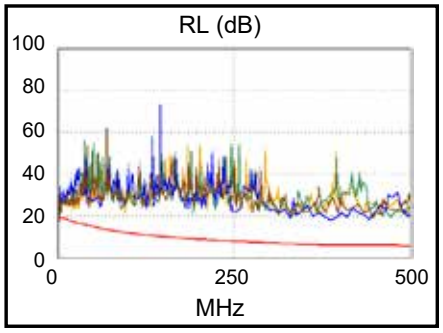

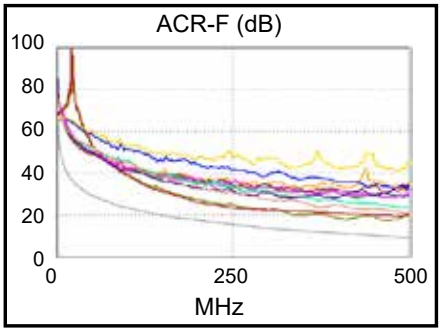

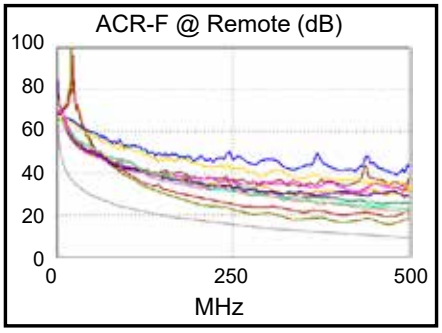

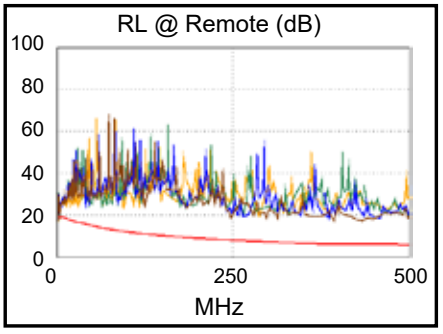

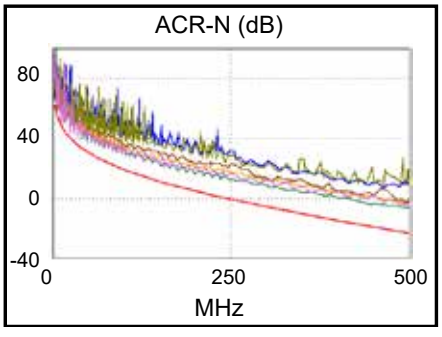

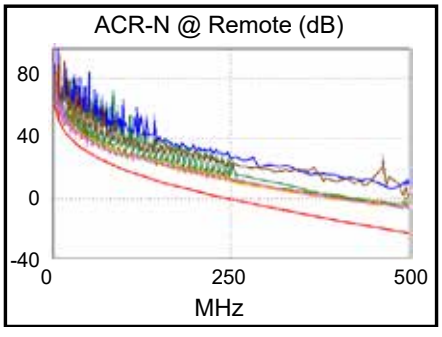

© 2022 Glenair, Inc • 1211 Air Way, Glendale, CA 91201 • 818-247-6000 • www.glenair.com • U.S. CAGE code 06324 • SuperNine® Catalog
Dimensions in Inches (millimeters) are subject to change without notice.

SuperNine® High-speed Series

MIL-DTL-38999 Series III Type Environmental Connectors

El Ochito® "Blue" signal integrity data

SuperSpeed USB Compliance Testing for El Ochito® Blue

TDR Profile
50ps RT 20%-80%
El Ochito® Blue
PC tail contact to
Cable Assembly

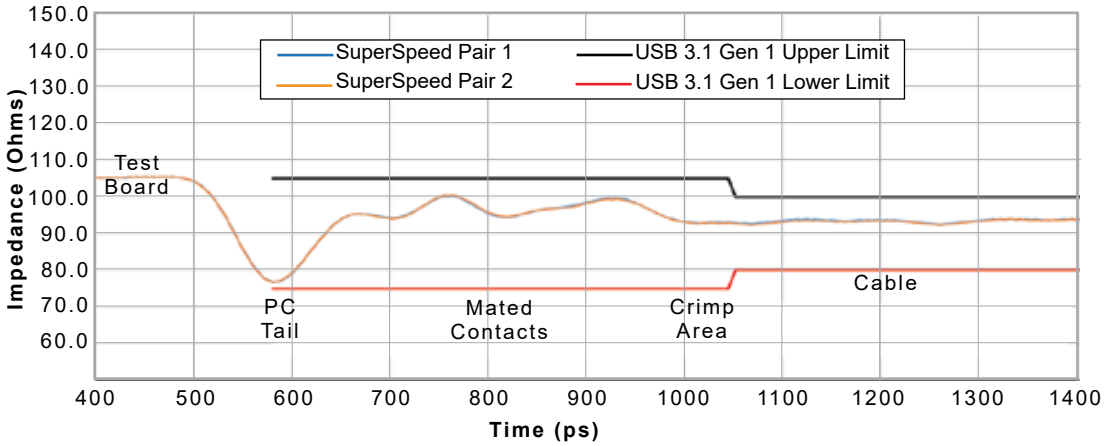

De-Embedded Insertion Loss
El Ochito® Blue
Cable Assembly

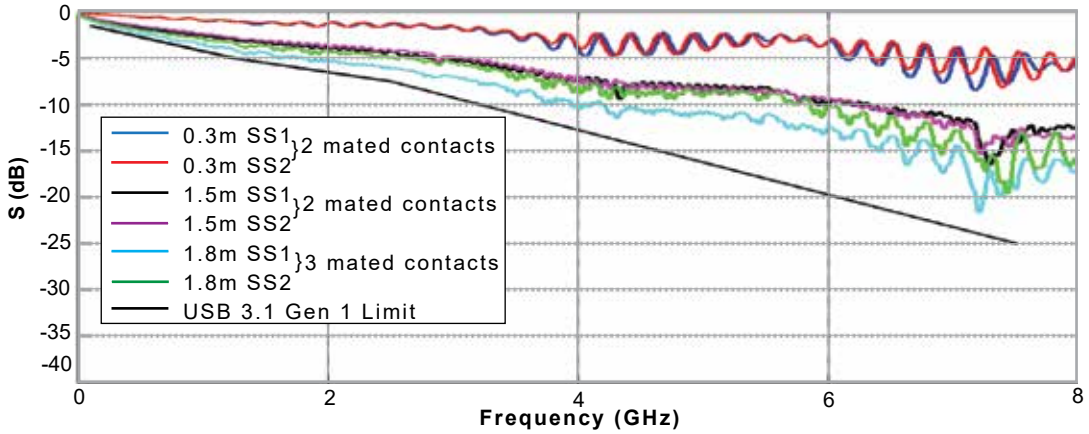

NEXT (SuperSpeed Pairs)
El Ochito® Blue Cable Assembly

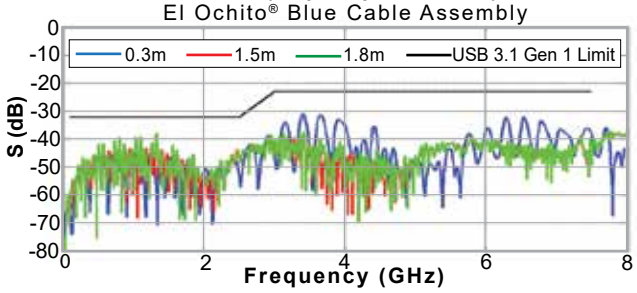

NEXT (SuperSpeed to D+/D-)
El Ochito® Blue Cable Assembly

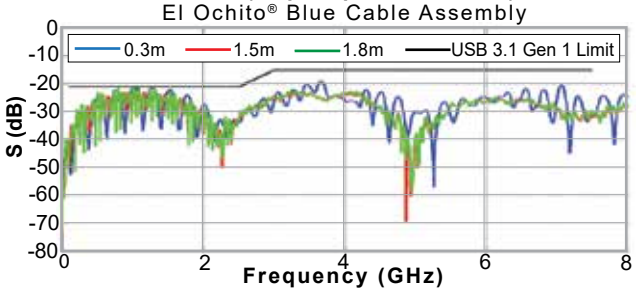

FEXT (SuperSpeed to D+/D-)
El Ochito® Blue Cable Assembly

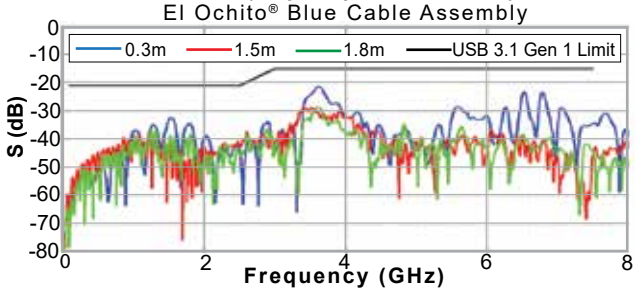

Mode Conversion (SCD21)
El Ochito® Blue Cable Assembly

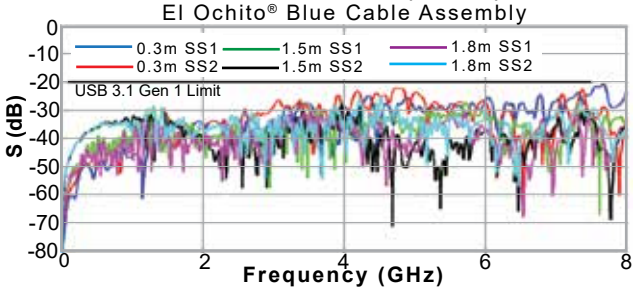

© 2022 Glenair, Inc • 1211 Air Way, Glendale, CA 91201 • 818-247-6000 • www.glenair.com • U.S. CAGE code 06324 • SuperNine® Catalog
Dimensions in Inches (millimeters) are subject to change without notice.

SuperNine® High-speed Series

MIL-DTL-38999 Series III Type Environmental Connectors

El Ochito® octaxial pin and socket contacts

El Ochito® Type I Pin Contact 858-003, 858-028, and 858-030

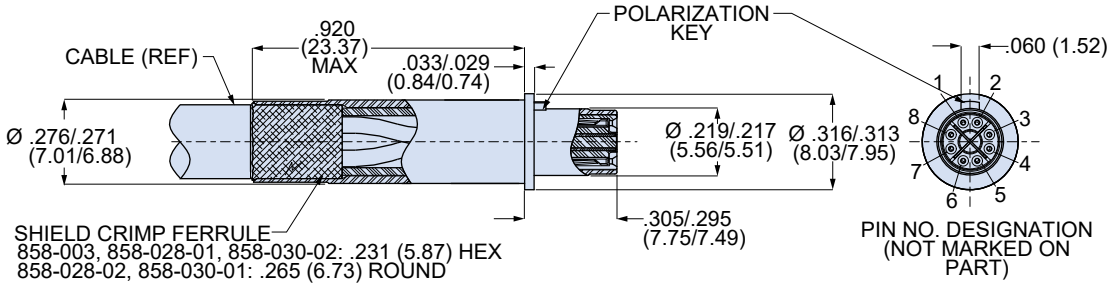

El Ochito® Type I Socket Contact 858-004, 858-029, and 858-031

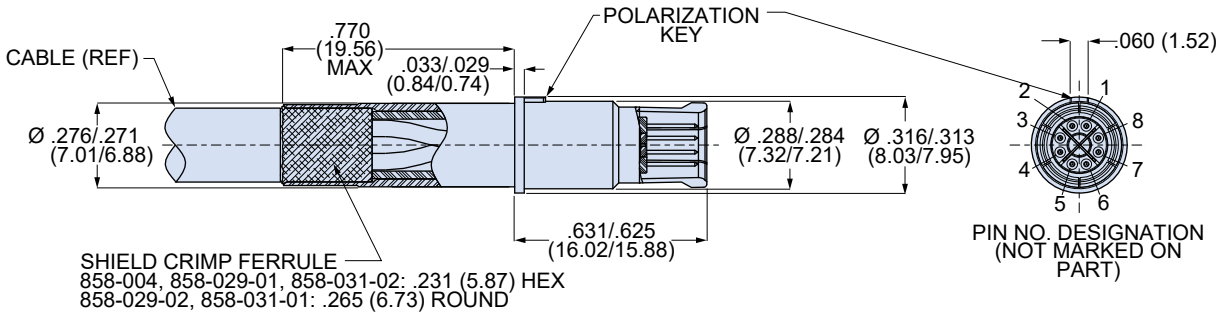

El Ochito® Type II Pin Contact 858-005

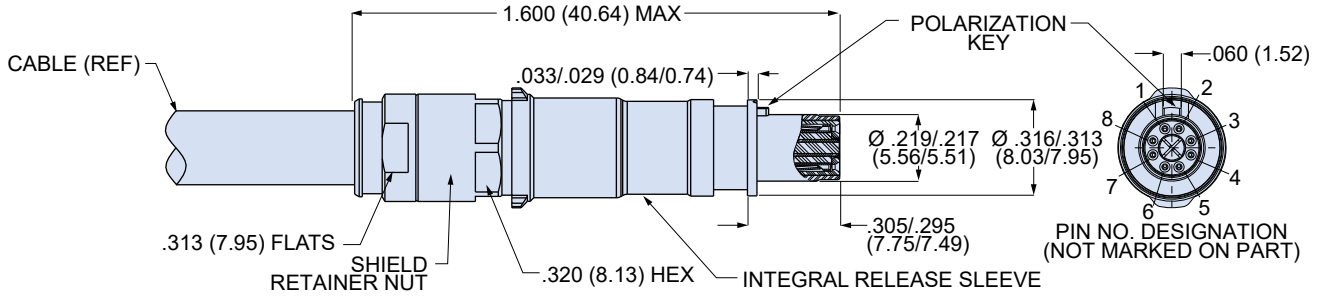

El Ochito® Type II Socket Contact 858-006

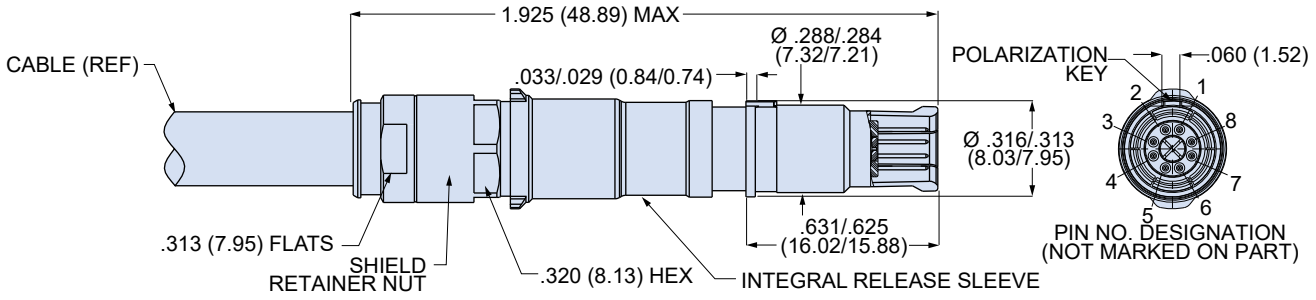

© 2022 Glenair, Inc • 1211 Air Way, Glendale, CA 91201 • 818-247-6000 • www.glenair.com • U.S. CAGE code 06324 • SuperNine® Catalog
Dimensions in Inches (millimeters) are subject to change without notice.

El Ochito® Blue Type II Pin Contact 858-069

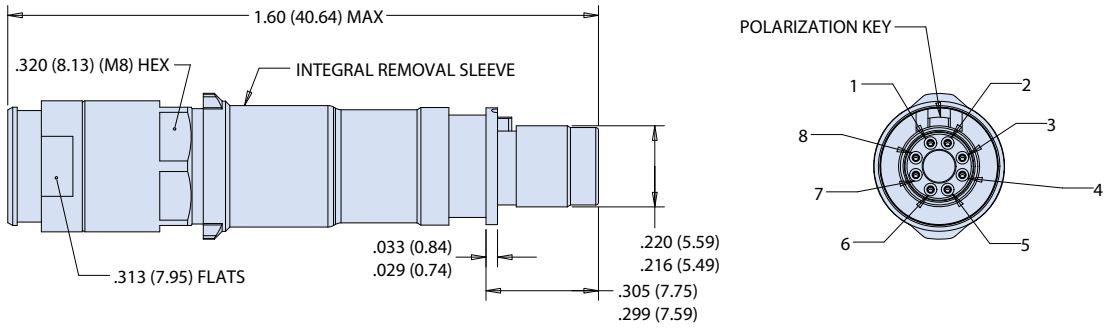

El Ochito® Blue Type II Pin Contact 858-070

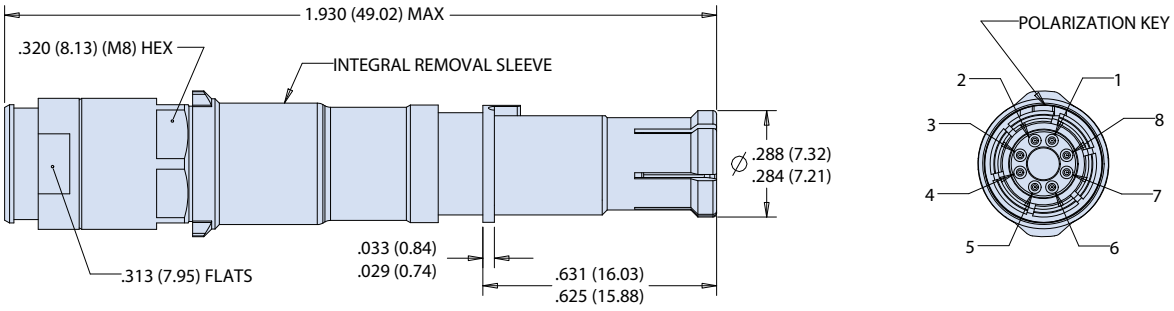

El Ochito® Red Type II Pin Contact 858-063

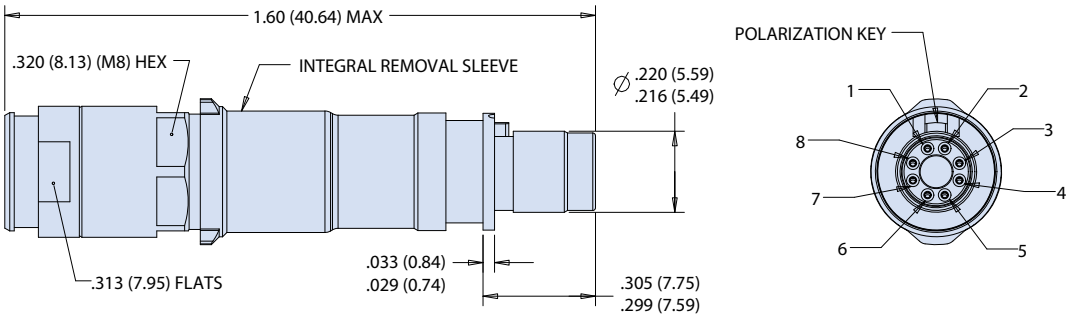

El Ochito® Red Type II Socket Contact 858-064

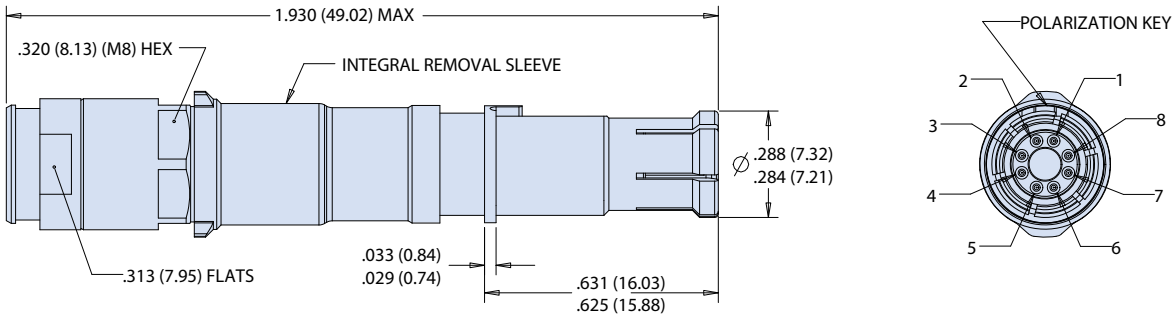

© 2022 Glenair, Inc • 1211 Air Way, Glendale, CA 91201 • 818-247-6000 • www.glenair.com • U.S. CAGE code 06324 • SuperNine® Catalog
Dimensions in Inches (millimeters) are subject to change without notice.

SIZE 8 COAX CONTACT

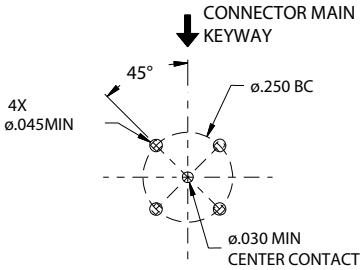

RECOMMENDED CO-AX PCB LAYOUT

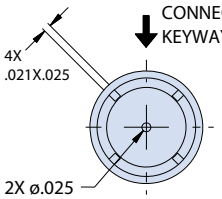

REAR VIEW

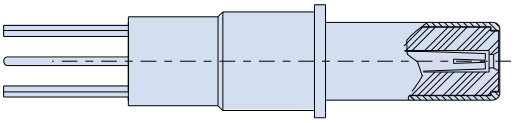

SIZE #8 CO-AX PIN, PC TAIL DETAIL
C = INTERFACE PER M39029/60 (50 OHM)
C1 = INTERFACE PER 852-056 (75 OHM)

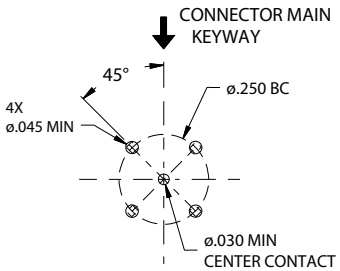

RECOMMENDED CO-AX PCB LAYOUT

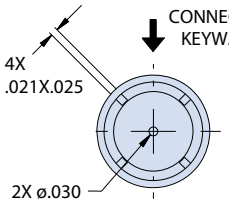

REAR VIEW

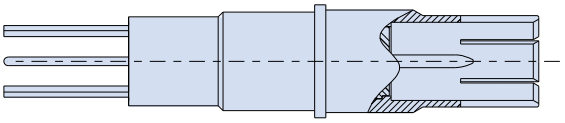

SIZE #8 CO-AX SOCKET, PC TAIL DETAIL
C = INTERFACE PER M39029/59 (50 OHM)
C1 = INTERFACE PER 852-057 (75 OHM)

SIZE 12 COAX CONTACT

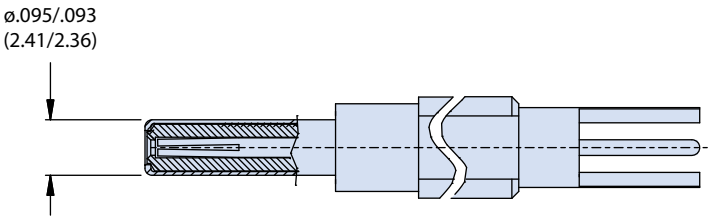

SIZE #12 COAX CONTACT PIN, PC TAIL DETAIL
INTERFACE PER M39029/102

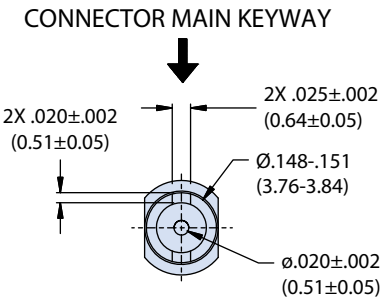

CONTACT REAR VIEW
AND INTERFACE REQUIREMENTS

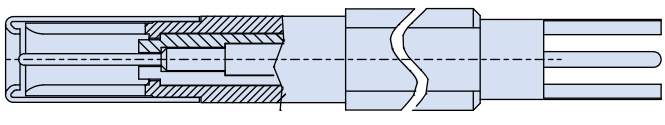

SIZE #12 COAX CONTACT SOCKET, PC TAIL DETAIL
INTERFACE PER M39029/103

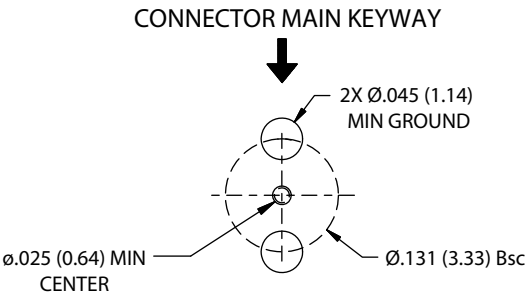

RECOMMENDED PCB FOOTPRINT

© 2022 Glenair, Inc • 1211 Air Way, Glendale, CA 91201 • 818-247-6000 • www.glenair.com • U.S. CAGE code 06324 • SuperNine® Catalog
Dimensions in Inches (millimeters) are subject to change without notice.

DIFFERENTIAL TWINAX

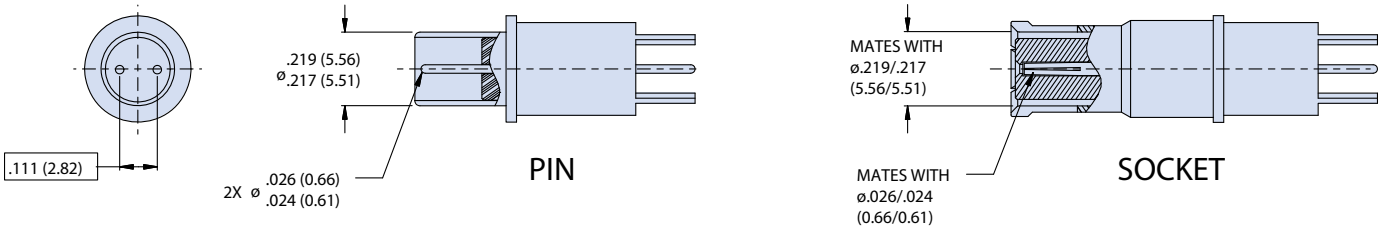

TWINAX CONTACT DETAILS

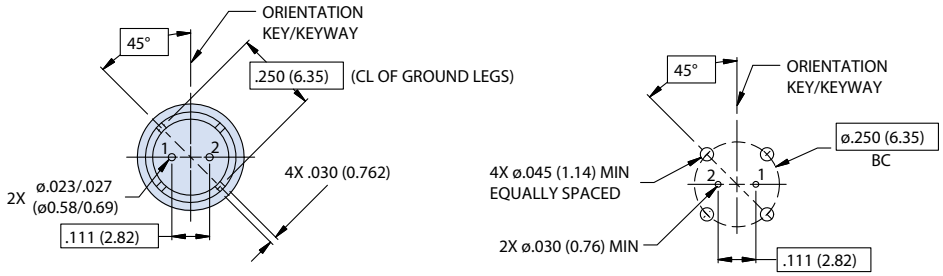

REAR VIEW OF DIFFERENTIAL TWINAX PIN CONTACT (REAR) SHOWN. PIN NO'S ARE FOR REF ONLY AND SHALL NOT BE MARKED.

RECOMMENDED PC BOARD LAYOUT

QUADRAX

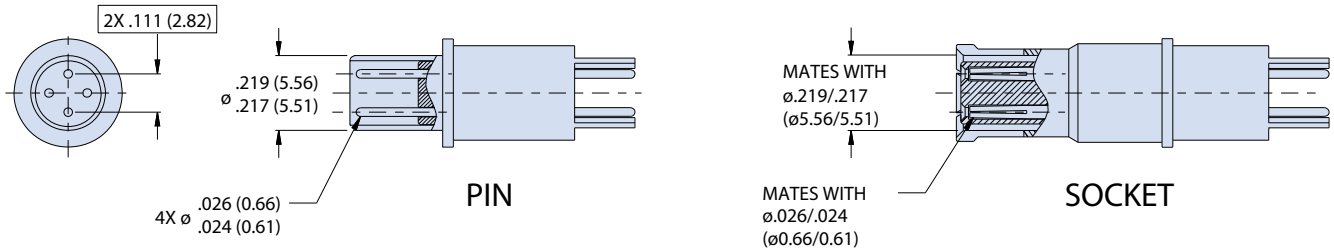

QUADRAX CONTACT DETAILS

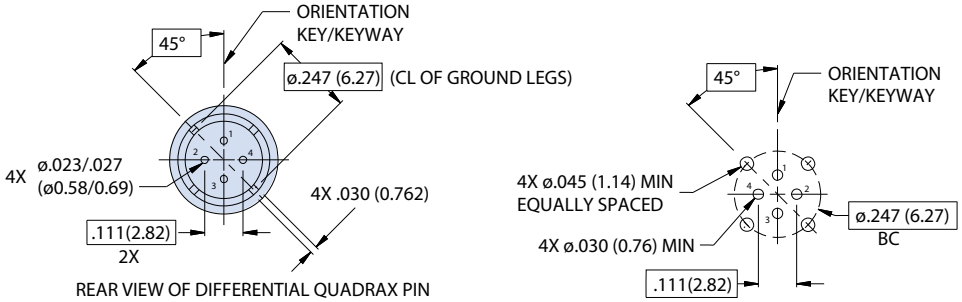

REAR VIEW OF DIFFERENTIAL QUADRAX PIN CONTACT (REAR) SHOWN. PIN NO'S ARE FOR REF ONLY AND SHALL NOT BE MARKED.
(REF: DIFERENTIAL PAIRS: 1 & 3; 2 & 4)

RECOMMENDED PC BOARD LAYOUT

© 2022 Glenair, Inc • 1211 Air Way, Glendale, CA 91201 • 818-247-6000 • www.glenair.com • U.S. CAGE code 06324 • SuperNine® Catalog

Dimensions in Inches (millimeters) are subject to change without notice.

SuperNine® High-Speed Series

MIL-DTL-38999 Series III Type Environmental Connectors

Shielded PC tail contacts - dimensions and footprints

CONCENTRIC TWINAX

CONCENTRIC TWINAX PIN

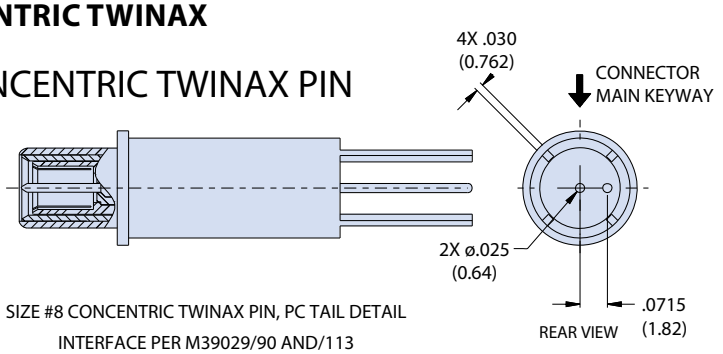

SIZE #8 CONCENTRIC TWINAX PIN, PC TAIL DETAIL
INTERFACE PER M39029/90 AND/113

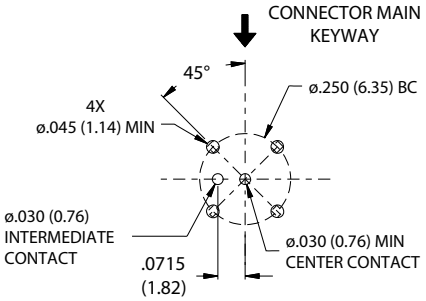

RECOMMENDED
TWINAX PCB LAYOUT

CONCENTRIC TWINAX SOCKET

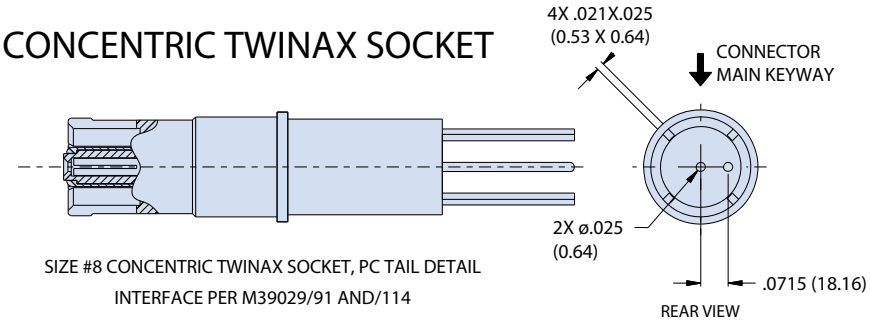

SIZE #8 CONCENTRIC TWINAX SOCKET, PC TAIL DETAIL
INTERFACE PER M39029/91 AND/114

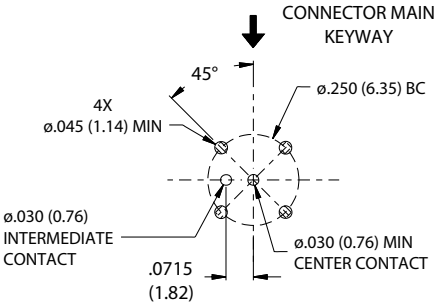

RECOMMENDED
TWINAX PCB LAYOUT

EL OCHITO®

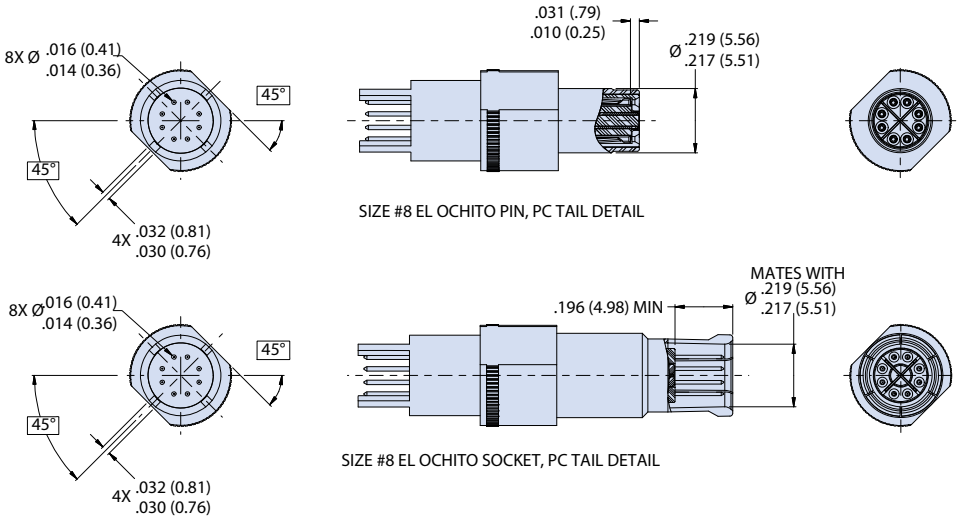

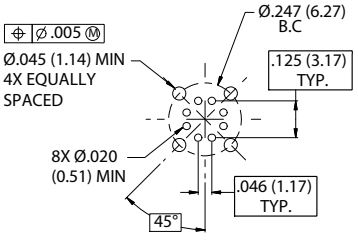

RECOMMENDED PC BOARD LAYOUT

For optimal performance, see Glenair Application Note AN0002.

© 2022 Glenair, Inc • 1211 Air Way, Glendale, CA 91201 • 818-247-6000 • www.glenair.com • U.S. CAGE code 06324 • SuperNine® Catalog
Dimensions in Inches (millimeters) are subject to change without notice.

SuperNine® High-Speed Series

MIL-DTL-38999 Series III Type Environmental Connectors

El Ochito® contact configuration and Mod Code 909

El Ochito Contact Configuration

SYM	CAVITY A	CAVITY B	CAVITY C	CAVITY D	CAVITY E	CAVITY F	CAVITY G	CAVITY H
E	W	W	W	W	W	W	W	W
E2	B	W	W	W	W	W	W	W
E3	R	W	W	W	W	W	W	W
E4	B	B	W	W	W	W	W	W
E5	R	B	W	W	W	W	W	W
E6	R	R	W	W	W	W	W	W
E7	B	B	B	W	W	W	W	W
E8	R	B	B	W	W	W	W	W
E9	R	R	B	W	W	W	W	W
E10	R	R	R	W	W	W	W	W
E11	B	B	B	B	W	W	W	W
E12	R	B	B	B	W	W	W	W
E13	R	R	B	B	W	W	W	W
E14	R	R	R	B	W	W	W	W
E15	R	R	R	R	W	W	W	W
E16	B	B	B	B	B	W	W	W
E17	R	B	B	B	B	W	W	W
E18	R	R	B	B	B	W	W	W
E19	R	R	R	B	B	W	W	W
E20	R	R	R	R	B	W	W	W
E21	R	R	R	R	R	W	W	W
E22	B	B	B	B	B	B	W	W
E23	R	B	B	B	B	B	W	W

El Ochito Contact Configuration

SYM	CAVITY A	CAVITY B	CAVITY C	CAVITY D	CAVITY E	CAVITY F	CAVITY G	CAVITY H
E24	R	R	B	B	B	B	W	W
E25	R	R	R	B	B	B	W	W
E26	R	R	R	R	B	B	W	W
E27	R	R	R	R	R	B	W	W
E28	R	R	R	R	R	R	W	W
E29	B	B	B	B	B	B	B	W
E30	R	B	B	B	B	B	B	W
E31	R	R	B	B	B	B	B	W
E32	R	R	R	B	B	B	B	W
E33	R	R	R	R	B	B	B	W
E34	R	R	R	R	R	B	B	W
E35	R	R	R	R	R	R	B	W
E36	R	R	R	R	R	R	R	W
E37	B	B	B	B	B	B	B	B
E38	R	B	B	B	B	B	B	B
E39	R	R	B	B	B	B	B	B
E40	R	R	R	B	B	B	B	B
E41	R	R	R	R	B	B	B	B
E42	R	R	R	R	R	B	B	B
E43	R	R	R	R	R	R	B	B
E44	R	R	R	R	R	R	R	B
E45	R	R	R	R	R	R	R	R

R= Red B = Blue W = White

Modification Code 909

Modification code 909xx is used to supply D38999 Series III Type connectors (Glenair 233, 257, and 2570 families) featuring crimp removable type contacts with high-speed contact kits. Kits include spares, tools, and sealing plugs. See example below.

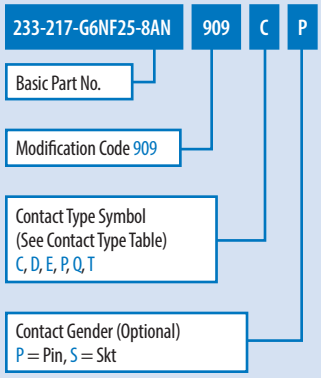

Table II: Contact Type

Sym	Description	Glenair P/N	Contact Size	AWG Size	Wire Type	Grommet Follower	Application Notes
C	Coax per M39029/76 & /77;	Pin: 852-008-16-424 Skt: 852-009-16-428	16	Coax Cable	RG174, RG316, RG179	N/A	Analog radio frequency or microwave applications
	Coax per M39029/102 & /103	Pin: 852-004-12-558 Skt: 852-005-12-559	12	Coax Cable	RG174, RG316, RG179	N/A	
	Coax per M39029/59 & /60	Pin: 852-007-08-367 Skt: 852-006-08-366	8	Coax Cable	M17 /95-RG180	859-042-02	
C1	Coax per 75 ohm	Pin: 852-103-01 Skt: 852-106-01	12	Coax Cable	V73263, V75268, V76261	N/A	Aerospace-grade digital video
		Pin: 852-056-01F Skt: 852-057-01F	8			859-042-01	
D	Differential twinax	Pin: 853-014-05 Skt: 853-013-05	8	24	M17 /176-00002	859-042-01	1553 databus / differential signal
E*	El Ochito®	White Pin: 858-003-02F Skt: 858-004-02F	8	26	963-003-26 963-033-26	687-643-8-2	1G/10G Base-T Ethernet (white)
	El Ochito®	Blue Pin: 858-028-02F Skt: 858-029-02F	8	24/26 to 30	963-110 & 963-118	687-643-8-2	USB 3.0 (Blue)
	El Ochito®	Red Pin: 858-030-02F Skt: 858-031-02F	8	26 to30	963-033-26	687-643-8-2	SATA 3.0 General High Speed (red)
P	Power	Pin: 850-014F Skt: 850-013F	8	8	M22759/11 or equivalent	859-042-03	Power
Q	Quadrax	Pin: 854-001-02 Skt: 854-002-02	8	24	963-020	859-042-02	10/100Base-T ethernet
T	Triax/Concentric Twinax	Pin: 853-003-08-625 Skt: 853-004-08-628	8	Twinax Cable	M17 /176-00002	859-042-01	1553 Databus

* See Table II for Contact Positions. See Figure 2 for orientation of inner pins relative to connector main key/keyway.

© 2022 Glenair, Inc • 1211 Air Way, Glendale, CA 91201 • 818-247-6000 • www.glenair.com • U.S. CAGE code 06324 • SuperNine® Catalog
Dimensions in Inches (millimeters) are subject to change without notice.

Rev. 11.20.23

SuperNine® High-speed Series

MIL-DTL-38999 Series III Type Environmental Connectors

El Ochito® octaxial contact and cable assembly tools and accessories

Assembly Tools

Contact PN	Inner Contact Crimp		Cable Shield Hex Crimp		Cable Shield Round Crimp			Key Alignment Tool	Rear Ferrule Insertion Tool
	Tool	Positioner	Tool	Hex Die	Tool	Positioner 1	Positioner 2		
858-003	809-015	859-101	809-129	859-007				600-236	600-242
858-004	809-015	859-101	809-129	859-007				600-235	600-242
858-005	809-015	859-101						600-236	
858-006	809-015	859-101						600-235	
858-028-01	809-015	859-101	809-129	859-007				600-236	600-242
858-028-02	809-015	859-101			859-134	859-184-2	859-184-3	600-236	600-242
858-029-01	809-015	859-101	809-129	859-007				600-235	600-242
858-029-02	809-015	859-101			859-134	859-184-1	859-184-2	600-235	600-242
858-030-02	809-015	859-101	809-129	859-007				600-236	600-242
858-031-02	809-015	859-101	809-129	859-007				600-235	600-242

Inner Contact Crimp Tools		Cable Shield Crimp Tools				Removal Tool
					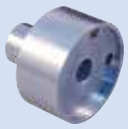	
809-015 (M22520/2-01)	859-101 (K1906)	809-129 (M22520/5-01)	859-007 (M22520/5-45)	859-134 (GS206)	859-184	859-049 (M81969/14-12)

Key Alignment Tools		Rear Ferrule Insertion Tool
		
600-235 **600-243** Socket contact	**600-236** **600-244** Pin contact	**600-242**

Contact factory for available alignment inspection tools for use with existing assemblies.

Sealing Boot

An "F" suffix in the contact part number indicates the contact is supplied with a sealing boot. To order these contacts without sealing boots, delete the "F" suffix from the part number. Sealing boots are not supplied with 858-005, 858-006, 858-009, 858-010, 858-035, 858-037, 858-038 and 858-039 contacts.

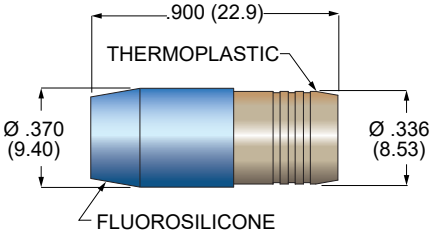

SEALING BOOT FOR OCHITO CONTACTS

687-754-8-8
FOR .220 (5.56) DIAMETER CABLES
687-754-8-9
FOR .236 (6.0) DIAMETER CABLES

© 2022 Glenair, Inc • 1211 Air Way, Glendale, CA 91201 • 818-247-6000 • www.glenair.com • U.S. CAGE code 06324 • SuperNine® Catalog
Dimensions in Inches (millimeters) are subject to change without notice.

SuperNine® High-speed Series

MIL-DTL-38999 Series III Type Environmental Connectors

600-280 El Ochito® installation kit



600-028 tool kit combines all the tools necessary to terminate El Ochito red, blue, and white contacts. Great for customers looking to terminate el Ochito® contacts to cables. Unit includes portable protective case with cutout foam for ease of transportation. Order by kit level for simplified ordering. Customize tool kit contents to meet your specific requirements. Additional foam cutout cavities allow for easy to upgrade your kit as you increase your el Ochito tool collection.

Part Number Development			
Sample Part Number	**600-280**	**-01**	
Product	**600-280** = El Ochito Installation Tool Kit		
Kit Number	**-01** = Basic Assembly **-04** = Basic Assembly + Crimp Dies, and Positioners **-07** = Basic Assembly+ Crimp Dies, Positioners and Crimp Tools		
Modifier	**Omit** = None **H** = Hex Crimp Only (See Table I)		

Kit 01: Basic Kit	
-01	
Tool Description	**P/N**
Socket El Ochito Alignment Tool	600-235
Pin El Ochito Alignment Tool	600-236
Ferrule Inserter	600-242

Table I: Items Removed By Modifier "H"[1]	
Tool Description	P/N
859-134 (GS206) Positioner 1	859-184-1
859-134 (GS206) Positioner 2	859-184-2
859-134 (GS206) Positioner 3	859-184-3
Circle Body Crimper (GS206)	859-134

Notes
Modifier "H" Removes all tools and dies associated with the circle body crimp. See Table II. Not applicable to "-01".

Kit -04: Basic Kit + Crimp Dies & Positioners	
-04	
Tool Description	**P/N**
Socket El Ochito Alignment Tool	600-235
Pin El Ochito Alignment Tool	600-236
Ferrule Inserter	600-242
Contact Positioner (K1906)	859-101
Body Hex Crimp Die (M22520/5-45)	859-007
859-134 (GS206) Positioner 1	859-184-1
859-134 (GS206) Positioner 2	859-184-2
859-134 (GS206) Positioner 3	859-184-3
Removal Tool (M81969/14-12)	859-049

Kit -07: Basic Kit + Crimp Dies & Positioners, and Crimp Tools	
-07	
Tool Description	**P/N**
Socket El Ochito Alignment Tool	600-235
Pin El Ochito Alignment Tool	600-236
Ferrule Inserter	600-242
Contact Positioner (K1906)	859-101
Body Hex Crimp Die (M22520/5-45)	859-007
859-134 (GS206) Positioner 1	859-184-1
859-134 (GS206) Positioner 2	859-184-2
859-134 (GS206) Positioner 3	859-184-3
Removal Tool (M81969/14-12)	859-049
Contact Crimper (M22520/2-01)	809-015
Hex Body Crimper (M22520/5-01)	809-129
Circle Body Crimper (GS206)	859-134

© 2022 Glenair, Inc • 1211 Air Way, Glendale, CA 91201 • 818-247-6000 • www.glenair.com • U.S. CAGE code 06324 • SuperNine® Catalog
Dimensions in Inches (millimeters) are subject to change without notice.

Shielded Contact Assembly Tools								
				Inner Contact		Cable Shield Hex		
Contact PN	Size	Cable Accomodated	Max Freq. (MHz)	Tool	Positioner	Tool	Hex Die	Insertion/ Removal Tool
852-008 M39029/76	16	RG174, RG316, RG178, RG179	500	809-015	809-125	809-127	809-126	809-131
852-009 M39029/77	16	RG174, RG316, RG178, RG179	500	809-015	809-125	809-127	809-126	
852-004 M39029/102	12	RG174, RG179, RG180, RG316	3K	809-128	859-006	809-129	809-130	809-132
852-005 M39029/103	12	RG174, RG179, RG180, RG316	3K	809-128	859-006	809-129	809-130	809-132
852-007 M39029/60-637	8	RG180	700	809-015	859-050	809-129	859-051	859-022
852-006 M39029/59-366	8	RG180	700	809-015	859-050	809-129	859-051	859-022
852-056-01 75 ohm	8	V75268, V76261, V73263	4K	809-015	809-240	809-129	859-047	859-049
852-056-02 75 ohm	8	RG179	4K	809-015	809-240	809-129	809-130	859-049
852-057-01 75 ohm	8	V75268, V76261, V73263	4K	809-015	809-240	809-129	859-047	859-049
852-057-02 75 ohm	8	RG179	4K	809-015	809-240	809-129	809-130	859-049
853-014	8	M17/176-00002	20	809-015	809-240	809-129	859-007	859-049
853-013	8	M17/176-00002	20	809-015	809-240	809-129	859-007	859-049
854-001	8	Tensolite NF26Q100	3K	809-015	809-240	809-129	859-007	859-049
	8	Tensolite NF24Q100, PIC E51424	3K	809-015	809-240	809-129	859-007	859-049
	8	Draka Fileca F 4704-6	3K	809-015	809-240	809-129	859-007	859-049
	8	Draka Fileca F 4704-4	3K	809-015	809-240	809-129	859-007	859-049
	8	Tensolite NF22Q100	3K	809-015	809-240	809-129	859-007	859-049
854-002	8	Tensolite NF26Q100	3K	809-015	809-240	809-129	859-007	859-049
	8	Tensolite NF24Q100, PIC E51424	3K	809-015	809-240	809-129	859-007	859-049
	8	Draka Fileca F 4704-6	3K	809-015	809-240	809-129	859-007	859-049
	8	Draka Fileca F 4704-4	3K	809-015	809-240	809-129	859-007	859-049
	8	Tensolite NF22Q100	3K	809-015	809-240	809-129	859-007	859-049
853-003 M39029/113-625	8	M17/176-00002	10K	809-015	809-240	809-129	859-048	859-048
853-004 M39029/114-628	8	M17/176-00002	10K	809-015	809-240	809-129	859-048	859-048

Please refer to section J for power and signal contact assembly tools

© 2022 Glenair, Inc • 1211 Air Way, Glendale, CA 91201 • 818-247-6000 • www.glenair.com • U.S. CAGE code 06324 • SuperNine® Catalog
Dimensions in Inches (millimeters) are subject to change without notice.

SuperNine® High-Speed Series

MIL-DTL-38999 Series III Type Environmental Connectors

24 AWG Category 6A Ethernet Cables 963-037 and 963-033

24 AWG S/UTP Cat 6A Cable

Glenair Part Number	963-037-24
Manufacturer Part Number	E6A3824
Manufacturer	PIC

S/UTP 24 AWG cable is specially designed for airborne 10 Gigabit Ethernet applications. Twisted pairs are separated by a fluoropolymer spline for reduced crosstalk and attenuation. This 200°C rated cable is Skydrol resistant, RoHS compliant and meets FAA FAR Parts 23 and 25 Appendix F flammability requirements. Laser-markable white PTFE jacket withstands abrasion and chemicals. Meets ANSI/TIA-568-C.2 Category 6A performance up to 246 feet.

Construction Details

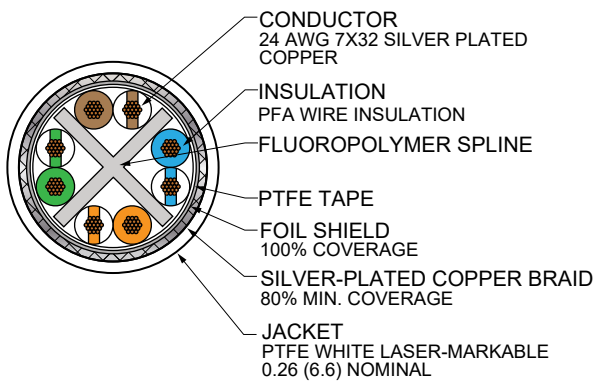

Color Code

Pair #1 Blue, White/Blue · Pair #2 Orange, White/Orange · Pair #3 Green, White/Green · Pair #4 Brown, White/Brown

Specifications

Impedance (ohms)	100 ±15	
Temperature Rating	-55° to +200°C	
Weight (lbs/100 ft.)	4.5	
Capacitance (pF/ft)	14.5	
Minimum Bend Radius (inches)	.78	
Velocity of Propagation %	70	
Dielectric Voltage Rating (kV rms)	1.5	
DC Resistance, Max (ohms/1000 ft.)	28.5	
Max Distance in Feet (m)	246 (75)	
Attenuation Nom / Max	**Frequency**	**dB/100 ft.**
	10 MHz	2.3 / 2.6
	100 MHz	7.0 / 8.4
	250 MHz	11.4/ 13.7
	500 MHz	16.5 / 20.0

24 AWG S/FTP Cat 6A Cable

Glenair Part Number	963-033-24
Manufacturer Part Number	RCN9034-24
Manufacturer	Gore

S/FTP 24 AWG cable has an individual foil shield around each data pair for reduced crosstalk and attenuation. This high data rate Ethernet cable features a unique cable jacket material and high-density construction that significantly reduces weight and diameter. Meets ANSI/TIA 568-C.2 Category 6A requirements up to 80 meters (262 feet). ***Qualified to SAE AS6070.***

Construction Details

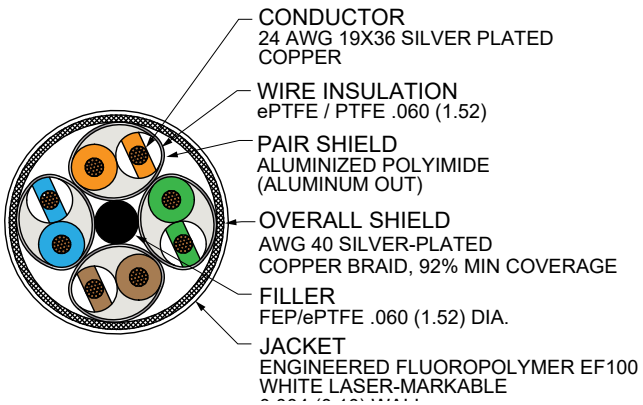

Color Code

Pair #1 Blue, White/Blue · Pair #2 Orange, White/Orange · Pair #3 Green, White/Green · Pair #4 Brown, White/Brown

Specifications

Impedance (ohms)	100 (+10 -5)	
Temperature Rating	-65° to +200°C	
Weight (lbs/100 ft.)	4.2	
Capacitance (pF/ft)	12.5	
Time Delay	1.24 ns/ft	
Maximum Attenuation at 80m Length	**Frequency**	**dB**
	10 MHz	5.9
	100 MHz	19.1
	250 MHz	31.1
	500 MHz	45.3
NEXT (minimum)	**Frequency**	**dB**
	1 MHz	74.3
	10 MHz	59.2
	100 MHz	52.3
	250 MHz	47.9
	500 MHz	42.2

© 2022 Glenair, Inc • 1211 Air Way, Glendale, CA 91201 • 818-247-6000 • www.glenair.com • U.S. CAGE code 06324 • SuperNine® Catalog

Dimensions in Inches (millimeters) are subject to change without notice.

ADVANCED PERFORMANCE

SuperNine® High-Speed Series

MIL-DTL-38999 Series III Type Environmental Connectors

26 AWG Category 6A Ethernet Cables 963-003 and 963-033

26 AWG S/UTP Cat 6A Cable

Glenair Part Number	963-003-26
Manufacturer Part Number	E6A3826
Manufacturer	PIC

S/UTP 26 AWG cable is small, lightweight and flexible. Twisted pairs are separated by a fluoropolymer spline for reduced crosstalk and attenuation. This 200°C rated cable is Skydrol resistant, RoHS compliant and meets FAA FAR Parts 23 and 25 Appendix F flammability requirements. Rugged, laser-markable PTFE jacket withstands abrasion and chemicals. Meets ANSI/TIA-568-C.2 Category 6A performance up to 188 feet.

Construction Details

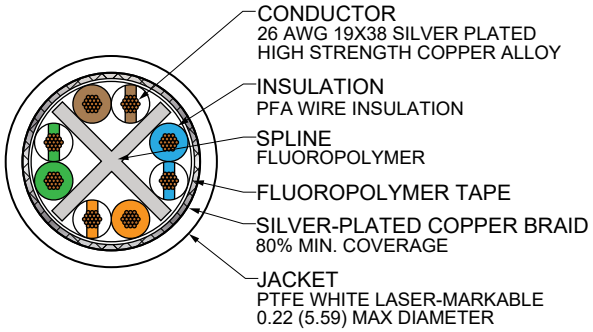

Color Code

Pair #1 Blue, White/Blue · Pair #2 Orange, White/Orange · Pair #3 Green, White/Green · Pair #4 Brown, White/Brown

Specifications

Impedance (ohms)	100 ±10	
Temperature Rating	-55° to +200°C	
Weight (lbs/100 ft.)	3.05	
Capacitance (pF/ft)	14.5	
Minimum Bend Radius (inches)	0.66	
Velocity of Propagation %	70	
Dielectric Voltage Rating (kV rms)	1.5	
DC Resistance, Max (ohms/1000 ft.)	44.8	
Max Distance in Feet (m)	188 (57)	
Attenuation Max	**Frequency**	**dB/100 ft.**
	10 MHz	3.7
	100 MHz	11.2
	250 MHz	17.4
	500 MHz	24.0

26 AWG S/FTP Cat 6A Cable

Glenair Part Number	963-033-26
Manufacturer Part Number	RCN9047-26
Manufacturer	Gore

S/FTP 26 AWG cable has an individual foil shield around each data pair for reduced crosstalk and attenuation. This high data rate Ethernet cable features a unique cable jacket material and high-density construction that significantly reduces weight and diameter. Meets ANSI/TIA 568-C.2 Category 6A requirements up to 65 meters (213 feet). ***Qualified to SAE AS6070.***

Construction Details

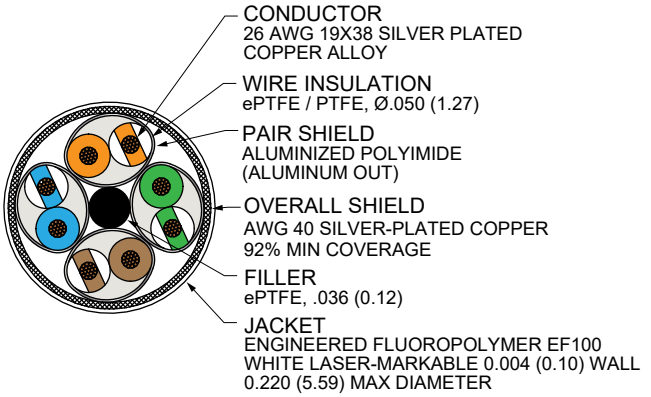

Color Code

Pair #1 Blue, White/Blue · Pair #2 Orange, White/Orange · Pair #3 Green, White/Green · Pair #4 Brown, White/Brown

Specifications

Impedance (ohms)	100 (+10 -5)	
Temperature Rating	-65° to +200°C	
Weight (lbs/100 ft.)	3.2 (.32)	
Capacitance (pF/ft)	12.5	
Time Delay	1.24 ns/ft	
Maximum Attenuation at 65m Length	**Frequency**	**dB**
	10 MHz	5.9
	100 MHz	19.1
	250 MHz	31.1
	500 MHz	45.3
NEXT (minimum)	**Frequency**	**dB**
	1 MHz	74.3
	10 MHz	59.2
	100 MHz	52.3
	250 MHz	47.9
	500 MHz	42.2

© 2022 Glenair, Inc • 1211 Air Way, Glendale, CA 91201 • 818-247-6000 • www.glenair.com • U.S. CAGE code 06324 • SuperNine® Catalog
Dimensions in Inches (millimeters) are subject to change without notice.

SuperNine® High-Speed Series

MIL-DTL-38999 Series III Type Environmental Connectors

SuperSpeed USB Cables 963-118 and 963-110

Commercial Grade SuperSpeed USB Cable

Glenair Part Number 963-118

90 ohm commercial-grade cable features PVC jacket. SuperSpeed data pairs feature low dielectric constant foamed PE insulation. Each SuperSpeed pair has an aluminized polyester shield. Overall shield is aluminum foil and aluminum wire braid.

Construction Details

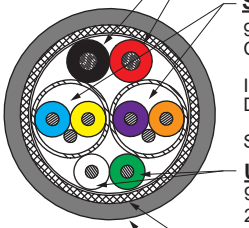

POWER PAIR
AWG 24 NICKEL-PLATED COPPER
PVC INSULATION
RED/BLACK

SUPERSPEED PAIRS
90 OHM SHIELDED TWISTED
CONDUCTORS - 28 AWG 7X36 NICKEL PLATED COPPER
INSULATION - FM-PE .041 (1.04)
DRAIN - 28 AWG 7X36 NICKEL PLATED COPPER
SHIELD - ALUMINUM FOIL

UTP SIGNAL PAIR
90 OHM UNSHIELDED TWISTED
28 AWG 7X36 NICKEL PLATED
COPPER, HDPE INSULATION

OVERALL SHIELD
SHIELD 1- ALUMINUM FOIL
SHIELD 2 -16 X 6/0.12mm ALUMINUM

JACKET
BLACK PVC
.217 (5.5) OD

Color Code

SuperSpeed pairs VIO/ORN and BLU/YEL · Power wires RED, BLK · Low speed pair WHT/GRN.

Specifications

Impedance (ohms)		
High speed pairs	90 ± 7	
Low-speed pair	90 ±15%	
Temperature Rating	0° to +80°C	
Voltage Rating	30V	
Frequency (GHz)	IL (dB/m)	NEXT (dB)
0.1	1.5	32
1.25	5.0	N/A
2.5	7.5	32
3.0	N/A	23
7.5	25	23

Aerospace Grade SuperSpeed USB Cable

Glenair Part Number 963-110

High performance, high temperature cable delivers dependable signal integrity over longer cable lengths. Fluoropolymer jacket can be laser-marked. Low-skew SuperSpeed data pairs have individual braid shields.

Construction Details

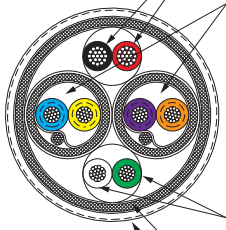

POWER PAIR
AWG 24 19/36 SILVER-PLATED COPPER
FLUOROPLASTIC INSULATION
RED/BLACK TWISTED

SUPERSPEED PAIRS
90 OHM SHIELDED TWISTED
CONDUCTORS - 26 AWG 19X38 SILVER PLATED COPPER
INSULATION - PTFE OVER ePTFE
BINDER - WHITE ePTFE
DRAIN - 28 AWG 19X40 SILVER PLATED COPPER
SHIELD - 40 AWG SILVER PLATED COPPER BRAID
JACKET - FLUOROPOLYMER, WHITE

UTP SIGNAL PAIR
90 OHM UNSHIELDED TWISTED
AWG 26 19X38 SILVER PLATED COPPER,
FLUOROPLASTIC INSULATION

OUTER SHIELD
BINDER - ePTFE UNDER AND OVER
AWG 38 SILVER-PLATED COPPER BRAID

JACKET
FLUOROPOLYMER, NATURAL OVER
FLUOROPOLYMER, WHITE
LASER-MARKABLE .228/.244 (5.8/6.2) DIA.

Color Code

SuperSpeed pairs VIO/ORN and BLU/YEL · Power wires RED, BLK · Low speed pair WHT/GRN.

Specifications

Impedance (ohms)	90 ± 5	
Temperature Rating	-65° to +200°C	
Voltage Rating	< 50 Vac	
Dielectric Withstanding Voltage	100 Vac rms	
Weight	57 g/m nominal	
Bend Radius (min.)	**Static**	**Dynamics**
	0.591 (15)	2.362 (60)
Attenuation (S0021)	**Freq. (GHz)**	**dB/m max.**
	.625	1.2
	1.25	1.7
	2.5	2.5
	5.0	3.9
	7.5	5.0

© 2022 Glenair, Inc • 1211 Air Way, Glendale, CA 91201 • 818-247-6000 • www.glenair.com • U.S. CAGE code 06324 • SuperNine® Catalog
Dimensions in Inches (millimeters) are subject to change without notice.

ADVANCED PERFORMANCE

SuperNine® High-Speed Series

MIL-DTL-38999 Series III Type Environmental Connectors

8571-0001 Pre-wired CAT 6A El Ochito® contacts, single-ended



El Ochito "White" for 10GBASE-T Ethernet *Pin contact mating face*

Save assembly time and cost with pre-wired, 100% tested El Ochito® "White" assemblies. These single-ended cables have Ochito "White" contacts terminated to Category 6A aerospace-grade shielded cable. Supplied with cable sealing boot if applicable. Compatible with Glenair Series 23 connectors. Designed to meet the requirements of MIL-DTL-38999, SAE AS39029. ***El Ochito contacts should be installed in keyed connectors before mating to prevent misalignment and contact damage.***

Contact Positions

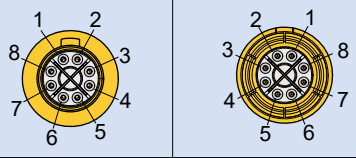

Mating face of Pin	Mating face of Socket

Technical Data

- Refer to individual contact and cable data sheets for construction details
- 100% tested for shorts, continuity and IR
- **Operating temp.**: -65 to +175°C **Impedance**: 100 ohms
- **DWV:** 500 Vrms
- **Current Rating:** 1.5 A
- **IR:** 200 megohms min.
- **Durability:** 500 mating cycles

Wiring Diagrams

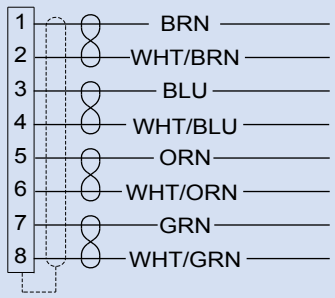

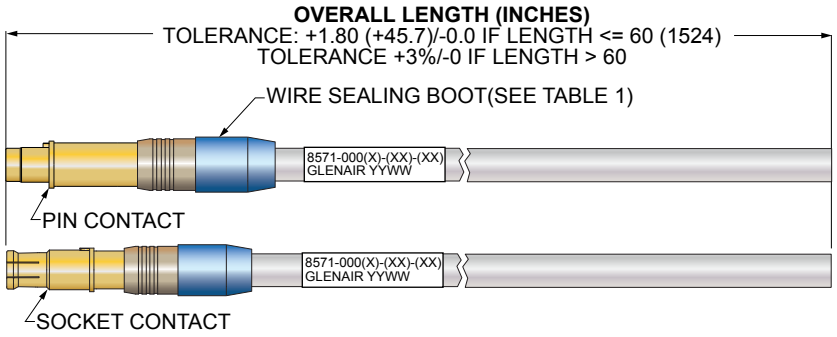

Part Number Development

Sample Part Number	**8571-0001**	**-10**	**-60**
Series / Basic Part No.	**8571-0001** = Pre-wired El Ochito® contact, single-ended CAT 6A		
Order Code	See Table 1		
Length	Length in inches (12 inch minimum)		

Table I: Order Code

Order Code	Contact Part Number	Pin/Skt	Sealing Boot	Cable Type	Cable Part Number
01	858-003-01F	Pin	Yes	S/UTP CAT6A #26 .220	963-003-26
02	858-004-01F	Skt	Yes	S/UTP CAT6A #26 .220	963-003-26
03	858-005-01	Pin	No	S/UTP CAT6A #26 .220	963-003-26
04	858-005-02	Pin	No	S/FTP CAT6A #26 .220	963-033-26
05	858-005-04	Pin	No	S/FTP CAT6A #24 .220	963-033-24
06	858-006-01	Skt	No	S/UTP CAT6A #26 .220	963-003-26
07	858-006-02	Skt	No	S/FTP CAT6A #26 .220	963-033-26
08	858-006-04	Skt	No	S/FTP CAT6A #24 .220	963-033-24
09	858-003-02F	Pin	Yes	S/FTP CAT6A #26 .220	963-033-26
10	858-004-02F	Skt	Yes	S/FTP CAT6A #26 .220	963-033-26

© 2022 Glenair, Inc • 1211 Air Way, Glendale, CA 91201 • 818-247-6000 • www.glenair.com • U.S. CAGE code 06324 • SuperNine® Catalog
Dimensions in Inches (millimeters) are subject to change without notice.

SuperNine® High-Speed Series

MIL-DTL-38999 Series III Type Environmental Connectors

8571-0002 Pre-wired CAT 6A El Ochito® contacts, pin-to-socket



El Ochito "White" for 10GBASE-T Ethernet *Pin contact mating face*

Lower installed cost. 100% tested. Save assembly time and cost with pre-wired El Ochito® "White" assemblies. These pin-to-socket cables have El Ochito "White" contacts terminated to Category 6A aerospace-grade shielded cable. Supplied with cable sealing boot if applicable. These pre-wired El Ochito contacts snap into connector body without requiring an insertion tool. Remove contacts with plastic tool 859-049. Compatible with Glenair Series 23 connectors. Designed to meet the requirements of MIL-DTL-38999, SAE AS39029. ***El Ochito contacts should be installed in keyed connectors before mating to prevent misalignment and contact damage.***

Contact Positions

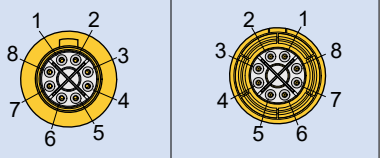

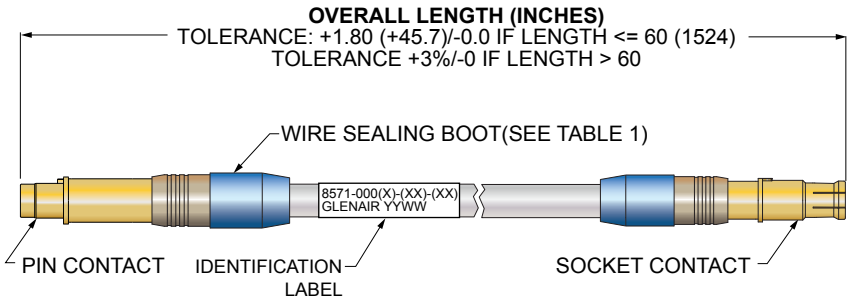

Technical Data

- Refer to individual contact and cable data sheets for construction details
- 100% tested for shorts, continuity and IR

- **Operating temp.**: -65 to +175°C
  Impedance: 100 ohms
- **DWV:** 500 Vrms
- **Current Rating**: 1.5 A
- **IR**: 200 megohms min.
- **Durability**: 500 mating cycles

Wiring Diagrams

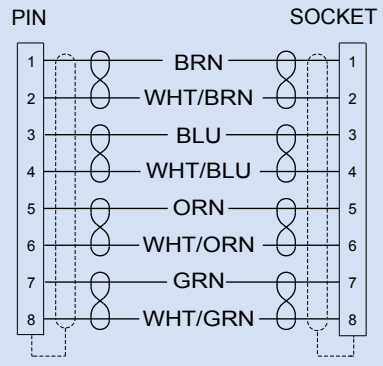

Part Number Development

Sample Part Number	**8571-0002**	**-01**	**-36**
Series / Basic Part No.	**8571-0002** = Pre-wired El Ochito® contacts, pin-to-socket		
Order Code	See Table 1		
Length	Length in inches (12 inch minimum)		

Table I: Order Code

Connector Type	Order Code	Pin Contact Part No.	Skt Contact Part No.	Sealing Boot	Cable Type	Cable Part Number
Series 23	01	858-003-01F	858-004-01F	Yes	S/UTP CAT6A #26 .220	963-003-26
	02	858-005-01	858-006-01	No	S/UTP CAT6A #26 .220	963-003-26
	03	858-005-02	858-006-02	No	S/FTP CAT6A #26 .220	963-033-26
	04	858-005-04	858-006-04	No	S/FTP CAT6A #24 .260	963-033-24
	05	858-003-02F	858-004-02F	Yes	S/FTP CAT6A #26 .220	963-033-26

© 2022 Glenair, Inc • 1211 Air Way, Glendale, CA 91201 • 818-247-6000 • www.glenair.com • U.S. CAGE code 06324 • SuperNine® Catalog
Dimensions in Inches (millimeters) are subject to change without notice.

ADVANCED PERFORMANCE

SuperNine® High-Speed Series

MIL-DTL-38999 Series III Type Environmental Connectors

8571-0003 and -0004 cable assembly, El Ochito®-to-RJ45



El Ochito "White" for 40GBASE-T Ethernet *Pin contact mating face*

El Ochito-to-RJ45. Two cable options: commercial grade (8571-0003) or flight-grade (8571-0004) Cat6A. Save assembly time and cost with pre-wired El Ochito® "White" assemblies. Cost-effective commercial grade assemblies are perfect for LAN testers and de-bugging. High performance engineered fluoropolymer aerospace grade assemblies have foil shields on each wire pair. Compatible with Glenair Series 23 connectors. Operating temperature -40 to +70°C. ***Ochito contacts should be installed in keyed connectors before mating to prevent misalignment and contact damage. Per wiring diagram below, RJ45 plug pinout adheres to EIA/TIA T568B standard.***

Contact Positions

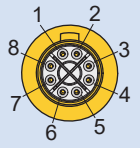

Mating face of Pin

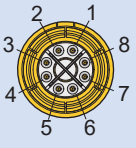

Mating face of Socket

Technical Data

- Refer to individual contact and cable data sheets for construction details
- 100% tested for shorts, continuity and IR

- **Operating temp.**: -40° to +70°C
- **Wire Size**: 26 AWG
  Impedance: 100 ohms
- **DWV:** 500 Vrms
- **Current Rating**: 1.5 A
- **IR**: 200 megohms min.
- **Durability**: 500 mating cycles

Wiring Diagrams

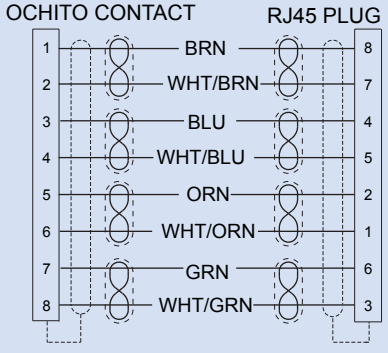

RJ45 wired per EIA/TIA T568B

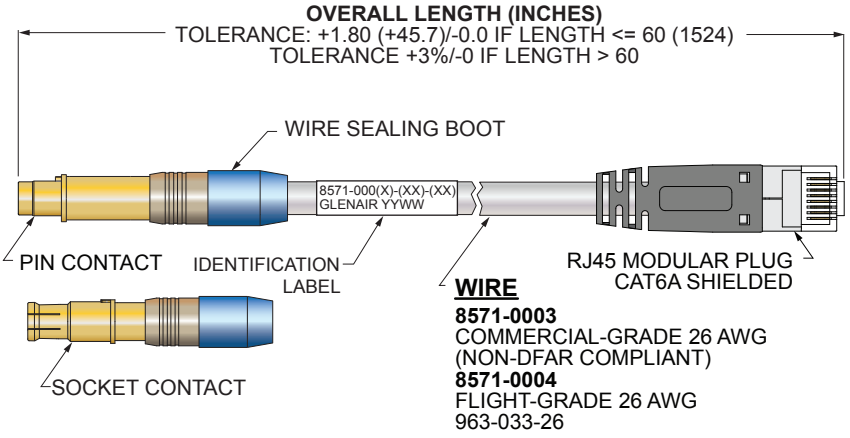

El Ochito®-to-RJ45 Cable Assemblies, Commercial-grade Wire			
Sample Part Number	**8571-0003**	**-01**	**-24**
Series / Basic Part No.	**8571-0003** = Cable Assy, El Ochito to RJ45 Plug, Commercial Grade Wire		
ELOchito Contact Part Number	**01** = 858-003-01F Pin **02** = 858-004-01F Socket		
Length	Length in inches (12 inch minimum)		

El Ochito®-to-RJ45 Cable Assemblies, Flight-grade Wire			
Sample Part Number	**8571-0004**	**-01**	**-24**
Series / Basic Part No.	**8571-0004** = Cable Assy, El Ochito to RJ45 Plug, Aerospace Grade Wire		
El Ochito Contact Part Number	**01** = 858-003-02F Pin **02** = 858-004-02F Socket		
Length	Length in inches (12 inch minimum)		

© 2022 Glenair, Inc • 1211 Air Way, Glendale, CA 91201 • 818-247-6000 • www.glenair.com • U.S. CAGE code 06324 • SuperNine® Catalog
Dimensions in Inches (millimeters) are subject to change without notice.

SuperNine® High-Speed Series

MIL-DTL-38999 Series III Type Environmental Connectors

8572-0001 Pre-wired El Ochito® USB 3.0 contacts, single-ended



Ochito "Blue" for SuperSpeed USB
Pin contact mating face

Two cable options: commercial grade or flight-grade. 100% tested. Save assembly time and cost with pre-wired El Ochito® "Blue" SuperSpeed USB assemblies. These single-ended assemblies have Ochito "Blue" contacts terminated to USB 3 shielded cables. Supplied with cable sealing boot. Commercial-grade version has PVC jacket. Aerospace-grade version has high temperature fluoropolymer construction and braided shields on SuperSpeed pairs. Compatible with Glenair Series 23 connectors. ***Ochito contacts should be installed in keyed connectors before mating to prevent misalignment and contact damage.***

Contact Positions

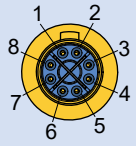

Mating face of Pin



Mating face of Socket

Technical Data

- Refer to individual contact and cable data sheets for construction details
- 100% tested for shorts, continuity and IR
- **Operating temperature**
  Aero: -65° to +125°C
  Commercial: 0 to 80°C
- **Impedance**: 90 ohms
- **DWV:** 500 Vrms
- **Current Rating**: 1.5 A
- **IR**: 200 megohms min.
- **Durability**: 500 mating cycles

Wiring Diagrams

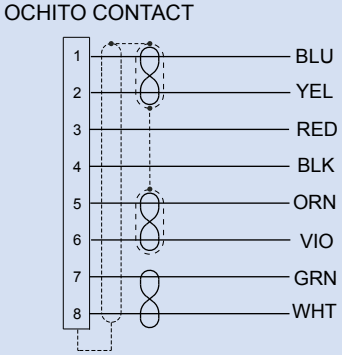

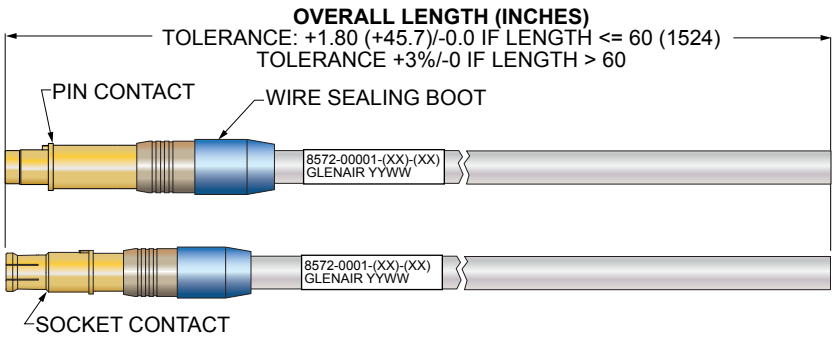

Part Number Development			
Sample Part Number	**8572-0001**	**-01**	**-36**
Series / Basic Part No.	**8572-0001** = Pre-wired El Ochito® contact, with USB 3.0 cable		
Order Code	See Table I		
Length	Length in inches (12 inch minimum)		

Table I: Order Code

Connector Type	Order Code	Pin Contact Part No.	Order Code	Skt. Contact Part No.	Cable Type	Cable Part Number
Series 23	01	858-028-01F	03	858-029-01F	Commercial-grade PVC Jacket 0° to +80°C	963-118
	02	858-028-02F	04	858-029-02F	Aerospace-grade Fluoropolymer Jacket -65° to +125°C	963-110

© 2022 Glenair, Inc • 1211 Air Way, Glendale, CA 91201 • 818-247-6000 • www.glenair.com • U.S. CAGE code 06324 • SuperNine® Catalog
Dimensions in Inches (millimeters) are subject to change without notice.

ADVANCED PERFORMANCE

SuperNine® High-Speed Series

MIL-DTL-38999 Series III Type Environmental Connectors

8572-0002 Back-to-Back El Ochito® cable assembly



Ochito "Blue" for SuperSpeed USB
Pin contact mating face

Aerospace-grade or commercial-grade cable. 100% tested. Save assembly time and cost with pre-wired El Ochito® "Blue" SuperSpeed USB assemblies. These assemblies have a pin contact on one end and a socket contact on the other end. Aerospace-grade high temperature cable has fluoropolymer construction. Commercial-grade version has PVC jacket. Compatible with Glenair Series 23 connectors. Supplied with cable sealing boot. ***Ochito contacts should be installed in keyed connectors before mating to prevent misalignment and contact damage.***

Contact Positions

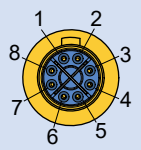

Mating face of Pin

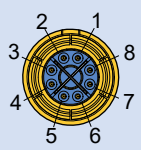

Mating face of Socket

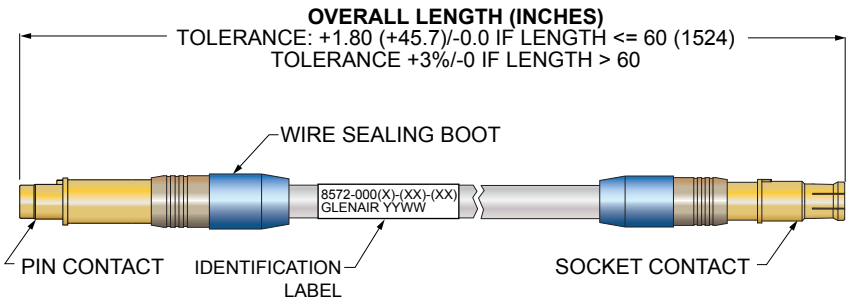

Technical Data

- Refer to individual contact and cable data sheets for construction details
- 100% tested for shorts, continuity and IR

- **Operating temperature**
  Aero: -65° to +125°C
  Commercial: 0° to 80°C
- **Wire Size**: 26 AWG
- **Impedance**: 90 ohms
- **DWV:** 500 Vrms
- **Current Rating**: 1.5 A
- **IR**: 200 megohms min.
- **Durability**: 500 mating cycles

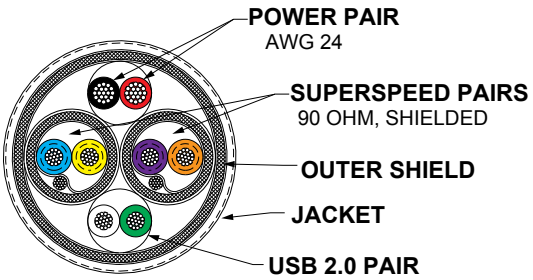

Wiring Diagrams

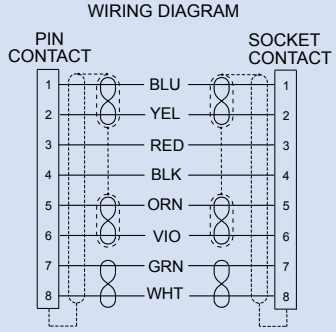

Part Number Development			
Sample Part Number	**8572-0002**	**-01**	**-36**
Series / Basic Part No.	**8572-0002** = Pre-wired El Ochito® contact, with USB 3 cable		
Order Code	See Table I		
Length	Length in inches (12 inch minimum)		

Table I: Order Code

Order Code	Pin Contact Part No	Skt Contact Part No	Cable Type	Cable Part No
01	858-028-01F	858-029-01F	Commercial-grade, PVC Jacket, -0°C to +80°C	963-118
02	858-028-02F	858-029-02F	Aerospace-grade, Fluoropolymer Jacket, -65°C to +125°C	963-110

© 2022 Glenair, Inc • 1211 Air Way, Glendale, CA 91201 • 818-247-6000 • www.glenair.com • U.S. CAGE code 06324 • SuperNine® Catalog
Dimensions in Inches (millimeters) are subject to change without notice.

ADVANCED PERFORMANCE

SuperNine® High-Speed Series

MIL-DTL-38999 Series III Type Environmental Connectors

8572-0003 El Ochito® cable assemblies with USB 3 connectors

USB 3.0 Connectors. Commercial grade. 100% tested. Save assembly time and cost with pre-wired El Ochito® "Blue" SuperSpeed USB assemblies. These assemblies have El Ochito "Blue" contacts wired to USB 3.0 connectors. Supplied with cable sealing boot. Compatible with Glenair Series 23 connectors. ***El Ochito contacts should be installed in keyed connectors before mating to prevent misalignment and contact damage.***

Part Number Development			
Sample Part Number	**8572-0003**	**-01**	**-36**
Series / Basic Part No.	**8572-0003** = Pre-wired Ochito contacts, with USB 3 connectors		
Order Code	See Table I		
Length	Length in inches (12 inch minimum)		

Table I: Order Code

Connector Type	Order Code	Contact Part No.	Pin/Skt	USB 3.0 Connector
Series 23	01	858-028-01F	Pin	A Plug
	02	858-029-01F	Socket	A Recep
	03	858-029-01F	Socket	B Plug
	04	858-029-01F	Socket	Micro-B Plug



Ochito "Blue" for SuperSpeed USB
Pin contact mating face

Contact Positions

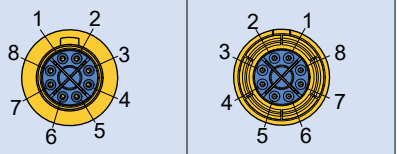

Mating face of Pin | Mating face of Socket

Technical Data

- **Operating temp.**: 0° to +80°C
- **Impedance**: 90 ohms
- **DWV:** 100 Vrms
- **Current Rating**: 1.5 A
- **IR**: 100 megohms min.
- **Durability**: 500 mating cycles

Construction

- Refer to individual contact data sheets for additional details
- 100% tested for shorts, continuity and IR
- **Cable:** commercial-grade, PVC jacket, non-DFAR compliant

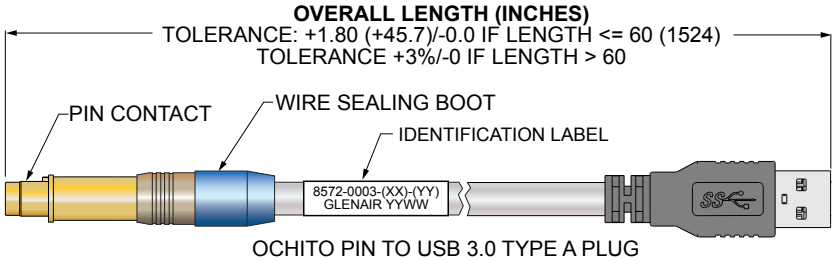

OCHITO PIN TO USB 3.0 TYPE A PLUG

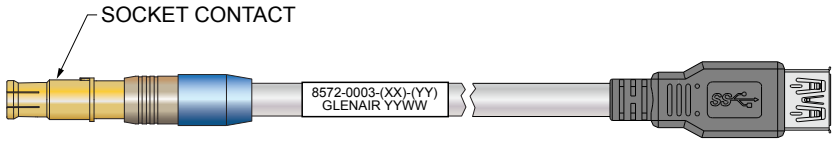

OCHITO SOCKET TO USB 3.0 TYPE A RECEPT

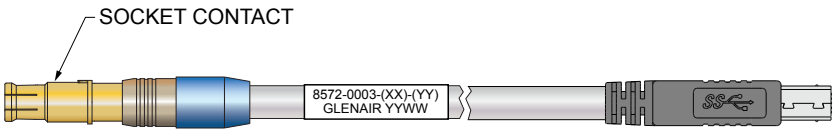

OCHITO SOCKET TO USB 3.0 TYPE B PLUG

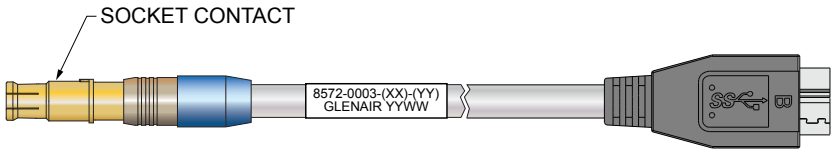

OCHITO SOCKET TO USB 3.0 TYPE MICRO-B PLUG

© 2022 Glenair, Inc • 1211 Air Way, Glendale, CA 91201 • 818-247-6000 • www.glenair.com • U.S. CAGE code 06324 • SuperNine® Catalog
Dimensions in Inches (millimeters) are subject to change without notice.

Wiring Diagram 8572-0003-01
El Ochito Pin to USB 3.0 A Plug

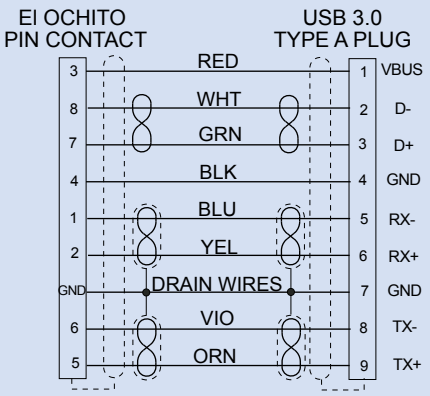

Wiring Diagram 8572-0003-02
El Ochito Socket to USB 3.0 A Recep

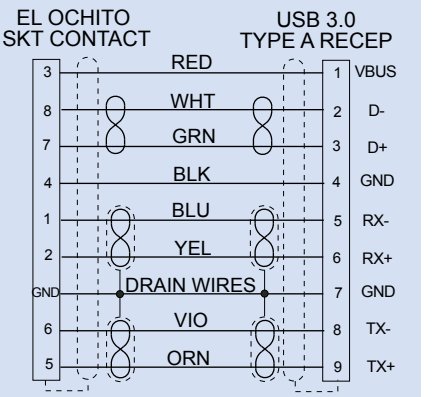

Wiring Diagram 8572-0003-03
El Ochito Socket to USB 3.0 B Plug

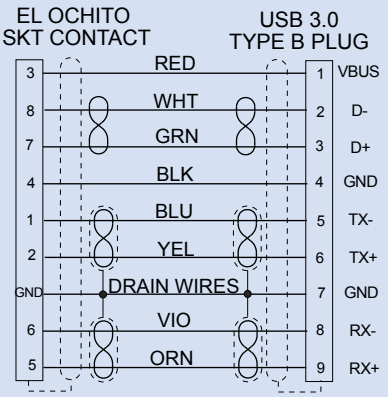

Wiring Diagram 8572-0003-04
El Ochito Skt to USB 3.0 Micro-B Plug

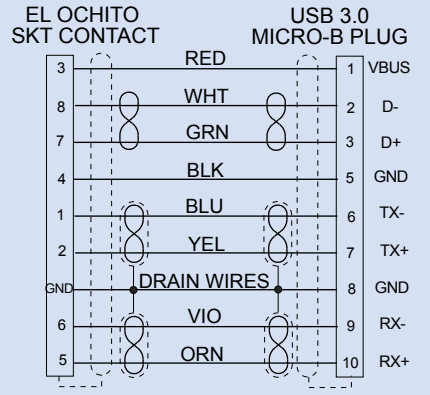

© 2022 Glenair, Inc • 1211 Air Way, Glendale, CA 91201 • 818-247-6000 • www.glenair.com • U.S. CAGE code 06324 • SuperNine® Catalog
Dimensions in Inches (millimeters) are subject to change without notice.

SuperNine® High-Speed Series

MIL-DTL-38999 Series III Type Environmental Connectors

8573-0001 Pre-wired El Ochito® contacts, single-ended



Ochito "Red" for Multi-Gigabit 100 Ohm Datalinks

Save assembly time and cost with pre-wired, 100% tested El Ochito® "Red" assemblies for multi-gigabit datalinks. These single-ended cables have Ochito "Red" contacts terminated to high performance flight-grade 100 ohm shielded twisted pair cable. Supplied with cable sealing boot. Compatible with Glenair Series 23connectors. Designed to meet the requirements of MIL-DTL-38999 and SAE AS39029. ***Ochito contacts should be installed in keyed connectors before mating to prevent misalignment and contact damage.***

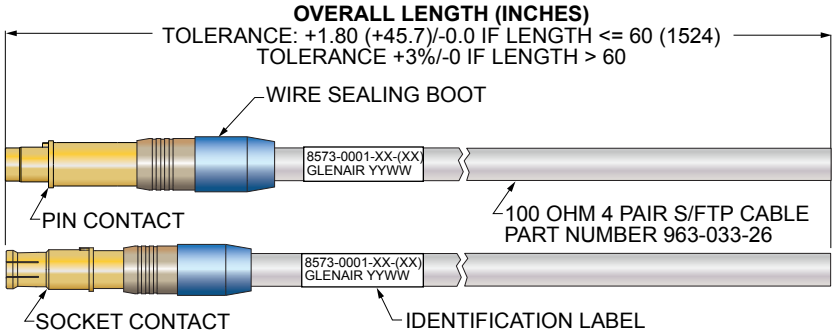

Contact Positions

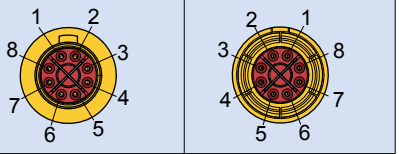

Mating face of Pin	Mating face of Socket

Technical Data

- Refer to individual contact and cable data sheets for construction details
- 100% tested for shorts, continuity and IR
- **Operating temp.**: -55° to +175°C
  Impedance: 100 ohms
- **DWV:** 500 Vrms
- **Current Rating**: 1.5 A
- **IR**: 200 megohms min.
- **Durability**: 500 mating cycles

Wiring Diagrams

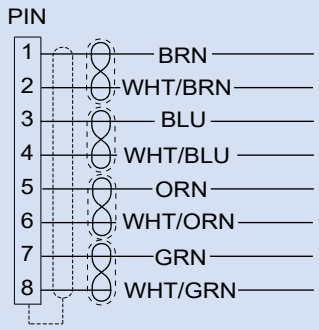

Part Number Development

Sample Part Number	8573-0001	-01	-36
Series / Basic Part No.	**8573-0001** = Pre-wired El Ochito® contact, single-ended, Multi-Gigabit		
EL Ochito Contact Part No.	See Table I		
Length	Length in inches (12 inch minimum)		

Table I: Order Code

Connector Type	Order Code	Contact Part No.	Pin/Skt	Cable
Series 23	01	858-030-02F	Pin	963-033-26 (-55° to +175°C)
	02	858-031-02F	Socket	963-033-26 (-55° to +175°C)

© 2022 Glenair, Inc • 1211 Air Way, Glendale, CA 91201 • 818-247-6000 • www.glenair.com • U.S. CAGE code 06324 • SuperNine® Catalog
Dimensions in Inches (millimeters) are subject to change without notice.

ADVANCED PERFORMANCE

SuperNine® High-Speed Series

MIL-DTL-38999 Series III Type Environmental Connectors

8573-0002 Pre-wired El Ochito® contacts, pin-socket



El Ochito "Red" for Multi-Gigabit 100 Ohm Datalinks, pin contact mating face

Save assembly time and cost with pre-wired, 100% tested El Ochito® "Red" assemblies for multi-gigabit datalinks. These pin-to-socket cables have El Ochito "Red" contacts terminated to high performance flight-grade 100 ohm shielded twisted pair cable. Supplied with cable sealing boots. Compatible with Glenair Series 23 connectors. Designed to meet the requirements of MIL-DTL-38999 and SAE AS39029. ***El Ochito contacts should be installed in keyed connectors before mating to prevent misalignment and contact damage.***

Contact Positions

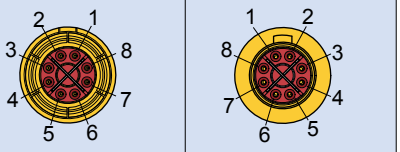

Mating face of Pin	Mating face of Socket

Technical Data

- Refer to individual contact and cable data sheets for construction details
- 100% tested for shorts, continuity and IR

- **Operating temp.**: -55° to +175°C
  Impedance: 100 ohms
- **DWV:** 500 Vrms
- **Current Rating**: 1.5 A
- **IR**: 200 megohms min.
- **Durability**: 500 mating cycles

Wiring Diagrams

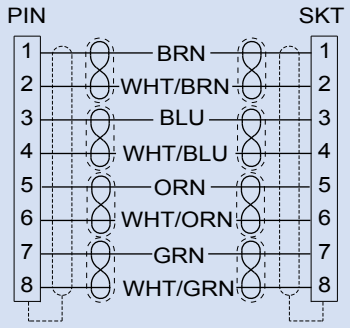

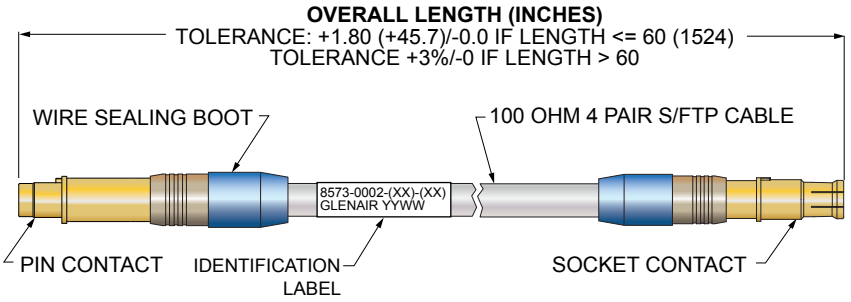

Part Number Development			
Sample Part Number	**8573-0002**	**-01**	**-48**
Series / Basic Part No.	**8573-0002** = Pre-wired El Ochito® 'Red' pin-to-socket, assemblies with 963-033-26 cable		
El Ochito Contact P/N	See Table I		
Length	Length in inches (12 inch minimum)		

Table I: Order Code

Connector Type	Order Code	Pin Contact Part No.	Skt Contact Part No.	Cable
Series 23	01	858-030-02F	858-031-02F	963-033-26 (-55° to +175°C)

© 2022 Glenair, Inc • 1211 Air Way, Glendale, CA 91201 • 818-247-6000 • www.glenair.com • U.S. CAGE code 06324 • SuperNine® Catalog
Dimensions in Inches (millimeters) are subject to change without notice.

SuperNine® High-Speed Series

MIL-DTL-38999 Series III Type Environmental Connectors

El Ochito® El Ochito® Test Adapters for SuperNine® Connectors



Plug Adapter



Receptacle Adapter

Test your system or cable while preventing damage to expensive cables with El Ochito® test adapters. These test adapters properly align test contacts without the added expense and time-consuming labor of mating connectors. Insert adapter cable into adapter, then push test adapter into Device Under Test (DUT). No tool is required to insert and remove adapter cable.

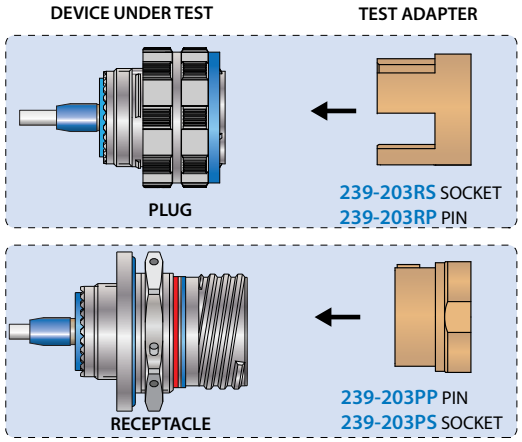

Test Adapters for SuperNine® Connectors				
Sample Part Number	**239-203**	**-P**	**S**	**19-18**
Product	**239-203** = Test adapter for SuperNine with El Ochito Contacts			
Fixture Shell Style	**P** = Plug **R** = Receptacle			
Contact Gender	**P** = Pin **S** = Socket			
Insert Arrangemnnt	**9G5**[1], **11-1**[1], **13-14**[1], **17-2**[1], **17-22**, **17-60**, **17-75**, **19-4**, **19-17**, **19-18**, **21-75**, **23-5**, **23-6**, **25-7**, **25-8**, **25-17**, **25-20**, **25-26**, **25-41**, **25-46**			

Connector Compatibility

- Glenair connectors such as 233-217, -218, -224, -225 SuperNine® connectors with size 8 data contacts

Construction

- **Receptacle adapter (239-203R):** copper alloy retention clip, rigid dielectric and universally keyed
- **Plug adapter (239-203P):** copper alloy retention clip and rigid dielectric

Notes

1. 9G5, 11-1, 14-14, and 17-2 do not have any clips installed.
2. Retention clips are only placed in size 8 cavity of arrangements with multiple size 8 cavities
3. Fixtures use SuperNine El Ochito contacts. Consult catalog for part number. See Page 10

239-203 Plug Adapter

Shell Size	ØA
09 (A)	.645 (16.38)
11 (B)	.775 (19.68)
13 (C)	.895 (22.73)
17 (E)	1.195 (30.35)
19 (F)	1.260 (32.00)
21 (G)	1.385 (35.18)
23 (H)	1.515 (38.48)
25 (J)	1.630 (41.40)

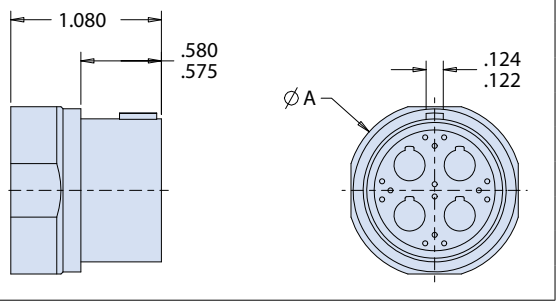

239-203 Receptacle Adapter

Shell Size	ØB
09 (A)	.546 (13.87)
11 (B)	.674 (17.12)
13 (C)	.786 (19.96)
17 (E)	1.036 (26.31)
19 (F)	1.141 (28.98)
21 (G)	1.266 (32.16)
23 (H)	1.391 (35.33)
25 (J)	1.516 (38.51)

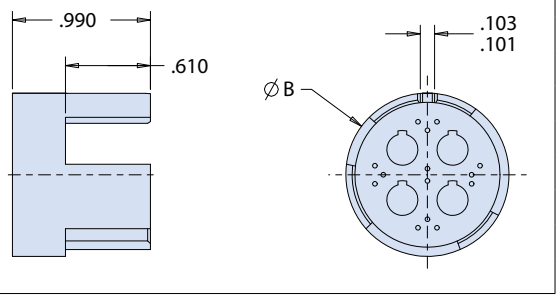

© 2022 Glenair, Inc • 1211 Air Way, Glendale, CA 91201 • 818-247-6000 • www.glenair.com • U.S. CAGE code 06324 • SuperNine® Catalog
Dimensions in Inches (millimeters) are subject to change without notice.

SuperNine® High-Speed Series

MIL-DTL-38999 Series III Type Environmental Connectors

233-217/233-224 With shielded, crimp removable contacts

Part Number Development									
Sample Part Number	**233-217**	**-G6**	**NF**	**25**	**–**	**8**	**A**	**N**	**-909XX**
Series / Basic Part No.	**233-217** with Accessory Thread **233-224** Integral Banding Porch								
Connector Style	See Table I, Connector Style								
Material/Finish	**NF** = Cadmium Olive Drab **ME** = Electroless Nickel **MT** = Nickel PTFE **ZR** = Black Zinc Nickel								
Shell Size	**9** , **11**, **13**, **17**, **19**, **21**, **23**, **25**								
Ground Option	**G** = Common Ground; See Note 11 **–** = None								
Insert Arrangement	Per MIL-STD-1560 and custom layouts; See Page C-5 and C-6								
Insert Designator	**A** = Pin insert, less contacts **B** = Socket insert, less contacts								
Alternate Polarization	**A**, **B**, **C**, **D**, **E**, **N** = Normal								
Optional Mod Code[9]	**909XX** = Supplies connector with contacts Can be added to include contacts listed in the Contact Type table. Combo layouts shall include signal contacts IAW M39029/56 & /58 **1213** = Supplies connectory with contacts per MIL-STD-1560								

Table I: Connector Style*	
Sym	**Description**
-G6	Plug, with EMI spring
-05	Receptacle, in-line
-07	Receptacle, jam-nut
-00	Receptacle, wall mount with slotted holes
-CM	Receptacle, wall mount with metric clinch nuts
-CS	Receptacle, wall mount with standard clinch nuts
-D0	Receptacle, wall mount with thru holes
-HM	Receptacle, wall mount with metric helicoils
-HS	Receptacle, wall mount with standard helicoils

***Refer to Section A for recommended panel cutout.**

NOTES

1. Insert arrangements IAW MIL-STD-1560. Contact Glenair for additional arrangement options.
2. All contacts, insertion/removal tool, and sealing plugs to be ordered separately. See section J for ordering information.
3. Dimensions in inch (millimeter) are subject to change without notice.
4. See reference information in this section for recommended mounting holes for wall mount and jam-nut receptacles.
5. Consult factory for additional information.
6. Blue color band indicates rear release retention system.
7. All contacts, insertion/removal tool, and sealing plugs to be ordered separately.
8. For contacts with boot, add F suffix.
9. See figure 2 for reference orientation of the inner pins relative to connector main key/keyway.
10. Front panel mount only
11. Ground plane option only available for insert arrangements where all contacts are shielded type

GROMMET FOLLOWER

Grommet followers provide wire sealing. Slide boot onto wire before terminating contact. After contact is installed slide boot forward into connector to seal the contact cavity.

Modification code 909xx is used to supply D38999 Series III Type connectors featuring crimp removable type contacts with high-speed contact kits. Kits include spares, tools, and sealing plugs.

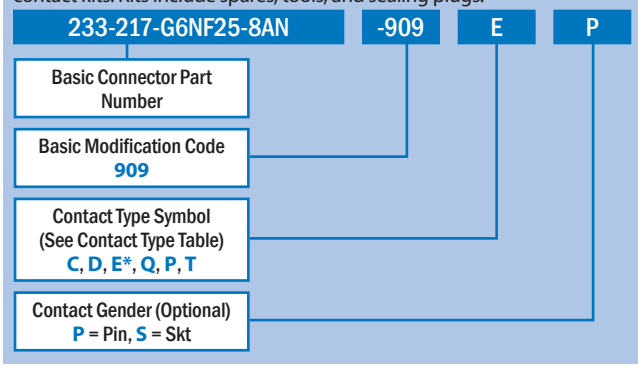

*Refer to Table III, el Ochito contact positions table for orientation.

Modification code 1213 is used to supply D38999 Series III Type connectors (233-217 and 233-224) featuring crimp removable type contacts with high-speed contact kits. Kits include spares, tools, and sealing plugs.

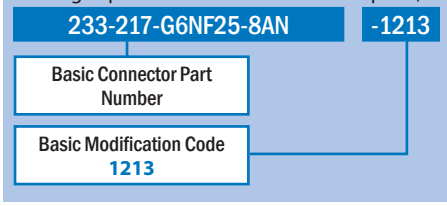

© 2022 Glenair, Inc • 1211 Air Way, Glendale, CA 91201 • 818-247-6000 • www.glenair.com • U.S. CAGE code 06324 • SuperNine® Catalog
Dimensions in Inches (millimeters) are subject to change without notice.

SuperNine® High-Speed Series

MIL-DTL-38999 Series III Type Environmental Connectors

233-217/233-224 With shielded, crimp removable contacts

Table II: Contact Type

Sym	Description	Glenair P/N	Wire Type	Grommet Follower	Application Notes
C	Size 16, contact for coax cable, per M39029/76 & /77;	Pin: 852-008-16-424 Skt: 852-009-16-428	RG174, RG316, RG179	N/A	Analog radio frequency or microwave applications
	Size 12, contact for coax cable, per M39029/102 & /103	Pin: 852-004-12-558 Skt: 852-005-12-559	RG174, RG316, RG179	N/A	
	Size 8, contact for coax cable, per M39029/59 & /60	Pin: 852-007-08-367 Skt: 852-006-08-366	M17 /95-RG180	859-042-02	
C1	Size 8, contact for 75 ohm coax cable	Pin: 852-056-01 Skt: 852-057-01	V73263, V75268, V76261	859-042-01	aerospace-grade digital video
D	Size 8, differential twinax contact for 24 AWG twinax cable	Pin: 853-014-05 Skt: 853-013-05	M17 /176-00002	859-042-01	1553 databus / differential signal
E*	Size 8, El Ochito® contact for 26 AWG	White Pin: 858-003-02 Skt: 858-004-02	963-003-26 963-033-26	687-643-8-2	1G/40G Base-T Ethernet (white)
	Size 8, El Ochito® contact for 24/26-30 AWG Cable	**Blue** **Pin: 858-028-02** **Skt: 858-029-02**	963-110 & 963-118	687-643-8-2	USB 3.0 (Blue)
	Size 8, El Ochito® contact for 26-30 AWG Cable	**Red** **Pin: 858-030-02** **Skt: 858-031-02**	963-033-26	687-643-8-2	SATA 3.0 General High Speed (red)
Q	Size 8, contact for 24 AWG Quadrax	Pin: 854-001-02 Skt: 854-002-02	963-020	859-042-02	10/100Base-T ethernet
P	Size 8, power contact for 8 AWG	Pin: 850-014 Skt: 850-013	M22759/11 or equivalent	859-042-03	Power
T	Size 8, triax/concentric twinax for twinax cable	Pin: 853-003-08-625 Skt: 853-004-08-628	M17 /176-00002	859-042-01	1553 Databus

* See Table II for Contact Positions. See Figure 2 for orientation of inner pins relative to connector main key/keyway.

ALTERNATE KEY AND KEYWAY POLARIZATION

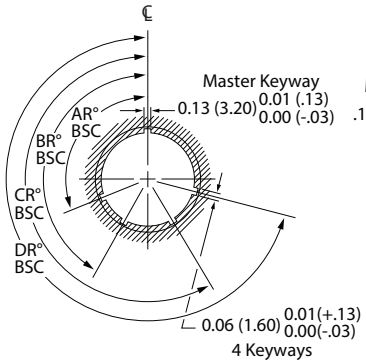

Alternate Keyway, Receptacles

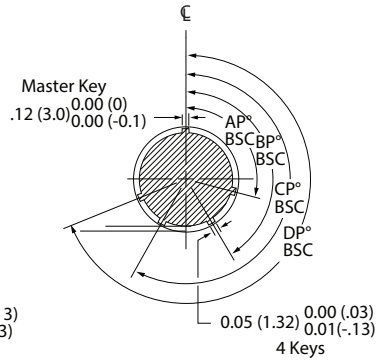

Alternate Key, Plugs

Series III Alternate Key and Keyway Polarization

Shell Size	Key and Keyway Code	AR° or AP° BSC	BR° or BP° BSC	CR° or CP° BSC	DR° or DP° BSC
9	N	105	140	215	265
	A	102	132	248	320
	B	80	118	230	312
	C	35	140	205	275
	D	64	155	234	304
	E	91	131	197	240
11 13 15	N	95	141	208	236
	A	113	156	182	292
	B	90	145	195	252
	C	53	156	220	255
	D	119	146	176	298
	E	51	141	184	242
17 19 21 23 25	N	80	142	196	293
	A	135	170	200	310
	B	49	169	200	244
	C	66	140	200	257
	D	62	145	180	280
	E	79	153	197	272

© 2022 Glenair, Inc • 1211 Air Way, Glendale, CA 91201 • 818-247-6000 • www.glenair.com • U.S. CAGE code 06324 • SuperNine® Catalog
Dimensions in Inches (millimeters) are subject to change without notice.

SuperNine® High-Speed Series

MIL-DTL-38999 Series III Type Environmental Connectors

233-217/233-224 With shielded, crimp removable contacts

El Ochito Protocols		
		
WHITE	**BLUE**	**RED**
40GBASE-T	USB 3.0	Multi Gigabit 100 ohm protocols HDMI, SATA, DisplayPort 1.4

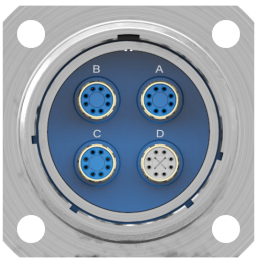

Example Code E7



Example Code E5

FIGURE 2: REFERENCE ORIENTATION OF INNER PINS RELATIVE TO CONNECTOR MAIN KEY/KEYWAY

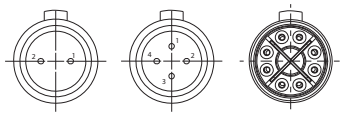

DIFERENTIAL TWINAX | QUADRAX | EL OCHITO SIZE 8

Table III: El Ochito Contact Configuration

SYM	CAVITY A	CAVITY B	CAVITY C	CAVITY D	CAVITY E	CAVITY F	CAVITY G	CAVITY H
E	W	W	W	W	W	W	W	W
E2	B	W	W	W	W	W	W	W
E3	R	W	W	W	W	W	W	W
E4	B	B	W	W	W	W	W	W
E5	R	B	W	W	W	W	W	W
E6	R	R	W	W	W	W	W	W
E7	B	B	B	W	W	W	W	W
E8	R	B	B	W	W	W	W	W
E9	R	R	B	W	W	W	W	W
E10	R	R	R	W	W	W	W	W
E11	B	B	B	B	W	W	W	W
E12	R	B	B	B	W	W	W	W
E13	R	R	B	B	W	W	W	W
E14	R	R	R	B	W	W	W	W
E15	R	R	R	R	W	W	W	W
E16	B	B	B	B	B	W	W	W
E17	R	B	B	B	B	W	W	W
E18	R	R	B	B	B	W	W	W
E19	R	R	R	B	B	W	W	W
E20	R	R	R	R	B	W	W	W
E21	R	R	R	R	R	W	W	W
E22	B	B	B	B	B	B	W	W
E23	R	B	B	B	B	B	W	W
E24	R	R	B	B	B	B	W	W
E25	R	R	R	B	B	B	W	W
E26	R	R	R	R	B	B	W	W
E27	R	R	R	R	R	B	W	W
E28	R	R	R	R	R	R	W	W
E29	B	B	B	B	B	B	B	W
E30	R	B	B	B	B	B	B	W
E31	R	R	B	B	B	B	B	W
E32	R	R	R	B	B	B	B	W
E33	R	R	R	R	B	B	B	W
E34	R	R	R	R	R	B	B	W
E35	R	R	R	R	R	R	B	W
E36	R	R	R	R	R	R	R	W
E37	B	B	B	B	B	B	B	B
E38	R	B	B	B	B	B	B	B
E39	R	R	B	B	B	B	B	B
E40	R	R	R	B	B	B	B	B
E41	R	R	R	R	B	B	B	B
E42	R	R	R	R	R	B	B	B
E43	R	R	R	R	R	R	B	B
E44	R	R	R	R	R	R	R	B
E45	R	R	R	R	R	R	R	R

© 2022 Glenair, Inc • 1211 Air Way, Glendale, CA 91201 • 818-247-6000 • www.glenair.com • U.S. CAGE code 06324 • SuperNine® Catalog
Dimensions in Inches (millimeters) are subject to change without notice.

SuperNine® High-Speed Series

MIL-DTL-38999 Series III Type Environmental Connectors

233-217/233-224 With shielded, crimp removable contacts

G6 - PLUG

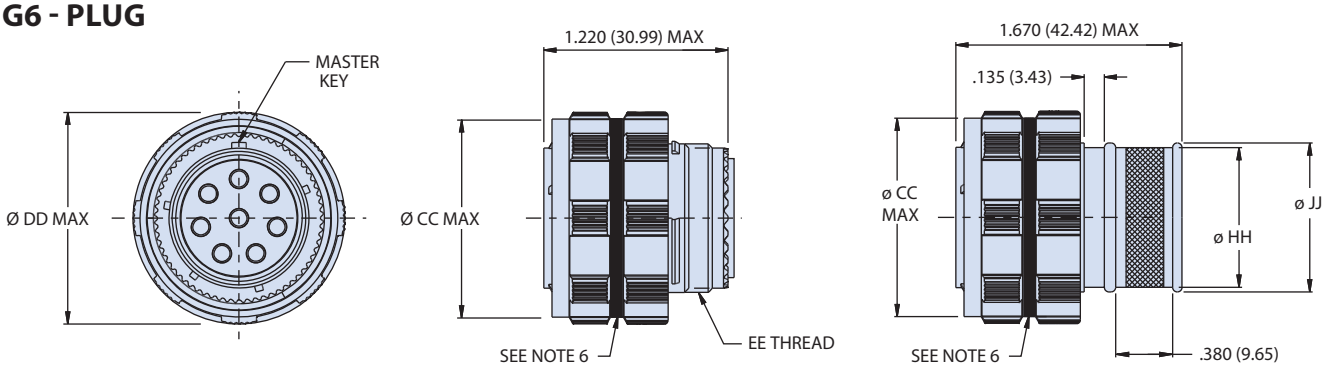

233-217-G6 - PLUG WITH ACCESSORY THREAD

233-224-G6 - PLUG WITH BANDING PORCH

05 - IN-LINE RECEPTACLE

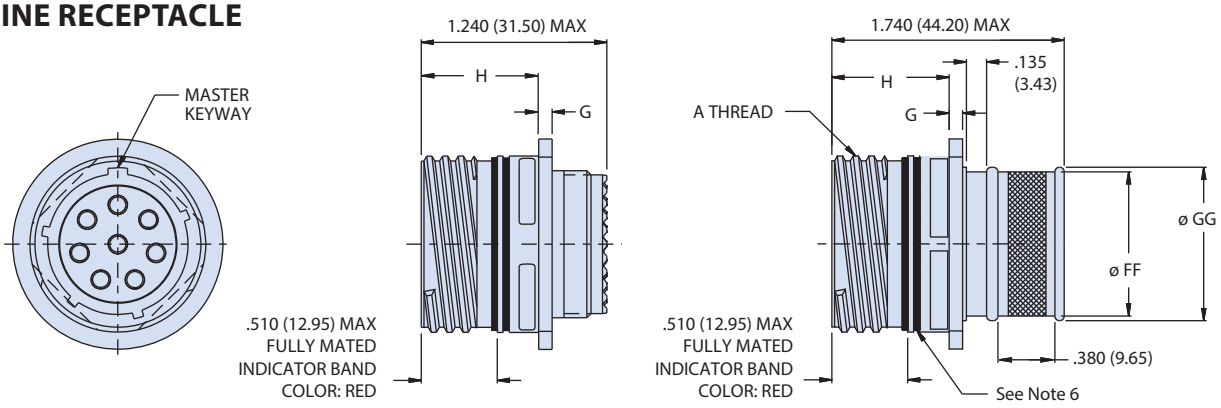

233-217-05 - INLINE RECEPTACLE ACCESSORY THREAD

233-224-05 - INLINE RECEPTACLE BANDING PORCH

07 - JAM-NUT RECEPTACLE

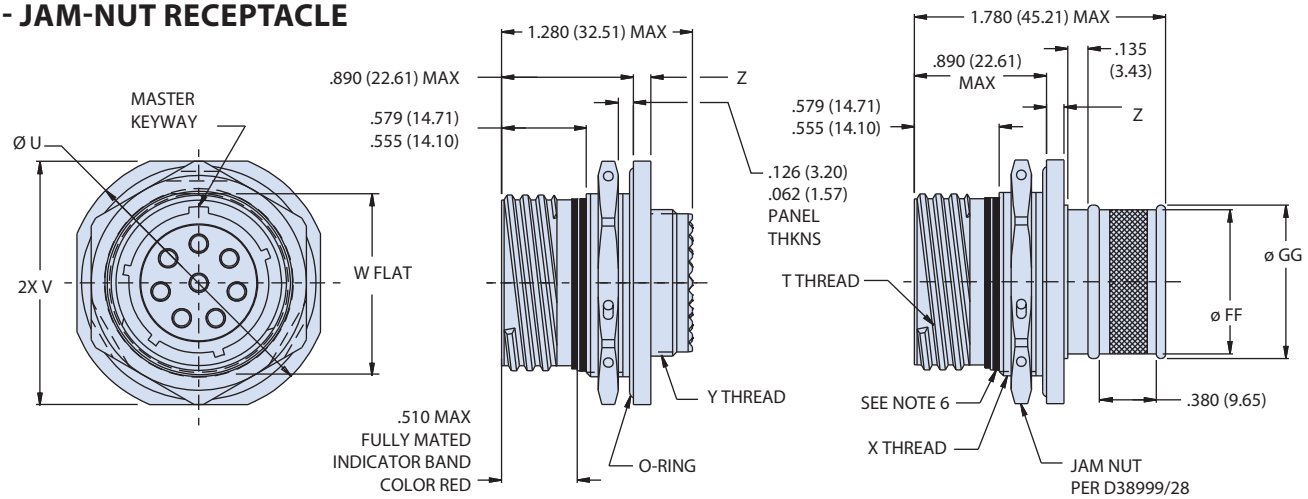

233-217-07 - JAM NUT WITH ACCESSORY THREAD

233-224-07 - JAM NUT WITH BANDING PORCH

© 2022 Glenair, Inc • 1211 Air Way, Glendale, CA 91201 • 818-247-6000 • www.glenair.com • U.S. CAGE code 06324 • SuperNine® Catalog
Dimensions in Inches (millimeters) are subject to change without notice.

00, CM, CS, DO, HM AND HS WALL MOUNT RECEPTACLES WITH ACCESSORY THREAD OR INTEGRAL BANDING PORCH

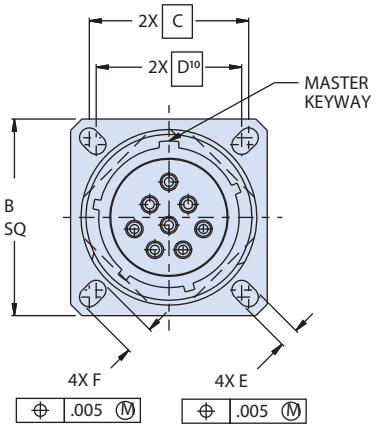

00 - WALL MOUNT RECEPTACLE WITH SLOTTED HOLES

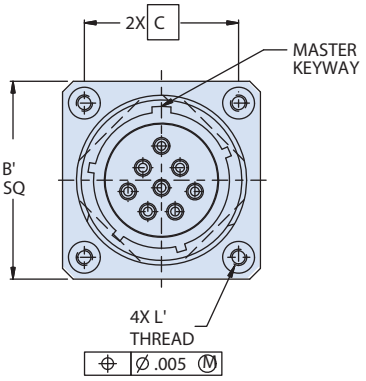

CM - WALL MOUNT RECEPTACLE WITH METRIC CLINCH NUTS

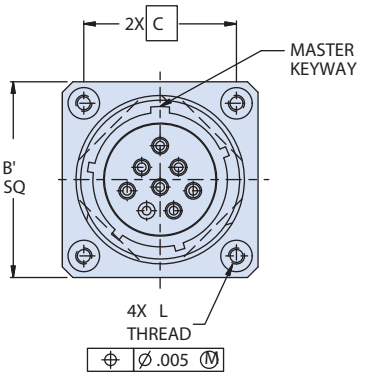

CS - WALL MOUNT RECEPTACLE WITH STANDARD CLINCH NUTS

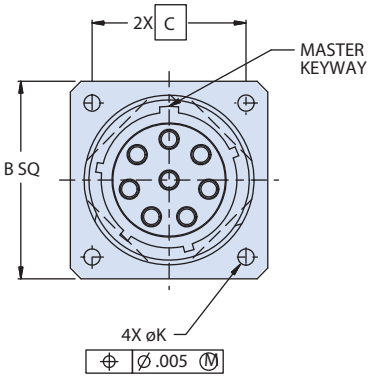

DO - WALL MOUNT RECEPTACLE WITH THRU HOLES

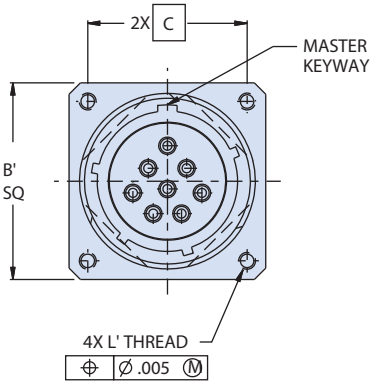

HM - WALL MOUNT RECEPTACLE WITH METRIC HELICOILS

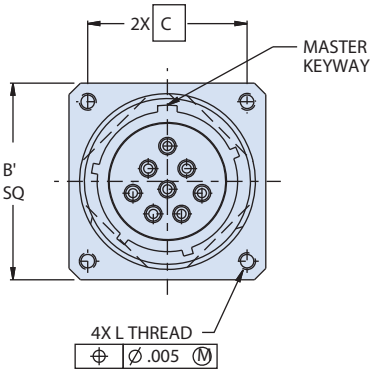

HS - WALL MOUNT RECEPTACLE WITH STANDARD HELICOIL

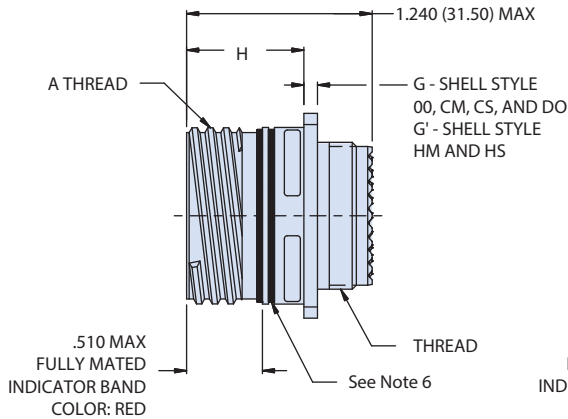

233-217 WALL MOUNT WITH ACCESSORY THREAD

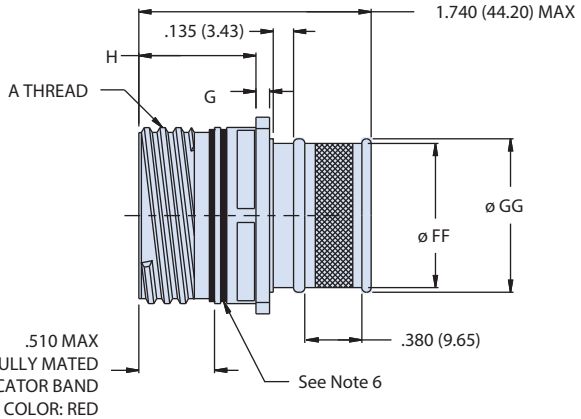

233-224 WALL MOUNT WITH INTEGRAL BANDING PORCH

© 2022 Glenair, Inc • 1211 Air Way, Glendale, CA 91201 • 818-247-6000 • www.glenair.com • U.S. CAGE code 06324 • SuperNine® Catalog
Dimensions in Inches (millimeters) are subject to change without notice.

SuperNine® High-Speed Series

MIL-DTL-38999 Series III Type Environmental Connectors

233-217/233-224 With shielded, crimp removable contacts

Plug Dimension

Shell Size Code	Shell Size	Ø CC Max	Ø DD Max	EE Thd
A	9	.811 (20.60)	.858 (21.79)	M12 X 1.0-6g 0.100R
B	11	.929 (23.60)	.984 (24.99)	M15 X 1.0-6g 0.100R
C	13	1.008 (25.60)	1.157 (29.39)	M18 X 1.0-6g 0.100R
E	17	1.358 (34.49)	1.406 (35.71)	M25 X 1.0-6g 0.100R
F	19	1.469 (37.31)	1.516 (38.51)	M28 X 1.0-6g 0.100R
G	21	1.594 (40.49)	1.642 (41.71)	M31 X 1.0-6g 0.100R
H	23	1.720 (43.69)	1.768 (44.91)	M34 X 1.0-6g 0.100R
J	25	1.843 (46.81)	1.890 (48.01)	M37 X 1.0-6g 0.100R

Jam-nut Dimensions

Shell Size Code	Shell Size	T Thd .1P-.3L-TS-2A	ØU	V	W Flat	X Thd (1.0-6g 0.100R)	Y Thd (1.0-6g 0.100R)	Z
A	9	.6250	1.200 (30.48) 1.178 (29.92)	1.078 (27.38) 1.048 (26.62)	.654 (16.61) .645 (16.38)	M17 X	M12 X	.122 (3.10) .083 (2.11)
B	11	.7500	1.386 (35.20) 1.362 (34.59)	1.268 (32.21) 1.236 (31.39)	0.755 (19.18) 0.745 (18.92)	M20 X	M15 X	
C	13	.8750	1.512 (38.40) 1.488 (37.80)	1.390 (35.31) 1.358 (34.49)	.942 (23.93) .932 (23.67)	M25 X	M18 X	
E	17	1.1875	1.764 (44.81) 1.740 (44.20)	1.642 (41.71) 1.610 (40.89)	1.191 (30.25) 1.181 (30.00)	M32 X	M25 X	
F	19	1.2500	1.949 (49.50) 1.925 (48.90)	1.827 (46.41) 1.795 (45.59)	1.316 (33.43) 1.306 (33.17)	M35 X	M28 X	.153 (3.89) .114 (2.90)
G	21	1.3750	2.075 (52.71) 2.051 (52.10)	1.953 (49.61) 1.921 (48.79)	1.441 (36.60) 1.431 (36.35)	M38 X	M31 X	
H	23	1.5000	2.201 (55.91) 2.177 (55.30)	2.079 (52.81) 2.047 (51.99)	1.566 (39.78) 1.556 (39.52)	M41 X	M34 X	
J	25	1.6250	2.323 (59.00) 2.299 (58.39)	2.205 (56.01) 2.173 (55.19)	1.691 (42.95) 1.681 (42.70)	M44 X	M37 X	

Wall Mount Dimensions

Shell Size Code	Shell Size	A Thd -.1P-.3L-TS-2A	B Sq	B' Sq	C Bsc	D Bsc[7]	E	F	G	G'	H	J Thd 1.0-6g 0.100R	ØK	L Thd	L' Thd	ØM
A	9	.6250	.949 (24.10) .925 (23.50)	1.094 (27.79) 1.054 (26.77)	.719 (18.26)	.594 (15.09)	.136 (3.45) .120 (3.05)	.224 (5.69) .208 (5.28)	.098 (2.49) .083 (2.11)	.179 (4.55) .140 (3.56)	.820 (20.83) .771 (19.58)	M12	.136 (3.45) .120 (3.05)	.112-40 UNC	M3X0.5	.858 (21.79)
B	11	.7500	1.043 (26.49) 1.019 (25.88)	1.187 (30.15) 1.147 (29.13)	.812 (20.62)	.719 (18.26)		.202 (5.13) .186 (4.72)				M15				.984 (24.99)
C	13	.8750	1.138 (28.91) 1.114 (28.30)	1.226 (31.14) 1.186 (30.12)	.906 (23.01)	.812 (20.62)						M18				1.157 (29.39)
E	17	1.1875	1.323 (33.60) 1.299 (32.99)	1.437 (36.50) 1.397 (35.48)	1.062 (26.97)	.969 (24.61)						M25				1.406 (35.71)
F	19	1.2500	1.449 (36.80) 1.425 (36.20)	1.531 (38.89) 1.491 (37.87)	1.156 (29.36)	1.062 (26.97)						M28				1.516 (38.51)
G	21	1.3750	1.575 (40.00) 1.551 (39.40)	1.625 (41.28) 1.585 (40.26)	1.250 (31.75)	1.156 (29.36)			.126 (3.20) .083 (2.11)			M31				1.642 (41.71)
H	23	1.5000	1.701 (43.21) 1.677 (42.60)	1.750 (44.45) 1.710 (43.43)	1.375 (34.92)	1.250 (31.75)	.162 (4.11) .146 (3.71)	.250 (6.35) .234 (5.94)		.190 (4.83) .170 (4.32)	.790 (20.07) .741 (18.82)	M34	.162 (4.11) .146 (3.71)	.138-32 UNC	M4X0.7	1.768 (44.91)
J	25	1.6250	1.823 (46.30) 1.799 (45.69)	1.875 (47.63) 1.835 (46.61)	1.500 (38.10)	1.375 (34.92)						M37				1.890 (48.01)

Integral Banding Porch Dimensions

Shell Size Code	Shell Size	Ø FF	Ø GG	Ø HH	Ø JJ
A	09	.475 (12.07)	.538 (13.67)	.420 (10.67)	.465 (11.81)
B	11	.600 (15.24)	.662 (16.81)	.550 (13.97)	.595 (15.11)
C	13	.700 (17.78)	.762 (19.35)	.670 (17.02)	.715 (18.16)
D	15	.835 (21.21)	.898 (22.81)	.815 (20.70)	.860 (21.84)
E	17	.960 (24.38)	1.022 (25.96)	.945 (24.00)	.990 (25.15)
F	19	1.062 (26.97)	1.125 (28.58)	1.050 (26.67)	1.100 (27.94)
G	21	1.188 (30.18)	1.250 (31.75)	1.170 (29.72)	1.220 (30.99)
H	23	1.275 (32.39)	1.338 (33.99)	1.290 (32.77)	1.340 (34.04)
J	25	1.475 (37.47)	1.538 (39.07)	1.400 (35.56)	1.450 (36.83)

© 2022 Glenair, Inc • 1211 Air Way, Glendale, CA 91201 • 818-247-6000 • www.glenair.com • U.S. CAGE code 06324 • SuperNine® Catalog
Dimensions in Inches (millimeters) are subject to change without notice.

ADVANCED PERFORMANCE

SuperNine® High-Speed Series

MIL-DTL-38999 Series III Type Environmental Connectors

233-260 QDC Plug with shielded crimp removable contacts

Part Number Development										
Sample Part Number	**233-260**	**–G6**	**ME**	**25**	**–**	**8**	**E**	**A**	**N**	**–909CP**
Series / Basic Part No.	**233-260** High-Speed Quick Disconnect									
Connector Style	**-G6** = Quick Disconnect Plug									
Material/Finish	**NF** = Aluminum/Cad. Olive Drab **MT** = Aluminum/Nickel PTFE **ME** = Aluminum/ Electroless Nickel **Z1** = SST, Passivated									
Shell Size	**9**, **11**, **13**, **17**, **19**, **21**, **23**, **25**									
Ground Option	**G** = Common Ground **–** = None; See Note 8									
Insert Arrangement	Per MIL-STD-1560, See page C-5 and C-6									
Lanyard Length	See Table I for Lanyard Length									
Contact Style	**A** = Pin Less Contact **B** = Socket Less Contact									
Alternate Polarization*	**A**, **B**, **C**, **D**, **E**, **N** = Normal (IAW MIL-DTL-38999 Series III)									
Optional Mod Code	**909**** = Supplies connector with contacts; See modification code example below for details.									

***Refer to Section A for complete details**

Modification code 909xx is used to supply D38999 Series III Type connectors featuring crimp removable type contacts with high-speed contact kits. Kits include spares, tools, and sealing plugs. See example below.

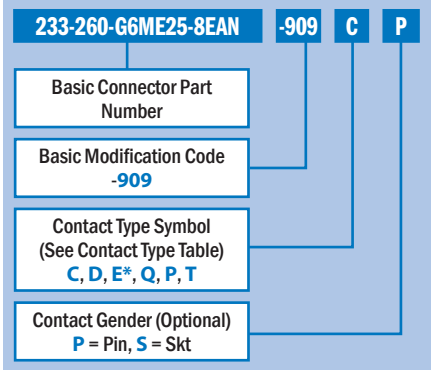

*For El Ochito see Table II, Contact Configuration Table on following page for appropriate code and dash number symbol.

Contact Type					
Sym	**Description**	**Glenair P/N**	**Wire Type**	**Grommet Follower**	**Application Notes**
C	Size 16, contact for coax cable, per M39029/76 & /77;	Pin: 852-008-16-424 Skt: 852-009-16-428	RG174, RG316, RG179	N/A	Analog radio frequency or microwave applications
	Size 12, contact for coax cable, per M39029/102 & /103	Pin: 852-004-12-558 Skt: 852-005-12-559	RG174, RG316, RG179	N/A	
	Size 8, contact for coax cable, per M39029/59 & /60	Pin: 852-007-08-367 Skt: 852-006-08-366	M17 /95-RG180	859-042-02	
C1	Size 8, contact for 75 ohm coax cable	Pin: 852-056-01 Skt: 852-057-01	V73263, V75268, V76261	859-042-01	Aerospace-grade digital video
D	Size 8, differential twinax contact for 24 AWG twinax cable	Pin: 853-014-05 Skt: 853-013-05	M17 /176-00002	859-042-01	1553 databus / differential signal
E*	Size 8, El Ochito® contact for 26 AWG	White Pin: 858-003-02 Skt: 858-004-02	963-003-26 963-033-26	687-643-8-2	1G/40G Base-T Ethernet (white)
	Size 8, El Ochito® contact for 24/26-30 AWG Cable	**Blue** **Pin: 858-028-02** **Skt: 858-029-02**	963-110 & 963-118	687-643-8-2	USB 3.0 (Blue)
	Size 8, El Ochito® contact for 26-30 AWG Cable	**Red** **Pin: 858-030-02** **Skt: 858-031-02**	963-033-26	687-643-8-2	SATA 3.0 General High Speed (red)
Q	Size 8, contact for 24 AWG Quadrax	Pin: 854-001-02 Skt: 854-002-02	963-020	859-042-02	10/100Base-T ethernet
P	Size 8, power contact for 8 AWG	Pin: 850-014 Skt: 850-013	M22759/11 or equivalent	859-042-03	Power
T	Size 8, triax/ concentric twinax for twinax cable	Pin: 853-003-08-625 Skt: 853-004-08-628	M17 /176-00002	859-042-01	1553 Databus

* See Table II for Contact Positions. See Figure 2 for orientation of inner pins relative to connector main key/keyway.

© 2022 Glenair, Inc • 1211 Air Way, Glendale, CA 91201 • 818-247-6000 • www.glenair.com • U.S. CAGE code 06324 • SuperNine® Catalog
Dimensions in Inches (millimeters) are subject to change without notice.

SuperNine® High-Speed Series

MIL-DTL-38999 Series III Type Environmental Connectors

233-260 QDC Plug with shielded crimp removable contacts

El Ochito Protocols		
		
WHITE	**BLUE**	**RED**
40GBASE-T	USB 3.0	Multi Gigabit 100 ohm protocols HDMI, SATA, DisplayPort 1.4

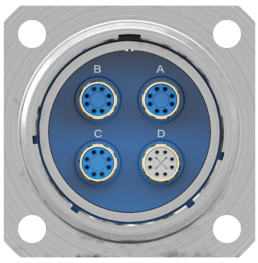

Example Code E7



Example Code E5

FIGURE 2: REFERENCE ORIENTATION OF INNER PINS RELATIVE TO CONNECTOR MAIN KEY/KEYWAY

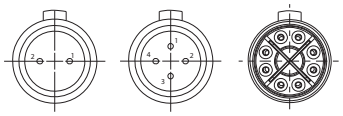

Table I: Lanyard Length					
Sym	L ±.236 (±6)	Sym	L ±.236 (±6)	Sym	L ±.236 (±6)
A	4.016 (102.01)	I	7.992 (203.00)	S	12.007 (304.98)
B	4.527 (114.99)	J	8.503 (215.98)	T	12.519 (317.98)
C	5.000 (127.00)	K	9.015 (228.98)	U	13.031 (330.99)
D	5.511 (139.98)	L	9.527 (241.99)	V	14.015 (355.98)
E	6.024 (153.01)	M	10.000 (254.00)	W	15.000 (381.00)
F	6.535 (165.99)	N	10.511 (266.98)	X	16.023 (406.98)
G	7.007 (177.98)	P	11.023 (279.98)	Y	17.007 (431.98)
H	7.519 (190.98)	R	11.535 (292.99)	Z	18.031 (457.99)

El Ochito Contact Configuration								
SYM	CAVITY A	CAVITY B	CAVITY C	CAVITY D	CAVITY E	CAVITY F	CAVITY G	CAVITY H
E	W	W	W	W	W	W	W	W
E2	B	W	W	W	W	W	W	W
E3	R	W	W	W	W	W	W	W
E4	B	B	W	W	W	W	W	W
E5	R	B	W	W	W	W	W	W
E6	R	R	W	W	W	W	W	W
E7	B	B	B	W	W	W	W	W
E8	R	B	B	W	W	W	W	W
E9	R	R	B	W	W	W	W	W
E10	R	R	R	W	W	W	W	W
E11	B	B	B	B	W	W	W	W
E12	R	B	B	B	W	W	W	W
E13	R	R	B	B	W	W	W	W
E14	R	R	R	B	W	W	W	W
E15	R	R	R	R	W	W	W	W
E16	B	B	B	B	B	W	W	W
E17	R	B	B	B	B	W	W	W
E18	R	R	B	B	B	W	W	W
E19	R	R	R	B	B	W	W	W
E20	R	R	R	R	B	W	W	W
E21	R	R	R	R	R	W	W	W
E22	B	B	B	B	B	B	W	W
E23	R	B	B	B	B	B	W	W
E24	R	R	B	B	B	B	W	W
E25	R	R	R	B	B	B	W	W
E26	R	R	R	R	B	B	W	W
E27	R	R	R	R	R	B	W	W
E28	R	R	R	R	R	R	W	W
E29	B	B	B	B	B	B	B	W
E30	R	B	B	B	B	B	B	W
E31	R	R	B	B	B	B	B	W
E32	R	R	R	B	B	B	B	W
E33	R	R	R	R	B	B	B	W
E34	R	R	R	R	R	B	B	W
E35	R	R	R	R	R	R	B	W
E36	R	R	R	R	R	R	R	W
E37	B	B	B	B	B	B	B	B
E38	R	B	B	B	B	B	B	B
E39	R	R	B	B	B	B	B	B
E40	R	R	R	B	B	B	B	B
E41	R	R	R	R	B	B	B	B
E42	R	R	R	R	R	B	B	B
E43	R	R	R	R	R	R	B	B
E44	R	R	R	R	R	R	R	B
E45	R	R	R	R	R	R	R	R

© 2022 Glenair, Inc • 1211 Air Way, Glendale, CA 91201 • 818-247-6000 • www.glenair.com • U.S. CAGE code 06324 • SuperNine® Catalog
Dimensions in Inches (millimeters) are subject to change without notice.

SuperNine® High-Speed Series

MIL-DTL-38999 Series III Type Environmental Connectors

233-260 QDC Plug with shielded crimp removable contacts

Separation Forces Max		
Shell Size	Straight Pull Pound (Newton)	15 Degree Pull Pound (Newton)
09	44.96 (200)	55.08 (245)
11	44.96 (200)	55.08 (245)
17	89.92 (400)	100.04 (445)
19	89.92 (400)	100.04 (445)
21	89.92 (400)	100.04 (445)
23	89.92 (400)	100.04 (445)
25	89.92 (400)	100.04 (445)

Dimensions				
Shell Size	Shell Size Code	A Max	B Min	VV Thread 1-6g-.Ø1ØØR
09	A	1.720 (43.69)	.977 (24.82)	M12 x1-6g-0.100R
11	B	1.746 (44.35)	1.003 (25.48)	M15 x1-6g-0.100R
17	C	2.204 (55.98)	1.425 (36.20)	M25 x1-6g-0.100R
19	D	2.230 (56.64)	1.535 (38.99)	M28 x1-6g-0.100R
21	E	2.472 (62.79)	1.661 (42.19)	M31 x1-6g-0.100R
23	F	2.374 (60.30)	1.787 (45.39)	M34 x1-6g-0.100R
25	G	2.494 (63.35)	1.909 (48.49)	M37 x1-6g-0.100R

NOTES

1. Material/Finish
   - Shell, coupling sleeve, lanyard ring inner sleeve, lockring: aluminum alloy or CRES/see part number development
   - Contacts: copper alloy / gold plated
   - Insulators: high grade rigid dielectric/ N.A.
   - Seals: fluorosilicone blend / N.A.
2. Connector is designed to mate with Glenair part number 233-217 and 233-224 with same size, same arrangement, and polarization.
3. Blue color band indicates rear release retention system
4. For backshell extender consult factory.
5. Dimension B is clearance to accommodate MIL-C-85049 accessories.
6. All contacts, insertion/ removal tool, and sealing plug to be ordered separately
7. Connector 233-260 is commercial equivalent of D38999/29, /30 and /31 type 2
8. Ground plane option only available for insert arrangements where all contacts are shielded type.
9. Modification code 909 can be added to the end of part number to include contacts. See contact reference guide table.
   All remaining combo contact arrangements for size #22, 20, 16 and 12 are to be power.

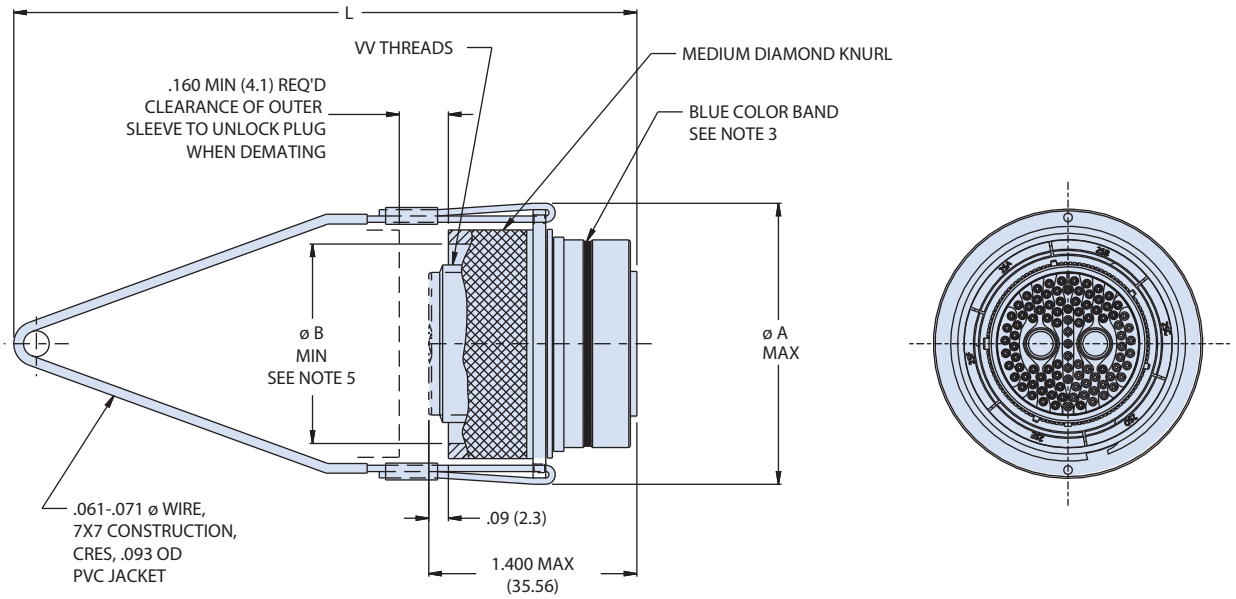

© 2022 Glenair, Inc • 1211 Air Way, Glendale, CA 91201 • 818-247-6000 • www.glenair.com • U.S. CAGE code 06324 • SuperNine® Catalog
Dimensions in Inches (millimeters) are subject to change without notice.

SuperNine® High-Speed Series

MIL-DTL-38999 Series III Type Environmental Connectors

233-226 QDC Plug with shielded crimp removable contacts

Part Number Development												
Sample Part Number	**233-226**	**B**	**–G6**	**ME**	**25**	**–**	**8**	**B**	**A**	**E**	**–4**	**–909CP**
Series / Basic Part No.	**233-226** High-Speed, Quick Disconnect Plug											
Rear Accessory Options	**–** = Accessory Thread and Teeth **B** = Integrated Backshell, Boot Adapter **S** = Integrated Backshell Single Band											
Connector Style	**-G6** = Plug, EMI											
Material/Finish	**NF** = Aluminum/Cad. Olive Drab **MT** = Aluminum/Nickel PTFE **ME** = Aluminum/ Electroless Nickel **Z1** = SST, Passivated											
Shell Size	**9**, **11**, **13**, **17**, **19**, **21**, **23**, **25**											
Ground Option	**G** = Common Ground **–** = None; See Note 8											
Insert Arrangement	Per MIL-STD-1560, See page C-5 and C-6											
Contact Style	**A** = Pin Insert, Less Contacts **B** = Socket Insert, Less Contacts											
Alternate Polarization*	**A**, **B**, **C**, **D**, **E**, **N** = Normal (IAW MIL-DTL-38999 Series III)											
Lanyard Length	See Table I, Lanyard Length											
Connector Type	**1** = Type 1 **4** = Type 4 **6** = Type 6											
Optional Mod Code	**909**** = Supplies connector with contacts; See modification code example for details.											

***Refer to Section A for complete details**

Modification code 909xx is used to supply D38999 Series III Type connectors featuring crimp removable type contacts with high-speed contact kits. Kits include spares, tools, and sealing plugs. See example below.

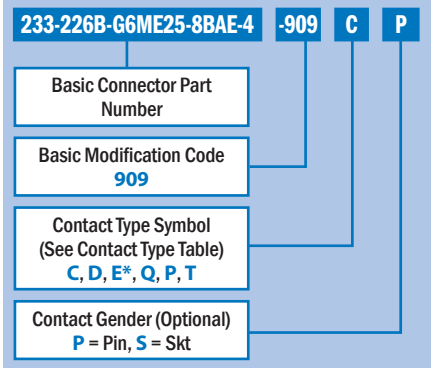

*For El Ochito see Table II, Contact Configuration Table on following page for appropriate code and dash number symbol.

Contact Type					
Sym	**Description**	**Glenair P/N**	**Wire Type**	**Grommet Follower**	**Application Notes**
C	Size 16, contact for coax cable, per M39029/76 & /77;	Pin: 852-008-16-424 Skt: 852-009-16-428	RG174, RG316, RG179	N/A	Analog radio frequency or microwave applications
	Size 12, contact for coax cable, per M39029/102 & /103	Pin: 852-004-12-558 Skt: 852-005-12-559	RG174, RG316, RG179	N/A	
	Size 8, contact for coax cable, per M39029/59 & /60	Pin: 852-007-08-367 Skt: 852-006-08-366	M17 /95-RG180	859-042-02	
C1	Size 8, contact for 75 ohm coax cable	Pin: 852-056-01 Skt: 852-057-01	V73263, V75268, V76261	859-042-01	aerospace-grade digital video
D	Size 8, differential twinax contact for 24 AWG twinax cable	Pin: 853-014-05 Skt: 853-013-05	M17 /176-00002	859-042-01	1553 databus / differential signal
E*	Size 8, El Ochito® contact for 26 AWG	White Pin: 858-003-02 Skt: 858-004-02	963-003-26 963-033-26	687-643-8-2	1G/40G Base-T Ethernet (white)
	Size 8, El Ochito® contact for 24/26-30 AWG Cable	**Blue** **Pin: 858-028-02** **Skt: 858-029-02**	963-110 & 963-118	687-643-8-2	USB 3.0 (Blue)
	Size 8, El Ochito® contact for 26-30 AWG Cable	**Red** **Pin: 858-030-02** **Skt: 858-031-02**	963-033-26	687-643-8-2	SATA 3.0 General High Speed (red)
Q	Size 8, contact for 24 AWG Quadrax	Pin: 854-001-02 Skt: 854-002-02	963-020	859-042-02	10/100Base-T ethernet
P	Size 8, power contact for 8 AWG	Pin: 850-014 Skt: 850-013	M22759/11 or equivalent	859-042-03	Power
T	Size 8, triax/ concentric twinax for twinax cable	Pin: 853-003-08-625 Skt: 853-004-08-628	M17 /176-00002	859-042-01	1553 Databus

* See Table II for Contact Positions. See Figure 2 for orientation of inner pins relative to connector main key/keyway.

© 2022 Glenair, Inc • 1211 Air Way, Glendale, CA 91201 • 818-247-6000 • www.glenair.com • U.S. CAGE code 06324 • SuperNine® Catalog
Dimensions in Inches (millimeters) are subject to change without notice.

SuperNine® High-Speed Series

MIL-DTL-38999 Series III Type Environmental Connectors

233-226 QDC Plug with shielded crimp removable contacts

El Ochito Protocols		
		
WHITE	**BLUE**	**RED**
40GBASE-T	USB 3.0	Multi Gigabit 100 ohm protocols HDMI, SATA, DisplayPort 1.4

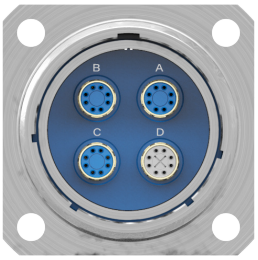

Example Code E7



Example Code E5

FIGURE 2: REFERENCE ORIENTATION OF INNER PINS RELATIVE TO CONNECTOR MAIN KEY/KEYWAY

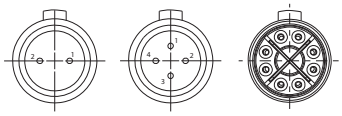

DIFERENTIAL TWINAX | QUADRAX | EL OCHITO SIZE 8

Table I: Lanyard Length			
Sym	L ±.236 (±6)	Sym	L ±.236 (±6)
A	4.016 (102.01)	M	10.000 (254.00)
B	4.527 (114.99)	N	10.511 (266.98)
C	5.000 (127.00)	P	11.023 (279.98)
D	5.511 (139.98)	R	11.535 (292.99)
E	6.024 (153.01)	S	12.007 (304.98)
F	6.535 (165.99)	T	12.519 (317.98)
G	7.007 (177.98)	U	13.031 (330.99)
H	7.519 (190.98)	V	14.015 (355.98)
I	7.992 (203.00)	W	15.000 (381.00)
J	8.503 (215.98)	X	16.023 (406.98)
K	9.015 (228.98)	Y	17.007 (431.98)
L	9.527 (241.99)	Z	18.031 (457.99)

El Ochito Contact Configuration								
SYM	CAVITY A	CAVITY B	CAVITY C	CAVITY D	CAVITY E	CAVITY F	CAVITY G	CAVITY H
E	W	W	W	W	W	W	W	W
E2	B	W	W	W	W	W	W	W
E3	R	W	W	W	W	W	W	W
E4	B	B	W	W	W	W	W	W
E5	R	B	W	W	W	W	W	W
E6	R	R	W	W	W	W	W	W
E7	B	B	B	W	W	W	W	W
E8	R	B	B	W	W	W	W	W
E9	R	R	B	W	W	W	W	W
E10	R	R	R	W	W	W	W	W
E11	B	B	B	B	W	W	W	W
E12	R	B	B	B	W	W	W	W
E13	R	R	B	B	W	W	W	W
E14	R	R	R	B	W	W	W	W
E15	R	R	R	R	W	W	W	W
E16	B	B	B	B	B	W	W	W
E17	R	B	B	B	B	W	W	W
E18	R	R	B	B	B	W	W	W
E19	R	R	R	B	B	W	W	W
E20	R	R	R	R	B	W	W	W
E21	R	R	R	R	R	W	W	W
E22	B	B	B	B	B	B	W	W
E23	R	B	B	B	B	B	W	W
E24	R	R	B	B	B	B	W	W
E25	R	R	R	B	B	B	W	W
E26	R	R	R	R	B	B	W	W
E27	R	R	R	R	R	B	W	W
E28	R	R	R	R	R	R	W	W
E29	B	B	B	B	B	B	B	W
E30	R	B	B	B	B	B	B	W
E31	R	R	B	B	B	B	B	W
E32	R	R	R	B	B	B	B	W
E33	R	R	R	R	B	B	B	W
E34	R	R	R	R	R	B	B	W
E35	R	R	R	R	R	R	B	W
E36	R	R	R	R	R	R	R	W
E37	B	B	B	B	B	B	B	B
E38	R	B	B	B	B	B	B	B
E39	R	R	B	B	B	B	B	B
E40	R	R	R	B	B	B	B	B
E41	R	R	R	R	B	B	B	B
E42	R	R	R	R	R	B	B	B
E43	R	R	R	R	R	R	B	B
E44	R	R	R	R	R	R	R	B
E45	R	R	R	R	R	R	R	R

© 2022 Glenair, Inc • 1211 Air Way, Glendale, CA 91201 • 818-247-6000 • www.glenair.com • U.S. CAGE code 06324 • SuperNine® Catalog
Dimensions in Inches (millimeters) are subject to change without notice.

SuperNine® High-Speed Series

MIL-DTL-38999 Series III Type Environmental Connectors

233-226 QDC Plug with shielded crimp removable contacts

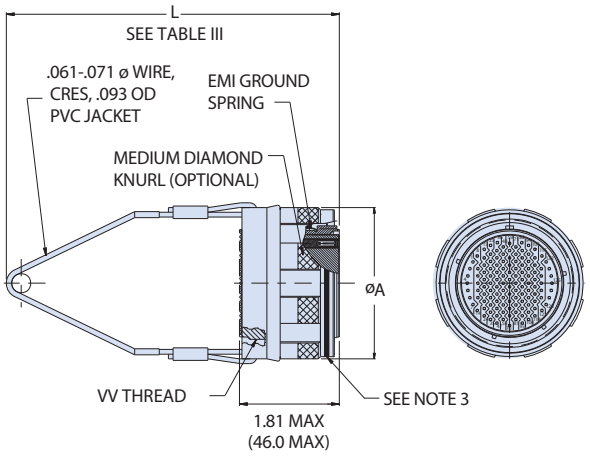

TYPE -4

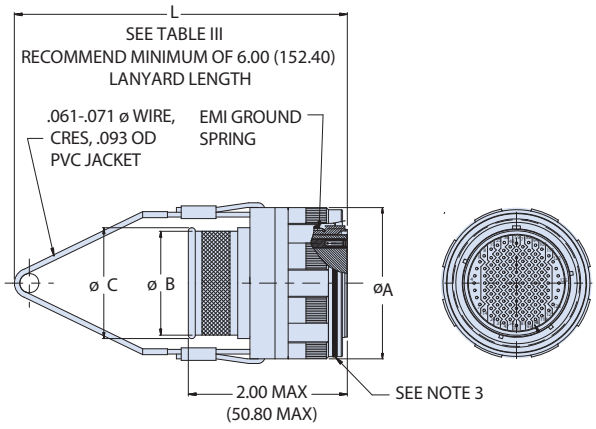

TYPE -4
S - SINGLE BAND

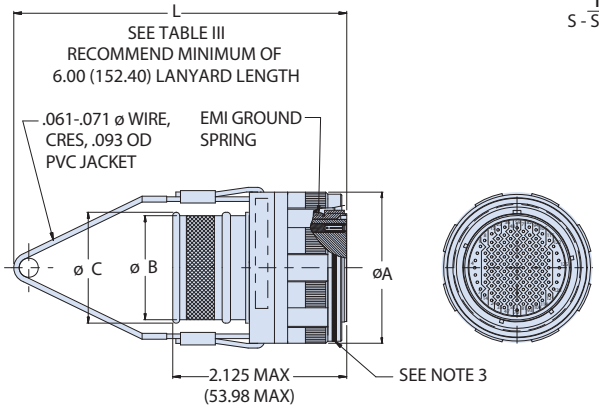

TYPE -4
B - BOOT GROOVE

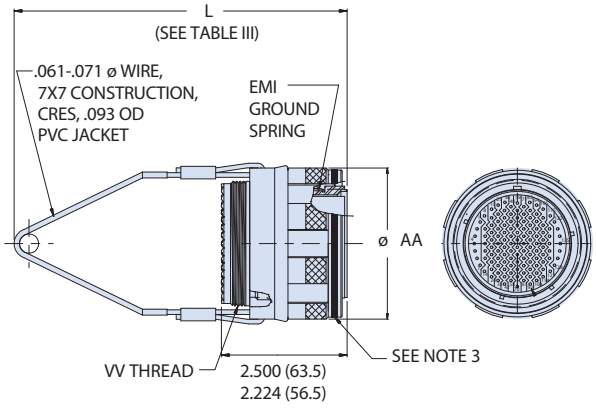

TYPE -1

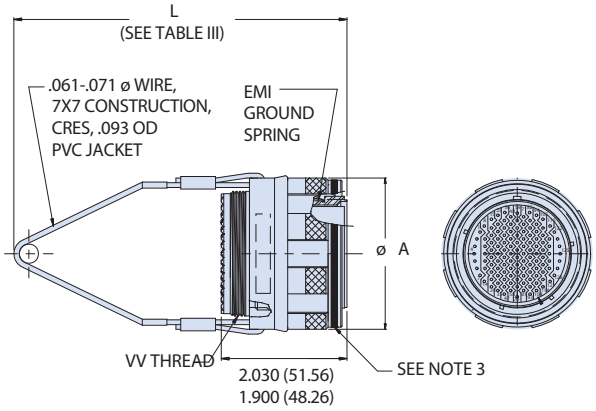

TYPE -6

*Refer to el Ochito contact positions table for orientation.

© 2022 Glenair, Inc • 1211 Air Way, Glendale, CA 91201 • 818-247-6000 • www.glenair.com • U.S. CAGE code 06324 • SuperNine® Catalog
Dimensions in Inches (millimeters) are subject to change without notice.

Rev. 12.12.23

SuperNine® High-Speed Series

MIL-DTL-38999 Series III Type Environmental Connectors

233-226 QDC Plug with shielded crimp removable contacts

General Dimensions				
Shell Size	Shell Size Code	ø A ±.06 (1.52)	ø AA ±.06 (1.52)	VV Thread
09	A	1.060 (26.92)	N/A	M12x1-6g-0.100R
11	B	1.180 (29.97)	1.242 (31.55)	M15x1-6g-0.100R
13	C	1.310 (33.27)	1.325 (33.65)	M18x1-6g-0.100R
15	D	1.437 (36.50)	1.499 (38.07)	M22x1-6g-0.100R
17	E	1.560 (39.62)	1.622 (41.20)	M25x1-6g-0.100R
19	F	1.690 (42.93)	1.752 (44.50)	M28x1-6g-0.100R
21	G	1.760 (44.70)	1.822 (46.28)	M31x1-6g-0.100R
23	H	1.900 (48.26)	1.962 (49.83)	M34x1-6g-0.100R
25	J	2.000 (50.80)	2.125 (53.97)	M37x1-6g-0.100R

Size #9 only available on Type -4

Integral Backshell Dimensions		
Shell Size	ø B	ø C
11	0.550 (13.97)	0.595 (15.11)
13	0.670 (17.02)	0.715 (18.16)
15	0.815 (20.70)	0.860 (21.84)
17	0.945 (24.00)	0.990 (25.15)
19	1.050 (26.67)	1.100 (27.94)
21	1.170 (29.72)	1.220 (30.99)
23	1.290 (32.77)	1.340 (34.04)
25	1.400 (35.56)	1.450 (36.83)

Separation Pull Forces Maximum			
Shell Size	Shell Size Code	Straight Pull Lbs (Newton)	15 Degree Pull Lbs (Newton)
09	A	44.96 (200)	55.08 (245)
11	B	44.96 (200)	55.08 (245)
13	C	44.96 (200)	55.08 (245)
15	D	44.96 (200)	55.08 (245)
17	E	44.96 (200)	100.04 (445)
19	F	89.92 (400)	100.04 (445)
21	G	89.92 (400)	100.04 (445)
23	H	89.92 (400)	100.04 (445)
25	J	89.92 (400)	100.04 (445)

NOTES

1. Material/Finish
   - Barrel, coupling nut, lanyard ring: see part number development
   - Ratchet ring, detent spring: stainless steel/passivated
   - Grounding spring: BeCu alloy / eletroless nickel
   - Wave spring: CRES / passivated
   - Insulators: high grade rigid dielectric/ N.A.
   - Seals: fluorosilicone blend / N.A.
   - Contacts and grommet followers to be ordered separately
2. 233-226 Connector is designed to mate with any QPL manufacturer's MIL-DTL-38999, Series III receptacle connector with the same shell size, insert arrangement, polarization and mating contact
3. Blue color band indicates rear release retention system
4. For backshell extender consult factory.
5. Dimension B is clearance to accommodate MIL-C-85049 accessories.
6. All contacts, insertion/ removal tool, and sealing plug to be ordered separately
7. Connector 233-260 is commercial equivalent of D38999/29, /30 and /31 type 2
8. Ground plane option only available for insert arrangements where all contacts are shielded type
9. Modification code 909 can be added to the end of part number to include contacts. See contact reference guide table. All remaining combo contact arrangements for size #22, 20, 16 and 12 are to be power.

© 2022 Glenair, Inc • 1211 Air Way, Glendale, CA 91201 • 818-247-6000 • www.glenair.com • U.S. CAGE code 06324 • SuperNine® Catalog
Dimensions in Inches (millimeters) are subject to change without notice.

SuperNine® High-Speed Series

MIL-DTL-38999 Series III Type Environmental Connectors

233-218 PC tail receptacle with shielded contacts

Part Number Development									
Sample Part Number	**233-218**	**–00**	**M**	**17**	**E**	**–**	**2**	**S**	**N**
Series / Basic Part No.	SuperNine® High-Speed PC tail wall mount receptacles with threaded strandoffs								
Connector Style	**-07=** Receptacle, Jam-Nut **-00** = Receptacle, Wall-Mount with Slotted Holes **-CM** = Receptacle, Wall Mount with Metric Clinch Nuts **-CS** = Receptacle, Wall Mount with Standard Clinch Nuts **-HM** = Receptacle, Wall Mount with Metric Helicoils **-HS** = Receptacle, Wall Mount with Standard Helicoils								
Material/Finish	**NF** = Cadmium Olive Drab **MT** = Nickel PTFE **ME** = Electroless Nickel **ZR** = Black Zinc Nickel								
Shell Size	**9**, **11**, **13**, **17**, **19**, **21**, **23**, **25**								
Contact Type (Table I)	**C** = Coax **C1** = Coax, 75 ohm **D** = Differential Twinax **E** = El Ochito[7] **Q** = Quadrax **P** = Power **T** = Triax/Concentric Twinax **Omit** = Per MIL-STD-1560 PCB footprints on pgs. C-15 thru C-17								
Ground Option	**G** = Common Ground **–** = None								
Insert Arrangement	Per MIL-STD-1560, see page C-5 and C-6								
Contact Style	**P** = Pin, PC Tail **S** = Socket, PC Tail								
Alternate Polarization*	**A**, **B**, **C**, **D**, **E**, **N** = Normal (IAW MIL-DTL-38999 Series III)								

***Refer to Section A for alternate key polarization options and recommended panel cutout dimensions**

Table I: Contact Type

Sym	Description	Glenair P/N	Wire Type	Grommet Follower	Application Notes
C	Size 16, contact for coax cable, per M39029/76 & /77;	Pin: 852-008-16-424 Skt: 852-009-16-428	RG174, RG316, RG179	N/A	Analog radio frequency or microwave applications
	Size 12, contact for coax cable, per M39029/102 & /103	Pin: 852-004-12-558 Skt: 852-005-12-559	RG174, RG316, RG179	N/A	
	Size 8, contact for coax cable, per M39029/59 & /60	Pin: 852-007-08-367 Skt: 852-006-08-366	M17 /95-RG180	859-042-02	
C1	Size 8, contact for 75 ohm coax cable	Pin: 852-056-01 Skt: 852-057-01	V73263, V75268, V76261	859-042-01	aerospace-grade digital video
D	Size 8, diff. twinax contact for 24 AWG twinax cable	Pin: 853-014-05 Skt: 853-013-05	M17 /176-00002	859-042-01	1553 databus / differential signal
E*	Size 8, El Ochito® contact for 26 AWG	White Pin: 858-003-02 Skt: 858-004-02	963-003-26	687-643-8-2	1G/10G Base-T Ethernet (white)
	Size 8, El Ochito® contact for 24/26-30 AWG Cable	**Blue** **Pin: 858-028-02** **Skt: 858-029-02**	963-110 & 963-118	687-643-8-2	USB 3.0 (Blue)
	Size 8, El Ochito® contact for 26-30 AWG Cable	**Red** **Pin: 858-030-02** **Skt: 858-031-02**	963-033-26	687-643-8-2	SATA 3.0 General High Speed (red)
Q	Size 8, contact for 24 AWG Quadrax	Pin: 854-001-02 Skt: 854-002-02	963-020	859-042-02	10/100Base-T ethernet
P	Size 8, power contact for 8 AWG	Pin: 850-014 Skt: 850-013	M22759/11 or equivalent	859-042-03	Power
T	Size 8, triax/ concentric twinax for twinax cable	Pin: 853-003-08-625 Skt: 853-004-08-628	M17 /176-00002	859-042-01	1553 Databus

PC Tail Diameter

Contact Size	PC Tail ØV
No. 22	.020 (0.51) .018 (0.46)
No. 20	.030 (0.76) .028 (0.71)
No. 16	.040 (1.02) .038 (0.97)
No. 12	.072 (1.78) .070 (1.78)
No. 8	.182 (4.62) .178 (4.52)

FIGURE 2: REFERENCE ORIENTATION OF INNER PINS RELATIVE TO CONNECTOR MAIN KEY/KEYWAY

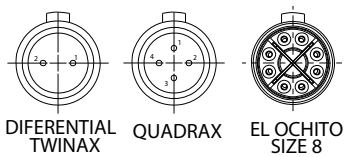

* See Table II for Contact Positions. See Figure 2 for orientation of inner pins relative to connector main key/keyway.

SuperNine® High-Speed Series

MIL-DTL-38999 Series III Type Environmental Connectors

233-218 PC tail receptacle with shielded contacts



Example Code E7



Example Code E5

NOTES

1. Coax contact mating interfaces shall be in accordance with the following:
   - size #16 per M39029/76 & /77
   - size #12 per M39029/102 & 103
   - size #8 per M39029/59 & 60
2. Ground plane option only available for insert arrangements where all contacts are shielded type.
3. See figure 2 for reference orientation of the inner pins relative to connector main keyway.
4. Insert arrangement IAW MIL-STD-1560 and figure 1. Contact manufacturer for additional arrangement options
5. Glenair 233-218 wall mount and jam-nut receptacle connectors should be mated to Glenair 233-217 or 233-224 plug with appropriate contacts to optimize performance.
6. Glenair 233-218 receptacle connectors are designed to meet or exceed the applicable mechanical, dimensional, electrical, and environmental requirements of MIL-DTL-38999, D38999/20, D38999/24 and MIL-STD-1560 except as shown and/or noted. Receptacle mates with any QPL manufacturer's MIL-DTL-38999, Series III plug connector, D38999/26, having the same shell size, insert arrangement, polarization, and mating contact.
7. El Ochito mating contact shall be in accordance with El Ochito contact configuration table
8. Front panel mount only.
9. For optimal El Ochito performance, see Glenair application note AN0002.
10. Material/finish:
    - Shell, lockring, jam-nut: see part number development
    - Contacts: copper alloy / gold plated
    - Insulators: high grade rigid dielectric / N.A.
    - Seals: fluorosilicone blend / N.A.
    - Potting: epoxy / N.A.
    - O-ring: silver plated aluminum in fluorosilicone (cho-seal 1298 or equivalent)

El Ochito Contact Configuration								
SYM	CAVITY A	CAVITY B	CAVITY C	CAVITY D	CAVITY E	CAVITY F	CAVITY G	CAVITY H
E	W	W	W	W	W	W	W	W
E2	B	W	W	W	W	W	W	W
E3	R	W	W	W	W	W	W	W
E4	B	B	W	W	W	W	W	W
E5	R	B	W	W	W	W	W	W
E6	R	R	W	W	W	W	W	W
E7	B	B	B	W	W	W	W	W
E8	R	B	B	W	W	W	W	W
E9	R	R	B	W	W	W	W	W
E10	R	R	R	W	W	W	W	W
E11	B	B	B	B	W	W	W	W
E12	R	B	B	B	W	W	W	W
E13	R	R	B	B	W	W	W	W
E14	R	R	R	B	W	W	W	W
E15	R	R	R	R	W	W	W	W
E16	B	B	B	B	B	W	W	W
E17	R	B	B	B	B	W	W	W
E18	R	R	B	B	B	W	W	W
E19	R	R	R	B	B	W	W	W
E20	R	R	R	R	B	W	W	W
E21	R	R	R	R	R	W	W	W
E22	B	B	B	B	B	B	W	W
E23	R	B	B	B	B	B	W	W
E24	R	R	B	B	B	B	W	W
E25	R	R	R	B	B	B	W	W
E26	R	R	R	R	B	B	W	W
E27	R	R	R	R	R	B	W	W
E28	R	R	R	R	R	R	W	W
E29	B	B	B	B	B	B	B	W
E30	R	B	B	B	B	B	B	W
E31	R	R	B	B	B	B	B	W
E32	R	R	R	B	B	B	B	W
E33	R	R	R	R	B	B	B	W
E34	R	R	R	R	R	B	B	W
E35	R	R	R	R	R	R	B	W
E36	R	R	R	R	R	R	R	W
E37	B	B	B	B	B	B	B	B
E38	R	B	B	B	B	B	B	B
E39	R	R	B	B	B	B	B	B
E40	R	R	R	B	B	B	B	B
E41	R	R	R	R	B	B	B	B
E42	R	R	R	R	R	B	B	B
E43	R	R	R	R	R	R	B	B
E44	R	R	R	R	R	R	R	B
E45	R	R	R	R	R	R	R	R

© 2022 Glenair, Inc • 1211 Air Way, Glendale, CA 91201 • 818-247-6000 • www.glenair.com • U.S. CAGE code 06324 • SuperNine® Catalog
Dimensions in Inches (millimeters) are subject to change without notice.

SuperNine® High-Speed Series

MIL-DTL-38999 Series III Type Environmental Connectors

233-218 PC tail receptacle with shielded contacts

00, CM, CS, HM, HS - WALL MOUNT RECEPTACLES

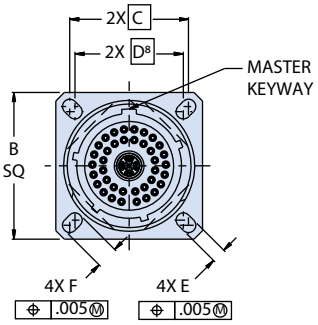

00 - WALL MOUNT RECEPTACLE
WITH SLOTTED HOLES

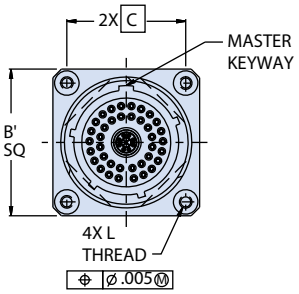

CS - WALL MOUNT RECEPTACLE
WITH STANDARD CLINCH NUTS

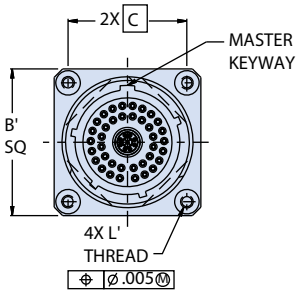

CM - WALL MOUNT RECEPTACLE
WITH METRIC CLINCH NUTS

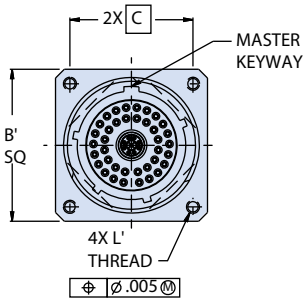

HM - WALL MOUNT RECEPTACLE
WITH METRIC HELICOILS

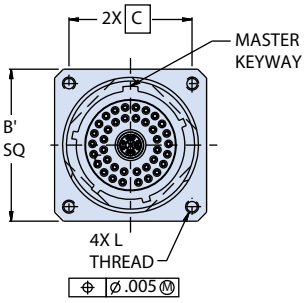

HS - WALL MOUNT RECEPTACLE
WITH STANDARD HELICOIL

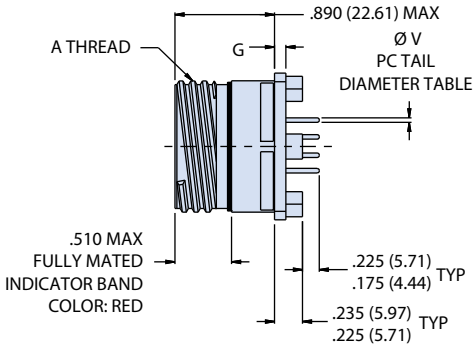

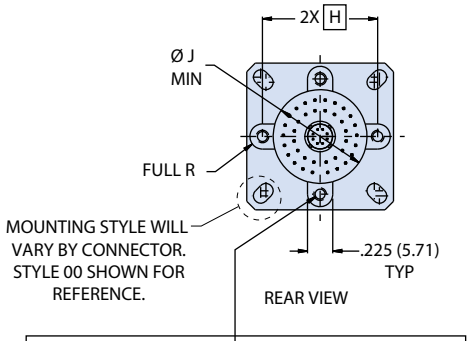

SHELL STYLE 00, CS & HS	SHELL STYLE CM & HM
4X #4-40 UNC-2B X .156 MIN THD DP @ 90° APART	4X M3 X 0.5 X .156 MIN THD DP @ 90° APART

© 2022 Glenair, Inc • 1211 Air Way, Glendale, CA 91201 • 818-247-6000 • www.glenair.com • U.S. CAGE code 06324 • SuperNine® Catalog
Dimensions in Inches (millimeters) are subject to change without notice.

SuperNine® High-Speed Series

MIL-DTL-38999 Series III Type Environmental Connectors

233-218 PC tail receptacle with shielded contacts

Dimensions														
Shell Size Code	Shell Size	A Thd -0.1P-0.3L-TS-2A	B Sq	B' Sq	C Bsc[8]	D Bsc	E	F	G	G'	H Bsc	Ø J Min	L Thd	L' Thd
A	9	.6250	.949 (24.10) .925 (23.50)	1.094 (27.79) 1.054 (26.77)	.719 (18.26)	.594 (15.09)	.136 (3.45) .120 (3.05)	.224 (5.69) .208 (5.28)	.122 (3.10) .083 (2.11)	.179 .140 (3.56)	.594 (15.09)	.340 (8.64)	.112-40 UNC	M3X0.5
B	11	.7500	1.043 (26.49) 1.019 (25.88)	1.187 (30.15) 1.147 (29.13)	.812 (20.62)	.719 (18.26)		.202 (5.13) .186 (4.72)			.719 (18.26)	.468 (11.89)		
C	13	.8750	1.138 (28.91) 1.114 (28.30)	1.281 (32.54) 1.241 (31.52)	.906 (23.01)	.812 (20.62)					.812 (20.62)	.572 (14.53)		
D	15	1.0000	1.232 (31.29) 1.208 (30.68)	1.344 (34.14) 1.304 (33.12)	.969 (24.61)	.906 (23.01)		.181 (4.60) .165 (4.19)			.906 (23.01)	.705 (17.91)		
E	17	1.1875	1.323 (33.60) 1.299 (32.99)	1.437 (36.50) 1.397 (35.48)	1.062 (26.97)	.969 (24.61)					1.030 (26.16)	.830 (21.08)		
F	19	1.2500	1.449 (36.80) 1.425 (36.20)	1.531 (38.89) 1.491 (37.87)	1.156 (29.36)	1.062 (26.97)		.202 (5.13) .186 (4.72)	.153 (3.89)		1.150 (29.21)	.934 (23.72)		
G	21	1.3750	1.575 (40.00) 1.551 (39.40)	1.625 (41.28) 1.585 (40.26)	1.250 (31.75)	1.156 (29.36)					1.221 (31.01)	1.055 (26.80)		
H	23	1.5000	1.701 (43.21) 1.677 (42.60)	1.750 (44.45) 1.710 (43.43)	1.375 (34.92)	1.250 (31.75)	.162 (4.11) .146 (3.71)	.250 (6.35) .234 (5.94)	.114 (2.90)	.190 (4.83) .170 (4.32)	1.360 (34.54)	1.160 (29.46)	.138-32 UNC	M4X0.7
J	25	1.6250	1.823 (46.30) 1.799 (45.69)	1.875 (47.63) 1.835 (46.61)	1.500 (38.10)	1.375 (34.92)					1.475 (37.47)	1.307 (33.20)		

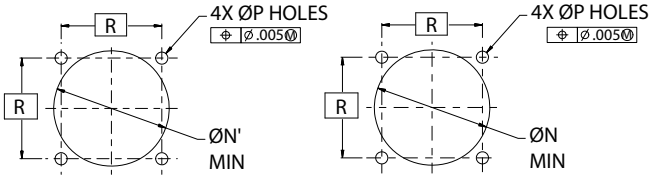

FRONT PANEL MOUNT

BACK PANEL MOUNT

RECOMMENDED MOUNTING HOLES
FOR WALL MOUNT RECEPTACLES

Wall Mount Mounting Hole Dimensions					
Shell Size Code	Shell Size	ØN Min	ØN' Min[8]	ØP Holes	R Bsc
A	9	.656 (16.66)	.516 (13.11)	.133 (3.38) .123 (3.12)	.719 (18.26)
B	11	.796 (20.22)	.625 (15.88)		.812 (20.62)
C	13	.922 (23.42)	.750 (19.05)		.906 (23.01)
D	15	1.047 (26.59)	.906 (23.01)		.969 (24.61)
E	17	1.219 (30.96)	1.016 (25.81)		1.062 (26.97)
F	19	1.297 (32.94)	1.141 (28.98)		1.156 (29.36)
G	21	1.422 (36.12)	1.266 (32.16)		1.250 (31.75)
H	23	1.547 (39.29)	1.375 (34.92)	.159 (4.04) .149 (3.78)	1.375 (34.92)
J	25	1.672 (42.47)	1.484 (37.69)	.155 (3.94) .145 (3.68)	1.500 (38.10)

© 2022 Glenair, Inc • 1211 Air Way, Glendale, CA 91201 • 818-247-6000 • www.glenair.com • U.S. CAGE code 06324 • SuperNine® Catalog
Dimensions in Inches (millimeters) are subject to change without notice.

SuperNine® High-Speed Series

MIL-DTL-38999 Series III Type Environmental Connectors

233-218 PC tail receptacle with shielded contacts

07 - JAM-NUT MOUNT RECEPTACLE

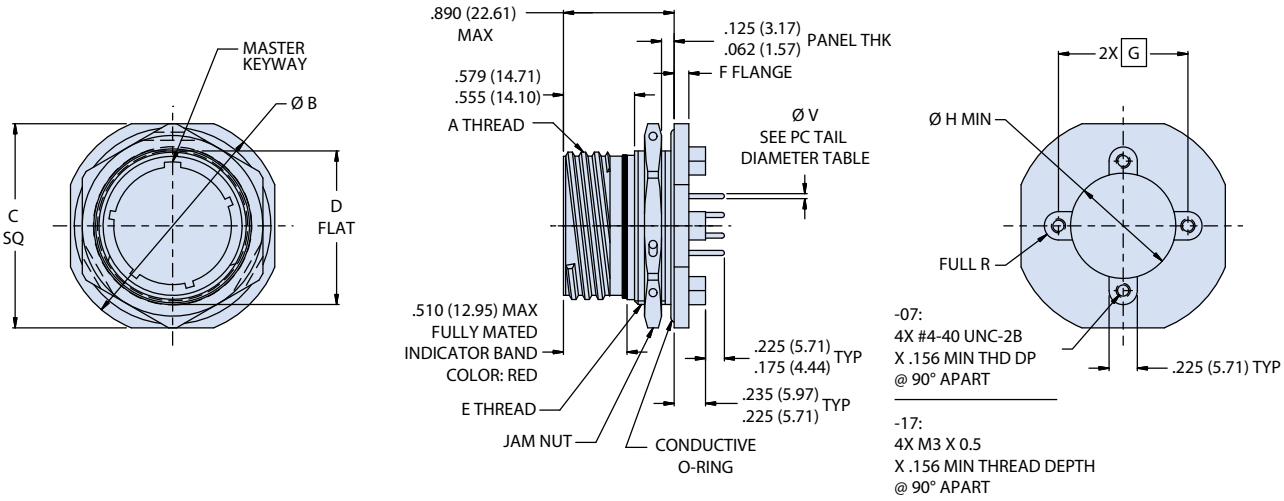

Dimensions									
Shell Size Code	Shell Size	A Thd -0.1P-0.3L-TS-2A	ØB	C Sq	D Flat	E Thd ISO Metric	F	G Bsc	Ø H
A	9	.6250	1.200 (30.48) 1.178 (29.92)	1.078 (27.38) 1.048 (26.62)	0.654 (16.61) 0.645 (16.38)	M17 X 1.0-6g	0.122 (3.10) 0.083 (2.11)	0.594 (15.09)	0.340 (8.64)
B	11	.7500	1.386 (35.20) 1.362 (34.59)	1.268 (32.21) 1.236 (31.39)	0.755 (19.18) 0.745 (18.92)	M20 X 1.0-6g		0.719 (18.26)	0.468 (11.89)
C	13	.8750	1.512 (38.40) 1.488 (37.80)	1.390 (35.31) 1.484 (37.69)	0.942 (23.93) 0.932 (23.67)	M25 X 1.0-6g		0.812 (20.62)	0.572 (14.53)
D	15	1.0000	1.638 (41.61) 1.614 (41.00)	1.516 (38.51) 1.484 (37.69)	1.066 (27.08) 1.056 (26.82)	M28 X 1.0-6g		0.906 (23.01)	0.705 (17.91)
E	17	1.1875	1.764 (44.81) 1.740 (44.20)	1.642 (41.71) 1.610 (40.89)	1.191 (30.25) 1.181 (30.00)	M32 X 1.0-6g		1.030 (26.16)	0.830 (21.08)
F	19	1.2500	1.949 (49.50) 1.925 (48.90)	1.827 (46.41) 1.795 (45.59)	1.316 (33.43) 1.306 (33.17)	M35 X 1.0-6g	0.153 (3.89) 0.114 (2.90)	1.150 (29.21)	0.934 (23.72)
G	21	1.3750	2.075 (52.71) 2.051 (52.10)	1.953 (49.61) 1.921 (48.79)	1.441 (36.60) 1.431 (36.35)	M38 X 1.0-6g		1.221 (31.01)	1.055 (26.80)
H	23	1.5000	2.201 (55.91) 2.177 (55.30)	2.079 (52.81) 2.047 (51.99)	1.566 (39.78) 1.556 (39.52)	M41 X 1.0-6g		1.360 (34.54)	1.160 (29.46)
J	25	1.6250	2.323 (59.00) 2.299 (58.39)	2.205 (56.01) 2.173 (55.19)	1.691 (42.95) 1.681 (42.70)	M44 X 1.0-6g		1.475 (37.47)	1.307 (33.20)

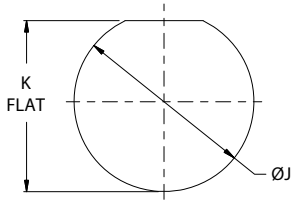

RECOMMENDED PANEL CUT-OUT

Jam-Nut Mount Mounting Hole Dimensions							
Shell Size Code	Shell Size	ØJ	ØK Flat	Shell Size Code	Shell Size	ØJ	ØK Flat
A	9	.703 (17.86) .693 (17.60)	.661 (16.79) .654 (16.61)	E	17	1.270 (32.26) 1.260 (32.00)	1.210 (30.73) 1.200 (30.48)
B	11	.835 (21.21) .825 (20.96)	.771 (19.58) .761 (19.33)	F	19	1.395 (35.43) 1.385 (35.18)	1.335 (33.91) 1.325 (33.65)
C	13	1.020 (25.91) 1.010 (25.65)	.955 (24.26) .945 (24.00)	G	21	1.520 (38.61) 1.510 (38.35)	1.460 (37.08) 1.450 (36.83)
D	15	1.145 (29.08) 1.135 (28.83)	1.085 (27.56) 1.075 (27.30)	H	23	1.645 (41.78) 1.635 (41.53)	1.585 (40.26) 1.575 (40.00)
				J	25	1.770 (44.96) 1.760 (44.70)	1.710 (43.43) 1.700 (43.18)

© 2022 Glenair, Inc • 1211 Air Way, Glendale, CA 91201 • 818-247-6000 • www.glenair.com • U.S. CAGE code 06324 • SuperNine® Catalog
Dimensions in Inches (millimeters) are subject to change without notice.

ADVANCED PERFORMANCE

SuperNine® High-Speed Series

MIL-DTL-38999 Series III Type Environmental Connectors

233-225 dual flange receptacle with PC tail contacts

Part Number Development									
Sample Part Number	**233-225**	**-00**	**NF**	**17**	**E**	**-**	**2**	**P**	**N**
Series / Basic Part	SuperNine® High-Speed, dual flange wall-mount receptacle								
Connector Style*	**-07** = Receptacle, Jam-Nut with Standard Standoff Thread **-17** = Receptacle, Jam-Nut, with Metric Standoff Thread **-00** = Receptacle, Wall-Mount with Slotted Holes and Stand Off with Standard Threads **-10** = Receptacle, Wall-Mount with Slotted Holes and Stand Off with Metric Threads **-CM** = Receptacle, Wall-Mount with Metric Clinch Nuts **-CS** = Receptacle, Wall Mount with Standard Clinch Nuts **-HM** = Receptacle, Wall Mount with Metric Helicoils **-HS** = Receptacle, Wall Mount with Standard Helicoils								
Material/Finish	**NF** = Cadmium Olive Drab **ME** = Electroless Nickel **MT** = Nickel PTFE **ZR** = Black Zinc Nickel								
Shell Size	**9**, **11**, **13**, **17**, **19**, **21**, **23**, **25**								
Contact Type (See Table I)	**C** = Coax, 50 ohm[1] **C1** = Coax, 75 ohm[1] **D** = Differential Twinax **E** = El Ochito[7] **P** = Power **Q** = Quadrax **T** = Triax/Concentric Twinax **Omit** = Per MIL-STD-1560 PCB footprints on pgs. C-15 thru C-17								
Ground Option	**G** = Common Ground **–** = None								
Insert Arrangement	Per MIL-STD-1560, see page C-5 and C-6								
Contact Style	**P** = Pin, PC Tail **S** = Socket, PC Tail								
Alternate Polarization*	**A**, **B**, **C**, **D**, **E**, **N** = Normal (IAW MIL-DTL-38999 Series III)								

***Refer to Section A for alternate key polarization options and recommended panel cutout dimensions**

Table I: Contact Type

Sym	Description	Glenair P/N	Wire Type	Grommet Follower	Application Notes
C	Size 16, contact for coax cable, per M39029/76 & /77;	Pin: 852-008-16-424 Skt: 852-009-16-428	RG174, RG316, RG179	N/A	Analog radio frequency or microwave applications
	Size 12, contact for coax cable, per M39029/102 & /103	Pin: 852-004-12-558 Skt: 852-005-12-559	RG174, RG316, RG179	N/A	
	Size 8, contact for coax cable, per M39029/59 & /60	Pin: 852-007-08-367 Skt: 852-006-08-366	M17 /95-RG180	859-042-02	
C1	Size 8, contact for 75 ohm coax cable	Pin: 852-056-01 Skt: 852-057-01	V73263, V75268, V76261	859-042-01	aerospace-grade digital video
D	Size 8, diff. twinax contact for 24 AWG twinax cable	Pin: 853-014-05 Skt: 853-013-05	M17 /176-00002	859-042-01	1553 databus / differential signal
E*	Size 8, El Ochito® contact for 26 AWG	White Pin: 858-003-02 Skt: 858-004-02	963-003-26 963-033-26	687-643-8-2	1G/10G Base-T Ethernet (white)
	Size 8, El Ochito® contact for 24/26-30 AWG Cable	**Blue** **Pin: 858-028-02** **Skt: 858-029-02**	963-110 & 963-118	687-643-8-2	USB 3.0 (Blue)
	Size 8, El Ochito® contact for 26-30 AWG Cable	**Red** **Pin: 858-030-02** **Skt: 858-031-02**	963-033-26	687-643-8-2	SATA 3.0 General High Speed (red)
Q	Size 8, contact for 24 AWG Quadrax	Pin: 854-001-02 Skt: 854-002-02	963-020	859-042-02	10/100Base-T ethernet
P	Size 8, power contact for 8 AWG	Pin: 850-014 Skt: 850-013	M22759/11 or equivalent	859-042-03	Power
T	Size 8, triax/concentric twinax for twinax cable	Pin: 853-003-08-625 Skt: 853-004-08-628	M17 /176-00002	859-042-01	1553 Databus

PC Tail Diameter

Contact Size	PC Tail ØV
No. 22	.020 (0.51) .018 (0.46)
No. 20	.030 (0.76) .028 (0.71)
No. 16	.040 (1.02) .038 (0.97)
No. 12	.072 (1.78) .070 (1.78)
No. 8	.182 (4.62) .178 (4.52)

* See Table II for Contact Positions. See Figure 2 for orientation of inner pins relative to connector main key/keyway.

© 2022 Glenair, Inc • 1211 Air Way, Glendale, CA 91201 • 818-247-6000 • www.glenair.com • U.S. CAGE code 06324 • SuperNine® Catalog
Dimensions in Inches (millimeters) are subject to change without notice.

SuperNine® High-Speed Series

MIL-DTL-38999 Series III Type Environmental Connectors

233-225 dual flange receptacle with PC tail contacts



Example Code E7



Example Code E5

FIGURE 2: REFERENCE ORIENTATION OF INNER PINS RELATIVE TO CONNECTOR MAIN KEY/KEYWAY

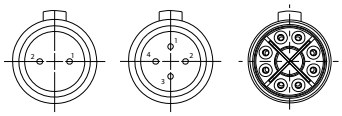

DIFERENTIAL TWINAX | QUADRAX | EL OCHITO SIZE 8

NOTES

1. Coax contact mating interfaces in accordance with the following:
   - Size #16 per M39029/76 & /77
   - Size #12 per M39029/102 & /103
   - Size #8, 50 ohm per M39029/50 & /60
2. Ground plane option only available for insert arrangements where all contacts are shielded type.
3. See page C-4, figure 2 for reference orientation of the inner pins relative to connector main keyway
4. Glenair 233-225 wall mount (/20) and jam-nut (/24) receptacle connectors should be mated to Glenair's 233-217 plug with appropriate contacts to optimize performance.
5. Glenair's 233-225 receptacle connector is designed to meet or exceed the mechanical, dimensional, electrical, and environmental requirements of MIL-DTL-38999, D38999/20, D38999/24 and MIL-STD-1560 except as shown and/or noted.
6. All contacts are potted and non-removable.
7. Front panel mount only
8. El Ochito mating contact shall be in accordance with El Ochito Contact Position Table
9. Material/Finish
   - Shell: see part number development
   - Contacts: copper alloy / gold plated
   - Insulators: high grade rigid dielectric/ N.A.
   - For common ground option: aluminum alloy/ manufactures option
   - Seals: fluorosilicone blend / N.A.
   - Potting: epoxy / N.A.

El Ochito Contact Configuration

SYM	CAVITY A	CAVITY B	CAVITY C	CAVITY D	CAVITY E	CAVITY F	CAVITY G	CAVITY H
E	W	W	W	W	W	W	W	W
E2	B	W	W	W	W	W	W	W
E3	R	W	W	W	W	W	W	W
E4	B	B	W	W	W	W	W	W
E5	R	B	W	W	W	W	W	W
E6	R	R	W	W	W	W	W	W
E7	B	B	B	W	W	W	W	W
E8	R	B	B	W	W	W	W	W
E9	R	R	B	W	W	W	W	W
E10	R	R	R	W	W	W	W	W
E11	B	B	B	B	W	W	W	W
E12	R	B	B	B	W	W	W	W
E13	R	R	B	B	W	W	W	W
E14	R	R	R	B	W	W	W	W
E15	R	R	R	R	W	W	W	W
E16	B	B	B	B	B	W	W	W
E17	R	B	B	B	B	W	W	W
E18	R	R	B	B	B	W	W	W
E19	R	R	R	B	B	W	W	W
E20	R	R	R	R	B	W	W	W
E21	R	R	R	R	R	W	W	W
E22	B	B	B	B	B	B	W	W
E23	R	B	B	B	B	B	W	W
E24	R	R	B	B	B	B	W	W
E25	R	R	R	B	B	B	W	W
E26	R	R	R	R	B	B	W	W
E27	R	R	R	R	R	B	W	W
E28	R	R	R	R	R	R	W	W
E29	B	B	B	B	B	B	B	W
E30	R	B	B	B	B	B	B	W
E31	R	R	B	B	B	B	B	W
E32	R	R	R	B	B	B	B	W
E33	R	R	R	R	B	B	B	W
E34	R	R	R	R	R	B	B	W
E35	R	R	R	R	R	R	B	W
E36	R	R	R	R	R	R	R	W
E37	B	B	B	B	B	B	B	B
E38	R	B	B	B	B	B	B	B
E39	R	R	B	B	B	B	B	B
E40	R	R	R	B	B	B	B	B
E41	R	R	R	R	B	B	B	B
E42	R	R	R	R	R	B	B	B
E43	R	R	R	R	R	R	B	B
E44	R	R	R	R	R	R	R	B
E45	R	R	R	R	R	R	R	R

© 2022 Glenair, Inc • 1211 Air Way, Glendale, CA 91201 • 818-247-6000 • www.glenair.com • U.S. CAGE code 06324 • SuperNine® Catalog
Dimensions in Inches (millimeters) are subject to change without notice.

00, CM, CS, HM, HS - WALL MOUNT RECEPTACLES

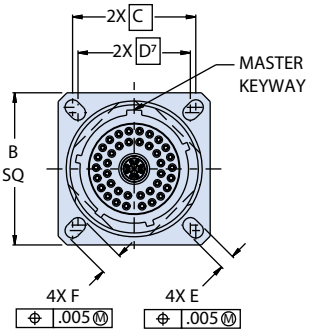

00 - WALL MOUNT RECEPTACLE
WITH SLOTTED HOLES

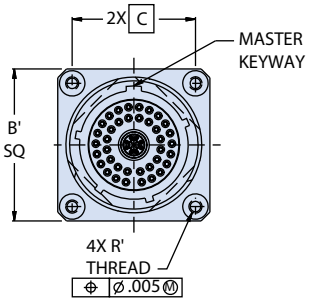

CM - WALL MOUNT RECEPTACLE
WITH METRIC CLINCH NUTS

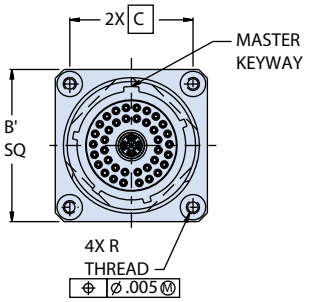

CS - WALL MOUNT RECEPTACLE
WITH STANDARD CLINCH NUTS (SEE TABLE IV)

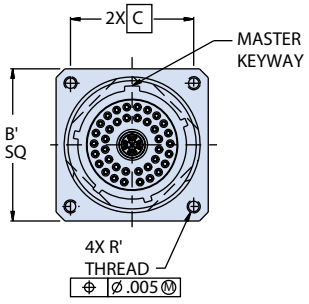

HM - WALL MOUNT RECEPTACLE
WITH METRIC HELICOILS (SEE TABLE IV)

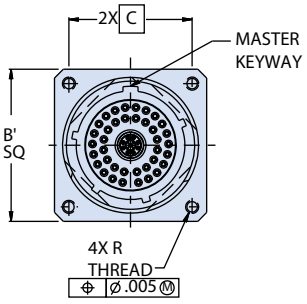

HS - WALL MOUNT RECEPTACLE
WITH STANDARD HELICOIL (SEE TABLE IV)

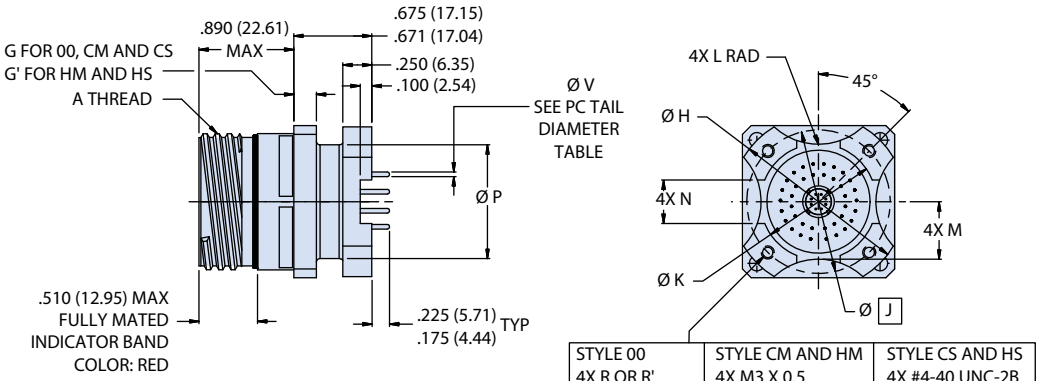

STYLE 00	STYLE CM AND HM	STYLE CS AND HS
4X R OR R' SELF-LOCKING INSERTS	4X M3 X 0.5 SELF-LOCKING INSERTS	4X #4-40 UNC-2B SELF-LOCKING INSERTS

STYLE 00 SHOWN FOR REFERENCE ONLY

© 2022 Glenair, Inc • 1211 Air Way, Glendale, CA 91201 • 818-247-6000 • www.glenair.com • U.S. CAGE code 06324 • SuperNine® Catalog
Dimensions in Inches (millimeters) are subject to change without notice.

SuperNine® High-Speed Series

MIL-DTL-38999 Series III Type Environmental Connectors

233-225 dual flange receptacle with PC tail contacts

Dimensions										
Shell Size Code	Shell Size	A Thread	B Sq	B[1] Sq	C Bsc	D Bsc[8]	E	F	G	G[1]
A	9	.6250 -0.1P-0.3L-TS-2A	.948 (24.08) .925 (23.50)	1.094 (27.79) 1.054 (26.77)	.719 (18.26)	.594 (15.09)		.224 (5.69) .208 (5.28)		
B	11	.7500 -0.1P-0.3L-TS-2A	1.043 (26.49) 1.019 (25.88)	1.187 (30.15) 1.147 (29.13)	.812 (20.62)	.719 (18.26)		.202 (5.13) .186 (4.72)		
C	13	.8750 -0.1P-0.3L-TS-2A	1.137 (28.88) 1.114 (28.30)	1.281 (32.54) 1.241 (31.52)	.906 (23.01)	.812 (20.62)			.122 (3.10) .083 (2.11)	
D	15	1.0000-0.1P-0.3L-TS-2A	1.232 (31.29) 1.208 (30.68)	1.344 (34.14) 1.304 (33.12)	.969 (24.61)	.906 (23.01)	.136 (3.45) .120 (3.05)	.181 (4.60) .165 (4.19)		.179 (4.55) .140 (3.56)
E	17	1.1875 -0.1P-0.3L-TS-2A	1.299 (32.99) 1.323 (33.60)	1.437 (36.50) 1.397 (35.48)	1.062 (26.97)	.969 (24.61)				
F	19	1.2500 -0.1P-0.3L-TS-2A	1.449 (36.80) 1.425 (36.20)	1.531 (38.89) 1.491 (37.87)	1.156 (29.36)	1.062 (26.97)		.202 (5.13) .186 (4.72)		
G	21	1.3750 -0.1P-0.3L-TS-2A	1.575 (40.00) 1.551 (39.40)	1.625 (41.28) 1.585 (40.26)	1.250 (31.75)	1.156 (29.36)			.153 (3.89) .114 (2.90)	
H	23	1.5000 -0.1P-0.3L-TS-2A	1.701 (43.21) 1.677 (42.60)	1.750 (44.45) 1.710 (43.43)	1.375 (34.92)	1.250 (31.75)	.162 (4.11) .146 (3.71)	.250 (6.35) .234 (5.94)		.190 (4.83) .170 (4.32)
J	25	1.6250 -0.1P-0.3L-TS-2A	1.823 (46.30) 1.799 (45.69)	1.875 (47.63) 1.835 (46.61)	1.500 (38.10)	1.375 (34.92)				

Dimensions (Continued)										
Shell Size Code	Shell Size	ØH ±.005 (0.13)	ØJ Bsc	ØK ±.005 (0.13)	L Rad ±.020 (0.51)	M ±.020 (0.51)	N ±.010 (0.25)	ØP ±.005 (0.13)	R Thd	R[1] Thd
A	9	1.016 (25.81)	.752 (19.10)	.532 (13.51)	.225 (5.72)	.275 (6.99)	.225 (5.72)	.535 (13.59)	.112-40 UNC	M3X0.5
B	11	1.062 (26.97)	.850 (21.59)	.595 (15.11)	.250 (6.35)	.290 (7.37)	.250 (6.35)	.560 (14.22)		
C	13	1.250 (31.75)	.994 (25.25)	.720 (18.29)	.375 (9.52)	.370 (9.40)	.250 (6.35)	.700 (17.78)		
D	15	1.375 (34.92)	1.119 (28.42)	.843 (21.41)	.438 (11.13)	.440 (11.18)	.325 (8.25)	.857 (21.77)		
E	17	1.500 (38.10)	1.237 (31.42)	1.000 (25.40)	.562 (14.27)	.495 (12.57)	.375 (9.52)	.980 (24.89)		
F	19	1.625 (41.28)	1.379 (35.03)	1.125 (28.58)	.875 (22.23)	.540 (13.72)	.500 (12.70)	1.060 (26.92)		
G	21	1.750 (44.45)	1.489 (37.82)	1.240 (31.50)	1.170 (29.72)	.625 (15.88)	.562 (14.27)	1.210 (30.73)		
H	23	1.875 (47.63)	1.619 (41.12)	1.328 (33.73)	1.250 (31.75)	.660 (16.76)	.688 (17.48)	1.310 (33.27)	.138-32 UNC	M4X0.7
J	25	2.000 (50.80)	1.744 (44.30)	1.453 (36.91)	1.375 (34.92)	.740 (18.80)	.750 (19.05)	1.460 (37.08)		

Wall Mount, Mounting Hole Dimensions					
Shell Size Code	Shell Size	ØS Min	ØS' Min[8]	ØT Holes	U Bsc
A	9	.656 (16.66)	.516 (13.11)	.133 (3.38) .123 (3.12)	.719 (18.26)
B	11	.796 (20.22)	.625 (15.88)		.812 (20.62)
C	13	.922 (23.42)	.750 (19.05)		.906 (23.01)
D	15	1.047 (26.59)	.906 (23.01)		.969 (24.61)
E	17	1.219 (30.96)	1.016 (25.81)		1.062 (26.97)
F	19	1.297 (32.94)	1.141 (28.98)		1.156 (29.36)
G	21	1.422 (36.12)	1.266 (32.16)		1.250 (31.75)
H	23	1.547 (39.29)	1.375 (34.92)	.159 (4.04) .149 (3.78)	1.375 (34.92)
J	25	1.672 (42.47)	1.484 (37.69)	.155 (3.94) .145 (3.68)	1.500 (38.10)

RECOMMENDED MOUNTING HOLES
FOR WALL MOUNT RECEPTACLES

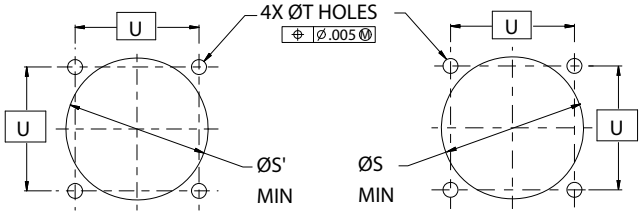

FRONT PANEL MOUNT

BACK PANEL MOUNT

© 2022 Glenair, Inc • 1211 Air Way, Glendale, CA 91201 • 818-247-6000 • www.glenair.com • U.S. CAGE code 06324 • SuperNine® Catalog

Dimensions in Inches (millimeters) are subject to change without notice.

SuperNine® High-Speed Series

MIL-DTL-38999 Series III Type Environmental Connectors

233-225 dual flange receptacle with PC tail contacts

07 AND 17 - JAM-NUT MOUNT RECEPTACLE

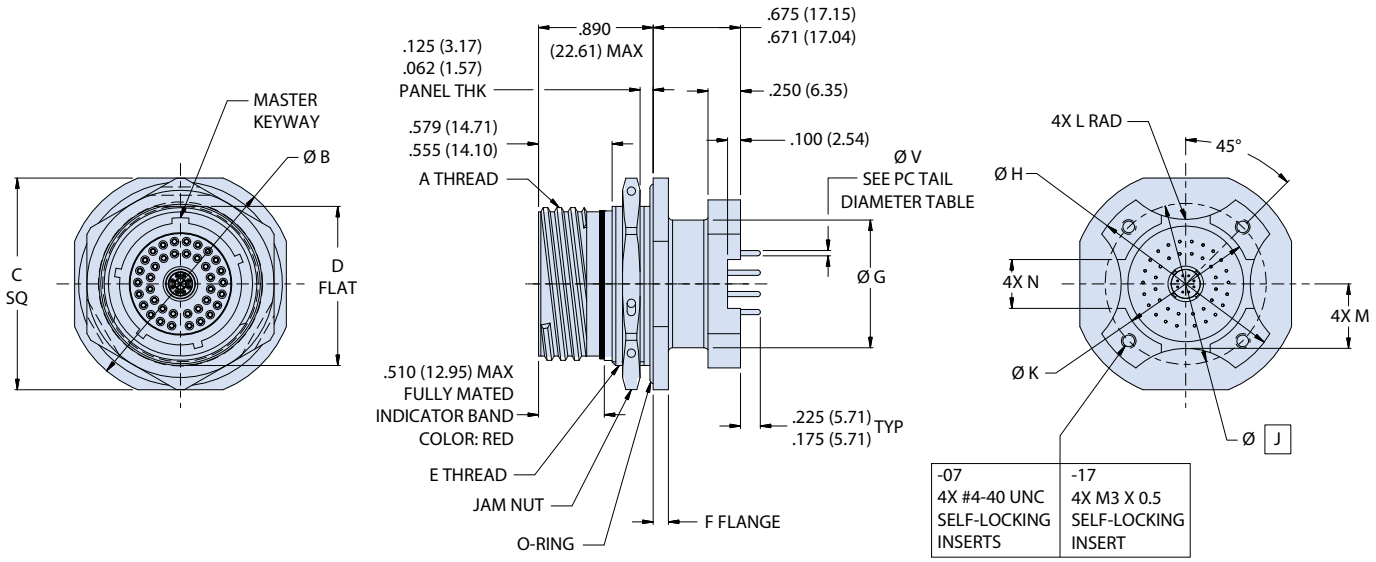

Jam-Nut Mount, Mounting Hole Dimensions							
Shell Size Code	Shell Size	ØJ	ØK Flat	Shell Size Code	Shell Size	ØJ	ØK Flat
A	9	.703 (17.86) .693 (17.60)	.661 (16.79) .654 (16.61)	E	17	1.270 (32.26) 1.260 (32.00)	1.210 (30.73) 1.200 (30.48)
B	11	.835 (21.21) .825 (20.96)	.771 (19.58) .761 (19.33)	F	19	1.395 (35.43) 1.385 (35.18)	1.335 (33.91) 1.325 (33.65)
C	13	1.020 (25.91) 1.010 (25.65)	.955 (24.26) .945 (24.00)	G	21	1.520 (38.61) 1.510 (38.35)	1.460 (37.08) 1.450 (36.83)
D	15	1.145 (29.08) 1.135 (28.83)	1.085 (27.56) 1.075 (27.30)	H	23	1.645 (41.78) 1.635 (41.53)	1.585 (40.26) 1.575 (40.00)
				J	25	1.770 (44.96) 1.760 (44.70)	1.710 (43.43) 1.700 (43.18)

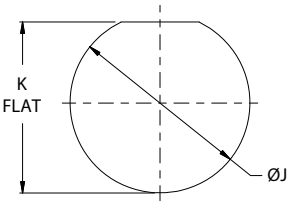

RECOMMENDED PANEL CUT-OUT

RECOMMENDED PCB FOOTPRINT FOR WALL MOUNT AND JAM-NUT RECEPTACLES

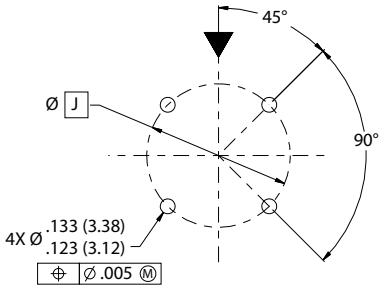

RECOMMENDED PCB
MOUNTING HOLE LOCATIONS

© 2022 Glenair, Inc • 1211 Air Way, Glendale, CA 91201 • 818-247-6000 • www.glenair.com • U.S. CAGE code 06324 • SuperNine® Catalog
Dimensions in Inches (millimeters) are subject to change without notice.

Dimensions							
Shell Size Code	Shell Size	A Thread -0.1P-0.3L-TS-2A	ØB	C Sq	D Flat	E Thread ISO Metric	F
A	9	.6250	1.200 (30.48) 1.178 (29.92)	1.078 (27.38) 1.048 (26.62)	0.654 (16.61) 0.645 (16.38)	M17 X 1.0-6g 0.100R	
B	11	.7500	1.386 (35.20) 1.362 (34.59)	1.268 (32.21) 1.236 (31.39)	0.755 (19.18) 0.745 (18.92)	M20 X 1.0-6g 0.100R	
C	13	.8750	1.512 (38.40) 1.488 (37.80)	1.390 (35.31) 1.358 (34.49)	0.942 (23.93) 0.932 (23.67)	M25 X 1.0-6g 0.100R	.122 .083
D	15	1.0000	1.638 (41.61) 1.614 (41.00)	1.516 (38.51) 1.484 (37.69)	1.066 (27.08) 1.056 (26.82)	M28 X 1.0-6g 0.100R	
E	17	1.1875	1.764 (44.81) 1.740 (44.20)	1.642 (41.71) 1.610 (40.89)	1.191 (30.25) 1.181 (30.00)	M32 X 1.0-6g 0.100R*	
F	19	1.2500	1.949 (49.50) 1.925 (48.90)	1.827 (46.41) 1.795 (45.59)	1.316 (33.43) 1.306 (33.17)	M35 X 1.0-6g 0.100R	
G	21	1.3750	2.075 (52.71) 2.051 (52.10)	1.953 (49.61) 1.921 (48.79)	1.441 (36.60) 1.431 (36.35)	M38 X 1.0-6g 0.100R	.153
H	23	1.5000	2.201 (55.91) 2.177 (55.30)	2.079 (52.81) 2.047 (51.99)	1.566 (39.78) 1.556 (39.52)	M41 X 1.0-6g 0.100R	.114
J	25	1.6250	2.323 (59.00) 2.299 (58.39)	2.205 (56.01) 2.173 (55.19)	1.691 (42.95) 1.681 (42.70)	M44 X 1.0-6g 0.100R	

* Modified major diameter 31.95 31.80 (1.257 - 1.252)

Dimensions								
Shell Size Code	Shell Size	Ø G ±.005 (0.00)	ØH ±.005 (0.00)	ØJ Bsc	ØK ±.005 (0.00)	L Rad ±.020 (0.00)	M±.020 (0.00)	N ±.010 (0.00)
A	9	.535 (13.59)	1.016 (25.81)	.752 (19.10)	.532 (13.51)	.225 (5.72)	.275 (6.99)	.225 (5.72)
B	11	.560 (14.22)	1.062 (26.97)	.850 (21.59)	.595 (15.11)	.250 (6.35)	.290 (7.37)	.250 (6.35)
C	13	.700 (17.78)	1.250 (31.75)	.994 (25.25)	.720 (18.29)	.375 (9.52)	.370 (9.40)	.250 (6.35)
D	15	.857 (21.77)	1.375 (34.92)	1.119 (28.42)	.843 (21.41)	.438 (11.13)	.440 (11.18)	.325 (8.25)
E	17	.980 (24.89)	1.500 (38.10)	1.237 (31.42)	1.000 (25.40)	.562 (14.27)	.495 (12.57)	.375 (9.52)
F	19	1.060 (26.92)	1.625 (41.28)	1.379 (35.03)	1.125 (28.58)	.875 (22.23)	.540 (13.72)	.500 (12.70)
G	21	1.210 (30.73)	1.750 (44.45)	1.489 (37.82)	1.240 (31.50)	1.170 (29.72)	.625 (15.88)	.562 (14.27)
H	23	1.310 (33.27)	1.875 (47.63)	1.619 (41.12)	1.328 (33.73)	1.250 (31.75)	.660 (16.76)	.688 (17.48)
J	25	1.460 (37.08)	2.000 (50.80)	1.744 (44.30)	1.453 (36.91)	1.375 (34.92)	.740 (18.80)	.750 (19.05)

© 2022 Glenair, Inc • 1211 Air Way, Glendale, CA 91201 • 818-247-6000 • www.glenair.com • U.S. CAGE code 06324 • SuperNine® Catalog
Dimensions in Inches (millimeters) are subject to change without notice.

ADVANCED PERFORMANCE

SuperNine® High-Speed Series

MIL-DTL-38999 Series III Type Environmental Connectors

233-227 Bulkhead feed-thru connectors

Part Number Development

Sample Part Number	233-227	–00	NF	17	E	–	2	P	N	S	N	01
Series / Basic Part No.	SuperNine® High-Speed bulkhead feed-thru											
Connector Style	**-00** = Receptacle, Wall-Mount with Slotted Holes **-07** = Jam Nut Mount Receptacle **-CM** = Receptacle, Wall Mount with Metric Clinch Nuts **-CS** = Receptacle, Wall Mount with Standard Clinch Nuts **-HM** = Receptacle, Wall Mount with Metric Helicoils **-HS** = Receptacle, Wall Mount with Standard Helicoils											
Material/Finish	**NF** = Cadmium Olive Drab **MT** = Nickel PTFE **ME** = Electroless Nickel **ZR** = Black Zinc Nickel											
Shell Size	**9**, **11**, **13**, **17**, **19**, **21**, **23**, **25**											
Contact Type	**C** = Coax **C1** = Coax, 75 ohm **D** = Differential Twinax **E** = El Ochito[7] **Q** = Quadrax **P** = Power **T** = Triax/Concentric Twinax See Table I											
Ground Option	**G** = Common Ground[7] **–** = None											
Insert Arrangement	Per MIL-STD-1560, see page C-5 and C-6											
Contact Style (Panel Side)	**P** = Pin, Gold, 500 Cycles **S** = Socket, Gold, 500 Cycles (See note 8 and 9)											
Alternate Polarization* (Panel Side)	**A**, **B**, **C**, **D**, **E**, **N** = Normal (IAW MIL-DTL-38999 Series III)											
Contact Style (Flange Side)	**P** = Pin, Gold, 500 Cycles **S** = Socket, Gold, 500 Cycles (See note 8 and 9)											
Alternate Polarization* (Flange Side)	**A**, **B**, **C**, **D**, **E**, **N** = Normal (IAW MIL-DTL-38999 Series III)											
Panel Accommodation	See Table III											

***Refer to Section A for alternate key polarization options and recommended panel cutout dimensions**

Table I: Contact Type

Sym	Description	Glenair P/N	Wire Type	Grommet Follower	Application Notes
C	Size 16, contact for coax cable, per M39029/76 & /77;	Pin: 852-008-16-424 Skt: 852-009-16-428	RG174, RG316, RG179	N/A	Analog radio frequency or microwave applications
	Size 12, contact for coax cable, per M39029/102 & /103	Pin: 852-004-12-558 Skt: 852-005-12-559	RG174, RG316, RG179	N/A	
	Size 8, contact for coax cable, per M39029/59 & /60	Pin: 852-007-08-367 Skt: 852-006-08-366	M17 /95-RG180	859-042-02	
C1	Size 8, contact for 75 ohm coax cable	Pin: 852-056-01 Skt: 852-057-01	V73263, V75268, V76261	859-042-01	aerospace-grade digital video
D	Size 8, diff. twinax contact for 24 AWG twinax cable	Pin: 853-014-05 Skt: 853-013-05	M17 /176-00002	859-042-01	1553 databus / differential signal
E**	Size 8, El Ochito® contact for 26 AWG	White Pin: 858-003-02 Skt: 858-004-02	963-003-26 963-033-26	687-643-8-2	1G/10G Base-T Ethernet (white)
	Size 8, El Ochito® contact for 24/26-30 AWG Cable	**Blue** **Pin: 858-028-02** **Skt: 858-029-02**	963-110 & 963-118	687-643-8-2	USB 3.0 (Blue)
	Size 8, El Ochito® contact for 26-30 AWG Cable	**Red** **Pin: 858-030-02** **Skt: 858-031-02**	963-033-26	687-643-8-2	SATA 3.0 General High Speed (red)
Q	Size 8, contact for 24 AWG Quadrax	Pin: 854-001-02 Skt: 854-002-02	963-020	859-042-02	10/100Base-T ethernet
P	Size 8, power contact for 8 AWG	Pin: 850-014 Skt: 850-013	M22759/11 or equivalent	859-042-03	Power
T	Size 8, triax/concentric twinax for twinax cable	Pin: 853-003-08-625 Skt: 853-004-08-628	M17 /176-00002	859-042-01	1553 Databus

Table III: Panel Accommodation

Sym	Panel Thickness	J Max
01	.125 (3.18) .062 (1.57)	1.70 (43.18)
02	.250 (6.35) .062 (1.57)	1.83 (46.48)
03	.500 (12.70) .062 (1.57)	2.08 (52.83)

FIGURE 2: REFERENCE ORIENTATION OF INNER PINS RELATIVE TO CONNECTOR MAIN KEY/ KEYWAY



DIFERENTIAL TWINAX | QUADRAX | EL OCHITO SIZE 8

** See Table II for Contact Positions. See Figure 2 for orientation of inner pins relative to connector main key/ keyway.

© 2022 Glenair, Inc • 1211 Air Way, Glendale, CA 91201 • 818-247-6000 • www.glenair.com • U.S. CAGE code 06324 • SuperNine® Catalog
Dimensions in Inches (millimeters) are subject to change without notice.

Rev. 05.16.23

SuperNine® High-Speed Series

MIL-DTL-38999 Series III Type Environmental Connectors

233-227 Bulkhead feed-thru connectors

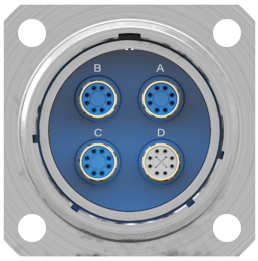

Example Code E7



Example Code E5

NOTES

1. Coax contact mating interfaces shall be in accordance with the following:
   - size #16 per M39029/76 & /77
   - size #12 per M39029/102 & 103
   - size #8, 50 ohm per M39029/59 & 60
   - size #8, 75 ohm per 852-056 and -057
2. See page C-4, figure 2 for reference orientation of the inner pins relative to connector main keyway.
3. Insert arrangement is in accordance with MIL-STD-1560 and figure 1. Contact manufacturer for additional arrangement options
4. Glenair 233-227 feedthru connectors are designed to meet or exceed the applicable mechanical, dimensional, electrical, and environmental requirements of MIL-DTL-38999, D38999/20, and MIL-STD-1560 except as shown and/or noted. Feedthru mates with any QPL manufacturer's MIL-DTL-38999, Series III plug connector, D38999/26, having the same shell size, insert arrangement, polarization, and mating contact.
5. El Ochito mating contact shall be in accordance with El Ochito contact configuration table on C-12. For optimal El Ochito performance, see Glenair application note AN0002.
6. Front panel mount only.
7. Ground plane option only available for insert arrangements where all contacts are shielded type.
8. Power to a given contact on one end will result in power to a contact directly opposite, regardless of identification letter
9. For pin/pin and socket/socket, symmetrical layout only. Consult factory for available insert arrangements
10. Material/finish:
    - Shell: see part number development
    - Contacts: copper alloy / gold plated
    - Insulators: high grade rigid dielectric / N.A.
    - Seals: fluorosilicone blend / N.A.

El Ochito Contact Configuration								
SYM	CAVITY A	CAVITY B	CAVITY C	CAVITY D	CAVITY E	CAVITY F	CAVITY G	CAVITY H
E	W	W	W	W	W	W	W	W
E2	B	W	W	W	W	W	W	W
E3	R	W	W	W	W	W	W	W
E4	B	B	W	W	W	W	W	W
E5	R	B	W	W	W	W	W	W
E6	R	R	W	W	W	W	W	W
E7	B	B	B	W	W	W	W	W
E8	R	B	B	W	W	W	W	W
E9	R	R	B	W	W	W	W	W
E10	R	R	R	W	W	W	W	W
E11	B	B	B	B	W	W	W	W
E12	R	B	B	B	W	W	W	W
E13	R	R	B	B	W	W	W	W
E14	R	R	R	B	W	W	W	W
E15	R	R	R	R	W	W	W	W
E16	B	B	B	B	B	W	W	W
E17	R	B	B	B	B	W	W	W
E18	R	R	B	B	B	W	W	W
E19	R	R	R	B	B	W	W	W
E20	R	R	R	R	B	W	W	W
E21	R	R	R	R	R	W	W	W
E22	B	B	B	B	B	B	W	W
E23	R	B	B	B	B	B	W	W
E24	R	R	B	B	B	B	W	W
E25	R	R	R	B	B	B	W	W
E26	R	R	R	R	B	B	W	W
E27	R	R	R	R	R	B	W	W
E28	R	R	R	R	R	R	W	W
E29	B	B	B	B	B	B	B	W
E30	R	B	B	B	B	B	B	W
E31	R	R	B	B	B	B	B	W
E32	R	R	R	B	B	B	B	W
E33	R	R	R	R	B	B	B	W
E34	R	R	R	R	R	B	B	W
E35	R	R	R	R	R	R	B	W
E36	R	R	R	R	R	R	R	W
E37	B	B	B	B	B	B	B	B
E38	R	B	B	B	B	B	B	B
E39	R	R	B	B	B	B	B	B
E40	R	R	R	B	B	B	B	B
E41	R	R	R	R	B	B	B	B
E42	R	R	R	R	R	B	B	B
E43	R	R	R	R	R	R	B	B
E44	R	R	R	R	R	R	R	B
E45	R	R	R	R	R	R	R	R

© 2022 Glenair, Inc • 1211 Air Way, Glendale, CA 91201 • 818-247-6000 • www.glenair.com • U.S. CAGE code 06324 • SuperNine® Catalog
Dimensions in Inches (millimeters) are subject to change without notice.

Rev. 05.16.23

SuperNine® High-Speed Series

MIL-DTL-38999 Series III Type Environmental Connectors

233-227 Bulkhead feed-thru connectors

Dimensions												
Shell Size Code	Shell Size	A Thread	B Sq	B' Sq	C Bsc	D Bsc (See Note 8)	E	F	G	G'	H Thd	H' Thd
A	9	.6250 -0.1P-0.3L-TS-2A	.948 (24.08) .925 (23.50)	1.094 (27.79) 1.054 (26.77)	.719 (18.26)	.594 (15.09)	.136 (3.45) .120 (3.05)	.224 (5.69) .208 (5.28)	.122 (3.10) .083 (2.11)	.179 (4.55) .140 (3.56)	.112-40 UNC	M3X0.5
B	11	.7500 -0.1P-0.3L-TS-2A	1.043 (26.49) 1.019 (25.88)	1.187 (30.15) 1.147 (29.13)	.812 (20.62)	.719 (18.26)		.202 (5.13) .186 (4.72)				
C	13	.8750 -0.1P-0.3L-TS-2A	1.137 (28.88) 1.114 (28.30)	1.281 (32.54) 1.241 (31.52)	.906 (23.01)	.812 (20.62)						
D	15	1.0000-0.1P-0.3L-TS-2A	1.232 (31.29) 1.208 (30.68)	1.344 (34.14) 1.304 (33.12)	.969 (24.61)	.906 (23.01)		.181 (4.60) .165 (4.19)				
E	17	1.1875 -0.1P-0.3L-TS-2A	1.299 (32.99) 1.323 (33.60)	1.437 (36.50) 1.397 (35.48)	1.062 (26.97)	.969 (24.61)						
F	19	1.2500 -0.1P-0.3L-TS-2A	1.449 (36.80) 1.425 (36.20)	1.531 (38.89) 1.491 (37.87)	1.156 (29.36)	1.062 (26.97)		.202 (5.13) .186 (4.72)	.153 (3.89)			
G	21	1.3750 -0.1P-0.3L-TS-2A	1.575 (40.00) 1.551 (39.40)	1.625 (41.28) 1.585 (40.26)	1.250 (31.75)	1.156 (29.36)						
H	23	1.5000 -0.1P-0.3L-TS-2A	1.701 (43.21) 1.677 (42.60)	1.750 (44.45) 1.710 (43.43)	1.375 (34.92)	1.250 (31.75)	.162 (4.11)	.250 (6.35)	.114 (2.90)	.190 (4.83) .170 (4.32)	.138-32 UNC	M4X0.7
J	25	1.6250 -0.1P-0.3L-TS-2A	1.823 (46.30) 1.799 (45.69)	1.875 (47.63) 1.835 (46.61)	1.500 (38.10)	1.375 (34.92)	.146 (3.71)	.234 (5.94)				

Wall Mount Mounting Hole Dimensions				
Shell Size Code	Shell Size	ØL Min	ØM Holes	N Bsc
A	9	.656 (16.66)	.133 (3.38) .123 (3.12)	.719 (18.26)
B	11	.796 (20.22)		.812 (20.62)
C	13	.922 (23.42)		.906 (23.01)
D	15	1.047 (26.59)		.969 (24.61)
E	17	1.219 (30.96)		1.062 (26.97)
F	19	1.297 (32.94)		1.156 (29.36)
G	21	1.422 (36.12)		1.250 (31.75)
H	23	1.547 (39.29)	.159 (4.04) .149 (3.78)	1.375 (34.92)
J	25	1.672 (42.47)	.155 (3.94) .145 (3.68)	1.500 (38.10)

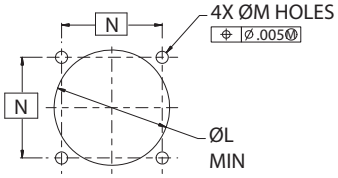

FRONT and BACK
PANEL MOUNT

RECOMMENDED MOUNTING HOLES
FOR WALL MOUNT RECEPTACLES

© 2022 Glenair, Inc • 1211 Air Way, Glendale, CA 91201 • 818-247-6000 • www.glenair.com • U.S. CAGE code 06324 • SuperNine® Catalog
Dimensions in Inches (millimeters) are subject to change without notice.

SuperNine® High-Speed Series

MIL-DTL-38999 Series III Type Environmental Connectors

233-227 Bulkhead feed-thru connectors

00 - WALL-MOUNT RECEPTACLE WITH SLOTTED HOLES

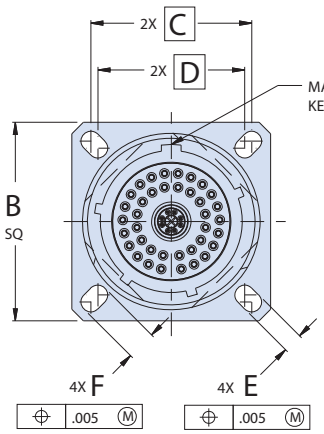

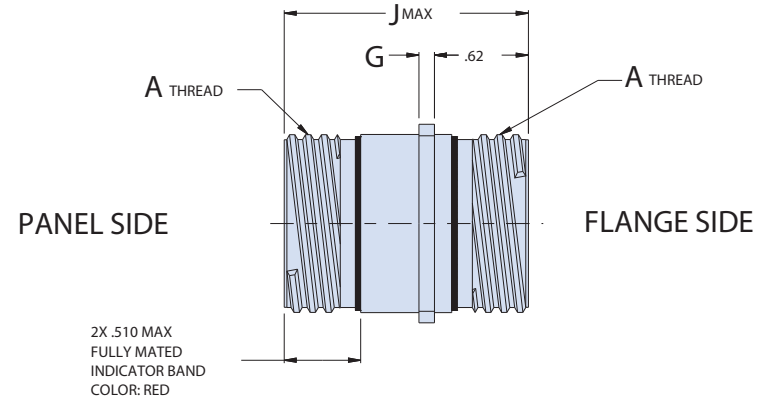

CM - WALL-MOUNT RECEPTACLE WITH METRIC CLINCH NUTS

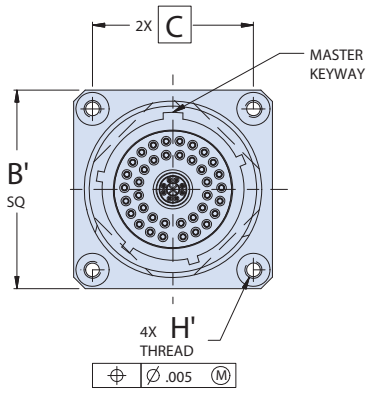

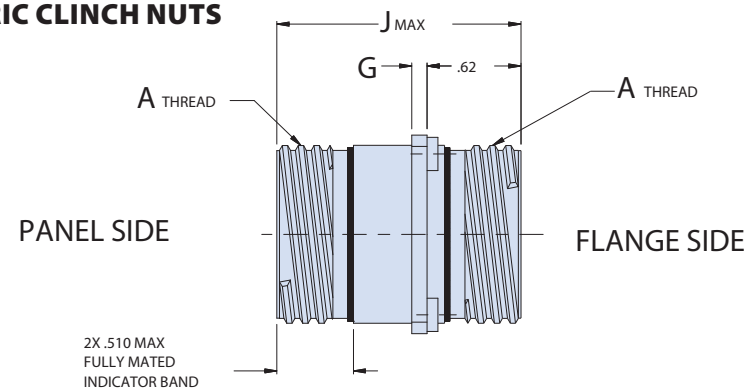

CS - WALL-MOUNT RECEPTACLE WITH STANDARD CLINCH NUTS

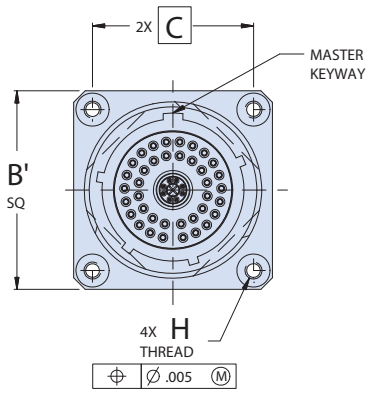

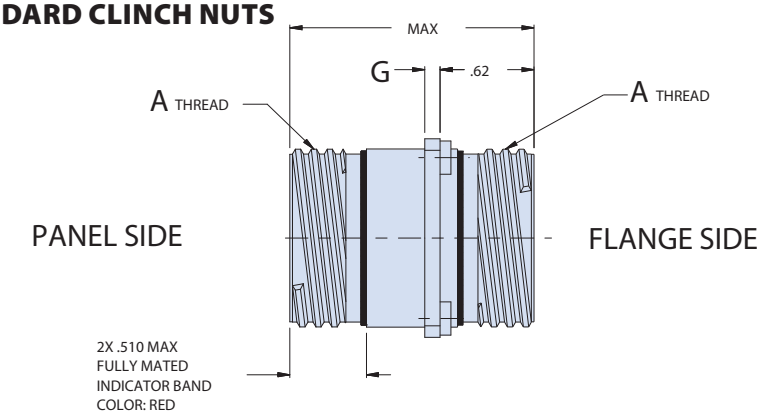

© 2022 Glenair, Inc • 1211 Air Way, Glendale, CA 91201 • 818-247-6000 • www.glenair.com • U.S. CAGE code 06324 • SuperNine® Catalog
Dimensions in Inches (millimeters) are subject to change without notice.

HM - WALL-MOUNT RECEPTACLE WITH METRIC HELICOILS

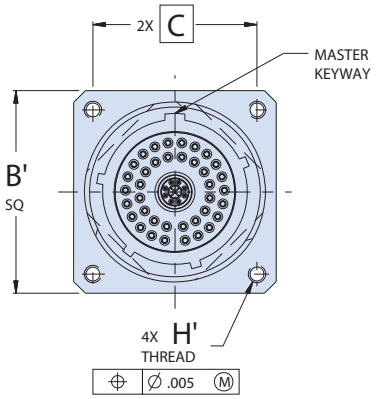

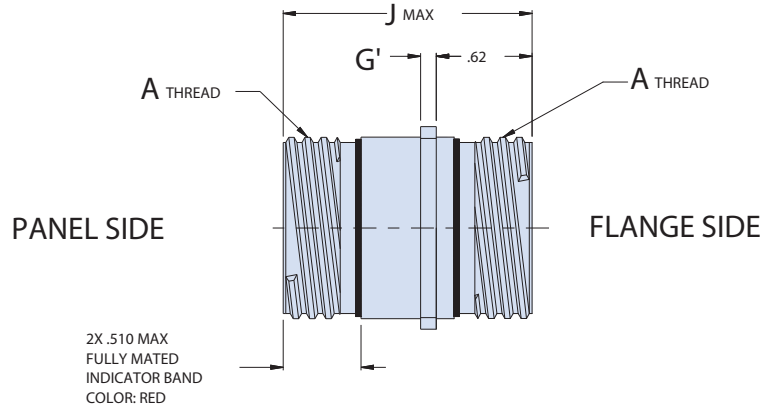

HS - WALL-MOUNT RECEPTACLE WITH STANDARD HELICOILS

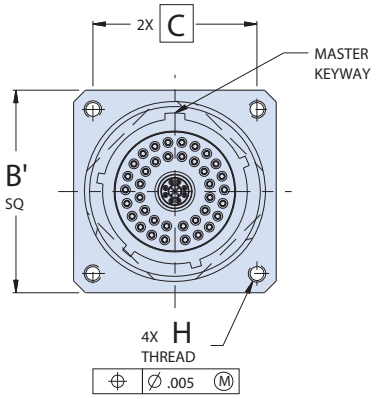

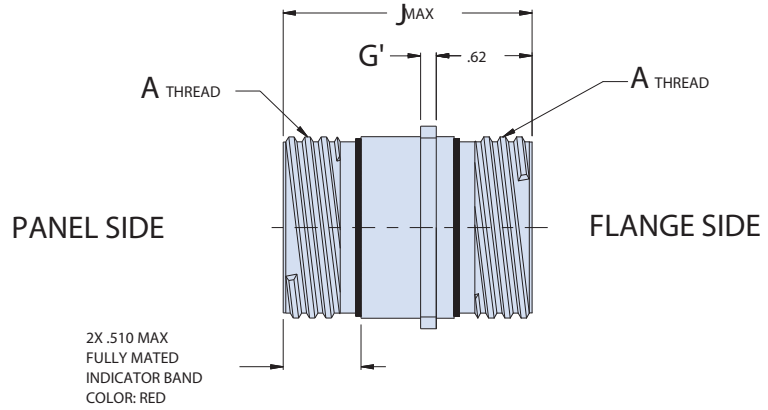

07 -

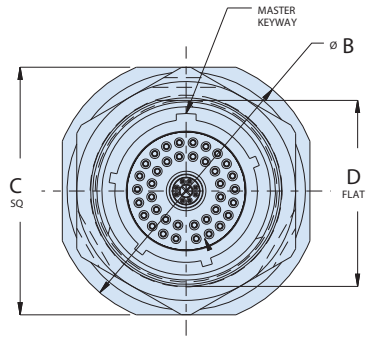

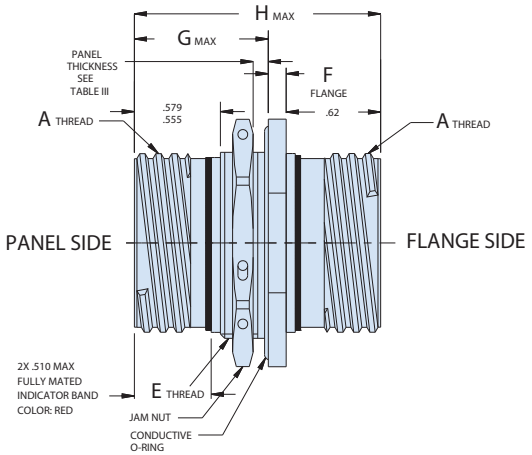

© 2022 Glenair, Inc • 1211 Air Way, Glendale, CA 91201 • 818-247-6000 • www.glenair.com • U.S. CAGE code 06324 • SuperNine® Catalog
Dimensions in Inches (millimeters) are subject to change without notice.

SuperNine® High-Speed Series

MIL-DTL-38999 Series III Type Environmental Connectors

233-228 Sav-Con® Connector Saver

Part Number Development										
Sample Part Number	**233-228**	**-NF**	**17**	**E**	**–**	**2**	**P**	**N**	**S**	**N**
Series / Basic Part No.	SuperNine® High-Speed Sav-Con® Connector Saver									
Material/Finish	**-NF** = Cadmium Olive Drab **-ME** = Electroless Nickel **-MT** = Nickel PTFE **-ZR** = Black Zinc Nickel									
Shell Size	**9**, **11**, **13**, **17**, **19**, **21**, **23**, **25**									
Contact Type (Table I)	**C** = Coax, 50 ohm **D** = Differential Twinax **E** = El Ochito[5] **Q** = Quadrax (100 ohm) **C1** = Coax, 75 ohm **P** = Power **T** = Triax/Concentric Twinax (per /90 and /91) **Omit** = Contact interface IAW MIL-STD-1560									
Ground Option	**G** = Common Ground **–** = None									
Insert Arrangement	Per MIL-STD-1560, see page C-5 and C-6									
Contact Style (Plug Side)	**P** = Pin, Gold, 500 Cycles **S** = Socket, Gold, 500 Cycles									
Alternate Polarization* (Plug Side)	**A**, **B**, **C**, **D**, **E**, **N** = Normal (IAW MIL-DTL-38999 Series III)									
Contact Style (Receptacle Side)	**P** = Pin, Gold, 500 Cycles **S** = Socket, Gold, 500 Cycles									
Alternate Polarization* (Flange Side)	**A**, **B**, **C**, **D**, **E**, **N** = Normal (IAW MIL-DTL-38999 Series III)									

***Refer to section A for complete details.** Refer to Space-Grade Guidelines material (IAW NASA EEE INST-002) for outgassing and screening modification codes, on pages 80 and 81. Modification codes may be added directly to the end of any valid part number

Table I: Contact Type

Sym	Description	Glenair P/N	Wire Type	Grommet Follower	Application Notes
C	Size 16, contact for coax cable, per M39029/76 & /77;	Pin: 852-008-16-424 Skt: 852-009-16-428	RG174, RG316, RG179	N/A	Analog radio frequency or microwave applications
	Size 12, contact for coax cable, per M39029/102 & /103	Pin: 852-004-12-558 Skt: 852-005-12-559	RG174, RG316, RG179	N/A	
	Size 8, contact for coax cable, per M39029/59 & /60	Pin: 852-007-08-367 Skt: 852-006-08-366	M17 /95-RG180	859-042-02	
C1	Size 8, contact for 75 ohm coax cable	Pin: 852-056-01 Skt: 852-057-01	V73263, V75268, V76261	859-042-01	aerospace-grade digital video
D	Size 8, differential twinax contact for 24 AWG twinax cable	Pin: 853-014-05 Skt: 853-013-05	M17 /176-00002	859-042-01	1553 databus / differential signal
E*	Size 8, El Ochito® contact for 26 AWG	White Pin: 858-003-02 Skt: 858-004-02	963-003-26 963-033-26	687-643-8-2	1G/10G Base-T Ethernet (white)
	Size 8, El Ochito® contact for 24/26-30 AWG Cable	Blue Pin: 858-028-02 Skt: 858-029-02	963-110 & 963-118	687-643-8-2	USB 3.0 (Blue)
	Size 8, El Ochito® contact for 26-30 AWG Cable	Red Pin: 858-030-02 Skt: 858-031-02	963-033-26	687-643-8-2	SATA 3.0 General High Speed (red)
Q	Size 8, contact for 24 AWG Quadrax	Pin: 854-001-02 Skt: 854-002-02	963-020	859-042-02	10/100Base-T ethernet
P	Size 8, power contact for 8 AWG	Pin: 850-014 Skt: 850-013	M22759/11 or equivalent	859-042-03	Power
T	Size 8, triax/concentric twinax for twinax cable	Pin: 853-003-08-625 Skt: 853-004-08-628	M17 /176-00002	859-042-01	1553 Databus

* See Table II for Contact Positions. See Figure 2 for orientation of inner pins relative to connector main key/keyway.

SuperNine® High-Speed Series

MIL-DTL-38999 Series III Type Environmental Connectors

233-228 Sav-Con® Connector Saver

El Ochito Protocols		
		
WHITE	**BLUE**	**RED**
10GBASE-T	USB 3.0	Multi Gigabit 100 ohm protocols HDMI, SATA, DisplayPort



Example Code E7



Example Code E5

FIGURE 2: REFERENCE ORIENTATION OF INNER PINS RELATIVE TO CONNECTOR MAIN KEY/KEYWAY

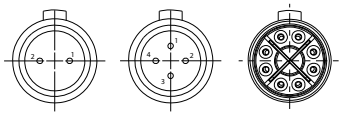

*Refer to Table II, el Ochito contact positions table for orientation.

El Ochito Contact Configuration								
SYM	CAVITY A	CAVITY B	CAVITY C	CAVITY D	CAVITY E	CAVITY F	CAVITY G	CAVITY H
E	W	W	W	W	W	W	W	W
E2	B	W	W	W	W	W	W	W
E3	R	W	W	W	W	W	W	W
E4	B	B	W	W	W	W	W	W
E5	R	B	W	W	W	W	W	W
E6	R	R	W	W	W	W	W	W
E7	B	B	B	W	W	W	W	W
E8	R	B	B	W	W	W	W	W
E9	R	R	B	W	W	W	W	W
E10	R	R	R	W	W	W	W	W
E11	B	B	B	B	W	W	W	W
E12	R	B	B	B	W	W	W	W
E13	R	R	B	B	W	W	W	W
E14	R	R	R	B	W	W	W	W
E15	R	R	R	R	W	W	W	W
E16	B	B	B	B	B	W	W	W
E17	R	B	B	B	B	W	W	W
E18	R	R	B	B	B	W	W	W
E19	R	R	R	B	B	W	W	W
E20	R	R	R	R	B	W	W	W
E21	R	R	R	R	R	W	W	W
E22	B	B	B	B	B	B	W	W
E23	R	B	B	B	B	B	W	W
E24	R	R	B	B	B	B	W	W
E25	R	R	R	B	B	B	W	W
E26	R	R	R	R	B	B	W	W
E27	R	R	R	R	R	B	W	W
E28	R	R	R	R	R	R	W	W
E29	B	B	B	B	B	B	B	W
E30	R	B	B	B	B	B	B	W
E31	R	R	B	B	B	B	B	W
E32	R	R	R	B	B	B	B	W
E33	R	R	R	R	B	B	B	W
E34	R	R	R	R	R	B	B	W
E35	R	R	R	R	R	R	B	W
E36	R	R	R	R	R	R	R	W
E37	B	B	B	B	B	B	B	B
E38	R	B	B	B	B	B	B	B
E39	R	R	B	B	B	B	B	B
E40	R	R	R	B	B	B	B	B
E41	R	R	R	R	B	B	B	B
E42	R	R	R	R	R	B	B	B
E43	R	R	R	R	R	R	B	B
E44	R	R	R	R	R	R	R	B
E45	R	R	R	R	R	R	R	R

© 2022 Glenair, Inc • 1211 Air Way, Glendale, CA 91201 • 818-247-6000 • www.glenair.com • U.S. CAGE code 06324 • SuperNine® Catalog
Dimensions in Inches (millimeters) are subject to change without notice.

SuperNine® High-Speed Series

MIL-DTL-38999 Series III Type Environmental Connectors

233-228 Sav-Con® Connector Saver

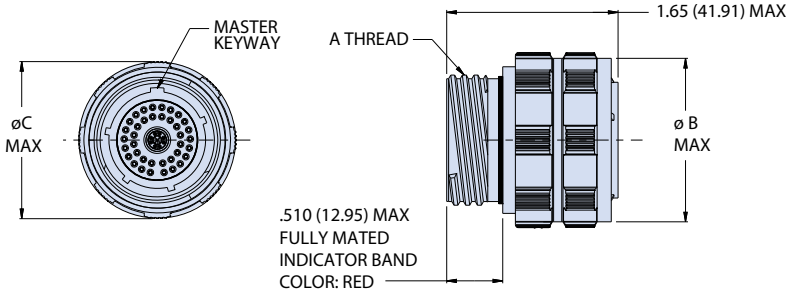

Dimensions				
ShellSize Code	Shell Size	A Thread	ØB Max	ØC Max
A	9	.6250 -0.1P-0.3L-TS-2A	.811 (20.60)	.858 (21.79)
B	11	.7500 -0.1P-0.3L-TS-2A	.929 (23.60)	.984 (24.99)
C	13	.8750 -0.1P-0.3L-TS-2A	1.008 (25.60)	1.157 (29.39)
D	15	1.0000-0.1P-0.3L-TS-2A	1.232 (31.29)	1.280 (32.51)
E	17	1.1875 -0.1P-0.3L-TS-2A	1.358 (34.49)	1.406 (35.71)
F	19	1.2500 -0.1P-0.3L-TS-2A	1.469 (37.31)	1.516 (38.51)
G	21	1.3750 -0.1P-0.3L-TS-2A	1.594 (40.49)	1.642 (41.71)
H	23	1.5000 -0.1P-0.3L-TS-2A	1.720 (43.69)	1.768 (44.91)
J	25	1.6250 -0.1P-0.3L-TS-2A	1.843 (46.81)	1.890 (48.01)

FIGURE 1: INSERT ARRANGEMENTS

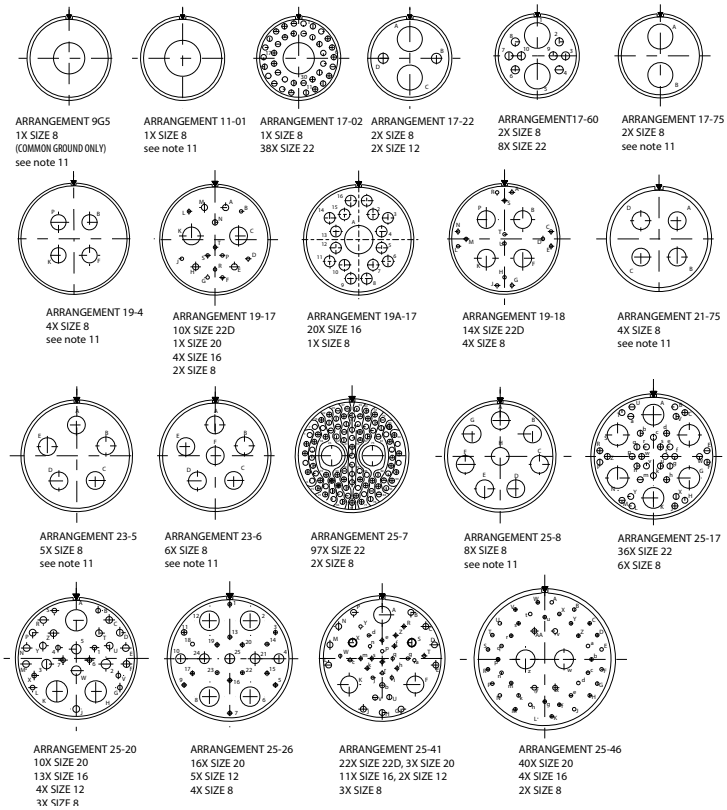

NOTES

1. Coax contact mating interfaces shall be in accordance with the following:
   - size #16 per M39029/76 & /77
   - size #12 per M39029/102 & 103
   - size #8 per M39029/59 & 60
2. See page C-4, figure 2 for reference orientation of the inner pins relative to connector main keyway.
3. Insert arrangement is in accordance with MIL-STD-1560 and figure 1. Contact manufacturer for additional arrangement options
4. Glenair 233-228 connector savers are designed to meet or exceed the applicable mechanical, dimensional, electrical, and environmental requirements of MIL-DTL-38999, D38999/20, D38999/26, and MIL-STD-1560 except as shown and/or noted. Feedthru mates with any QPL manufacturer's MIL-DTL-38999, Series III plugs and receptacles, having the same shell size, insert arrangement, polarization, and mating contact.
5. El Ochito mating contact shall be in accordance with El Ochito contact configuration table on C-12. For optimal El Ochito performance, see Glenair application note AN0002.
6. Front panel mount only.
7. For pin/pin and socket/socekt, symmetrical layout only
8. Power to a given contact on one end will result in power to a contact directly opposite, regardless of identification letter
9. Electrical safety limits must be establisihed by the user. Peak voltage, switching surge, transient, etc. should be used to determine the safety application.
10. Alternate polarization U (universal) is a non-standard/non-mil-spec option which allows for mating to any QPL mfg's MIL-DTL-38999 Sr. III connector with the same size, insert arrangement, and mating contact size. Intended foruse in testing facilities only.
11. Ground plane options available only for shielded contacts.
12. Material/finish:
    - Barrel, Coupling Nut: see part number development
    - Detent Spring: stainless steel, passivated
    - Insulator: high grade rigid dielectric / N.A.
    - Seals: fluorosilicone blend / N.A.
    - Contacts: copper alloy / gold plated

© 2022 Glenair, Inc • 1211 Air Way, Glendale, CA 91201 • 818-247-6000 • www.glenair.com • U.S. CAGE code 06324 • SuperNine® Catalog
Dimensions in Inches (millimeters) are subject to change without notice.

SuperNine® High-Speed Series

MIL-DTL-38999 Series III Type Environmental Connectors

377HS121 Environmental Extender Backshell for #8 El Ochito Cables

Part Number Development							
Sample Part Number	**377**	**H**	**S**	**121**	**NF**	**17-75**	**4**
Series	**377** = Series 37 Aluminum Alloy Backshells						
Connector Designator*	**H** = MIL-DTL-38999 Series III & IV						
Angular Function	**S** = Straight						
Basic No.	**121**						
Material/Finish	See Finish Table						
Shell Size-Insert Arrangement	**11**, **19**, **21**, **25**						
Length	In 1/2 Inch Increments; e.g. 4 = 2 inches; omit for standard 1.50 inches						

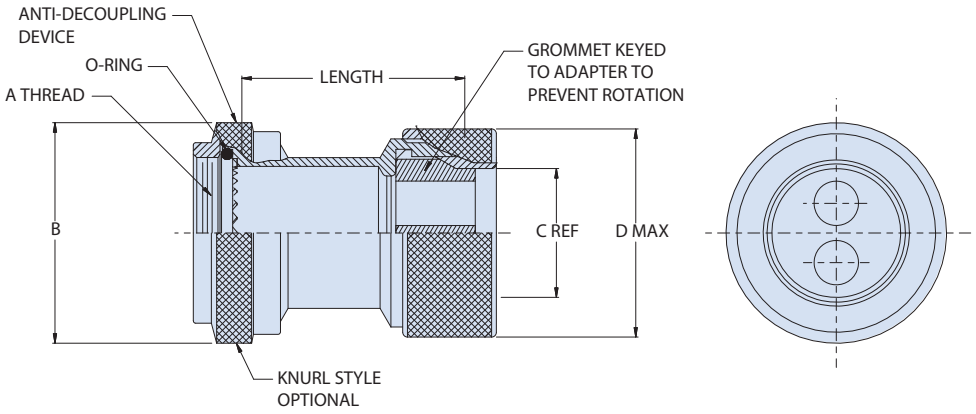

NOTES

1. Glenair 600 series backshell assembly tools are recommended for assembly and installation
2. Material:
   - Adapter, ferrule, coupling nut: see finish table
   - Grommet, O-ring: fluorosilicone/N.A.
   - Anti-rotation device: corrosion resistant material/N.A.

Dimensions				
SHELL SIZE	A THREAD ISO METRIC	B DIA	C REF	D MAX
09	M12 X 1.0 - 6H	0.89 (22.61)	0.562 (14.27)	1.03 (26.16)
11	M15 X 1.0 - 6H	1.01 (25.65)	0.562 (14.27)	1.03 (26.16)
17	M25 X 1.0 - 6H	1.42 (36.07)	0.812 (20.62)	1.34 (34.04)
19	M28 X 1.0 - 6H	1.50 (38.10)	0.812 (20.62)	1.34 (34.04)
21	M31 X 1.0 - 6H	1.67 (42.42)	1.062 (26.97)	1.90 (48.26)
23	M34 X 1.0 - 6H	1.78 (45.21)	1.062 (26.97)	1.90 (48.26)
25	M37 X 1.0 - 6H	1.91 (48.51)	1.312 (33.32)	2.20 (55.88)

Finish Table		
Sym	**Finish Description**	
M	Aluminum alloy	Electroless nickel
MT		Nickel - PTFE
NF		Cad/O.D. over electroless nickel (100 hour salt spray)
ZR		Zinc-nickel, black (1000 hour salt spray)

INSERT ARRANGEMENTS

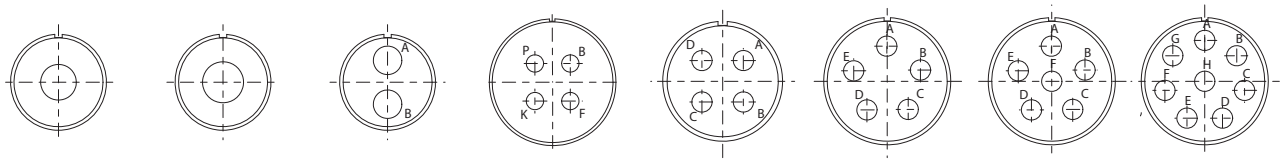

INSERT ARRANGEMENT 09-5 | INSERT ARRANGEMENT 11-1 | INSERT ARRANGEMENT 17-75 | INSERT ARRANGEMENT 19-4 | INSERT ARRANGEMENT 21-75 | INSERT ARRANGEMENT 23-5 | INSERT ARRANGEMENT 23-6 | INSERT ARRANGEMENT 25-8

© 2022 Glenair, Inc • 1211 Air Way, Glendale, CA 91201 • 818-247-6000 • www.glenair.com • U.S. CAGE code 06324 • SuperNine® Catalog
Dimensions in Inches (millimeters) are subject to change without notice.



ENVIRONMENTAL SERIES 23

Space-Grade Guidelines for SuperNine® High-Speed Connectors

Outgassing

Space flight equipment requires low-outgassing components in order to prevent degradation to optics and other sensitive instruments. SuperNine® connectors contain nonmetallic materials such as rubber, plastic, adhesives and potting compounds which can give off gasses when subjected to a vacuum or high heat. Unless the connector is specially processed, the TML and CVCM can exceed allowable limits. The space industry has adopted a standardized test procedure, ASTM E595, to evaulate outgassing properties. The MIL-DTL-38999 specification Class G also details specific TVM and CVCM values in addition to finish specifications. In Glenair's 186T process, for example, connectors and connector materials are heated to 175° C at a vacuum of 5 X 10^{-6} Torr for 48 hours. Items under test are then weighed to calculate the Total Mass Loss (TML), which may not exceed 1.0% of the total initial mass. A collector plate is used to determine the Collected Volatile Condensable Material (CVCM), which may not exceed 0.1% of the total original specimen mass for Class G rated connectors. Glenair is able to offer outgas processing which assures all materials comply with their respective standards.

Note on Connector Material and Finish Options

Some types of metals are prohibited for space flight. "Pure Tin, Cadmium and Zinc shall not be used as a final finish on EEE parts." (NASA EEE-INST-002 Instructions for EEE Parts Selection, Screening, Qualification, and Derating). NASA recommends electroless nickel or gold finish on connector shells and gold finish for contacts.

- **SuperNine® environmental series connectors may be subjected to outgas processing and/or NASA screening IAW MIL-DTL-38999 Class G**
- **Modification codes are a convenient way to specify outgassing / screening requirements per NASA specifications and/or D38999 Class G**
- **Cadmium and silver finish are prohibited in space**
- **Specify electroless nickel finish on connector shells and gold finish on contacts**

ADVANCED PERFORMANCE

SuperNine® High-Speed Series

MIL-DTL-38999 Series III Type Environmental Connectors

Class G and NASA space-grade guidelines

NASA and Class G Screening

The MIL-DTL-38999 specification defines TML and CVCM values for Class G space flight. Glenair modification code 186T assures parts are outgassed to meet the Class G requirements for outgassing. Additionally, NASA recommends that connectors for space flight be specially screened. NASA EEE-INST-002 instructions for EEE parts selection, screening, qualification, and derating contains three levels of screening for space-grade components. These outgassing and screening modification codes are listed at right. To add a modification code append code to end of part number: *253-016-00ME25-35PNMS-**429C***.

- **"Mission critical" connectors for space flight should undergo rigorous 100% final inspection**
- **Modification codes are available to invoke special screening for both MIL-DTL-38999 and NASA applications**
- **Outgassing properties of materials used in Glenair SuperNine® connectors are detailed in the table below**

Screening Level and Available Outgassing Modification Codes				
Screening Level	Screening Only	48 Hour Oven Bake 175° C	Thermal Vacuum Outgassing (10^{-6} Torr)	
			24 Hour 125° C	48 Hour 175° C
NASA, Level 1 Highest Reliability	429B	429J	429C	
NASA, Level 2 High Reliability	429	429K	429A	429AA
NASA, Level 3 Standard Reliability	Use Standard Part Number		429L	
38999, Class G or H (Group A and B inspection, no screening)				186T

Table II: NASA EEE-INST-02, Table 2A Screening Levels			
Inspection	Level 1	Level 2	Level 3
Visual	100%	100%	100%
Mechanical	2(0)	2(0)	
Dielectric Withstanding Voltage	2(0)	2(0)	
Insulation Resistance	2(0)	2(0)	
Contact Engagement & Separation Force	2(0)		
Hermeticity (Sealed Receptacles Only)	100%	100%	
Coupling Force	2(0)		

Required inspection quantity shown. Number in parenthesis indicates acceptance of failures allowed for all quantities inspected.

Outgassing Properties of Materials Used in MIL-DTL-38999 Type SuperNine® Connectors				
Component	Material	TML %	CVCM %	Test Reference
Front and Rear Insulator	Epiall 1908	0.84	0.0	NASA Test # GSC15435 (48 hours at 180°C)
Rear Grommet, Interfacial Seal, Peripheral Seal, and Special Auxiliary Seals	Blended fluorosilicone/silicone elastomer	0.04	0.0	Glenair test
Front-To-Rear Insulator Bonding Material	Eccobond 104 A/B	0.52	0.08	Emerson & Cuming Data Sheet
Insulator-to-Rubber Bonding Material	RTV, per MIL-A-46146	<1.0	<0.1	Glenair Test
White Epoxy Ink for Silk-screening	Markem 7224 White	0.49	0.03	NASA Test #GSC19899

MIL-DTL-38999 Type SuperNine® Connector Materials Approved for Space Flight		
Component	Material	Notes
Shells, Coupling Nuts, Jam Nuts	Aluminum alloy	Approved for Space Flight
Rigid Insulators	Glass reinforced thermoset plastic, Epiall 1908	Approved for Space Flight
Contact Retention Clip	Beryllium copper, heat-treated, unplated	Approved for Space Flight
Grommet, Peripheral Seal, Interfacial Seal, Special Auxiliary Seals, O-ring	Blended fluorosilicone/silicone elastomer	Requires outgassing processing
Pin/Socket Contact	Gold plated beryllium copper alloy	Approved for Space Flight
Socket Contact Hood	Stainless steel	Approved for Space Flight
Potting Compounds and Adhesives	RTV and epoxies	Requires outgassing processing

© 2022 Glenair, Inc • 1211 Air Way, Glendale, CA 91201 • 818-247-6000 • www.glenair.com • U.S. CAGE code 06324 • SuperNine® Catalog
Dimensions in Inches (millimeters) are subject to change without notice.



SuperNine®

Space-Grade, High-Speed Circular, Blind-Mate Connectors



Application: Glenair Series 253 blind-mate connectors are designed to meet applicable environmental, electrical and mechanical performance characteristics of D38999 Series III. The technology is well suited for use in commercial rack-and-panel instrumentation applications, as well as a blind-mate solution for satellite deployment, scientific research and development payloads, interstage, UAV, and munitions release and more.

- **Blind-mate, fixed and float-mount interconnects for non-ITAR commercial as well as military/defense applications**
- **Adjustable separation force (AKA assisted-release, zero extraction force) solutions**
- **Misalignment accommodation and special auxiliary sealing for trouble-free blind mating in environmental applications**
- **Available in most symmetrical MIL-STD-1560 insert arrangements with contacts sizes from #23 to #8**
- **Selected materials offer low outgassing properties and high resistance to both corrosion and stress corrosion cracking**
- **NASA outgassing bake-out process available**
- **Designed to withstand the rigors of launch and flight—including shock, vibration, thermal vacuum, acceleration, and temperature extremes**
- **Standard accessory threads and teeth per MIL-DTL-38999 accommodate a wide range of backshell accessories**
- **Crimp-removable contacts standard. Consult factory for PC tails, dual-flange standoffs, custom blind-mate configurations, and hermetically sealed options**

Current Rating	
Size Contact	Amps
23	5
22D	5
20	7.5
16	13
12	23

Unmated Test Voltages, AC RMS, 60 Hz				
Altitude (Feet)	Service Rating M	Service Rating N	Service Rating I	Service Rating II
Sea Level	1300	1000	1800	2300
50,000	550	400	600	800
70,000	350	260	400	500
100,000	200	260	200	200

ADVANCED PERFORMANCE

SuperNine® High-Speed Series

MIL-DTL-38999 Series III Type Space-Grade Connectors

Environmental blind-mate and zero extraction force connectors

CRITICAL MECHANICAL FEATURES OF BLIND-MATE AND ADJUSTABLE SEPARATION FORCE (ZEF) FLOAT RECEPTACLE AND FIXED MOUNT PLUG CONNECTORS



Roll-off nose: allows for the smooth disconnection of blind mate plugs and receptacles. Without this feature, connectors can catch or hang during mate and demate.



Float mounting: allows for a modicum of coplanar movement of the receptacle during rack-and-panel and other blind mate applications, preventing both contact and shell damage.



Misalignment accommodation: Additional radial, axial, and angular misalignment during mating is accounted for in the receptacle design with integral wave springs.



Sealing: Misalignment accommodation makes environmental sealing difficult in blind-mate connectors. The problem is solved with auxiliary external seals.





EMI shielding: Glenair incorporates ground springs in receptacle connectors as well as grounding fingers in special coupling nut-equipped plugs (253-018-G6 feed-thru shown) to optimize 360° shell-to-shell continuity.





Assisted separation force: Glenair supplies two styles of spring-loaded blind-mate connectors. **Adjustable kick-off styles** feature spring-loaded posts on the plug and an adjustment ring on the receptacle used to calibrate separation force. A second style uses wave springs on the shell body.

Available non-ITAR environmental, high-speed blind-mate and adjustable separation force solutions		
Basic Part No.	**Description**	**Mates With**
253-044	Fixed jam-nut and square flange mount plug with roll-on/roll-off nose and accessory threads	253-045
253-045	Floating jam-nut and square flange mount receptacle with misalignment accommodation and optional sealing	253-044
253-047	Fixed wall mount plug with spring assist (adjustable separation force)	253-048
253-048	Floating wall mount receptacle with adjustable separation force and misalignment accommodation	253-047

© 2022 Glenair, Inc • 1211 Air Way, Glendale, CA 91201 • 818-247-6000 • www.glenair.com • U.S. CAGE code 06324 • SuperNine® Catalog
Dimensions in Inches (millimeters) are subject to change without notice.

SuperNine® High-Speed Series

MIL-DTL-38999 Series III Type Space-Grade Connectors

253-044 Fixed mount plug with roll off nose an crimp contacts

Part Number Development										
Sample Part Number	**253-044**	**-**	**07**	**ME**	**25**	**-**	**8**	**A**	**N**	**-909CP**
Series / Basic Part No.	**253-044** = Blind-mate Plug (fixed mount)									
Accessory Style	**B** = Integral Backshell **-** (Dash) = Accessory Thread									
Connector Stwyle	**L7** = Jam nut (locating pin) **00** = Wall mount rcpt; slotted holes **07** = Jam nut mount **D0** = Wall mount rcpt; through holes									
Material/Finish	**ME** = Al, electroless nickel **ZL** = CRES, electrodeposited nickel **MT** = Al, nickel PTFE **Z1** = CRES, passivated									
Shell Size	**9 11 13 17 19 21 23 25**									
Ground Option	**G** = Common ground **-** (dash) = None									
Insert Arrangement	Per MIL-STD-1560 plus custom layouts; symmetrical layouts only, consult factory for complete details									
Insert Designator	**A** = Pin insert, less contacts **B** = Socket insert, less contacts									
Alternate Polarization	**A, B, C, D, E, N** = Normal (Polarization for intermateability with 253-014 is per MIL-DTL-38999 Series I)									
Optional Mod Code	**909**** = See Mod Code specifications below									

***Refer to section A for complete details.** Refer to Space-Grade Guidelines material (IAW NASA EEE INST-002) for outgassing and screening modification codes, on pages 80 and 81. Modification codes may be added directly to the end of any valid part number

Modification code 909xx is used to supply D38999 Series III Type connectors featuring crimp removable type contacts with high-speed contact kits. Kits include spares, tools, and sealing plugs. See example below.

253-044-07ME25-8AN -909 C P

- Basic Connector Part Number
- Basic Modification Code **909**
- Contact Type Symbol (See Contact Type Table) **C, D, E*, Q, P, T**
- Contact Gender (Optional) **P** = Pin, **S** = Skt

*For El Ochito see Contact Configuration Table on following page for appropriate code and dash number symbol.

FIGURE 2: REFERENCE ORIENTATION OF INNER PINS RELATIVE TO CONNECTOR MAIN KEY/KEYWAY



DIFERENTIAL TWINAX | QUADRAX | EL OCHITO SIZE 8

Contact Type					
Sym	**Description**	**Glenair P/N**	**Wire Type**	**Grommet Follower**	**Application Notes**
C	Size 16, contact for coax cable, per M39029/76 & /77;	Pin: 852-008-16-424 Skt: 852-009-16-428	RG174, RG316, RG179	N/A	Analog radio frequency or microwave applications
	Size 12, contact for coax cable, per M39029/102 & /103	Pin: 852-004-12-558 Skt: 852-005-12-559	RG174, RG316, RG179	N/A	
	Size 8, contact for coax cable, per M39029/59 & /60	Pin: 852-007-08-367 Skt: 852-006-08-366	M17 /95-RG180	859-042-02	
C1	Size 8, contact for 75 ohm coax cable	Pin: 852-056-01 Skt: 852-057-01	V73263, V75268, V76261	859-042-01	aerospace-grade digital video
D	Size 8, diff. twinax contact for 24 AWG twinax cable	Pin: 853-014-05 Skt: 853-013-05	M17 /176-00002	859-042-01	1553 databus / differential signal
E*	Size 8, El Ochito® contact for 26 AWG	White Pin: 858-003-02 Skt: 858-004-02	963-003-26 963-033-26	687-643-8-2	1G/10G Base-T Ethernet (white)
	Size 8, El Ochito® contact for 24/26-30 AWG Cable	Blue Pin: 858-028-02 Skt: 858-029-02	963-110 & 963-118	687-643-8-2	USB 3.0 (Blue)
	Size 8, El Ochito® contact for 26-30 AWG Cable	Red Pin: 858-030-02 Skt: 858-031-02	963-033-26	687-643-8-2	SATA 3.0 General High Speed (red)
Q	Size 8, contact for 24 AWG Quadrax	Pin: 854-001-02 Skt: 854-002-02	963-020	859-042-02	10/100Base-T ethernet
P	Size 8, power contact for 8 AWG	Pin: 850-014 Skt: 850-013	M22759/11 or equivalent	859-042-03	Power
T	Size 8, triax/ concentric twinax for twinax cable	Pin: 853-003-08-625 Skt: 853-004-08-628	M17 /176-00002	859-042-01	1553 Databus

* See Table II for Contact Positions. See Figure 2 for orientation of inner pins relative to connector main key/keyway.

© 2018 Glenair, Inc • 1211 Air Way, Glendale, CA 91201 • 818-247-6000 • www.glenair.com • U.S. CAGE code 06324 • SuperNine® Catalog
Dimensions in Inches (millimeters) are subject to change without notice.

ADVANCED PERFORMANCE

SuperNine® High-Speed Series

MIL-DTL-38999 Series III Type Space-Grade Connectors

253-044 Fixed mount plug with roll off nose an crimp contacts

El Ochito Protocols		
		
WHITE	**BLUE**	**RED**
10GBASE-T	USB 3.0	Multi Gigabit 100 ohm protocols HDMI, SATA, DisplayPort



Example Code E7



Example Code E5

PANEL TO PANEL DIMENSIONS

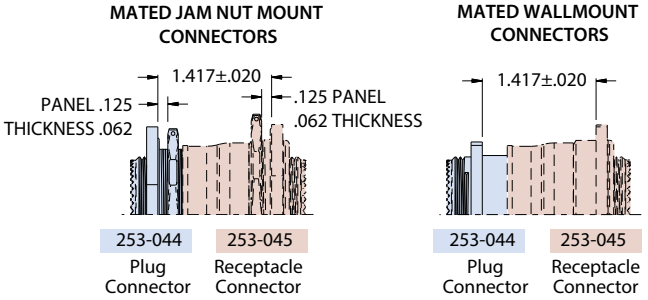

NOTES:

1. Glenair 253-044 is designed to mate with 253-045 with same insert arrangement. and polarization
2. Stainless steel locating pin to be shipped with L7 jam-nut connector
3. Misalignment capabilities are possible with 253-044, when mated to 253-045.
4. See page 80 for outgassing options
5. 253-044 connectors are rear panel mount only. Panel to panel dimensions the same for all configurations. Tolerance as shown
6. See page 80 for outgassing options
7. Material/finish
   - Shell, jam-nut: see P/N development, finish
   - Insulator: high grade rigid dielectric/N.A.
   - Seals: fluorosilicone blend/N.A.
   - Contacts: copper alloy/gold plated

El Ochito Contact Configuration								
SYM	CAVITY A	CAVITY B	CAVITY C	CAVITY D	CAVITY E	CAVITY F	CAVITY G	CAVITY H
E	W	W	W	W	W	W	W	W
E2	B	W	W	W	W	W	W	W
E3	R	W	W	W	W	W	W	W
E4	B	B	W	W	W	W	W	W
E5	R	B	W	W	W	W	W	W
E6	R	R	W	W	W	W	W	W
E7	B	B	B	W	W	W	W	W
E8	R	B	B	W	W	W	W	W
E9	R	R	B	W	W	W	W	W
E10	R	R	R	W	W	W	W	W
E11	B	B	B	B	W	W	W	W
E12	R	B	B	B	W	W	W	W
E13	R	R	B	B	W	W	W	W
E14	R	R	R	B	W	W	W	W
E15	R	R	R	R	W	W	W	W
E16	B	B	B	B	B	W	W	W
E17	R	B	B	B	B	W	W	W
E18	R	R	B	B	B	W	W	W
E19	R	R	R	B	B	W	W	W
E20	R	R	R	R	B	W	W	W
E21	R	R	R	R	R	W	W	W
E22	B	B	B	B	B	B	W	W
E23	R	B	B	B	B	B	W	W
E24	R	R	B	B	B	B	W	W
E25	R	R	R	B	B	B	W	W
E26	R	R	R	R	B	B	W	W
E27	R	R	R	R	R	B	W	W
E28	R	R	R	R	R	R	W	W
E29	B	B	B	B	B	B	B	W
E30	R	B	B	B	B	B	B	W
E31	R	R	B	B	B	B	B	W
E32	R	R	R	B	B	B	B	W
E33	R	R	R	R	B	B	B	W
E34	R	R	R	R	R	B	B	W
E35	R	R	R	R	R	R	B	W
E36	R	R	R	R	R	R	R	W
E37	B	B	B	B	B	B	B	B
E38	R	B	B	B	B	B	B	B
E39	R	R	B	B	B	B	B	B
E40	R	R	R	B	B	B	B	B
E41	R	R	R	R	B	B	B	B
E42	R	R	R	R	R	B	B	B
E43	R	R	R	R	R	R	B	B
E44	R	R	R	R	R	R	R	B
E45	R	R	R	R	R	R	R	R

© 2018 Glenair, Inc • 1211 Air Way, Glendale, CA 91201 • 818-247-6000 • www.glenair.com • U.S. CAGE code 06324 • SuperNine® Catalog
Dimensions in Inches (millimeters) are subject to change without notice.

SuperNine® High-Speed Series

MIL-DTL-38999 Series III Type Space-Grade Connectors

253-044 Fixed mount plug with roll off nose an crimp contacts

253-044-L7 JAM-NUT MOUNT PLUG WITH LOCATING PIN, ROLL-ON/ROLL-OFF NOSE, ACCESSORY THREADS AND SIZE 8 HIGH-SPEED CONTACTS

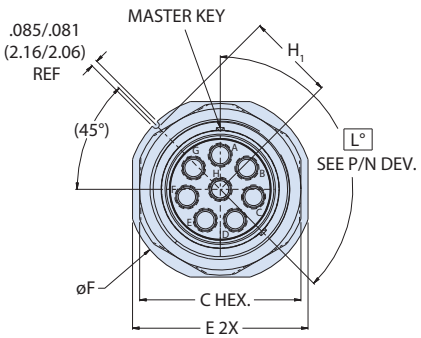

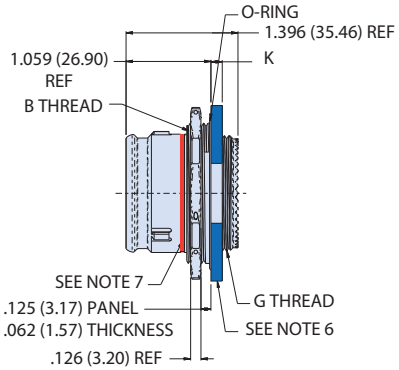

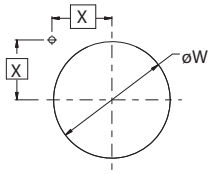

RECOMMENDED PANEL CUT OUT
FOR JAM NUT PLUG, LOCATING PIN

253-044-07 JAM-NUT MOUNT PLUG WITH ROLL-ON/ROLL-OFF NOSE, ACCESSORY THREADS AND SIZE 8 HIGH-SPEED CONTACTS

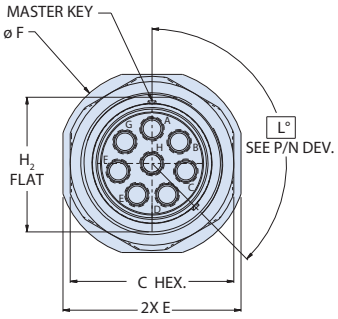

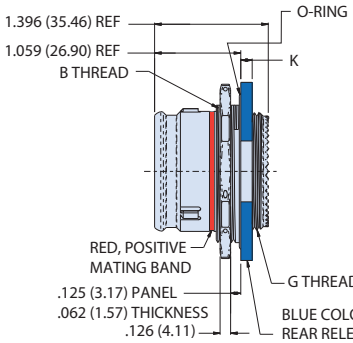

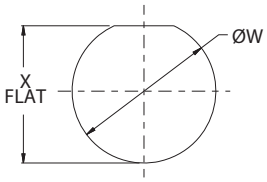

RECOMMENDED PANEL CUT OUT
FOR JAM NUT PLUG

Plug, Jam Nut Mount L7 (Locating Pin) and 07 (Standard)										
									Panel Cut-out	
Shell Size	B Thread Class 2A	C ±.015	E ±.015	Ø F	H_1 +.000/ -0.008	H_2 Flat +.000/ -0.006	G Thread UNEF Class 2A	K Flange Thickness	øW +.010/ 0.000	X
11	.8125-20 UNEF	1.010 (25.65)	1.250 (31.75)	1.386 (35.20)	0.604 (15.34)	0.754 (19.15)	.5625-24	0.109 (2.77)	0.823 (20.90)	0.460 (11.68)
13	1.0000-20 UNEF	1.175 (29.85)	1.375 (34.92)	1.511 (38.38)	0.666 (16.92)	0.936 (23.77)	.6875-24	0.109 (2.77)	1.010 (25.65)	0.504 (12.80)
15	1.1250-18 UNEF	1.294 (32.87)	1.500 (38.10)	1.636 (41.55)	0.729 (18.52)	1.066 (27.08)	.8125-20	0.109 (2.77)	1.135 (28.83)	0.549 (13.94)
17	1.2500-18 UNEF	1.451 (36.86)	1.625 (41.28)	1.761 (44.73)	0.791 (20.09)	1.191 (30.25)	.9375-20	0.109 (2.77)	1.260 (32.00)	0.593 (15.06)
19	1.3750-18 UNEF	1.569 (39.85)	1.812 (46.02)	1.949 (49.50)	0.893 (22.68)	1.316 (33.43)	1.0625-18	0.140 (3.56)	1.385 (35.18)	0.665 (16.89)
21	1.5000-18 UNEF	1.687 (42.85)	1.938 (49.23)	2.073 (52.65)	0.955 (24.26)	1.441 (36.60)	1.1875-18	0.140 (3.56)	1.510 (38.35)	0.709 (18.01)
23	1.6250-18 UNEF	1.875 (47.63)	2.062 (52.37)	2.200 (55.88)	1.017 (25.83)	1.566 (39.78)	1.3125-18	0.140 (3.56)	1.635 (41.53)	0.753 (19.13)
25	1.7500-18 UNS	2.010 (51.05)	2.187 (55.55)	2.323 (59.00)	1.096 (27.84)	1.691 (42.95)	1.4375-18	0.140 (3.56)	1.760 (44.70)	0.806 (20.47)

© 2018 Glenair, Inc • 1211 Air Way, Glendale, CA 91201 • 818-247-6000 • www.glenair.com • U.S. CAGE code 06324 • SuperNine® Catalog

Dimensions in Inches (millimeters) are subject to change without notice.

SuperNine® High-Speed Series

MIL-DTL-38999 Series III Type Space-Grade Connectors

253-044 Fixed mount plug with roll off nose an crimp contacts

253-044-00 WALL MOUNT MOUNT PLUG WITH SLOTTED HOLLS, ROLL-ON/ROLL-OFF NOSE, ACCESSORY THREADS AND SIZE 8 HIGH-SPEED CONTACTS

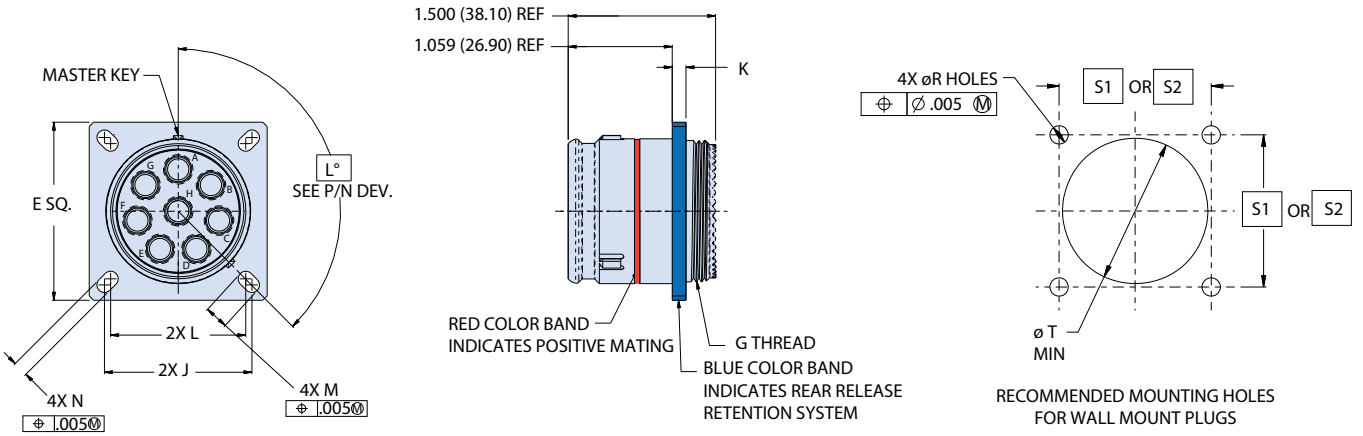

253-044-D0 WALL MOUNT MOUNT PLUG WITH SLOTTED HOLLS, ROLL-ON/ROLL-OFF NOSE, ACCESSORY THREADS AND SIZE 8 HIGH-SPEED CONTACTS

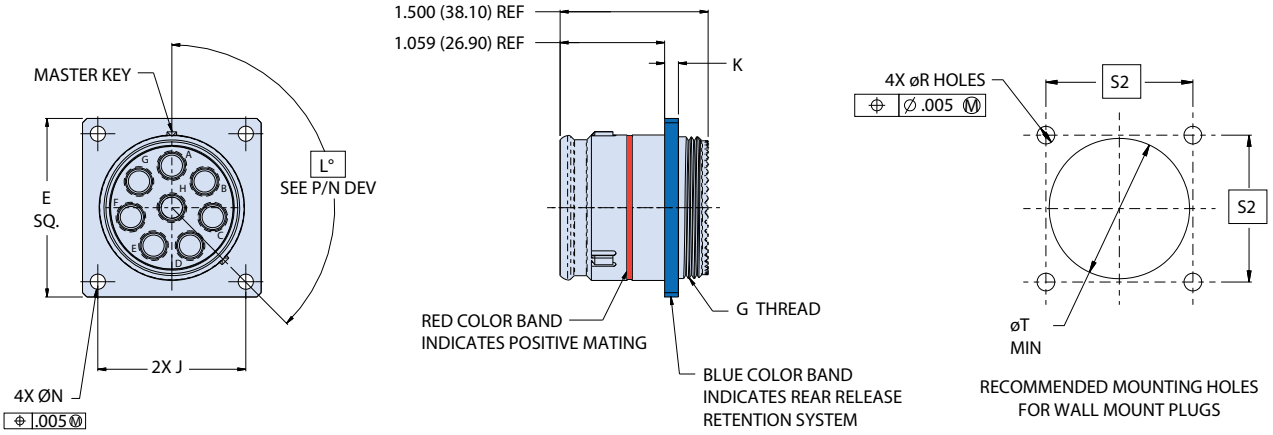

Wall Mount Plug with Slotted Holes and Round Holes											
Shell Size	E	L	J	M	N	G Thd UNEF Class 2A	Flange Thickness	Panel Mount			
								S1	S2	T Dia.	R Dia.
11	1.031 (26.19)	0.719 (18.26)	0.812 (20.62)	0.194 (4.93)	0.128 (3.25)	.5625-24	0.109 (2.77)	0.719 (18.26)	0.812 (20.62)	0.718 (18.24)	0.133 (3.38) 0.123 (3.12)
13	1.126 (28.60)	0.812 (20.62)	0.906 (23.01)	0.194 (4.93)	0.128 (3.25)	.6875-24	0.109 (2.77)	0.812 (20.62)	0.906 (23.01)	0.844 (21.44)	
15	1.220 (30.99)	0.906 (23.01)	0.969 (24.61)	0.173 (4.39)	0.128 (3.25)	.8125-20	0.109 (2.77)	0.906 (23.01)	0.969 (24.61)	0.968 (24.59)	
17	1.311 (33.30)	0.969 (24.61)	1.062 (26.97)	0.194 (4.93)	0.128 (3.25)	.9375-20	0.109 (2.77)	0.969 (24.61)	1.062 (26.97)	1.096 (27.84)	
19	1.437 (36.50)	1.062 (26.97)	1.156 (29.36)	0.194 (4.93)	0.128 (3.25)	1.0625-18	0.140 (3.56)	1.062 (26.97)	1.156 (29.36)	1.222 (31.04)	
21	1.563 (39.70)	1.156 (29.36)	1.250 (31.75)	0.194 (4.93)	0.128 (3.25)	1.1875-18	0.140 (3.56)	1.156 (29.36)	1.250 (31.75)	1.344 (34.14)	
23	1.689 (42.90)	1.250 (31.75)	1.375 (34.92)	0.242 (6.15)	0.154 (3.91)	1.3125-18	0.140 (3.56)	1.250 (31.75)	1.375 (34.92)	1.468 (37.29)	0.159 (4.04) 0.149 (3.78)
25	1.811 (46.00)	1.375 (34.92)	1.500 (38.10)	0.242 (6.15)	0.154 (3.91)	1.4375-18	0.140 (3.56)	1.375 (34.92)	1.500 (38.10)	1.594 (40.49)	0.155 (3.94) 0.145 (3.68)

© 2018 Glenair, Inc • 1211 Air Way, Glendale, CA 91201 • 818-247-6000 • www.glenair.com • U.S. CAGE code 06324 • SuperNine® Catalog
Dimensions in Inches (millimeters) are subject to change without notice.

SuperNine® High-Speed Series

MIL-DTL-38999 Series III Type Space-Grade Connectors

253-045 Float mount receptacle with mis-alignment capabilities

Part Number Development

Sample Part Number	253-045	-	07	ME	25	-	8	A	N	NS	-909CP
Series / Basic Part No.	**253-045** = Blind-mate receptacle (float mnt)										
Accessory Style	**B** = Integral Backshell **-** (Dash) = Accessory Thread										
Connector Style	**L7** = Jam nut (locating pin)] **00** = Wall mount rcpt; slotted holes **07** = Jam nut mount (flat thread) **D0** = Wall mount rcpt; through holes										
Material/Finish	**ME** = Alum./electroless nickel **MT** = Alum./nickel PTFE **ZL** = CRES/electrodeposited nickel **Z1** = CRES/passivated										
Shell Size	**9 11 13 17 19 21 23 25**										
Ground Option	**G** = Common ground **-** (dash) = None										
Insert Arrangement	Per MIL-STD-1560 plus custom layouts; symmetrical layouts only, consult factory for complete details										
Insert Designator	**A** = Pin insert, less contacts **B** = Socket insert, less contacts										
Alternate Polarization (L°)	**A** = 40°, **B** = 65°, **C** = 80°, **D** = 210°, **E** =250°, **N** = 135° Normal										
Non Sealing	**NS** = Non sealing version **Omit** = Sealing version										
Optional Mod Code	**909**** = See Mod Code specifications below										

***Refer to section A for complete details.** Refer to Space-Grade Guidelines material (IAW NASA EEE INST-002) for outgassing and screening modification codes, on pages 80 and 81. Modification codes may be added directly to the end of any valid part number

Modification code 909xx is used to supply D38999 Series III Type connectors featuring crimp removable type contacts with high-speed contact kits. Kits include spares, tools, and sealing plugs. See example below.

253-045-07ME25-8ANNS -909 C P

- Basic Connector Part Number
- Basic Modification Code **909**
- Contact Type Symbol (See Contact Type Table) **C, D, E*, Q, P, T**
- Contact Gender (Optional) **P** = Pin, **S** = Skt

*For El Ochito see Contact Configuration Table on following page for appropriate code and dash number symbol.

FIGURE 2: REFERENCE ORIENTATION OF INNER PINS RELATIVE TO CONNECTOR MAIN KEY/KEYWAY



DIFERENTIAL TWINAX | QUADRAX | EL OCHITO SIZE 8

Contact Type

Sym	Description	Glenair P/N	Wire Type	Grommet Follower	Application Notes
C	Size 16, contact for coax cable, per M39029/76 & /77;	Pin: 852-008-16-424 Skt: 852-009-16-428	RG174, RG316, RG179	N/A	Analog radio frequency or microwave applications
	Size 12, contact for coax cable, per M39029/102 & /103	Pin: 852-004-12-558 Skt: 852-005-12-559	RG174, RG316, RG179	N/A	
	Size 8, contact for coax cable, per M39029/59 & /60	Pin: 852-007-08-367 Skt: 852-006-08-366	M17 /95-RG180	859-042-02	
C1	Size 8, contact for 75 ohm coax cable	Pin: 852-056-01 Skt: 852-057-01	V73263, V75268, V76261	859-042-01	aerospace-grade digital video
D	Size 8, diff. twinax contact for 24 AWG twinax cable	Pin: 853-014-05 Skt: 853-013-05	M17 /176-00002	859-042-01	1553 databus / differential signal
E*	Size 8, El Ochito® contact for 26 AWG	White Pin: 858-003-02 Skt: 858-004-02	963-003-26 963-033-26	687-643-8-2	1G/10G Base-T Ethernet (white)
	Size 8, El Ochito® contact for 24/26-30 AWG Cable	Blue Pin: 858-028-02 Skt: 858-029-02	963-110 & 963-118	687-643-8-2	USB 3.0 (Blue)
	Size 8, El Ochito® contact for 26-30 AWG Cable	Red Pin: 858-030-02 Skt: 858-031-02	963-033-26	687-643-8-2	SATA 3.0 General High Speed (red)
Q	Size 8, contact for 24 AWG Quadrax	Pin: 854-001-02 Skt: 854-002-02	963-020	859-042-02	10/100Base-T ethernet
P	Size 8, power contact for 8 AWG	Pin: 850-014 Skt: 850-013	M22759/11 or equivalent	859-042-03	Power
T	Size 8, triax/ concentric twinax for twinax cable	Pin: 853-003-08-625 Skt: 853-004-08-628	M17 /176-00002	859-042-01	1553 Databus

* See Table II for Contact Positions. See Figure 2 for orientation of inner pins relative to connector main key/keyway.

© 2018 Glenair, Inc • 1211 Air Way, Glendale, CA 91201 • 818-247-6000 • www.glenair.com • U.S. CAGE code 06324 • SuperNine® Catalog
Dimensions in Inches (millimeters) are subject to change without notice.

SuperNine® High-Speed Series

MIL-DTL-38999 Series III Type Space-Grade Connectors

253-044 Fixed mount plug with roll off nose an crimp contacts

El Ochito Protocols		
		
WHITE	**BLUE**	**RED**
10GBASE-T	USB 3.0	Multi Gigabit 100 ohm protocols HDMI, SATA, DisplayPort



Example Code E7



Example Code E5

PANEL TO PANEL DIMENSIONS

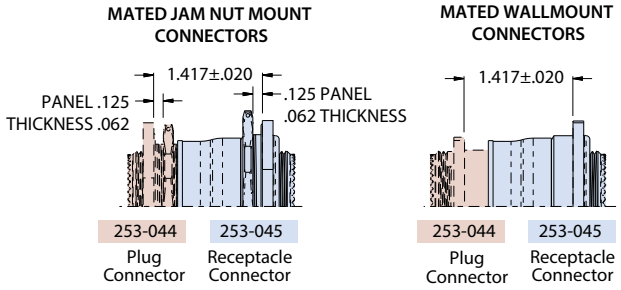

NOTES:

1. Glenair 253-044 is designed to mate with 253-045 with same insert arrangement. and polarization
2. Stainless steel locating pin to be shipped with L7 jam-nut connector
3. Misalignment capabilities are possible with 253-045, when mated to 253-044.
4. See page 80 for outgassing options
5. 253-045 connectors are rear panel mount only. Panel to panel dimensions the same for all configurations. Tolerance as shown
6. Contact Manufacturer for outgassing options
7. Material/finish
   - Shell, jam-nut: see P/N development, finish
   - Insulator: high grade rigid dielectric/N.A.
   - Seals: fluorosilicone blend/N.A.
   - Contacts: copper alloy/gold plated

El Ochito Contact Configuration								
SYM	CAVITY A	CAVITY B	CAVITY C	CAVITY D	CAVITY E	CAVITY F	CAVITY G	CAVITY H
E	W	W	W	W	W	W	W	W
E2	B	W	W	W	W	W	W	W
E3	R	W	W	W	W	W	W	W
E4	B	B	W	W	W	W	W	W
E5	R	B	W	W	W	W	W	W
E6	R	R	W	W	W	W	W	W
E7	B	B	B	W	W	W	W	W
E8	R	B	B	W	W	W	W	W
E9	R	R	B	W	W	W	W	W
E10	R	R	R	W	W	W	W	W
E11	B	B	B	B	W	W	W	W
E12	R	B	B	B	W	W	W	W
E13	R	R	B	B	W	W	W	W
E14	R	R	R	B	W	W	W	W
E15	R	R	R	R	W	W	W	W
E16	B	B	B	B	B	W	W	W
E17	R	B	B	B	B	W	W	W
E18	R	R	B	B	B	W	W	W
E19	R	R	R	B	B	W	W	W
E20	R	R	R	R	B	W	W	W
E21	R	R	R	R	R	W	W	W
E22	B	B	B	B	B	B	W	W
E23	R	B	B	B	B	B	W	W
E24	R	R	B	B	B	B	W	W
E25	R	R	R	B	B	B	W	W
E26	R	R	R	R	B	B	W	W
E27	R	R	R	R	R	B	W	W
E28	R	R	R	R	R	R	W	W
E29	B	B	B	B	B	B	B	W
E30	R	B	B	B	B	B	B	W
E31	R	R	B	B	B	B	B	W
E32	R	R	R	B	B	B	B	W
E33	R	R	R	R	B	B	B	W
E34	R	R	R	R	R	B	B	W
E35	R	R	R	R	R	R	B	W
E36	R	R	R	R	R	R	R	W
E37	B	B	B	B	B	B	B	B
E38	R	B	B	B	B	B	B	B
E39	R	R	B	B	B	B	B	B
E40	R	R	R	B	B	B	B	B
E41	R	R	R	R	B	B	B	B
E42	R	R	R	R	R	B	B	B
E43	R	R	R	R	R	R	B	B
E44	R	R	R	R	R	R	R	B
E45	R	R	R	R	R	R	R	R

© 2018 Glenair, Inc • 1211 Air Way, Glendale, CA 91201 • 818-247-6000 • www.glenair.com • U.S. CAGE code 06324 • SuperNine® Catalog
Dimensions in Inches (millimeters) are subject to change without notice.

SuperNine® High-Speed Series

MIL-DTL-38999 Series III Type Space-Grade Connectors

253-045 Float mount receptacle with mis-alignment capabilities

253-045-L7 JAM-NUT MOUNT, FLOAT MOUNT RECEPTACLE WITH LOCATING PIN, ROLL-ON/ROLL-OFF NOSE, ACCESSORY THREADS AND SIZE 8 HIGH-SPEED CONTACTS

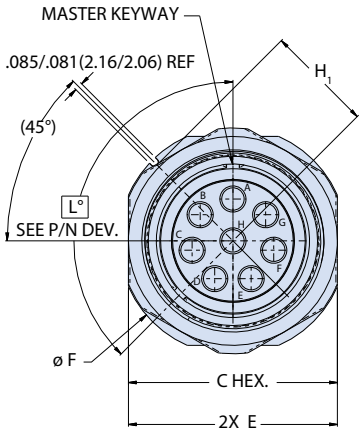

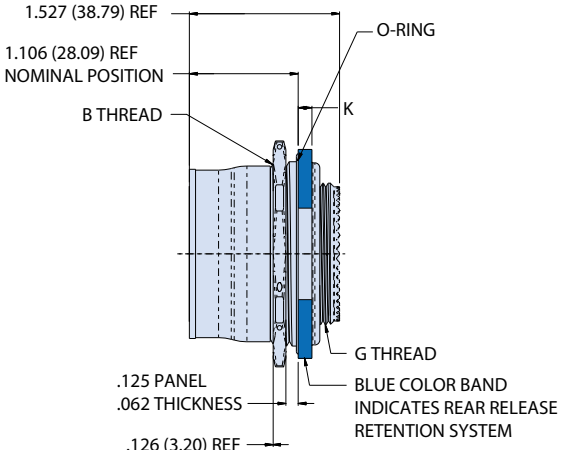

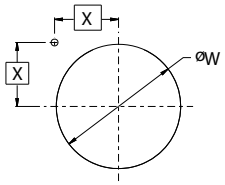

RECOMMENDED PANEL CUT OUT
FOR JAM NUT RECEPTACLE,
AND LOCATING PIN

253-045-L7 Dimensions							
SHELL SIZE	B THREAD CLASS 2A	C ±.015	E ±.015	ø F	H_1 +.000/ -0.008	G THREAD UNEF CLASS 2A	K FLANGE THICKNESS
11	1.0000-20 UNEF	1.175 (29.85)	1.266 (32.16)	1.500 (38.10)	0.666 (16.92)	.5625-24	0.109 (2.77)
13	1.1250-18 UNEF	1.294 (32.87)	1.391 (35.33)	1.641 (41.68)	0.729 (18.52)	.6875-24	0.109 (2.77)
15	1.2500-18 UNEF	1.451 (36.86)	1.516 (38.51)	1.750 (44.45)	0.791 (20.09)	.8125-20	0.109 (2.77)
17	1.3750-18 UNEF	1.569 (39.85)	1.641 (41.68)	1.938 (49.23)	0.893 (22.68)	.9375-20	0.109 (2.77)
19	1.5000-18 UNEF	1.687 (42.85)	1.828 (46.43)	2.062 (52.37)	0.955 (24.26)	1.0625-18	0.140 (3.56)
21	1.6250-18 UNEF	1.875 (47.63)	1.954 (49.63)	2.188 (55.58)	1.017 (25.83)	1.1875-18	0.140 (3.56)
23	1.7500-18 UNS	2.010 (51.05)	2.078 (52.78)	2.312 (58.72)	1.080 (27.43)	1.3125-18	0.140 (3.56)
25	1.8750-16 UN	2.125 (53.97)	2.128 (54.05)	2.327 (59.11)	1.086 (27.58)	1.4375-18	0.140 (3.56)

Panel Mount Dimensions		
SHELL SIZE	ø W +.010/ 0.000	X
11	1.010 (25.65)	0.504 (12.80)
13	1.135 (28.83)	0.549 (13.94)
15	1.260 (32.00)	0.593 (15.06)
17	1.385 (35.18)	0.665 (16.89)
19	1.510 (38.35)	0.709 (18.01)
21	1.635 (41.53)	0.753 (19.13)
23	1.760 (44.70)	0.797 (20.24)
25	1.885 (47.88)	0.799 (20.29)

© 2018 Glenair, Inc • 1211 Air Way, Glendale, CA 91201 • 818-247-6000 • www.glenair.com • U.S. CAGE code 06324 • SuperNine® Catalog
Dimensions in Inches (millimeters) are subject to change without notice.

253-045-07 JAM-NUT MOUNT, FLOAT MOUNT RECEPTACLE WITH LOCATING PIN, ROLL-ON/ROLL-OFF NOSE, ACCESSORY THREADS AND SIZE 8 HIGH-SPEED CONTACTS

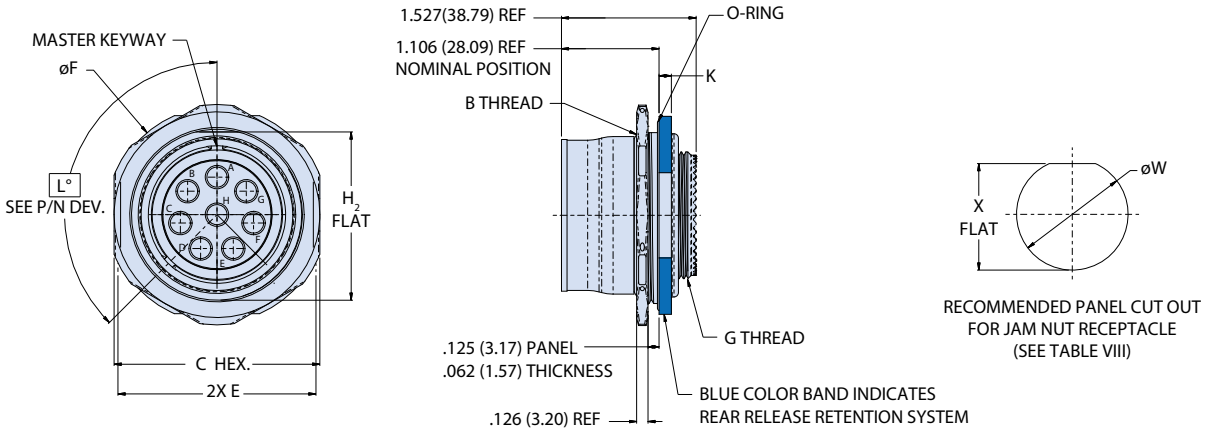

253-045-L7 Dimensions								
SHELL SIZE	B THREAD CLASS 2A	C ±.015	E ±.015	ø F	H_1 +.000/ -0.008	H_2 +.000/ -0.006	G THREAD UNEF CLASS 2A	K FLANGE THICKNESS
11	1.0000-20 UNEF	1.175 (29.85)	1.266 (32.16)	1.500 (38.10)	0.666 (16.92)	1.066 (27.08)	.5625-24	0.109 (2.77)
13	1.1250-18 UNEF	1.294 (32.87)	1.391 (35.33)	1.641 (41.68)	0.729 (18.52)	1.191 (30.25)	.6875-24	0.109 (2.77)
15	1.2500-18 UNEF	1.451 (36.86)	1.516 (38.51)	1.750 (44.45)	0.791 (20.09)	1.316 (33.43)	.8125-20	0.109 (2.77)
17	1.3750-18 UNEF	1.569 (39.85)	1.641 (41.68)	1.938 (49.23)	0.893 (22.68)	1.441 (36.60)	.9375-20	0.109 (2.77)
19	1.5000-18 UNEF	1.687 (42.85)	1.828 (46.43)	2.062 (52.37)	0.955 (24.26)	1.566 (39.78)	1.0625-18	0.140 (3.56)
21	1.6250-18 UNEF	1.875 (47.63)	1.954 (49.63)	2.188 (55.58)	1.017 (25.83)	4.691 (119.15)	1.1875-18	0.140 (3.56)
23	1.7500-18 UNS	2.010 (51.05)	2.078 (52.78)	2.312 (58.72)	1.080 (27.43)	1.816 (46.13)	1.3125-18	0.140 (3.56)
25	1.8750-16 UN	2.125 (53.97)	2.128 (54.05)	2.327 (59.11)	1.086 (27.58)	1.941 (49.30)	1.4375-18	0.140 (3.56)

Panel Mount Dimensions		
SHELL SIZE	ø W +.010/ 0.000	X FLAT +.000/ -0.010
11	1.135 (28.83)	1.085 (27.56)
13	1.260 (32.00)	1.210 (30.73)
15	1.385 (35.18)	1.335 (33.91)
17	1.510 (38.35)	1.460 (37.08)
19	1.635 (41.53)	1.585 (40.26)
21	1.760 (44.70)	1.710 (43.43)
23	1.885 (47.88)	1.835 (46.61)
25	2.010 (51.05)	1.960 (49.78)

© 2018 Glenair, Inc • 1211 Air Way, Glendale, CA 91201 • 818-247-6000 • www.glenair.com • U.S. CAGE code 06324 • SuperNine® Catalog
Dimensions in Inches (millimeters) are subject to change without notice.

SuperNine® High-Speed Series

MIL-DTL-38999 Series III Type Space-Grade Connectors

253-045 Float mount receptacle with mis-alignment capabilities

253-045-00 WALL MOUNT FLOAT MOUNT RECEPTACLE WITH SLOTTED HOLES, ROLL-ON/ROLL-OFF NOSE, ACCESSORY THREADS AND SIZE 8 HIGH-SPEED CONTACTS

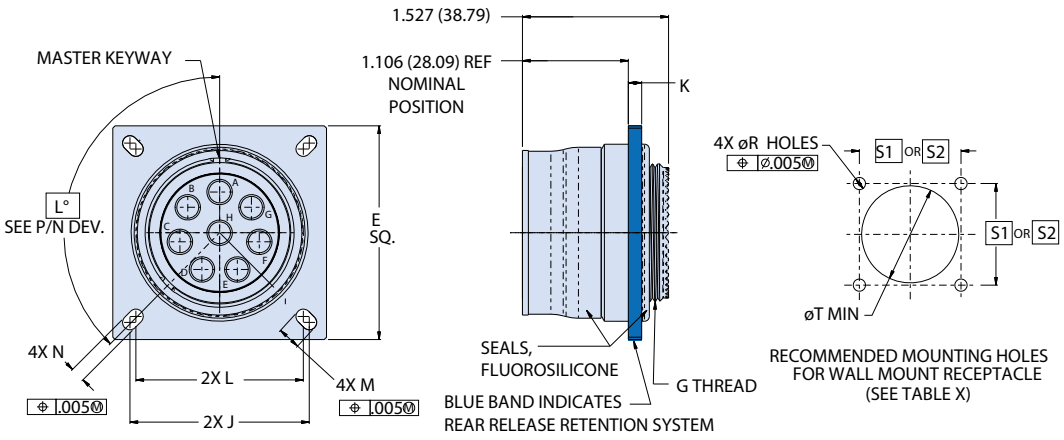

Panel Mount		
SHELL SIZE	T DIA. +.010 0.000	R DIA.
11	0.970 (24.64)	0.133 (3.38)
13	1.095 (27.81)	
15	1.200 (30.48)	0.123 (3.12)
17	1.335 (33.91)	
19	1.450 (36.83)	0.155 (3.94)
21	1.575 (40.00)	
23	1.720 (43.69)	0.145 (3.68)
25	1.845 (46.86)	

253-045-00 Dimensions with Sealing									
SHELL SIZE	E	L	J	M	N	G THREAD UNEF CLASS 2A	K FLANGE THICKNESS	S1	S2
11	1.311 (33.30)	0.969 (24.61)	1.062 (26.97)	0.194 (4.93)	0.128 (3.25)	.5625-24	0.109 (2.77)	0.969 (24.61)	1.062 (26.97)
13	1.437 (36.50)	1.062 (26.97)	1.156 (29.36)	0.194 (4.93)	0.128 (3.25)	.6875-24	0.109 (2.77)	1.062 (26.97)	1.156 (29.36)
15	1.563 (39.70)	1.156 (29.36)	1.250 (31.75)	0.194 (4.93)	0.128 (3.25)	.8125-20	0.109 (2.77)	1.156 (29.36)	1.250 (31.75)
17	1.689 (42.90)	1.250 (31.75)	1.375 (34.92)	0.216 (5.49)	0.128 (3.25)	.9375-20	0.109 (2.77)	1.250 (31.75)	1.375 (34.92)
19	1.811 (46.00)	1.375 (34.92)	1.500 (38.10)	0.242 (6.15)	0.154 (3.91)	1.0625-18	0.140 (3.56)	1.375 (34.92)	1.500 (38.10)
21	1.952 (49.58)	1.500 (38.10)	1.625 (41.28)	0.242 (6.15)	0.154 (3.91)	1.1875-18	0.140 (3.56)	1.500 (38.10)	1.625 (41.28)
23	2.093 (53.16)	1.625 (41.28)	1.750 (44.45)	0.242 (6.15)	0.154 (3.91)	1.3125-18	0.140 (3.56)	1.625 (41.28)	1.750 (44.45)
25	2.234 (56.74)	1.750 (44.45)	1.875 (47.63)	0.242 (6.15)	0.154 (3.91)	1.4375-18	0.140 (3.56)	1.750 (44.45)	1.875 (47.63)

253-045-00 Dimensions without Sealing									
SHELL SIZE	EE	LL	JJ	MM	NN	GG THREAD UNEF CLASS 2A	KK FLANGE THICKNESS	SS1	SS2
11	1.126 (28.60)	0.812 (20.62)	0.906 (23.01)	0.194 (4.93)	0.128 (3.25)	.5625-24	0.109 (2.77)	0.812 (20.62)	0.906 (23.01)
13	1.220 (30.99)	0.906 (23.01)	0.969 (24.61)	0.173 (4.39)	0.128 (3.25)	.6875-24	0.109 (2.77)	0.906 (23.01)	0.969 (24.61)
15	1.311 (33.30)	0.969 (24.61)	1.062 (26.97)	0.194 (4.93)	0.128 (3.25)	.8125-20	0.109 (2.77)	0.969 (24.61)	1.062 (26.97)
17	1.437 (36.50)	1.062 (26.97)	1.156 (29.36)	0.194 (4.93)	0.128 (3.25)	.9375-20	0.109 (2.77)	1.062 (26.97)	1.156 (29.36)
19	1.563 (39.70)	1.156 (29.36)	1.250 (31.75)	0.220 (5.59)	0.154 (3.91)	1.0625-18	0.140 (3.56)	1.156 (29.36)	1.250 (31.75)
21	1.689 (42.90)	1.250 (31.75)	1.375 (34.92)	0.242 (6.15)	0.154 (3.91)	1.1875-18	0.140 (3.56)	1.250 (31.75)	1.375 (34.92)
23	1.811 (46.00)	1.375 (34.92)	1.500 (38.10)	0.242 (6.15)	0.154 (3.91)	1.3125-18	0.140 (3.56)	1.375 (34.92)	1.500 (38.10)
25	1.952 (49.58)	1.500 (38.10)	1.625 (41.28)	0.242 (6.15)	0.154 (3.91)	1.4375-18	0.140 (3.56)	1.500 (38.10)	1.625 (41.28)

© 2018 Glenair, Inc • 1211 Air Way, Glendale, CA 91201 • 818-247-6000 • www.glenair.com • U.S. CAGE code 06324 • SuperNine® Catalog
Dimensions in Inches (millimeters) are subject to change without notice.

253-045-D0 WALL MOUNT FLOAT MOUNT RECEPTACLE WITH ROUND HOLES, ROLL-ON/ROLL-OFF NOSE, ACCESSORY THREADS AND SIZE 8 HIGH-SPEED CONTACTS

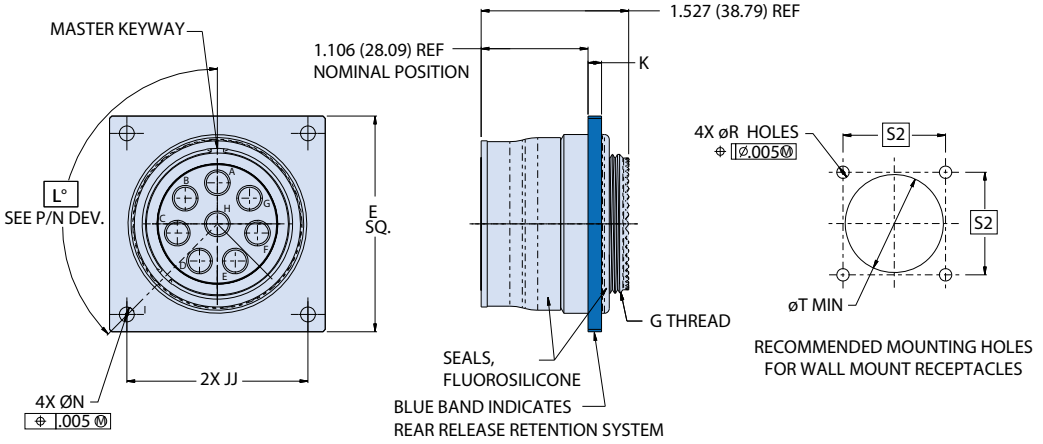

Panel Mount		
SHELL SIZE	T DIA. +.010 0.000	R DIA.
11	0.970	0.133 0.123
13	1.095	
15	1.200	
17	1.335	
19	1.450	0.155 0.145
21	1.575	
23	1.720	
25	1.845	

253-045-D0 Dimensions with Sealing						
SHELL SIZE	E	J	N	G THREAD UNEF CLASS 2A	K FLANGE THICKNESS	S2
11	1.311 (33.30)	1.062 (26.97)	0.128 (3.25)	.5625-24	0.109 (2.77)	1.062 (26.97)
13	1.437 (36.50)	1.156 (29.36)	0.128 (3.25)	.6875-24	0.109 (2.77)	1.156 (29.36)
15	1.563 (39.70)	1.250 (31.75)	0.128 (3.25)	.8125-20	0.109 (2.77)	1.250 (31.75)
17	1.689 (42.90)	1.375 (34.92)	0.128 (3.25)	.9375-20	0.109 (2.77)	1.375 (34.92)
19	1.811 (46.00)	1.500 (38.10)	0.154 (3.91)	1.0625-18	0.140 (3.56)	1.500 (38.10)
21	1.952 (49.58)	1.625 (41.28)	0.154 (3.91)	1.1875-18	0.140 (3.56)	1.625 (41.28)
23	2.093 (53.16)	1.750 (44.45)	0.154 (3.91)	1.3125-18	0.140 (3.56)	1.750 (44.45)
25	2.234 (56.74)	1.875 (47.63)	0.154 (3.91)	1.4375-18	0.140 (3.56)	1.875 (47.63)

253-045-D0 Dimensions without Sealing						
SHELL SIZE	EE	JJ	NN	GG THREAD UNEF CLASS 2A	KK FLANGE THICKNESS	SS2
11	1.126 (28.60)	0.906 (23.01)	0.128 (3.25)	.5625-24	0.109 (2.77)	0.906 (23.01)
13	1.220 (30.99)	0.969 (24.61)	0.128 (3.25)	.6875-24	0.109 (2.77)	0.969 (24.61)
15	1.311 (33.30)	1.062 (26.97)	0.128 (3.25)	.8125-20	0.109 (2.77)	1.062 (26.97)
17	1.437 (36.50)	1.156 (29.36)	0.128 (3.25)	.9375-20	0.109 (2.77)	1.156 (29.36)
19	1.563 (39.70)	1.250 (31.75)	0.154 (3.91)	1.0625-18	0.140 (3.56)	1.250 (31.75)
21	1.689 (42.90)	1.375 (34.92)	0.154 (3.91)	1.1875-18	0.140 (3.56)	1.375 (34.92)
23	1.811 (46.00)	1.500 (38.10)	0.154 (3.91)	1.3125-18	0.140 (3.56)	1.500 (38.10)
25	1.952 (49.58)	1.625 (41.28)	0.154 (3.91)	1.4375-18	0.140 (3.56)	1.625 (41.28)

© 2018 Glenair, Inc • 1211 Air Way, Glendale, CA 91201 • 818-247-6000 • www.glenair.com • U.S. CAGE code 06324 • SuperNine® Catalog
Dimensions in Inches (millimeters) are subject to change without notice.

SuperNine® High-Speed Series

MIL-DTL-38999 Series III Type Space-Grade Connectors

253-047 & -048 Mis-alignment capable plug and receptacle

Part Number Development

Sample Part Number	253-047	D0	ME	25–8	A	N	-909	A
Series / Basic Part No.	**253** = Blind-mate connector with adjustable assisted separation force **–047** = Plug (fixed mount) **–048** = Receptacle (float mount)							
Connector Style	**-D0** = Wall mount, round holes							
Material/Finish	**ME** = Aluminum, electroless nickel **ZL** = CRES, electrodeposited nickel **MT** = Aluminum, nickel PTFE **Z1** = CRES, passivated							
Shell Size-Insert Arrangement	Per MIL-STD-1560							
Contact Type	**P** = Pin, crimp removable **S** = Socket, crimp removable							
Alternate Polarization (Per L°)	**A** = 40°, **B** = 65°, **C** = 80°, **D** = 210°, **E** =250°, **F** = 280°, **G** = 310°, **H**= 330°, **N** = 135° (Normal)							
Optional Mod Code	**909**** = Supplies connector with contacts							
Adjustment Ring Material	(Available for 253-048 receptacle only) **A** = Aluminum **C** = Corrosion-resistant steel							

***Refer to section A for complete details.** Refer to Space-Grade Guidelines material (IAW NASA EEE INST-002) for outgassing and screening modification codes, on pages 60 and 61. Modification codes may be added directly to the end of any valid part number

Modification code 909xx is used to supply D38999 Series III Type connectors featuring crimp removable type contacts with high-speed contact kits. Kits include spares, tools, and sealing plugs. See example below.

253-045-07ME25-8ANNS -909 C P

- Basic Connector Part Number
- Basic Modification Code **909**
- Contact Type Symbol (See Contact Type Table) **C, D, E*, Q, P, T**
- Contact Gender (Optional) **P** = Pin, **S** = Skt

*For El Ochito see Contact Configuration Table on following page for appropriate code and dash number symbol.

FIGURE 2: REFERENCE ORIENTATION OF INNER PINS RELATIVE TO CONNECTOR MAIN KEY/KEYWAY



DIFERENTIAL TWINAX QUADRAX EL OCHITO SIZE 8

Contact Type

Sym	Description	Glenair P/N	Wire Type	Grommet Follower	Application Notes
C	Size 16, contact for coax cable, per M39029/76 & /77;	Pin: 852-008-16-424 Skt: 852-009-16-428	RG174, RG316, RG179	N/A	Analog radio frequency or microwave applications
	Size 12, contact for coax cable, per M39029/102 & /103	Pin: 852-004-12-558 Skt: 852-005-12-559	RG174, RG316, RG179	N/A	
	Size 8, contact for coax cable, per M39029/59 & /60	Pin: 852-007-08-367 Skt: 852-006-08-366	M17 /95-RG180	859-042-02	
C1	Size 8, contact for 75 ohm coax cable	Pin: 852-056-01 Skt: 852-057-01	V73263, V75268, V76261	859-042-01	aerospace-grade digital video
D	Size 8, diff. twinax contact for 24 AWG twinax cable	Pin: 853-014-05 Skt: 853-013-05	M17 /176-00002	859-042-01	1553 databus / differential signal
E*	Size 8, El Ochito® contact for 26 AWG	White Pin: 858-003-02 Skt: 858-004-02	963-003-26 963-033-26	687-643-8-2	1G/10G Base-T Ethernet (white)
	Size 8, El Ochito® contact for 24/26-30 AWG Cable	**Blue** **Pin: 858-028-02** **Skt: 858-029-02**	963-110 & 963-118	687-643-8-2	USB 3.0 (Blue)
	Size 8, El Ochito® contact for 26-30 AWG Cable	**Red** **Pin: 858-030-02** **Skt: 858-031-02**	963-033-26	687-643-8-2	SATA 3.0 General High Speed (red)
Q	Size 8, contact for 24 AWG Quadrax	Pin: 854-001-02 Skt: 854-002-02	963-020	859-042-02	10/100Base-T ethernet
P	Size 8, power contact for 8 AWG	Pin: 850-014 Skt: 850-013	M22759/11 or equivalent	859-042-03	Power
T	Size 8, triax/ concentric twinax for twinax cable	Pin: 853-003-08-625 Skt: 853-004-08-628	M17 /176-00002	859-042-01	1553 Databus

* See Table II for Contact Positions. See Figure 2 for orientation of inner pins relative to connector main key/keyway.

© 2022 Glenair, Inc • 1211 Air Way, Glendale, CA 91201 • 818-247-6000 • www.glenair.com • U.S. CAGE code 06324 • SuperNine® Catalog
Dimensions in Inches (millimeters) are subject to change without notice.

SuperNine® High-Speed Series

MIL-DTL-38999 Series III Type Space-Grade Connectors

253-047 & -048 Mis-alignment capable plug and receptacle

El Ochito Protocols		
		
WHITE	**BLUE**	**RED**
10GBASE-T	USB 3.0	Multi Gigabit 100 ohm protocols HDMI, SATA, DisplayPort



Example Code E7



Example Code E5

PANEL TO PANEL DIMENSIONS

MATED JAM NUT MOUNT CONNECTORS

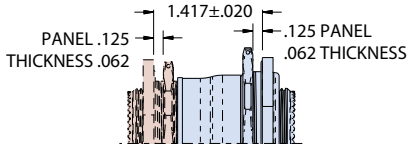

MATED WALLMOUNT CONNECTORS

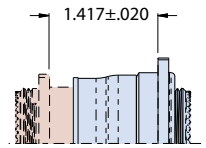

El Ochito Contact Configuration								
SYM	CAVITY A	CAVITY B	CAVITY C	CAVITY D	CAVITY E	CAVITY F	CAVITY G	CAVITY H
E	W	W	W	W	W	W	W	W
E2	B	W	W	W	W	W	W	W
E3	R	W	W	W	W	W	W	W
E4	B	B	W	W	W	W	W	W
E5	R	B	W	W	W	W	W	W
E6	R	R	W	W	W	W	W	W
E7	B	B	B	W	W	W	W	W
E8	R	B	B	W	W	W	W	W
E9	R	R	B	W	W	W	W	W
E10	R	R	R	W	W	W	W	W
E11	B	B	B	B	W	W	W	W
E12	R	B	B	B	W	W	W	W
E13	R	R	B	B	W	W	W	W
E14	R	R	R	B	W	W	W	W
E15	R	R	R	R	W	W	W	W
E16	B	B	B	B	B	W	W	W
E17	R	B	B	B	B	W	W	W
E18	R	R	B	B	B	W	W	W
E19	R	R	R	B	B	W	W	W
E20	R	R	R	R	B	W	W	W
E21	R	R	R	R	R	W	W	W
E22	B	B	B	B	B	B	W	W
E23	R	B	B	B	B	B	W	W
E24	R	R	B	B	B	B	W	W
E25	R	R	R	B	B	B	W	W
E26	R	R	R	R	B	B	W	W
E27	R	R	R	R	R	B	W	W
E28	R	R	R	R	R	R	W	W
E29	B	B	B	B	B	B	B	W
E30	R	B	B	B	B	B	B	W
E31	R	R	B	B	B	B	B	W
E32	R	R	R	B	B	B	B	W
E33	R	R	R	R	B	B	B	W
E34	R	R	R	R	R	B	B	W
E35	R	R	R	R	R	R	B	W
E36	R	R	R	R	R	R	R	W
E37	B	B	B	B	B	B	B	B
E38	R	B	B	B	B	B	B	B
E39	R	R	B	B	B	B	B	B
E40	R	R	R	B	B	B	B	B
E41	R	R	R	R	B	B	B	B
E42	R	R	R	R	R	B	B	B
E43	R	R	R	R	R	R	B	B
E44	R	R	R	R	R	R	R	B
E45	R	R	R	R	R	R	R	R

© 2022 Glenair, Inc • 1211 Air Way, Glendale, CA 91201 • 818-247-6000 • www.glenair.com • U.S. CAGE code 06324 • SuperNine® Catalog
Dimensions in Inches (millimeters) are subject to change without notice.

SuperNine® High-Speed Series

MIL-DTL-38999 Series III Type Space-Grade Connectors

253-047 & -048 Mis-alignment capable plug and receptacle

253-047-D0 FIXED WALL MOUNT PLUG WITH SPRING ASSIST (ZERO SEPARATION FORCE)

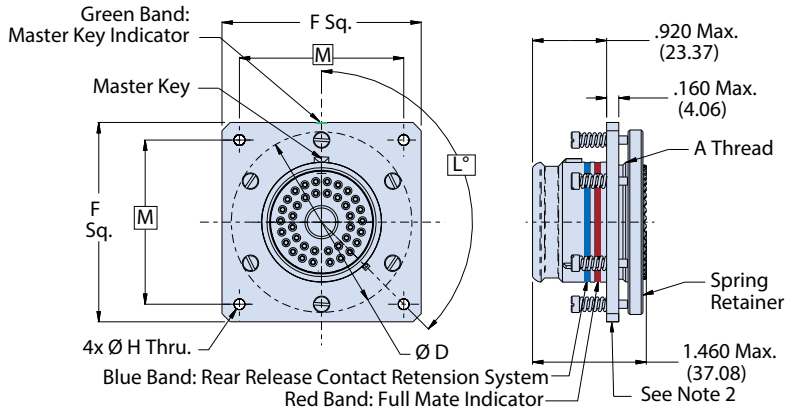

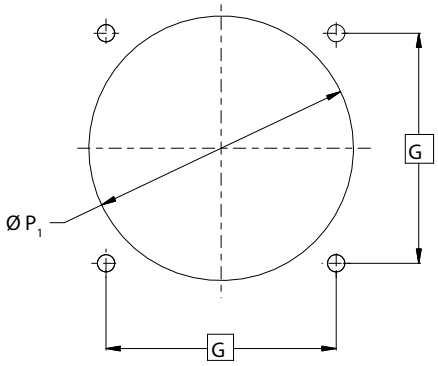

Recommended Panel Cut-out

253-048-D0 FLOATING WALL MOUNT RECEPTACLE WITH ADJUSTABLE SEPARATION FORCE AND MISALIGNMENT ACCOMMODATION

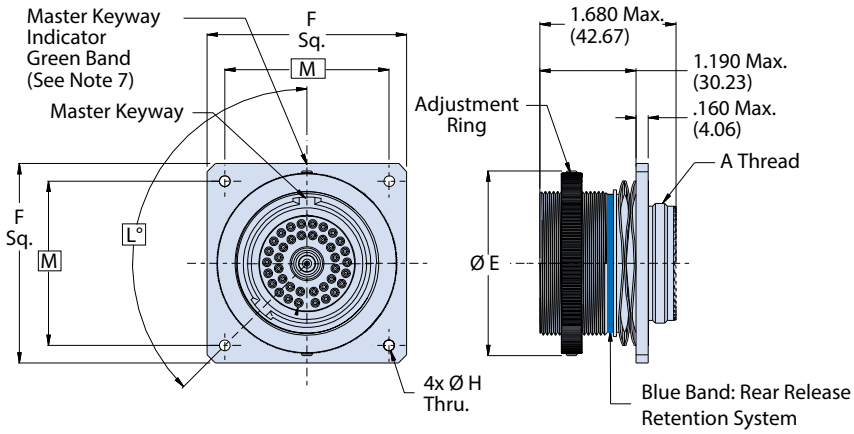

Recommended Panel Cut Out

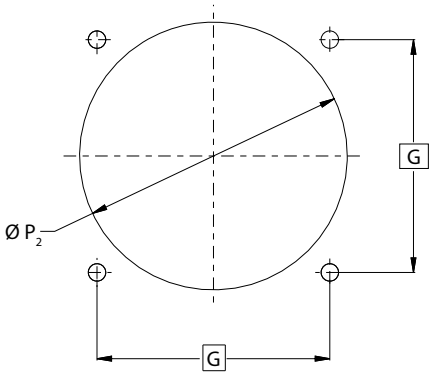

253-017 Misalignment Capabilities

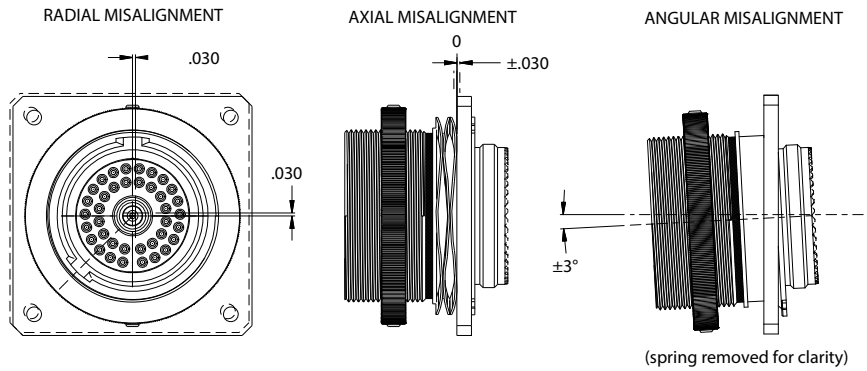

Adjustment Ring Geometry and Material Options

Contact manufacturer for other options

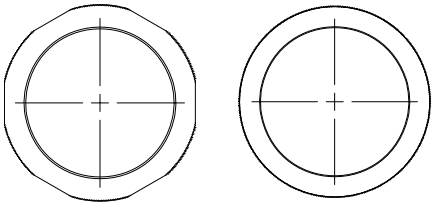

Corrosion Resistant
(With Wrench Flats)

Al Alloy

© 2022 Glenair, Inc • 1211 Air Way, Glendale, CA 91201 • 818-247-6000 • www.glenair.com • U.S. CAGE code 06324 • SuperNine® Catalog

Dimensions in Inches (millimeters) are subject to change without notice.

SuperNine® High-Speed Series

MIL-DTL-38999 Series III Type Space-Grade Connectors

253-047 & -048 Mis-alignment capable plug and receptacle

Dimensions for 253-047 and 253-048									
Shell Size	F Flange ±.010 (±.25)	M Square	Ø H ±.005 (±.13)	Ø D_1 Max.	Ø E Max.	A Thread	Ø P_1 ±.005 (±.13)	Ø P_2 ±.005 (±.13)	G Square
9	1.430(36.32)	1.150 (29.21)	.128(3.25)	1.250(31.75)	1.300 (33.02)	M12 X 1.0-6g-0.100R	1.300(33.02)	1.330 (33.78)	1.150 (29.21)
11	1.555(39.50)	1.200(30.48)	.128(3.25)	1.375(34.93)	1.425 (36.20)	M15 X 1.0-6g-0.100R	1.425(36.20)	1.455 (36.96)	1.200 (30.48)
13	1.680(42.67)	1.250(31.75)	.128(3.25)	1.500(38.10)	1.550 (39.37)	M18 X 1.0-6g-0.100R	1.550(39.37)	1.580 (40.13)	1.250 (31.75)
15	1.805(45.85)	1.375(34.93)	.128(3.25)	1.625(41.28)	1.675 (42.55)	M22 X 1.0-6g-0.100R	1.675(42.55)	1.705 (43.31)	1.375 (34.92)
17	1.930(49.02)	1.500(38.10)	.128(3.25)	1.750(44.45)	1.800 (45.72)	M25 X 1.0-6g-0.100R	1.800(45.72)	1.830 (46.48)	1.500 (38.10)
19	2.055(52.20)	1.625(41.28)	.128(3.25)	1.875(47.63)	1.925 (48.90)	M28 X 1.0-6g-0.100R	1.925(48.90)	1.955 (49.66)	1.625 (41.28)
21	2.180(55.37)	1.750(44.45)	.128(3.25)	2.000(50.80)	2.050 (52.07)	M31 X 1.0-6g-0.100R	2.050(52.07)	2.080 (52.83)	1.750 (44.45)
23	2.305(58.55)	1.875(47.63)	.154(3.91)	2.125(53.98)	2.175 (55.25)	M34 X 1.0-6g-0.100R	2.175(55.25)	2.205 (56.01)	1.875 (47.63)
25	2.430(61.72)	2.000(50.80)	.150(3.81)	2.250(57.15)	2.300 (58.42)	M37 X 1.0-6g-0.100R	2.300(58.42)	2.330 (59.18)	2.000 (50.80)

Distance between mated flanges.

For reference only
(not deliverable)

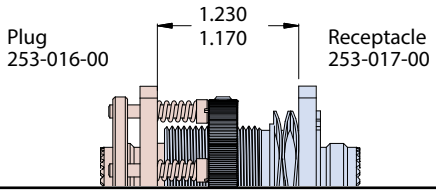

NOTES:

1. 253-047 mates with 253-048 fixed series.
2. Distance between mated mounting flanges: 1.170/1.230. Consult manufacturer other distance between mounting flanges is required
3. Separation force of 253-048 is adjustable ± 5 lbs when mated with 253-047. Contact factory for addtional force tolerances as they are based on insert arrangements per MIL-DTL-1560
4. See Space-Grade guidelines material, in this section, for outgassing/screening options available
5. Spares: pin or socket contacts IAW AS39029 or per Glenair part number if controlled force contacts
6. Contact factory for PC tail versions
7. Ground plane option only avaialble for insert arrangements where all contacts are shielded type
8. 253-047 and 253-048 connectors are rear panel mount only. Tolerance is as shown
9. Material/finish
   - Shell (016 and 017), ring (017), retainer ring (016): see P/N development, finish
   - Wave spring (017), springs and spring retainer (016): CRES/ passivated
   - Insulators: high grade rigid dielectric/N.A.
   - Seals: fluorosilicone blend/N.A.

© 2022 Glenair, Inc • 1211 Air Way, Glendale, CA 91201 • 818-247-6000 • www.glenair.com • U.S. CAGE code 06324 • SuperNine® Catalog
Dimensions in Inches (millimeters) are subject to change without notice.



10G ETHERNET PER CHANNEL

SpeedMaster™ Contact System

High-speed contact modules and inserts for use in MIL-DTL-38999 Series III connectors

SpeedMaster™ 10G is a dedicated contact module and interconnect insert package designed for use in MIL-DTL-38999 Series III type SuperNine™ connectors. SpeedMaster™ meets the unique installation, performance requirements, and use preferences of the aerospace industry. Optimized for high-speed Cat 6A Ethernet, the SpeedMaster™ 10G system offers industry-leading NEXT, return loss and insertion loss performance due to its highly-engineered isolation and separation architecture. Easy to assemble, terminate, install, and repair, the SpeedMaster™ 10G utilizes size #22D contacts, tools, and cable, and meets the broad range of aerospace industry requirements for vibration, temperature cycling, durability, and safe, reliable performance. Applications include defense, military and commercial aircraft electronics, in-flight entertainment, medical equipment, rail electronics systems, and industrial automation/robotics.

- **Utilizes aerospace industry standard #22D contacts, tools and widely available Ethernet flight cable**
- **Fast, easy termination**
- **Significant weight reduction compared to Quadrax solutions (reduces cable requirement by ½)**
- **High-density, repairable solution—ideally suited for today's high-performance mil-aero network environments**



SuperNine® Plug and Receptacle with SpeedMaster™ high-speed insert and contact modules

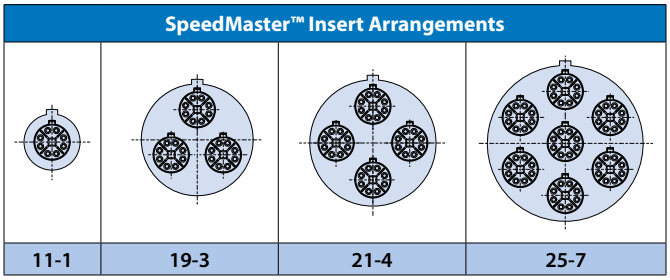

Available SpeedMaster™ insert arrangements for use in MIL-DTL-38999 Series III type SuperNine® connectors

© 2022 Glenair, Inc • 1211 Air Way, Glendale, CA 91201 • 818-247-6000 • www.glenair.com • U.S. CAGE code 06324 • SuperNine® Catalog
Dimensions in Inches (millimeters) are subject to change without notice.

ADVANCED PERFORMANCE

SuperNine® High-Speed Series

MIL-DTL-38999 Series III Type Environmental Connectors

SpeedMaster™ octaxial 10G, Cat 6A, size #22 contact system

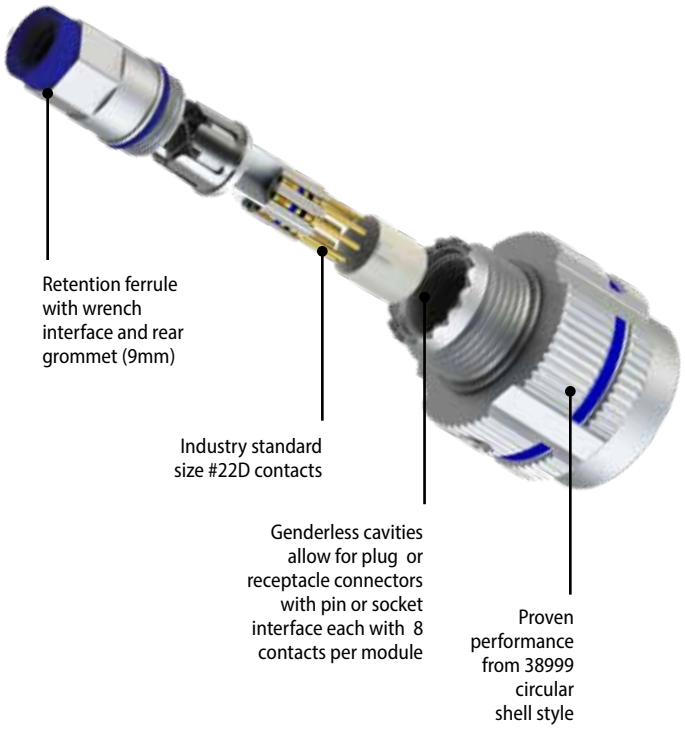

SPEEDMASTER™

The SpeedMaster™ Difference

SpeedMaster™ is a high-speed shielded contact and insert solution for SuperNine 38999 type connectors. SpeedMaster™ shielded contact modules incorporate 4 pairs of size #22D pins or sockets for full 10G Ethernet performance per module. Each module is individually shielded within the special shell insert, and retained in place with a threaded ferrule. Module cavities in the special SpeedMaster™ insert are genderless allowing both pin and socket interfaces for plugs or receptacles. Contact modules are easily removable and repairable, helping to reduce network downtime and improve network function and performance. Meet the demand for the next generation Cat 6A networks with SpeedMaster™, the next generation contact / connector system from Glenair. Hermetic versions also available see section D.

SPEEDMASTER™ 10G NEXT-GENERATION CONNECTION SYSTEM



SpeedMaster™ 10G modular inserts are available for Series 23 SuperNine – 38999, Series 80 Mighty Mouse – Locking Push / Pull and Series 28 HiPer-D – M24308 intermateable and Connectors



The SpeedMaster™ 10G is optimized for high-speed / Ethernet performance and incorporates standard M39029 #22D contacts isolated for superior NEXT, return loss and insertion loss performance

© 2022 Glenair, Inc • 1211 Air Way, Glendale, CA 91201 • 818-247-6000 • www.glenair.com • U.S. CAGE code 06324 • SuperNine® Catalog
Dimensions in Inches (millimeters) are subject to change without notice.

SuperNine® High-Speed Series

MIL-DTL-38999 Series III Type Environmental Connectors

Performance Specifications

Performance Specification, IAW MIL-DTL-32546, MIL-DTL-38999 Series III Rev. M, TIA-568-C.2, and Glenair SpeedMaster™

<table>
<tr><th>Test</th><th>Test Requirement</th><th>Requirement Met</th></tr>
<tr><td>High-speed Performance*</td><td>Individual contact modules meet the performance requirements of TIA-568-C.2:
• Return Loss • Insertion Loss • NEXT • PS NEXT
• ACR-F • PS ACR-F • ACR-N</td><td>Meets TIA-568-C.2, section 6.2</td></tr>
<tr><td>Temperature Cycling†</td><td>Mated connectors shall be tested as specified in EIA-364-32, Method A, Condition VI
-65°C to +200°C</td><td></td></tr>
<tr><td>Mating/Unmating Forces</td><td><table><tr><th rowspan="2">Shell Size</th><th colspan="2">Maximum Engagement & Disengagement</th><th colspan="2">Minimum Disengagement</th></tr><tr><th>Pound inch</th><th>Newton meters</th><th>Pound inch</th><th>Newton meters</th></tr><tr><td>11*</td><td>12</td><td>1.4</td><td>2</td><td>0.2</td></tr><tr><td>19‡</td><td>28</td><td>3.2</td><td>3</td><td>0.3</td></tr><tr><td>21‡</td><td>32</td><td>3.6</td><td>5</td><td>0.6</td></tr><tr><td>25*</td><td>40</td><td>4.6</td><td>5</td><td>0.6</td></tr></table></td><td>Meets MIL-DTL-38999, paragraph 3.11</td></tr>
<tr><td>Durability*</td><td>No electrical or mechanical defects after 500 cycles of engagement and disengagement</td><td>Meets MIL-DTL-32546, paragraph 3.11</td></tr>
<tr><td>Altitude Immersion</td><td>Mated connectors shall be tested as specified in EIA-364-03
75,000 ft equivalent</td><td></td></tr>
<tr><td>Insulation Resistance at Ambient Temperature*</td><td>Unmated connectors shall be tested as specified in EIA-364-21
5000 megaohms min. at 25°C</td><td>Meets MIL-DTL-32546, paragraph 3.13.1</td></tr>
<tr><td>Insulation Resistance at Elevated Temperature*</td><td>Unmated connectors shall be tested as specified in EIA-364-21
1000 megaohms min. at 200°C</td><td></td></tr>
<tr><td>Salt Spray‡</td><td><table><tr><th>Finish</th><th>Corrosion Resistance</th></tr><tr><td>Electroless Nickel (ME)</td><td>48 hrs</td></tr><tr><td>PTFE/Nickel (MT)</td><td>500 hrs</td></tr><tr><td>OD Cadmium (NF)</td><td>500 hrs</td></tr><tr><td>Black Zinc-Nickel (ZR)</td><td>500 hrs</td></tr></table></td><td>MIL-DTL-32546, paragraph 3.16
Finish ME: Meets
Finishes MT, NF, & ZR: Exceeds</td></tr>
<tr><td>Vibration, Sine</td><td>No discontinuity greater than 1 microsecond, no cracking, breaking, or loosening of parts, plug shall not become disengaged from the receptacle.
Connectors shall meet electrical requirements after test.
60 G's</td><td></td></tr>
<tr><td>Vibration, Random at Ambient Temperature*</td><td>No discontinuity greater than 1 microsecond, no cracking, breaking, or loosening of parts, plug shall not become disengaged from the receptacle.
Connectors shall meet electrical requirements after test.
49 G's rms</td><td>Meets MIL-DTL-32546, paragraph 3.21</td></tr>
<tr><td>Standard Shock*</td><td>No loosening of parts, cracking, or other deleterious results hindering further part operation after 300 G's in each of 3 mutually perpendicular planes</td><td>Meets MIL-DTL-32546, paragraph 3.22</td></tr>
<tr><td>High Impact Shock</td><td>Mated connectors equipped with straight environmentally sealed backshells shall withstand high impact shock per MIL-S-901, lightweight, Grade A</td><td></td></tr>
<tr><td>Shell-to-Shell Conductivity‡</td><td><table><tr><th>Finish</th><th>Maximum Millivolt Drop</th></tr><tr><td>Electroless Nickel (ME)</td><td>1.0 mv</td></tr><tr><td>PTFE/Nickel (MT)</td><td>2.5 mv</td></tr><tr><td>OD Cadmium (NF)</td><td>2.5 mv</td></tr><tr><td>Black Zinc-Nickel (ZR)</td><td>2.5 mv</td></tr></table></td><td>Exceeds MIL-DTL-32546, paragraph 3.23</td></tr>
</table>

© 2022 Glenair, Inc • 1211 Air Way, Glendale, CA 91201 • 818-247-6000 • www.glenair.com • U.S. CAGE code 06324 • SuperNine® Catalog
Dimensions in Inches (millimeters) are subject to change without notice.

Performance Specification, IAW MIL-DTL-32546, MIL-DTL-38999 Series III Rev. M, TIA-568-C.2, and Glenair SpeedMaster™		
Humidity*	Testing shall be performed as specified in EIA-364-21, Method IV	Meets MIL-DTL-32546, paragraph 3.25
Shielding Effectiveness‡	<table><tr><th rowspan="2">Frequency (MHz)</th><th colspan="2">Leakage Attenuation Min (dB)</th><th rowspan="2">Frequency (MHz)</th><th colspan="2">Leakage Attenuation Min (dB)</th></tr><tr><th>Finish ME</th><th>Finishes MT, NF, ZR</th><th>Finish ME</th><th>Finishes MT, NF, ZR</th></tr><tr><td>100</td><td>90</td><td>90</td><td>1,500</td><td>76</td><td>69</td></tr><tr><td>200</td><td>88</td><td>88</td><td>2,000</td><td>70</td><td>65</td></tr><tr><td>300</td><td>88</td><td>88</td><td>3,000</td><td>69</td><td>61</td></tr><tr><td>400</td><td>87</td><td>87</td><td>4,000</td><td>68</td><td>58</td></tr><tr><td>800</td><td>85</td><td>85</td><td>6,000</td><td>66</td><td>55</td></tr><tr><td>1,000</td><td>85</td><td>85</td><td>10,000</td><td>65</td><td>50</td></tr></table>	Meets MIL-DTL-32546, paragraph 3.27
Fluid Immersion	No visible damage from immersion in various fuels and oils. Electrical performance requirements shall still be met.	

* Indicates that test has been performed/data is available
† Thermal cycling has been done from -55°C to +200°C
‡ Qualification by similarity

38999 SPEEDMASTER SUMMARY

Standard Material and Finishes

- Shell, Barrel, Coupling Nut, Jam-nut: Aluminum alloy per ASTM-B211.
- Grounding spring: BeCu alloy/electroless nickel finish
- Seals, O-Ring: Fluorosilicone Blend

Shell Type and Sizes

- Shell Type: D38999 Series III Type, sizes 11, 19, 21, 25

© 2022 Glenair, Inc • 1211 Air Way, Glendale, CA 91201 • 818-247-6000 • www.glenair.com • U.S. CAGE code 06324 • SuperNine® Catalog
Dimensions in Inches (millimeters) are subject to change without notice.

SuperNine® High-Speed Series

MIL-DTL-38999 Series III Type Environmental Connectors

10GBASE-T Cat 6A Compliance Testing Contacts

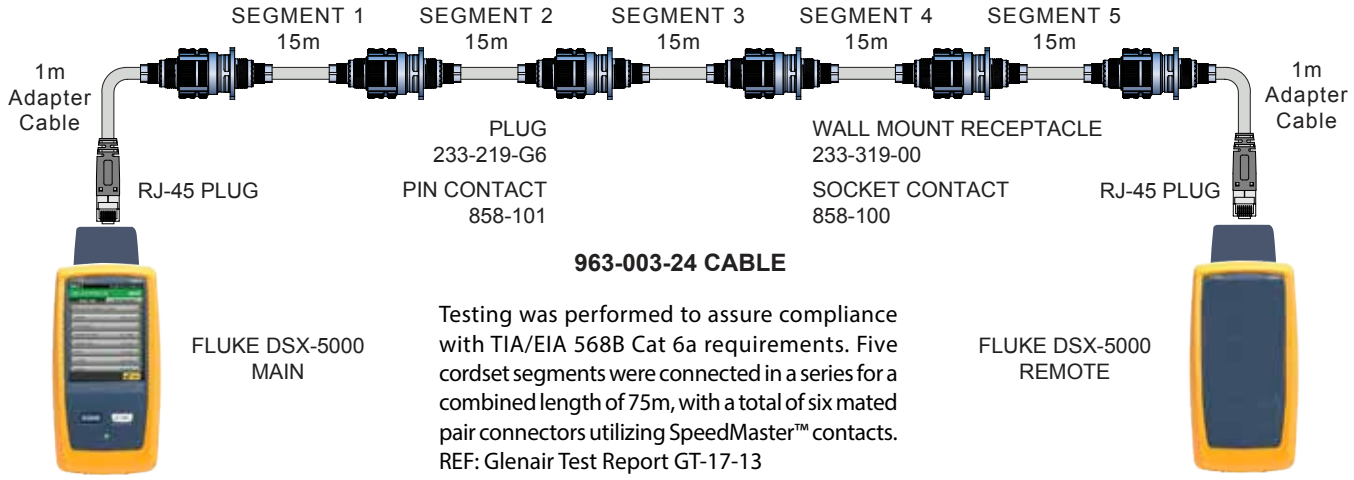

963-003-24 CABLE

Testing was performed to assure compliance with TIA/EIA 568B Cat 6a requirements. Five cordset segments were connected in a series for a combined length of 75m, with a total of six mated pair connectors utilizing SpeedMaster™ contacts. REF: Glenair Test Report GT-17-13

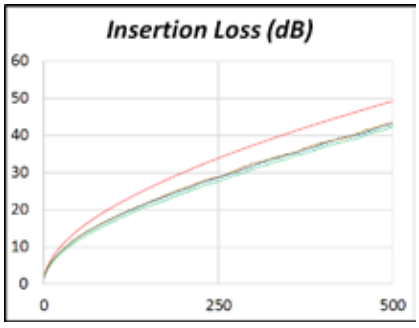

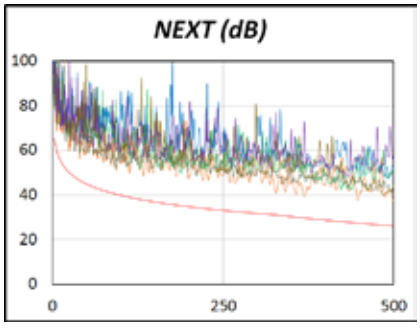

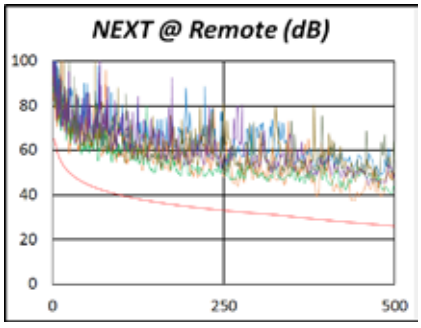

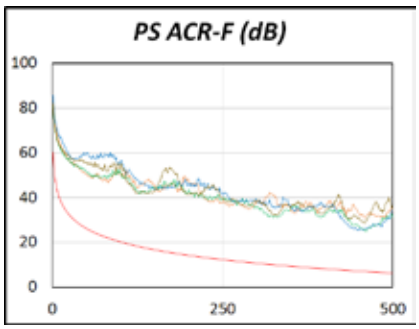

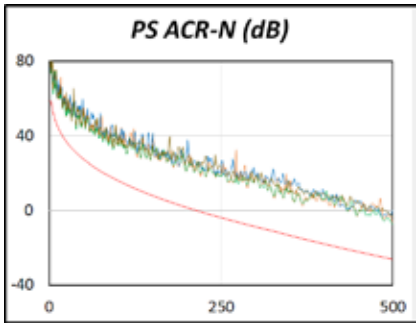

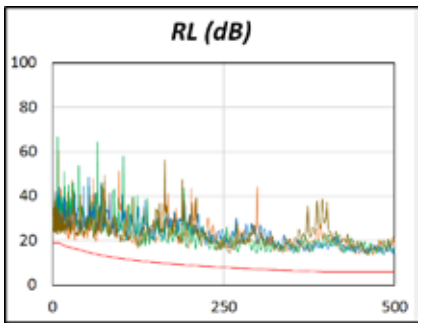

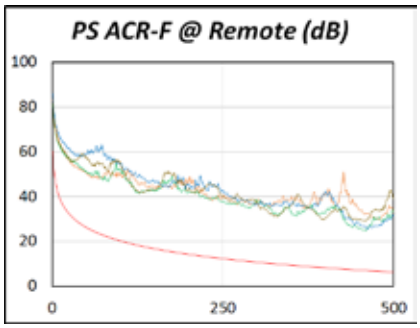

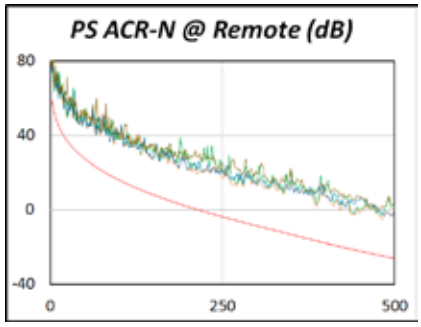

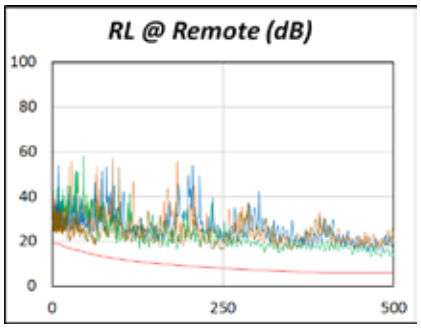

© 2022 Glenair, Inc • 1211 Air Way, Glendale, CA 91201 • 818-247-6000 • www.glenair.com • U.S. CAGE code 06324 • SuperNine® Catalog
Dimensions in Inches (millimeters) are subject to change without notice.

SuperNine® High-Speed Series

MIL-DTL-38999 Series III Type Environmental Connectors

858-100 and 858-101 SpeedMaster Cat 6A contacts

858-100 SPEEDMASTER™ SOCKET MODULE

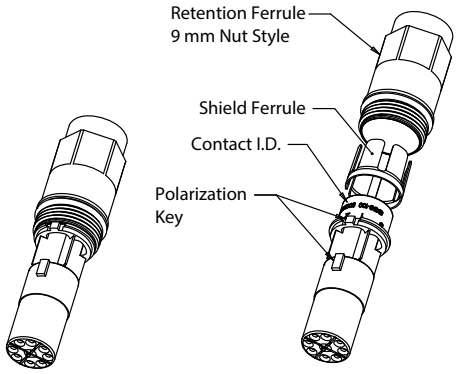

858	-100	-1
Product Code	Basic No	See Cable Size Table

Cable Size	
Cable Size	Cable Ø
1	.280 (7.11)
2	.270 (6.86)
3	.260 (6.60)
4	.250 (6.35)
5	.240 (6.10)
6	.230 (5.84)
7	.220 (5.59)

Speedmaster™ Module Inner Contact Pinout

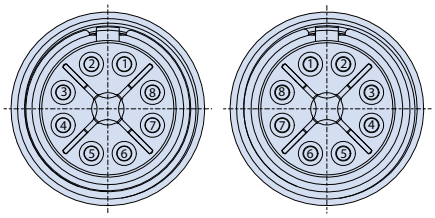

Pin Out	
Location	Color
1	Orng/Wht
2	Orange
3	Blu/Wht
4	Blue
5	Brwn/Wht
6	Brown
7	Grn/White
8	Green

858-101 SPEEDMASTER™ PIN MODULE

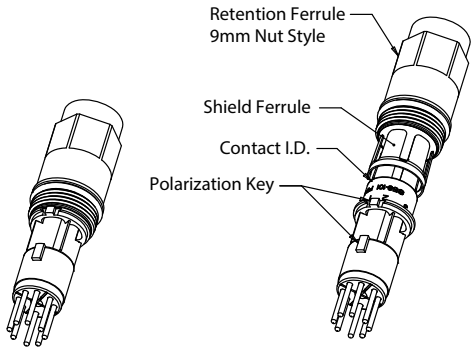

858	-101	-1
Product Code	Basic No	See Cable Size Table

NOTES

1. **IMPORTANT: SpeedMaster high-speed modules can only be installed in Glenair SpeedMaster series connectors.**
2. High-speed module is designed to accommodate cable with wire insulation up to Ø.055 inches and cable jackets up to Ø.280 inches. See cables table for suggest list.
3. For cables in-between sizes, select smaller size.
4. See AI85082 for assembly instructions
5. Tools Needed:
   - M39029/57-354 socket contacts:
     Basic tool M22520/2-01 (Glenair P/N 809-015)
     Positioner M22520/2-06 (Glenair P/N 859-019)
   - M39029/58-360 pin contacts:
     Basic tool M22520/2-01 (Glenair P/N 809-015)
     Positioner M22520/2-09 (Glenair P/N 859-018)
6. SpeedMaster insert arrangements are exclusive to SpeedMaster and are unrelated to other insert patterns of the same size and arrangement
7. Material/Finish
   - Isolator body - copper alloy / electroless nickel.
   - Contacts - copper alloy / gold plated
   - Retention ferrule - copper alloy / electroless nickel.
   - Inner shield ferrule: copper alloy / electroless nickel.
   - Insulators - rigid dielectric / N.A.
   - O-rings/grommets - fluorosilicone blend / N.A

Cables					
Cable P/N	Cable Category	Cable Construction	Wire Gage	Cable Ø	Assembly Instructions
963-003-24	CAT 6A	SF/UTP	24	.280 (7.11)	AI85082
963-003-26	CAT 6A	SF/UTP	26	.220 (5.59)	
963-037	CAT 6A	SF/UTP	24	.260 (6.60)	
963-033-24	CAT 6A	S/FTP	24	.260 (6.60)	
933-033-26	CAT 6A	S/FTP	26	.220 (5.59)	

*Consult factory for use with other cable

© 2022 Glenair, Inc • 1211 Air Way, Glendale, CA 91201 • 818-247-6000 • www.glenair.com • U.S. CAGE code 06324 • SuperNine® Catalog
Dimensions in Inches (millimeters) are subject to change without notice.

SuperNine® High-Speed Series

MIL-DTL-38999 Series III Type Environmental Connectors

8575-0001 SpeedMaster™ Cat 6A contacts, pre-wired



Technical Data

Specifications

- Operating temperature: -65°C to +200°C (SpeedMaster) or -40°C to +85°C (RJ45); cable dependent
- Meets EIA/TIA 568C.2-10 and IEC 60603-7-51 Cat 6A 500 MHz
- Characteristic Impedance: 100 ohms
- Insulation resistance: 200 megohms min.
- Durability: 500 mating cycles

SpeedMaster Construction

- **Isolator body**: copper alloy/electroless nickel
- **Contacts:** copper alloy, gold plated
- **Retention ferrule and shield ferrule**: copper alloy/electroless nickel
- **Insulator**: rigid plastic/N.A.
- **O-rings/grommets**: fluorosilicone blend/N.A.

RJ45 Construction

- **Body**: UL 94-V0 polycarbonate
- **Grommet**: UL 94-V0 polycarbonate
- **Contacts**: copper alloy, 50 microinches selective gold plating
- **Shield**: nickel-plated copper alloy

Connector Compatibility

- Glenair 824-009 and -010 Mighty Mouse
- Glenair 280-098 thru -103 HiPer-D
- Glenair 233-219 SuperNine

Contact Positions

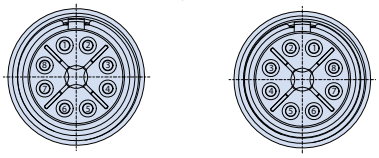

Mating Face of Pin Contacts	Mating Face of Socket Contacts

Notes

1. 100% tested for continuity, DWV and IR.
2. Not available in pin to pin or socket to socket configurations..

Pre-wired SpeedMaster assemblies are 100% tested and ready for use. For use with Series 23 SuperNine connectors with keyed size #8 cavities, these assemblies are available with three termination options: single-ended SpeedMaster contacts on one end, SpeedMaster contacts on both ends, or SpeedMaster contact on one end and RJ45 plug on the other end.

Part Number Development

Sample Part Number	8575-0001	-A	C	-1	-12
Product	**8575-0001**				
End A Contact Type*	**-A** = 858-101-X SpeedMaster pin **-B** = 858-100-X SpeedMaster socket				
End B Contact/ Connector*	**A** = SpeedMaster pin **B** = SpeedMaster socket **C** = RJ45 plug **N** = No connector				
Cable Option	**-1** = 963-003-24 **-5** = 963-033-24 **-2** = 963-003-26 **-6** = 963-033-26 **-4** = 963-037				
Length	Overall length in inches				

* Not available in pin to pin or socket to socket configurations

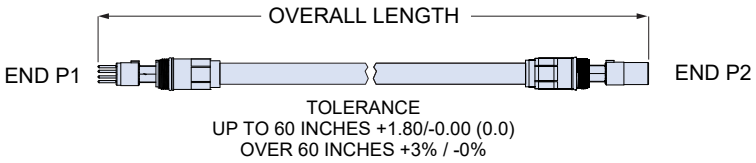

TOLERANCE
UP TO 60 INCHES +1.80/-0.00 (0.0)
OVER 60 INCHES +3% / -0%

Not available in pin to pin or socket to socket configurations

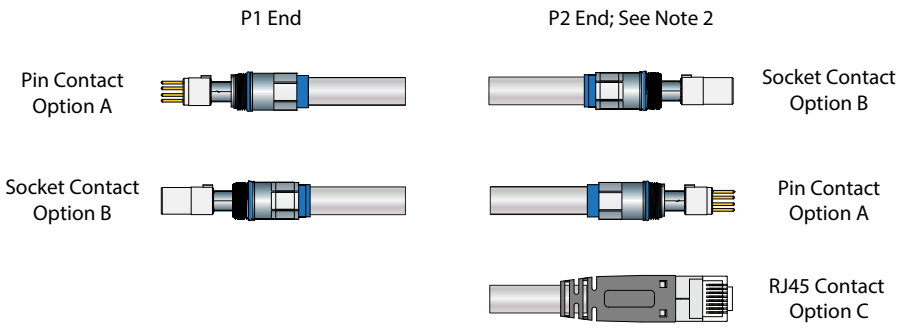

© 2022 Glenair, Inc • 1211 Air Way, Glendale, CA 91201 • 818-247-6000 • www.glenair.com • U.S. CAGE code 06324 • SuperNine® Catalog
Dimensions in Inches (millimeters) are subject to change without notice.

8575-0001 SPEEDMASTER™ WIRING DIAGRAMS

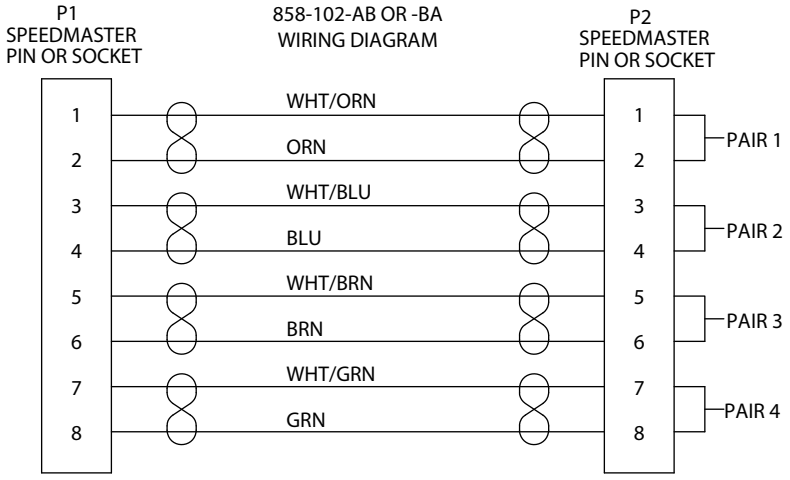

SPEEDMASTER TO SPEEDMASTER IS 1 TO 1.
MUST BE PIN TO SOCKET OR SOCKET TO PIN
OMIT P2 FOR 858-102-AN OR -BN

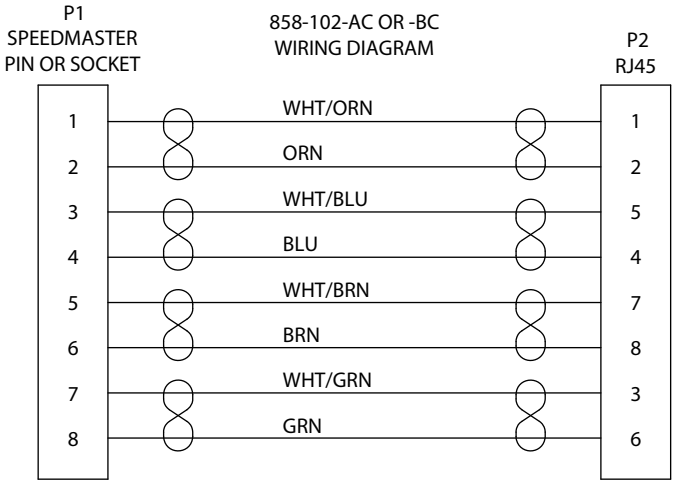

SPEEDMASTER PIN OR SOCKET TO RJ45 PLUG

© 2022 Glenair, Inc • 1211 Air Way, Glendale, CA 91201 • 818-247-6000 • www.glenair.com • U.S. CAGE code 06324 • SuperNine® Catalog
Dimensions in Inches (millimeters) are subject to change without notice.

SuperNine® High-Speed Series

MIL-DTL-38999 Series III Type Environmental Connectors

233-219 SpeedMaster™ plug and receptacle connectors

SpeedMaster™ Connector Part Number Development								
Sample Part Number	**233-219**	**–G6**	**ME**	**25**	**-7**	**P**	**N**	**-1**
Series / Basic Part No.	SuperNine Environmental High-Speed connector							
SpeedMaster™ Connector Style*	**G6** = Plug 38999/26 **05** = Receptacle, in-line **07** = Receptacle, jam-nut 38999/24 **00** = Receptacle, wall mount 38999/20 **CM** = Receptacle, wall mount, metric clinch nuts **CS** = Receptacle, wall mount, standard clinch nuts **D0** = Receptacle, wall mount, thru holes **T0** = Receptacle, wall mount, tapped holes **HM** = Receptacle, wall mount, metric helicoils **HS** = Receptacle, wall mount, standard helicoils							
Material/Finish	**NF** = Cadmium Olive Drab **ZR** = Black Zinc Nickel **MT** = Nickel PTFE **ME** = Electroless Nickel							
Shell Size	**11**, **19**, **21**, **25**							
Insert Arrangement	See Insert Arrangement Table							
Module Type	**P** = Pin **S** = Socket **A** = Less contacts; see note 1							
Alternate Polarization	**A**, **B**, **C**, **D**, **E**, **N** = Normal (IAW MIL-DTL-38999 Series III); See alternate positions table.							
Cable Size	See Cable Size Table for details; omit for pre-terminated contact modules							

SpeedMaster™ Insert Arrangements

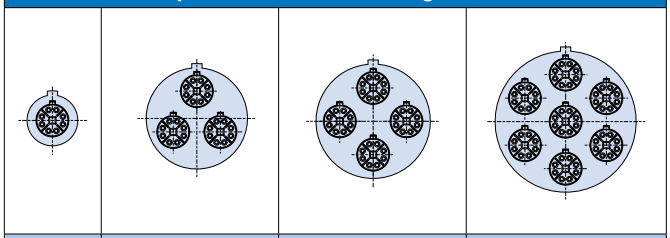

11-1	19-3	21-4	25-7

Alternate Positions

Shell Size Code	Shell Size	Position Code	AR° AP°	BR° BP°	CR° CP°	DR° DP°
B	11	N	95	141	208	236
		A	113	156	182	292
		B	90	145	195	252
		C	53	156	220	255
		D	119	146	176	298
		E	51	141	184	242
F G J	19 21 25	N	80	142	196	293
		A	135	170	200	310
		B	49	169	200	244
		C	66	140	200	257
		D	62	145	180	280
		E	79	153	197	272

Receptacle (Face)

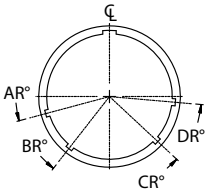

Plug (Face)

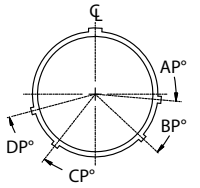

Cable Size

Cable Size	Cable Ø	Cable Size	Cable Ø
1	.280 (7.11)	5	.240 (6.10)
2	.270 (6.86)	6	.230 (5.84)
3	.260 (6.60)	7	.220 (5.59)
4	.250 (6.35)		

SpeedMaster™ High-Speed Cable

Cable P/N	Cabel Category	Cable Construction	Wire Gage	Cable Dia.	Assembly Instruction
963-003-24	Cat 6A	SF/UTP	24	.280	AI85082
963-003-26	Cat 6A	SF/UTP	26	.220	
963-037	Cat 6A	SF/UTP	24	.260	
963-033-24	CAT 6A	S/FTP	24	.260	
933-033-26	CAT 6A	S/FTP	26	.220	

NOTES

1. Spare High-Speed modules (858-100, 858-101) may be ordered separately. Module wrench tool (607-011) supplied with each connector. Select the "less contacts (A)" option when ordering pre-terminated cable to SpeedMaster contacts listed on page C-52. Omit cable size from part number development when selecting the "less contact" option from the module type of the part number development.
2. See assembly instructions AI85082 for high-speed module assembly. See assembly instructions A185086 for module installation.
3. Unless otherwise specified, all dimensions are per MIL-DTL-38999/20, /24 and /26
4. For cables in between sizes, select the smaller size
5. See page 8 for SpeedMaster module inner contact pinout
6. Glenair 233-219 connectors only accommodate Glenair SpeedMaster contacts.
7. SpeedMaster insert arrangements are exclusive to SpeedMaster and are unrelated to other insert patterns of the same size and arrangement

© 2022 Glenair, Inc • 1211 Air Way, Glendale, CA 91201 • 818-247-6000 • www.glenair.com • U.S. CAGE code 06324 • SuperNine® Catalog
Dimensions in Inches (millimeters) are subject to change without notice.

233-219-G6 PLUG D38999/26 TYPE

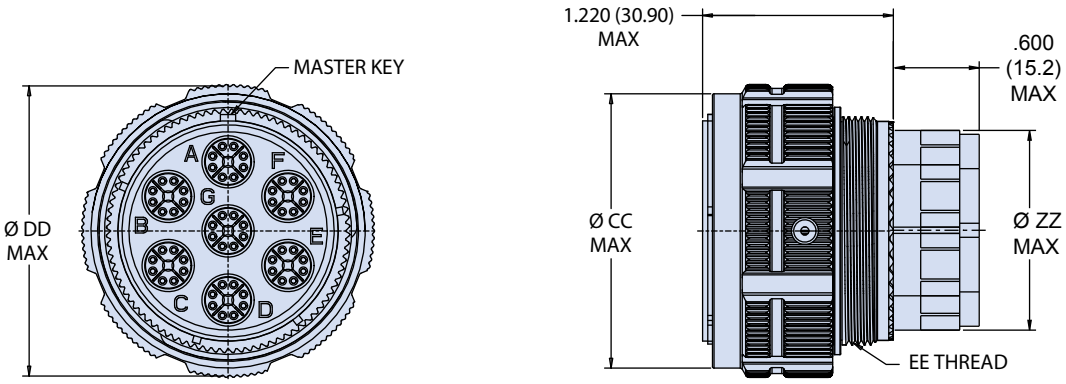

G6 Plug Per MIL-DTL-38999/26					
Shell Size Code	Shell Size	Ø CC Max	Ø DD Max	EE Thread	Ø ZZ Max
B	11	.929 (23.60)	.984 (24.99)	M15x1.0-6g 0.100R	.405 (10.29)
F	19	1.469 (37.31)	1.516 (38.51)	M28x1.0-6g 0.100R	.885 (22.48)
G	21	1.594 (40.49)	1.642 (41.71)	M31x1.0-6g 0.100R	.845 (21.46)
J	25	1.843 (46.81)	1.890 (48.01)	M37x1.0-6g 0.100R	1.285 (32.64)

233-219-05 IN-LINE RECEPTACLE

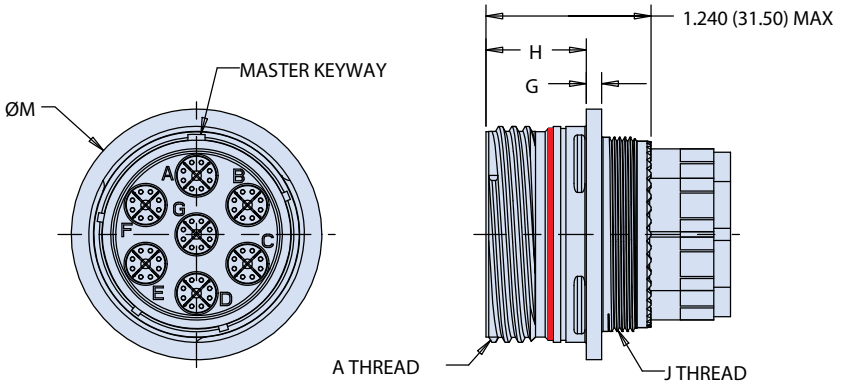

05 In-Line Receptacle						
Shell Size Code	Shell Size	A Thread	G	H	J THREAD	ØM
B	11	.7500-.1P-.3L-TS-2A	.098 (2.49) .083 (2.11)	.820 (20.83) .771 (19.58)	M15x1.0-6g 0.100R	.984 (24.99)
F	19	1.2500-.1P-.3L-TS-2A			M28x1.0-6g 0.100R	1.516 (38.51)
G	21	1.3750-.1P-.3L-TS-2A	.126 (3.20) .083 (2.11)	.790 (20.07) .741 (18.82)	M31x1.0-6g 0.100R	1.642 (41.71)
J	25	1.6250-.1P-.3L-TS-2A			M37x1.0-6g 0.100R	1.890 (48.01)

© 2022 Glenair, Inc • 1211 Air Way, Glendale, CA 91201 • 818-247-6000 • www.glenair.com • U.S. CAGE code 06324 • SuperNine® Catalog
Dimensions in Inches (millimeters) are subject to change without notice.

233-219-07 JAM-NUT MOUNT RECEPTACLE, D38999/24 TYPE

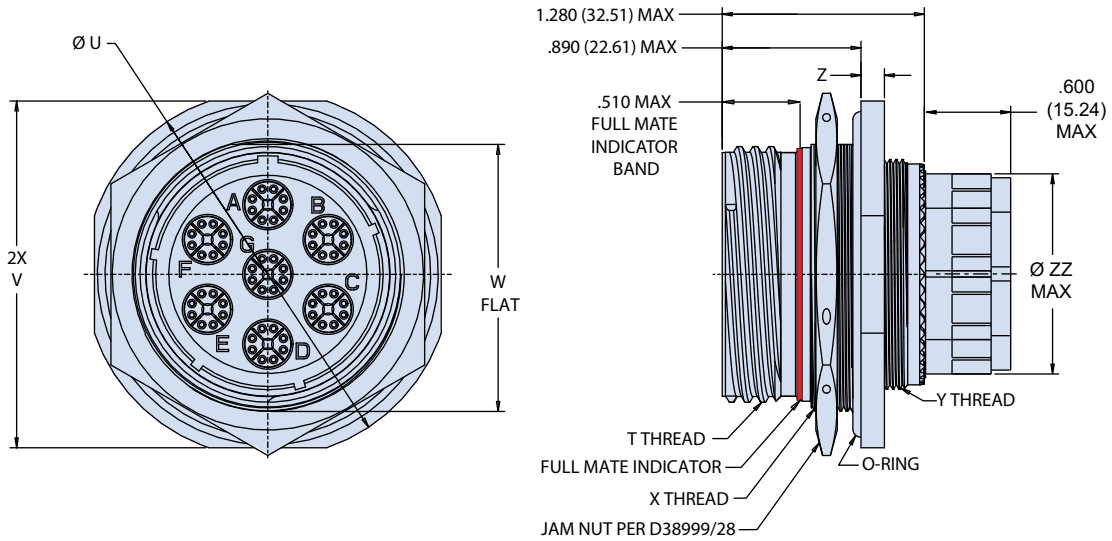

07 Jam-Nut Per MIL-DTL-38999/24									
Shell Size Code	Shell Size	T Thread	U	V	W Flat	X Thread	Y Thread	Z	ZZ Max
B	11	.7500-.1P-.3L-TS-2A	1.385 (35.18) 1.363 (34.62)	1.267 (32.18) 1.237 (31.42)	0.756 (19.20) 0.746 (18.95)	M20x1.0-6g 0.100R	M15x1.0-6g 0.100R	.122 (3.10) .083 (2.11)	.405 (10.29)
F	19	1.2500-.1P-.3L-TS-2A	1.949 (49.50) 1.925 (48.89)	1.827 (46.41) 1.795 (45.59)	1.316 (33.43) 1.306 (33.17)	M35x1.0-6g 0.100R	M28x1.0-6g 0.100R	.153 (3.89) .114 (2.90)	.885 (22.48)
G	21	1.3750-.1P-.3L-TS-2A	2.075 (52.70) 2.051 (52.10)	1.953 (49.61) 1.921 (48.79)	1.441 (36.60) 1.431 (36.35)	M38x1.0-6g 0.100R	M31x1.0-6g 0.100R		.845 (21.46)
J	25	1.6250-.1P-.3L-TS-2A	2.323 (59.00) 2.299 (58.39)	2.205 (56.01) 2.173 (55.19)	1.691 (42.95) 1.681 (42.70)	M44x1.0-6g 0.100R	M37x1.0-6g 0.100R		1.285 (32.64)

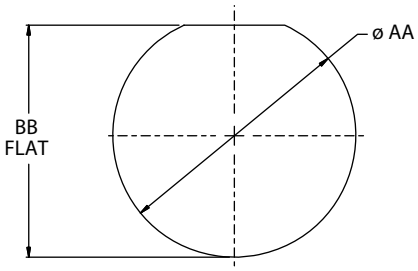

RECOMMENDED PANEL CUT OUT
FOR JAM NUT RECEPTACLES

Mounting Holes Per MIL-DTL-38999			
Shell Size Size	Shell Size	Ø AA	BB Flat
B	11	0.835 (21.21) 0.825 (20.95)	0.771 (19.58) 0.761 (19.33)
F	19	1.395 (35.43) 1.385 (35.18)	1.335 (33.91) 1.325 (33.65)
G	21	1.520 (38.61) 1.510 (38.35)	1.460 (37.08) 1.450 (36.83)
J	25	1.770 (44.96) 1.760 (44.70)	1.710 (43.43) 1.700 (43.18)

© 2022 Glenair, Inc • 1211 Air Way, Glendale, CA 91201 • 818-247-6000 • www.glenair.com • U.S. CAGE code 06324 • SuperNine® Catalog
Dimensions in Inches (millimeters) are subject to change without notice.

SuperNine® High-Speed Series

MIL-DTL-38999 Series III Type Environmental Connectors

233-219 SpeedMaster™ plug and receptacle connectors

233-219-00 SLOTTED HOLE, D38999/20 TYPE

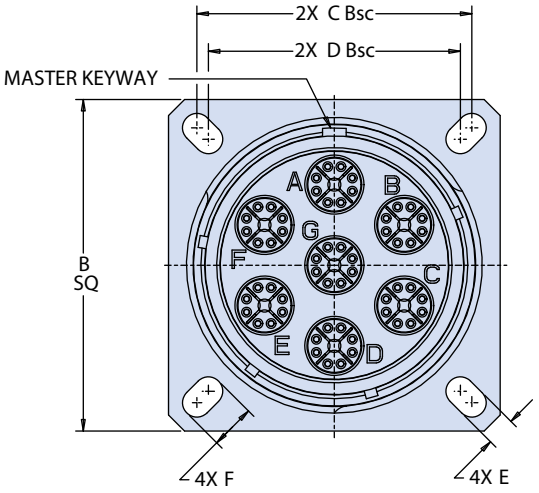

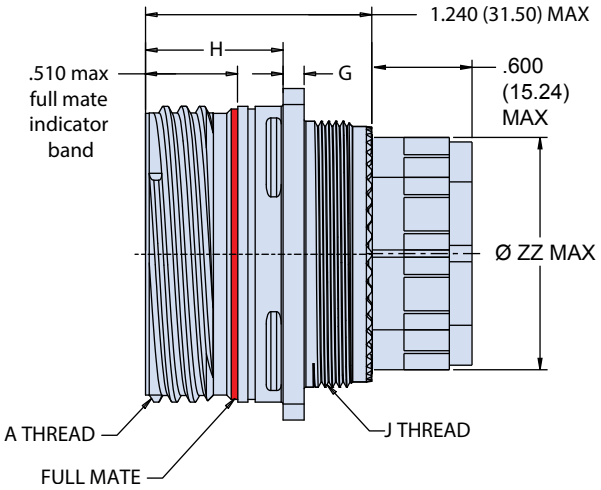

00 Wall Mount Per MIL-DTL-38999/20											
Shell Size Code	Shell Size	A Thread	B SQ	C BSC	D BSC	E	F	G	H	J THREAD	ZZ Max
B	11	.7500-.1P-.3L-TS-2A	1.043 (26.49) 1.019 (25.88)	.812 (20.62)	.719 (18.26)	.136 (3.45) .120 (3.05)	.198 (5.03) .190 (4.83)	.098 (2.49) .083 (2.11)	.820 (20.83) .771 (19.58)	M15x1.0-6g 0.100R	.405 (10.29)
F	19	1.2500-.1P-.3L-TS-2A	1.449 (36.80) 1.425 (36.20)	1.156 (29.36)	1.062 (26.97)		.202 (5.13) .186 (4.72)			M28x1.0-6g 0.100R	.885 (22.48)
G	21	1.3750-.1P-.3L-TS-2A	1.575 (40.00) 1.551 (39.40)	1.250 (31.75)	1.156 (29.36)			.126 (3.20) .083 (2.11)	.790 (20.07) .741 (18.82)	M31x1.0-6g 0.100R	.845 (21.46)
J	25	1.6250-.1P-.3L-TS-2A	1.823 (46.30) 1.799 (45.69)	1.500 (38.10)	1.375 (34.92)	.162 (4.11) .142 (3.61)	.250 (6.35) .234 (5.94)			M37x1.0-6g 0.100R	1.285 (32.64)

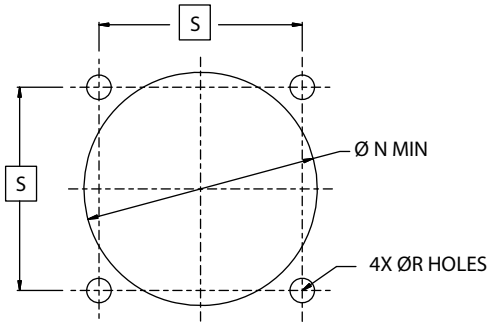

Mounting Holes Per MIL-DTL-38999				
Shell Size Size	Shell Size	Ø N Min	Ø R Holes	S BSC
B	11	.796 (20.22)	.133 (3.38) .123 (3.12)	.812 (20.62)
F	19	1.297 (32.94)		1.156 (29.36)
G	21	1.422 (36.12)		1.250 (31.75)
J	25	1.672 (42.47)	.155 (3.94) .145 (3.68)	1.500 (38.10)

RECOMMENDED MOUNTING HOLES FOR WALL MOUNT (00) RECEPTACLES PER MIL-DTL-38999.

© 2022 Glenair, Inc • 1211 Air Way, Glendale, CA 91201 • 818-247-6000 • www.glenair.com • U.S. CAGE code 06324 • SuperNine® Catalog
Dimensions in Inches (millimeters) are subject to change without notice.

233-219-CS CLINCH NUT STANDARD OR 233-219-CM CLINCH NUT METRIC AND 233-219-D0 DRILLED HOLES AND 233-219-T0 TAPPED HOLES

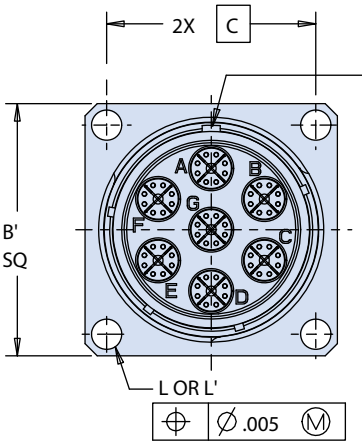

CM & CS STYLE

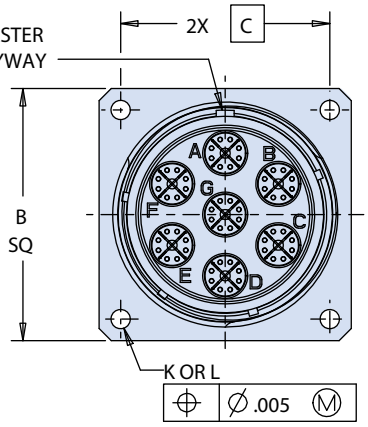

D0 & T0 STYLE

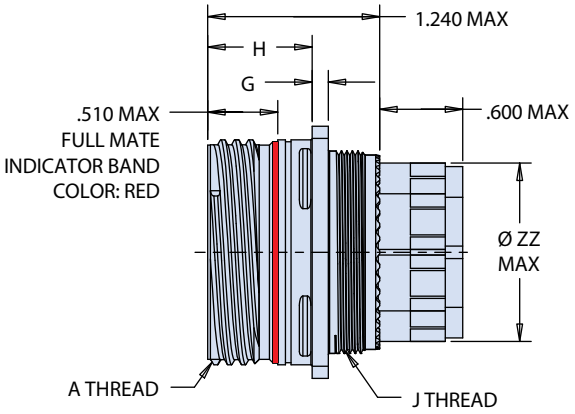

CM, CS, D0, & T0 STYLE

CM, CS, DO and TO Wall Mount												
Shell Size Code	Shell Size	A Thread	B SQ	B′ SQ	C BSC	G	H	J THREAD	ØK	L Standard	L′ Metric	ZZ Max
B	11	.7500-.1P-.3L-TS-2A	1.043 (26.49) 1.019 (25.88)	1.187 (30.15) 1.147 (29.13)	.812 (20.62)	.098 (2.49) .083 (2.11)	.820 (20.83) .771 (19.58)	M15x1.0-6g 0.100R	.136 (3.45) .120 (3.05)	.112-40 UNC-2B	M3 x 0.5	.405 (10.29)
F	19	1.2500-.1P-.3L-TS-2A	1.449 (36.80) 1.425 (36.20)	1.531 (38.89) 1.491 (37.87)	1.156 (29.36)			M28x1.0-6g 0.100R				.885 (22.48)
G	21	1.3750-.1P-.3L-TS-2A	1.575 (40.00) 1.551 (39.40)	1.625 (41.28) 1.585 (40.26)	1.250 (31.75)	.126 (3.20) .083 (2.11)	.790 (20.07) .741 (18.82)	M31x1.0-6g 0.100R				.845 (21.46)
J	25	1.6250-.1P-.3L-TS-2A	1.823 (46.30) 1.799 (45.69)	1.875 (47.63) 1.835 (46.61)	1.500 (38.10)			M37x1.0-6g 0.100R	.162 (4.11) .146 (3.71)	.138-32 UNC-2B	M4 x 0.7	1.285 (32.64)

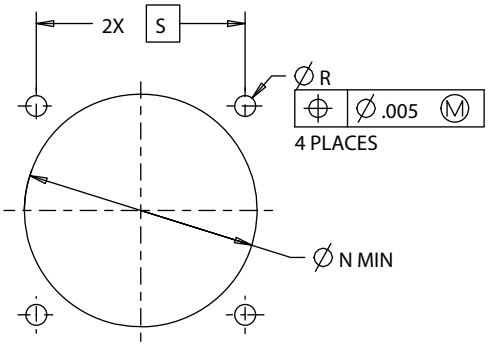

Mounting Holes				
Shell Size Size	Shell Size	Ø N Min	Ø R Holes	S BSC
B	11	.796 (20.22)	.133 (3.38) .123 (3.12)	.812 (20.62)
F	19	1.297 (32.94)		1.156 (29.36)
G	21	1.422 (36.12)		1.250 (31.75)
J	25	1.672 (42.47)	.155 (3.94) .145 (3.68)	1.500 (38.10)

© 2022 Glenair, Inc • 1211 Air Way, Glendale, CA 91201 • 818-247-6000 • www.glenair.com • U.S. CAGE code 06324 • SuperNine® Catalog
Dimensions in Inches (millimeters) are subject to change without notice.

HELICOILS STANDARD (HS) AND METRIC (HM)

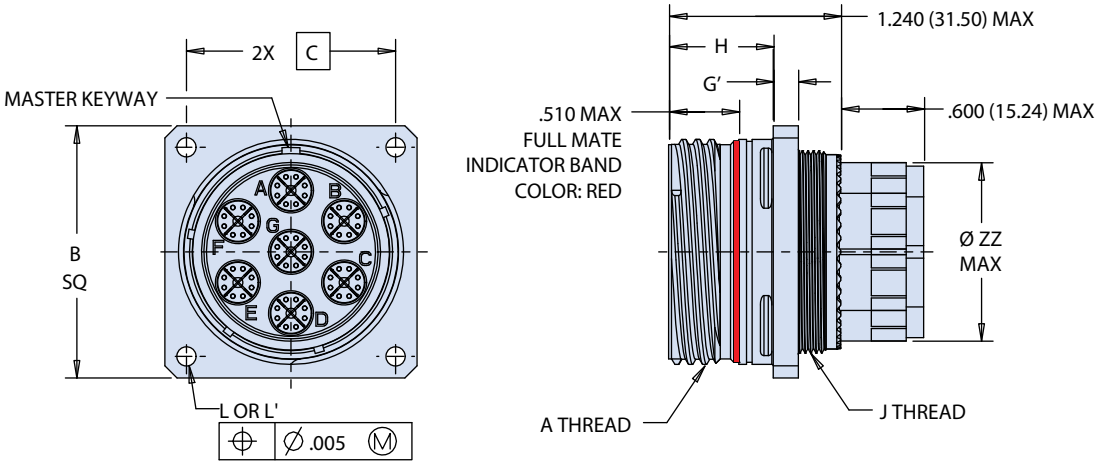

HM & HS STYLE

HM and HS Wall Mount										
Shell Size Code	Shell Size	A Thread	B SQ	C BSC	G′	H	J THREAD	L Thread (Standard)	L′ Thread (Metric)	ZZ Max
B	11	.7500-.1P-.3L-TS-2A	1.043 (26.49) 1.019 (25.88)	.812 (20.62)	.179 (4.55) .140 (3.56)	.820 (20.83) .771 (19.58)	M15x1.0-6g 0.100R	.112-40 UNC-2B	M3 x 0.5	.405 (10.29)
F	19	1.2500-.1P-.3L-TS-2A	1.449 (36.80) 1.425 (36.20)	1.156 (29.36)			M28x1.0-6g 0.100R			.885 (22.48)
G	21	1.3750-.1P-.3L-TS-2A	1.575 (40.00) 1.551 (39.40)	1.250 (31.75)		.790 (20.07) .741 (18.82)	M31x1.0-6g 0.100R			.845 (21.46)
J	25	1.6250-.1P-.3L-TS-2A	1.823 (46.30) 1.799 (45.69)	1.500 (38.10)	.190 (4.83) .170 (4.32)		M37x1.0-6g 0.100R	.138-32 UNC-2B	M4 x 0.7	1.285 (32.64)

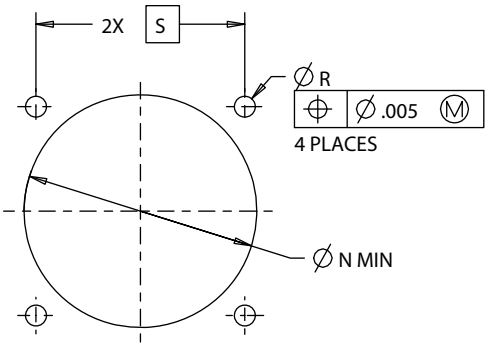

Mounting Holes				
Shell Size Size	Shell Size	Ø N Min	Ø R Holes	S BSC
B	11	.796 (20.22)	.133 (3.38) .123 (3.12)	.812 (20.62)
F	19	1.297 (32.94)		1.156 (29.36)
G	21	1.422 (36.12)		1.250 (31.75)
J	25	1.672 (42.47)	.155 (3.94) .145 (3.68)	1.500 (38.10)

© 2018 Glenair, Inc • 1211 Air Way, Glendale, CA 91201 • 818-247-6000 • www.glenair.com • U.S. CAGE code 06324 • SuperNine® Catalog
Dimensions in Inches (millimeters) are subject to change without notice.

SuperNine® High-Speed Series

MIL-DTL-38999 Series III Type Environmental Connectors

233-220 Receptacle with SpeedMaster™ 10G PC tail contacts

Part Number Development							
Sample Part Number	**233-220**	**-07**	**ME**	**25**	**-7**	**P**	**N**
Series / Basic Part No.	SuperNine Environmental High-Speed connector						
Connector Style*	See connector type table						
Material/Finish	**NF** = Cadmium Olive Drab **ZR** = Black Zinc Nickel **MT** = Nickel PTFE **ME** = Electroless Nickel						
Shell Size	**11**, **19**, **21**, **25**						
Insert Arrangement	See Insert Arrangement Table						
Module Type	**P** = Pin **S** = Socket						
Alternate Polarization	**A**, **B**, **C**, **D**, **E**, **N** = Normal (IAW MIL-DTL-38999 Series III); See alternate positions table.						



Socket Module



Pin Module

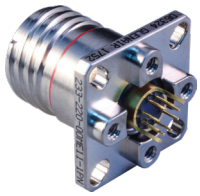

Connector Style	
Symbol	**Description**
00	Wall mount receptacle with slotted holes, standard standoff threads
10	Wall mount receptacle with slotted holes, metric standoff threads
CM	Wall mount receptacle with metric clinch nuts
CS	Wall mount receptacle with standard clinch nuts
HM	Wall mount receptacle with metric helicoils
HS	Wall mount receptacle with standard helicoils
07	Jam-nut receptacle

Alternate Positions

Keyway Positions (Receptacle)

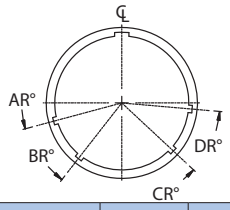

Shell Size Code	Shell Size	Alternate Position Code	AR°	BR°	CR°	DR°
B	11	N	95	141	208	236
		A	113	156	182	292
		B	90	145	195	252
		C	53	156	220	255
		D	119	146	176	298
		E	51	141	184	242
F G J	19 21 25	N	80	142	196	293
		A	135	170	200	310
		B	49	169	200	244
		C	66	140	200	257
		D	62	145	180	280
		E	79	153	197	272

Insert Arrangements

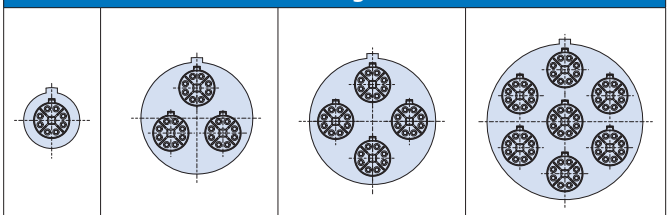

11-1	19-3	21-4	25-7

NOTES

1. Mates with Glenair 233-219-G6, D38999 SpeedMaster plug of same keying and insert arrangement. Mating connector must be 1.5 meter minimum cable length
2. Material/finish
   - Shell, jam-nut: see part number development
   - Insert: Aluminum alloy/ silver
   - Seals, o-ring: Fluorosilicone blend/n.a.
   - Insulators: rigid dielectric/n.a.
   - Contacts: copper alloy/gold
   - Potting: epoxy/n.a.

© 2022 Glenair, Inc • 1211 Air Way, Glendale, CA 91201 • 818-247-6000 • www.glenair.com • U.S. CAGE code 06324 • SuperNine® Catalog
Dimensions in Inches (millimeters) are subject to change without notice.

Rev. 06.27.24

SuperNine® High-Speed Series

MIL-DTL-38999 Series III Type Environmental Connectors

233-220 Receptacle with SpeedMaster™ 10G PC tail contacts

233-263 WALL MOUNT WITH SLOTTED HOLES AND STANDARD (00) OR METRIC (10) STANDOFF THREADS, STANDARD (CS) OR METRIC (CM) CLINCH NUTS, OR STANDARD HELICOILS (HS) OR METRIC HELICOILS (HM)

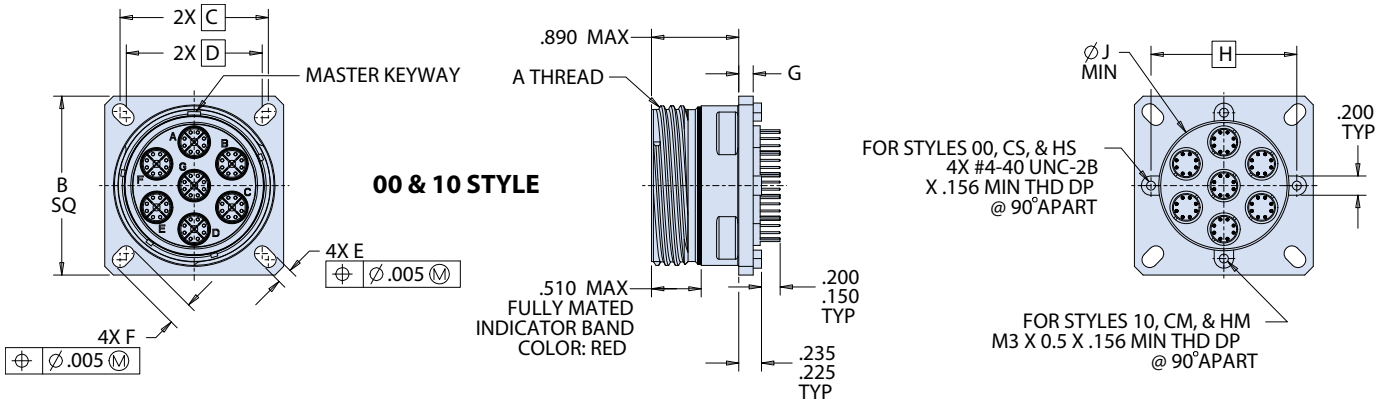

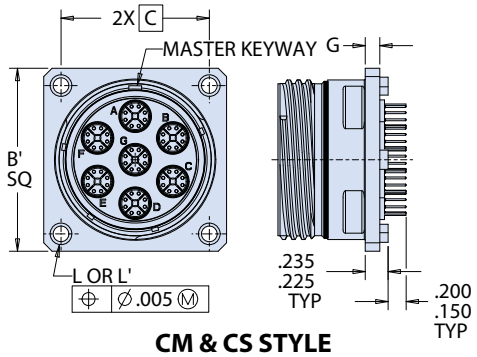

CM & CS STYLE

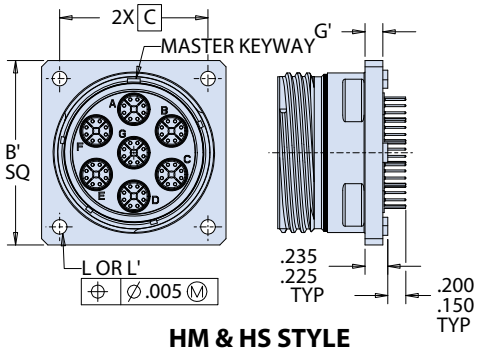

HM & HS STYLE

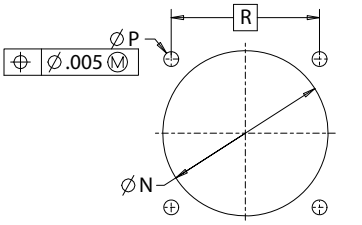

SEE MOUNTING HOLE DIMENSIONS

Dimensions													
Shell Size	A Thread	B Sq	B' Sq	C Bsc	D Bsc	E	F	G	G'	H	ØJ Min	Thread L	Thread L'
11	.7500 -0.1P-0.3L-TS-2A	1.043 (26.49) 1.019 (25.88)	1.187 (30.15) 1.147 (29.13)	.812 (20.62)	.719 (18.26)	.136 (3.45) .120 (3.05)	.202 (5.13) .186 (4.72)	.122 (3.10) .083 (2.11)	.179 (4.55) .140 (3.56)	.719 (18.26)	.468 (11.89)	.112-40 UNC-2B	M3 x 0.5
19	1.2500 -0.1P-0.3L-TS-2A	1.449 (36.80) 1.425 (36.20)	1.531 (38.89) 1.491 (37.87)	1.156 (29.36)	1.062 (26.97)					1.15 (29.21)	.935 (23.75)		
21	1.3750 -0.1P-0.3L-TS-2A	1.575 (40.00) 1.551 (39.40)	1.625 (41.28) 1.585 (40.26)	1.250 (31.75)	1.156 (29.36)			.153 (3.89) .114 (2.90)		1.221 (31.01)	1.055 (26.80)		
25	1.6250 -0.1P-0.3L-TS-2A	1.823 (46.30) 1.799 (45.69)	1.875 (47.63) 1.835 (46.61)	1.500 (38.10)	1.375 (34.92)	.162 (4.11) .146 (3.71)	.250 (6.35) .235 (5.97)		.190 (4.83) .179 (4.55)	1.475 (37.47)	1.307 (33.20)	.138-32 UNC-2B	M4 x 0.7

Mounting Hole Dimensions			
Shell Size	ØN Min	Ø P Holes	R Bsc
11	0.796 (20.22)	0.133 (3.38) 0.123 (3.12)	0.812 (20.62)
19	1.297 (32.94)		1.156 (29.36)
21	1.422 (36.12)		1.250 (31.75)
25	1.672 (42.47)	0.155 (3.94) 0.145 (3.68)	1.500 (38.10)

© 2022 Glenair, Inc • 1211 Air Way, Glendale, CA 91201 • 818-247-6000 • www.glenair.com • U.S. CAGE code 06324 • SuperNine® Catalog
Dimensions in Inches (millimeters) are subject to change without notice.

SuperNine® High-Speed Series

MIL-DTL-38999 Series III Type Environmental Connectors

233-220 Receptacle with SpeedMaster™ 10G PC tail contacts

233-220-07- JAM-NUT MOUNT RECEPTACLE D38999/24 TYPE

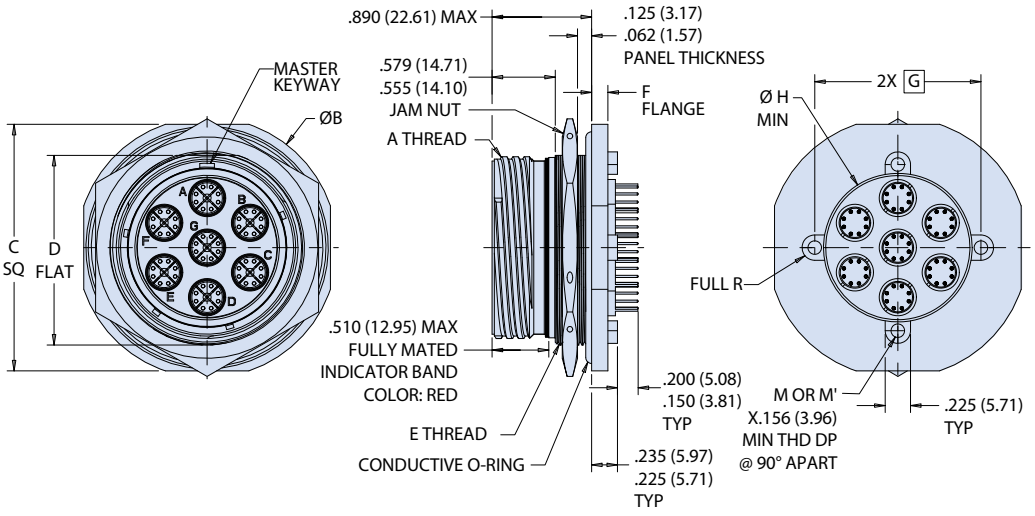

PANEL CUT-OUT

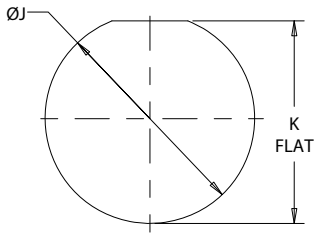

Dimensions		
Shell Size	ØJ ±0.010	K Flat
11	.830 (21.08)	.766 (19.46)
19	1.390 (35.31)	1.330 (33.78)
21	1.515 (38.48)	1.455 (36.96)
25	1.765 (44.83)	1.705 (43.31)

Dimensions										
Shell Size	A Thread -0.1P-0.3L-TS-2A	Ø B	C Sq	D Flat	E Thread ISO Metric	F	G	ØH Min	Threads M	Threads M'
11	.7500	1.386 (35.20) 1.362 (34.59)	1.268 (32.21) 1.263 (32.08)	0.755 (19.18) 0.745 (18.92)	M20 X 1.0-6g	0.122 (3.10) 0.083 (2.11)	0.719 (18.26)	0.468 (11.89)	.112-40 UNC-2B	M3 X .05
19	1.2500	1.949 (49.50) 1.925 (48.90)	1.827 (46.41) 1.795 (45.59)	1.316 (33.43) 1.306 (33.17)	M35 X 1.0-6g	0.153 (3.89) 0.114 (2.90)	1.150 (29.21)	0.934 (23.72)		
21	1.3750	2.075 (52.71) 2.051 (52.10)	1.953 (49.61) 1.921 (48.79)	1.441 (36.60) 1.431 (36.35)	M38 X 1.0-6g		1.221 (31.01)	1.055 (26.80)		
25	1.6250	2.323 (59.00) 2.299 (58.39)	2.205 (56.01) 2.173 (55.19)	1.691 (42.95) 1.681 (42.70)	M44 X 1.0-6g		1.475 (37.47)	1.307 (33.20)		

PCB FOOTPRINTS

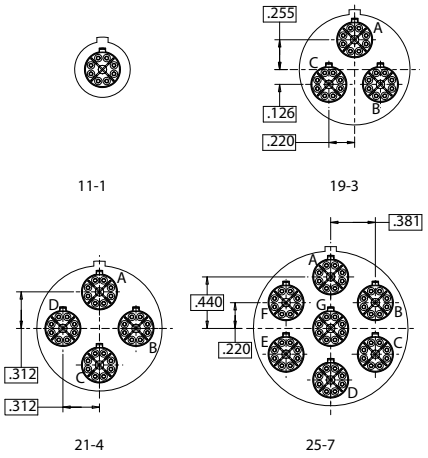

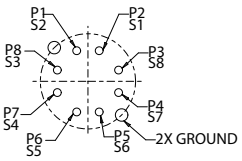

PINOUT
P = PIN PC TAIL PINOUT
S = SOCKET PC TAIL PINOUT
VIEW FROM FRONT OF CONNECTOR

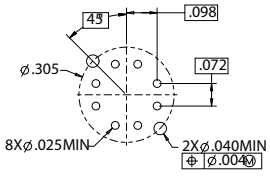

RECOMENDED PCB LAYOUT
VIEW FROM FRONT OF CONNECTOR

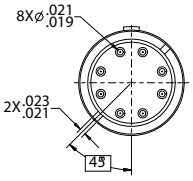

© 2022 Glenair, Inc • 1211 Air Way, Glendale, CA 91201 • 818-247-6000 • www.glenair.com • U.S. CAGE code 06324 • SuperNine® Catalog
Dimensions in Inches (millimeters) are subject to change without notice.

ADVANCED PEFORMANCE

SuperNine® High-Speed Series

MIL-DTL-38999 Series III Type Environmental Connectors

377-119 SpeedMaster™ multi-function backshell adapter

Part Number Development										
Sample Part Number	**377**	**N**	**S**	**119**	**MT**	**11**	**06**	**4**	**G**	**01**
Series	**377** = Series 37 Aluminum Alloy Backshells									
Connector Designator*	**N** = Glenair SpeedMaster™ Connector									
Angular Function	**S** = Straight **N** = 90° Solid Elbow **M** = 45° Solid Elbow									
Basic No.	**119**									
Material/Finish	See Finish Table									
Shell Size	**11**, **19**, **21**, **25**									
Optional Entry Size	See Optional Entry Size Table									
Length	In 1/2 Inch Increments; e.g. 4 = 2 inches (see note 2)									
Adapter Style	**G** = Gland Nut **K** = Tubing Adapter with Nut, Glenair PEEK **B** = Banding Adapter 601 Series Band Supplied with Backshell									
Cable Diameter	See Cable Diameter Table									

Dimensions											
Shell Size	**A Thread ISO Metric**	**B Max**	**D Max**	**E Max**	**F Max**	**G Max**	**H Ref**	**J Flats**	**Conduit Size Ref**	**Insert Identification**	**No. of Holes**
11	M15 X 1 - 6H	1.06 (26.92)	1.78 (45.21)	1.93 (49.02)	1.33 (33.78)	1.56 (39.62)	.54 (13.72)	.938 (23.83)	7/16	11-1	1
19	M28 X 1 - 6H	1.54 (39.12)	2.11 (53.59)	2.18 (55.37)	1.54 (39.12)	1.77 (44.96)	1.00 (25.40)	1.250 (31.75)	3/4	19-3	3
21	M31 X 1 - 6H	1.67 (42.42)	2.07 (52.58)	2.25 (57.15)	1.61 (40.89)	1.84 (46.74)	1.00 (25.40)	1.500 (38.10)	7/8	21-4	4
25	M37 X 1 - 6H	2.12 (53.85)	2.19 (55.63)	2.19 (55.63)	1.73 (43.94)	1.96 (49.78)	1.27 (32.26)	1.812 (46.02)	1	25-7	7

Optional Entry Size		
Entry Size	**C Ref Sym K**	**Opt. Conduit Size Ref.**
06	.330 (8.38)	7/16
07	.390 (9.91)	1/2
08	.515 (13.10)	5/8
10	.640 (16.26)	3/4
11	.640 (16.26)	3/4
13	.765 (19.43)	7/8
15	.890 (22.61)	1
17	1.125 (28.58)	1 1/4

Cable Diameter		
Entry Size	**P Approx**	**Cable Accomdation (Ref)**
01	.280 (7.11)	963-003-24, 963-037, 963-033-24
07	.220 (5.59)	963-003-26, 963-033-26

Finish Table		
Sym	**Finish Description**	
M	Aluminum alloy	Electroless nickel
MT		Nickel - PTFE
NF		Cad/O.D. over electroless nickel (100 hour salt spray)

© 2022 Glenair, Inc • 1211 Air Way, Glendale, CA 91201 • 818-247-6000 • www.glenair.com • U.S. CAGE code 06324 • SuperNine® Catalog
Dimensions in Inches (millimeters) are subject to change without notice.

SuperNine® High-Speed Series

MIL-DTL-38999 Series III Type Environmental Connectors

377-119 SpeedMaster™ multi-function backshell adapter

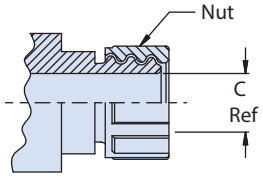

K - Peek Tubing Adapter with Nut

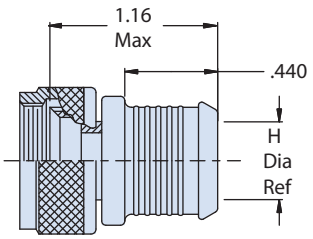

B - Banding Adapter

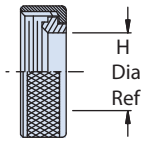

G - Gland Nut

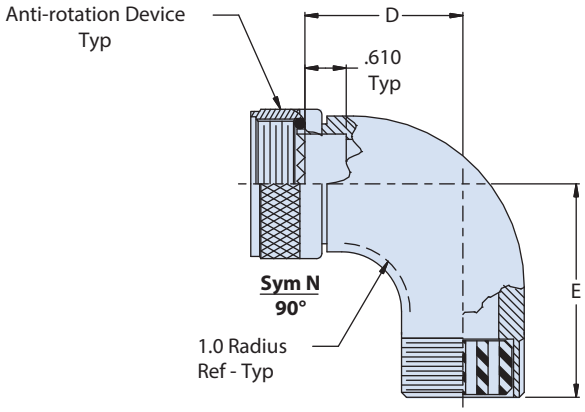

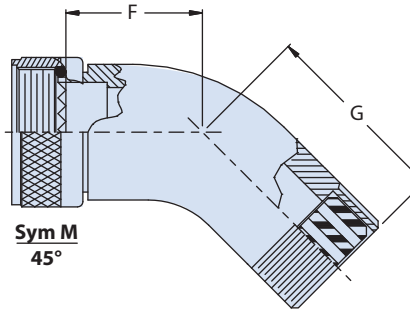

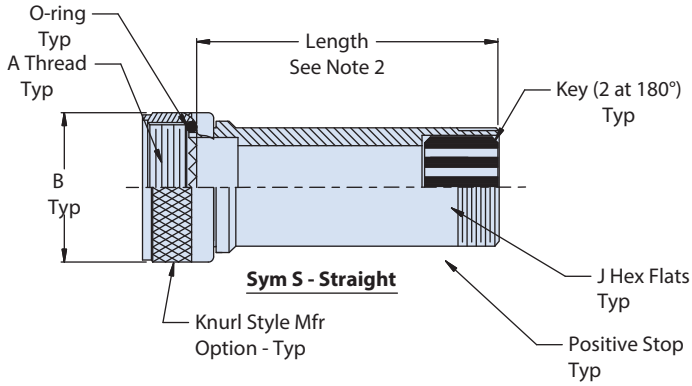

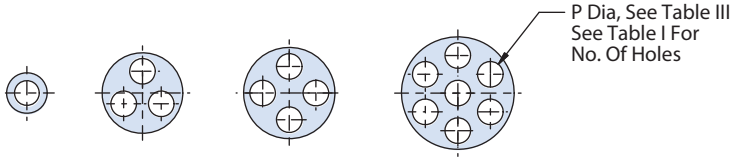

NOTES

1. Glenair 600 series backshell assembly tools are recommended for assembly and installation
2. Standard min. order length 1.5 inch, consult factory for shorter lengths
3. Material:
   - Adapters, elbows, ferrules, coupling nut, nut: aluminum alloy/see finish table
   - Grommet, O-ring: fluorosilicone/N.A.
   - Anti-rotation device: corrosion resistant material/N.A.

© 2022 Glenair, Inc • 1211 Air Way, Glendale, CA 91201 • 818-247-6000 • www.glenair.com • U.S. CAGE code 06324 • SuperNine® Catalog

Dimensions in Inches (millimeters) are subject to change without notice.

SuperNine® High-Speed Series

MIL-DTL-38999 Series III Type Environmental Connectors

AI85082 Speed Master™ Assembly Instructions

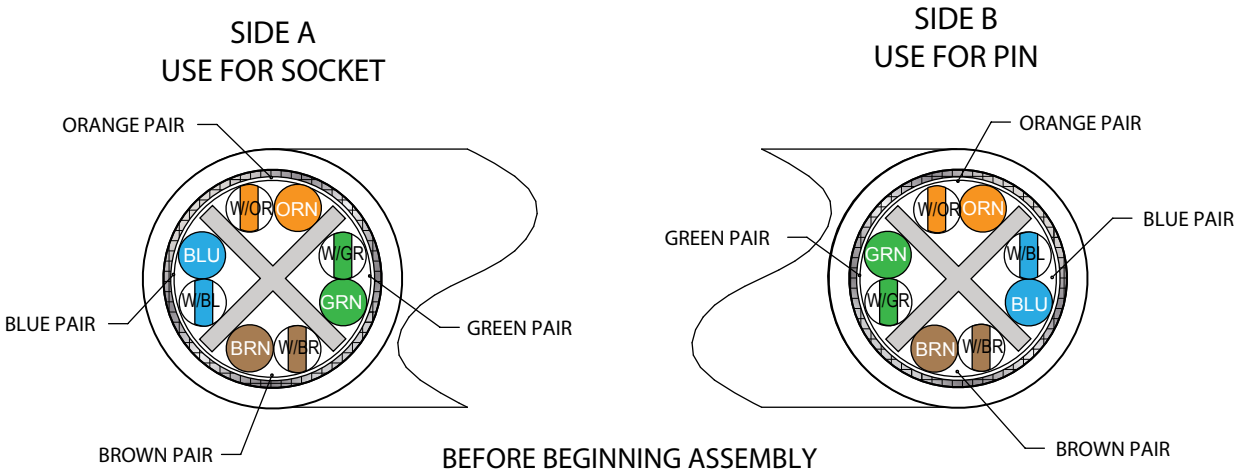

BEFORE BEGINNING ASSEMBLY

Verify the arrangement of wire colors in the cable to determine which side to use.

STEP 1

A. Place O-ring onto thread ferrule so that it is seated behind the thread. (Figure 1)
B. Slide retention ferrule with O-ring onto cable.

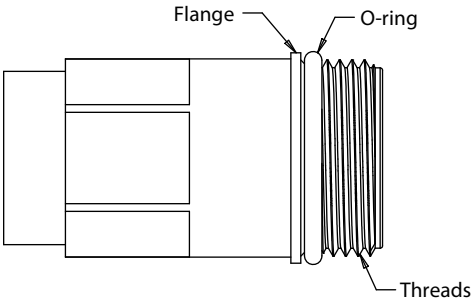

FIGURE 1

STEP 2

A. Slide shield ferrule onto cable.
B. Use proper tool to remove cable outer jacket to approximately .75 Inch.
C. Comb braid out straight, and trim it to approximately .3 Inches. Fold braid back afterward.
D. Trim outer tape, cable splice, and filler if any as close to the folded back braid shield as possible. (Figure 2)
E. Use appropriate tool to strip the individual wires to .130 Inches max.

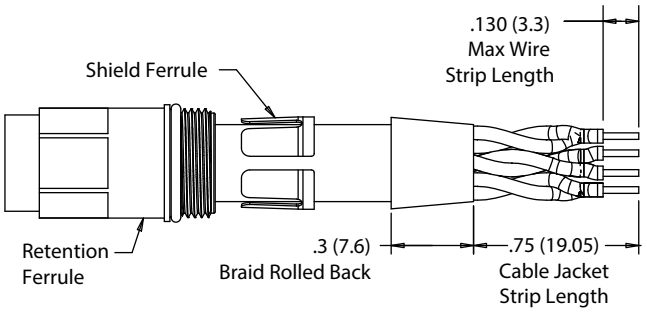

FIGURE 2

© 2022 Glenair, Inc • 1211 Air Way, Glendale, CA 91201 • 818-247-6000 • www.glenair.com • U.S. CAGE code 06324 • SuperNine® Catalog
Dimensions in Inches (millimeters) are subject to change without notice.

STEP 3

Maintain twist of pairs as best as possible. If needed – undo half a twist, do not over twist

A. Crimp contacts onto each individual wire using Daniels crimp tool M22520/2-01 (Glenair P/N 809-015) and Daniels positioner K41 (Glenair P/N 80--019) for sockets, and positioner K42 (Glenair P/N 809-018) for pins.
B. Insert each pair of wires into the appropriate quadrant on the isolator according to figure 3 for socket modules, and figure 4 for pin modules.

NOTES:
C. Crossing of pairs is not recommended. (cables should only be terminated as pin to socket).
D. Assembly instructions use socket module (858-100) for Illustrations. Pin module (858-101) is assembled in the same fashion.

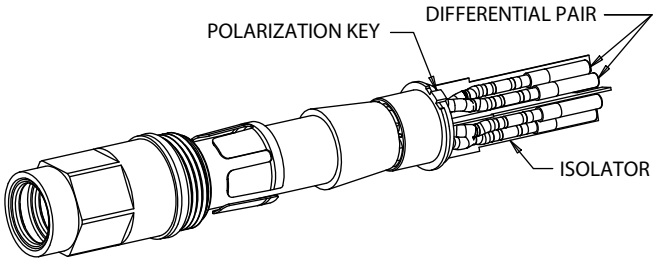

FIGURE 3
SOCKET MODULE PIN-OUT
FROM FRONT

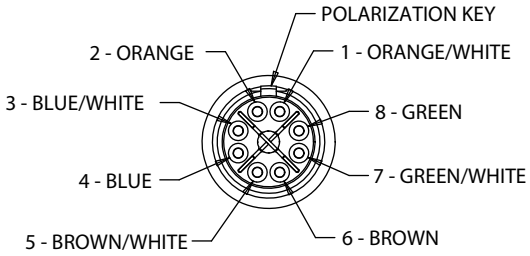

FIGURE 4
PIN MODULE PIN-OUT
FROM FRONT

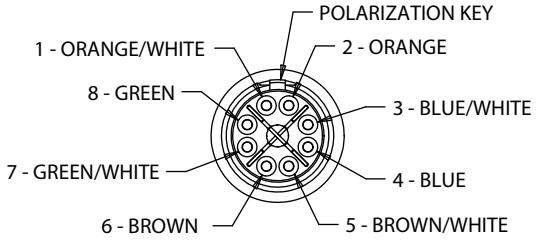

STEP 4

A. Push the cable all the way into the isolator so the wire pairs can be spread out easily
B. Move the wires/contacts out of the way and insert the inner insulator on the isolator. Slide the inner insulator all the way onto the isolator.
C. Snap each pair into the appropriate position on the inner insulator. Refer to figure 2 for sockets and figure 3 for pins.

Notes:
Be sure to maintain twist of each pair as close to the insulator as possible to improve signal. Do not over twist

FIGURE 5

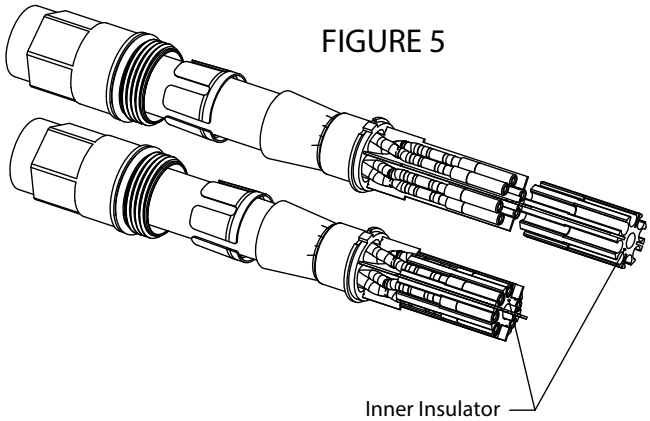

STEP 5

A. Slide outer insulator onto module assembly. Be sure to align the slots/fins and polarization keys. (Figure 6 and 7)
B. Fold braid shield forward onto termination zone. (Figure 7)
C. Slide thread ferrule over shield ferrule and move both to the main shoulder. (Figure 8)
D. Trim excessive braid to behind main shoulder. (Figure 8)

FIGURE 6

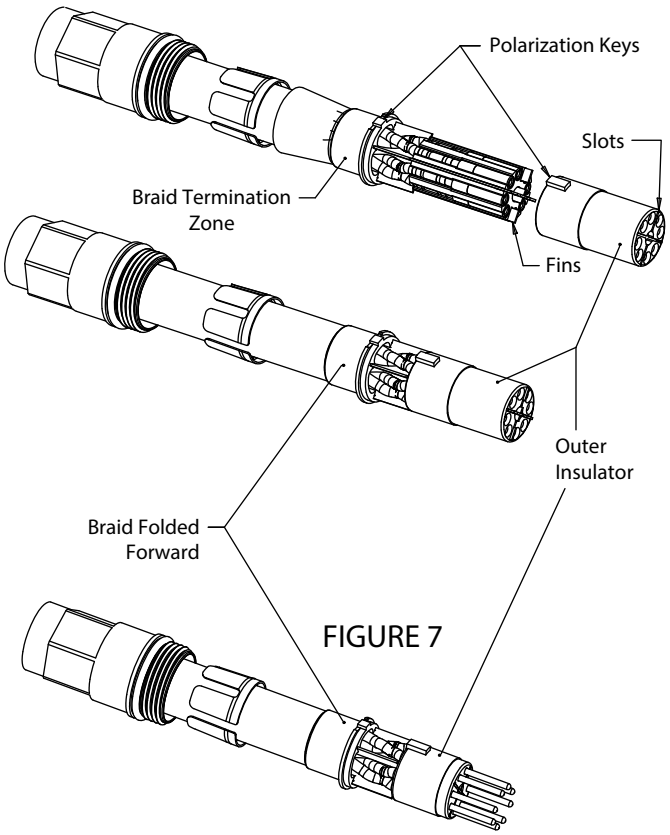

FIGURE 7

Pin Module (858-101) Shown For Reference

FIGURE 8

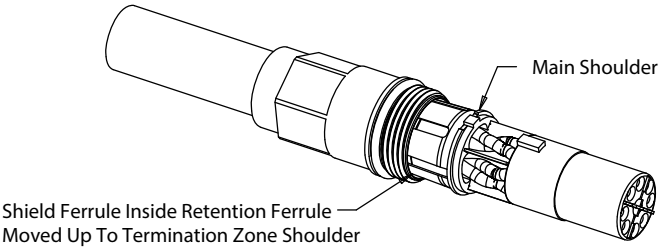

© 2022 Glenair, Inc • 1211 Air Way, Glendale, CA 91201 • 818-247-6000 • www.glenair.com • U.S. CAGE code 06324 • SuperNine® Catalog
Dimensions in Inches (millimeters) are subject to change without notice.

INSTALLATION

A. Slide completed module into the insert cavity, making sure to align the module polarization keys with the cavity keyway. (Figure 1)
B. Using the retention ferrule tool (Glenair P/N 607-011), and a 3/8": wrench, tighten the retention ferrule to a torque of 5 in-lb. (Figure 2)
C. Install remaining modules in the same manner (figure 3)

Notes:
Figures 1-3 show installation into a 4 cavity female rear panel mount. For other shell types and arrangements contact factory.

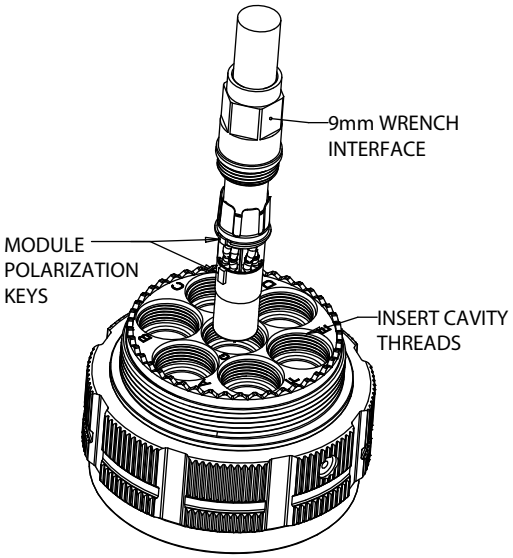

FIGURE 1

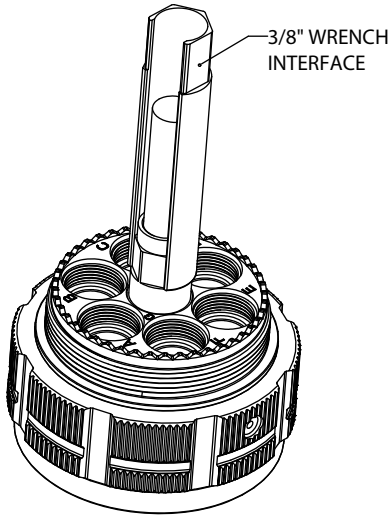

FIGURE 2

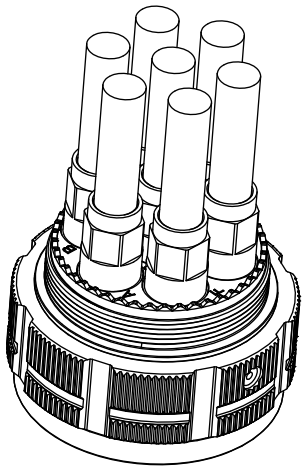

FIGURE 3

© 2022 Glenair, Inc • 1211 Air Way, Glendale, CA 91201 • 818-247-6000 • www.glenair.com • U.S. CAGE code 06324 • SuperNine® Catalog
Dimensions in Inches (millimeters) are subject to change without notice.

Glenair®

MISSION-DRIVEN DESIGN

SERIES 23 SUPERNINE®

Hermetic Series MIL-DTL-38999 Series III

Glass-to-metal sealed hermetic connectors in both pin and socket configurations. Available sealing (helium leak rate) from $<1X10^{-7}$ to $1X10^{-10}$ cc/sec

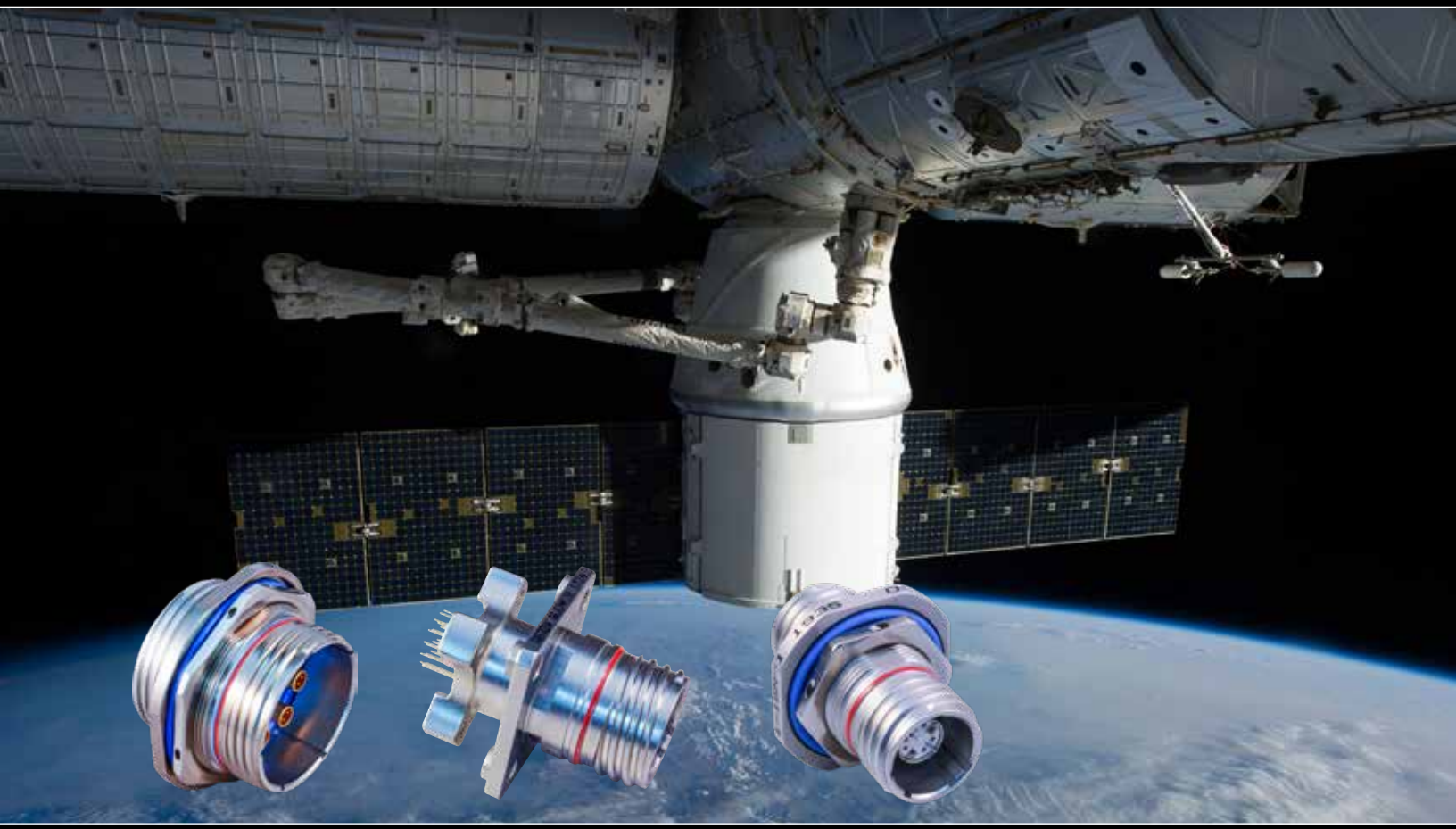

Features

- DSCC qualified MIL-DTL-38999 Series III glass-sealed hermetics in both pin and socket configurations
- No material breakdown or aging over time
- Matched and compression seal glass-to-metal technologies
- Pressure resistance to 32,000+ PSI
- Available CODE RED lightweight aluminum hermetics with low-resistance copper contacts

SuperNine®

ADVANCED PERFORMANCE

SuperNine® Hermetic Connectors

MIL-DTL-38999 Series III Type

Product selection guide

SuperNine Hermetic Connector Overview D-3
Materials and Specifications Summary D-5
Screening and Outgassing D-6
Special Shielded Contact Arrangements (233-261 and 233-262 Only) D-7
Performance Specifications D-11



233-265 Hermetic Receptacle D-15
Jam-Nut Mount
Box Mount
Glass sealed solution with removable socket contacts accessory threads



233-266 Solder Cup, Receptacle D-17
Jam-Nut Mount
Glass sealed solution with accessory thread or banding porch

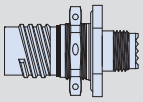

233-277 Solder Cup, Receptacle D-19
Jam-Nut Mount
Piston Sealing, 1000 PSI Rated, Solder Cup, Banding Porch or Accessory Thread

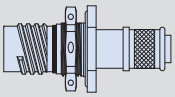

233-278 Solder Cup, Receptacle D-21
Jam-Nut Mount
Piston Sealing, 1000 PSI Rated, Removable Crimp Contacts, Banding Porch or Accessory Thread Version



233-263 Receptacle with 10G High-Speed Contacts D-23
Square Flange Mount
Jam-Nut Mount, Single or Dual O-ring
Weld Mount

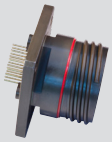

233-262 PC Tail, Receptacle D-27
Box Mount
Jam-Nut Mount, Single or Dual O-ring
Weld Mount
Shielded contacts, short threaded standoff



233-267 PC Tail, Receptacle D-31
Box Mount
Jam-Nut Mount, Single and Dual O-ring
Glass sealed solution with pin or socket feed-thru contacts and threaded standoff

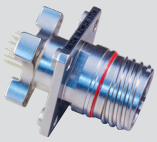

233-268 Dual Flange, PC Tail D-35
Box Mount
Jam-Nut Mount, Single and Dual O-ring
Glass sealed solution with pin or socket feed-thru contacts and threaded standoff

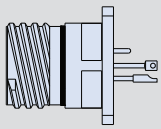

233-271 Hermetic Receptacle D-39
Flange Mount, Jam-Nut Mount, Solder Mount, and Weld Mount Receptacles with Thermocouple Contacts

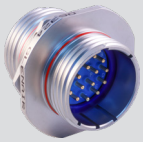

233-103 Bulkhead Feed-thru D-44
Box Mount
Jam-Nut Mount, Single and Dual O-ring
Weld Mount
Pin, socket, pin-pin or socket-socket

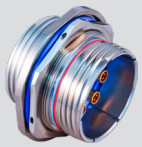

233-261 Bulkhead Feed-thru D-48
Box Mount
Jam-Nut Mount, Single and Dual O-ring
Weld Mount
Special shielded contacts

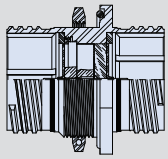

233-284 Hermetic Bulkhead Feed-thru D-52
Jam-Nut Mount Connector with Thermocouple



233-103 Sav-Con® Feed-thru D-57
Jam-Nut Mount, Bulkhead Feed-thru Gender Changer

© 2022 Glenair, Inc • 1211 Air Way, Glendale, CA 91201 • 818-247-6000 • www.glenair.com • U.S. CAGE code 06324 • SuperNine® Catalog

Dimensions in Inches (millimeters) are subject to change without notice.

ADVANCED PERFORMANCE

SuperNine® Hermetic Connectors

MIL-DTL-38999 Series III Type

Product selection guide

CODE RED

SuperNine® Lightweight Hermetic Connectors with CODE RED™ Encapsulant, Overview D-61

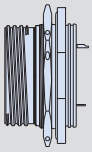

233-250 Lightweight Hermetic Receptacle D-63
Jam-Nut Mount
PC tail or solder cup contacts

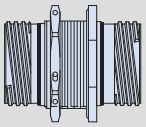

233-251 Lightweight Hermetic Bulkhead Feed-thru D-64
Jam-Nut Mount

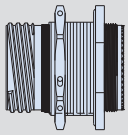

233-252 Lightweight Hermetic Receptacle D-66
Jam-Nut Mount
Crimp removable contacts

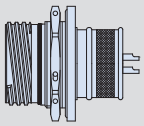

233-253 Lightweight Hermetic Receptacle D-68
Jam-Nut Mount
Solder cup contacts with banding porch and boot groove



233-254 Lightweight Hermetic Receptacle D-70
Jam-Nut Mount
High-speed quadrax PC tail contacts with standard or metric threaded standoff

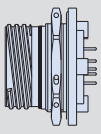

233-255 Lightweight Hermetic Receptacle D-72
Jam-Nut Mount
PC tail contacts with threaded standoff

© 2022 Glenair, Inc • 1211 Air Way, Glendale, CA 91201 • 818-247-6000 • www.glenair.com • U.S. CAGE code 06324 • SuperNine® Catalog
Dimensions in Inches (millimeters) are subject to change without notice.



SuperNine®

Hermetic Connectors

GLASS-SEALED Hermetic CONNECTORS

38999 Series III type hermetic connectors with MIL-STD-1560 insert arrangements

SuperNine hermetic-class MIL-DTL-38999 type Series III connectors go beyond the standard mil-spec offerings with additional features and options. These include dual O-ring jam-nut designs, dual-flange PC tail receptacles, bulkhead feed-thrus, high-speed shielded RF contacts and removable socket contacts. Hermetically sealed connectors are ideally suited for harsh vacuum environments which must remain free of air or gas impurities or the ingress of foreign chemical substances to prevent corrosive condensation, dielectric breakdown, or the loss of insulation resistance between conductors. Typical applications include medical, geophysical, military aerospace, and industrial applications.

Glenair is unique in the interconnect industry in offering both conventional glass-sealed hermetic connector solutions as well as lightweight and low contact resistance designs. Shell styles for both types include box mount, jam-nut mount, and weld mount. MIL-DTL-38999 equivalent finishes for Y (CRES, passivated) and N (CRES, electrodeposited nickel) are available, as well as additional finish options. Contact arrangements available per MIL-STD-1560. All standard and alternate polarizations are fully supported.

Features:

- **10^{-7} ccHe per sec at 1 atmosphere differential**
- **Highest performance and quality**
- **Available for every standard 1560 insert arrangement**
- **High-reliability performance**
- **Gender changers**
- **Sheided RF Feed-thrus**
- **Independent keyed polarization**
- **Box mount, weld mount and jam-nut mount bulkhead feedthroughs**

ADVANCED PERFORMANCE

SuperNine® Hermetic connectors

MIL-DTL-38999 Series III Type

Innovative hermetic solutions

STANDARD SHELL STYLE CONFIGURATIONS

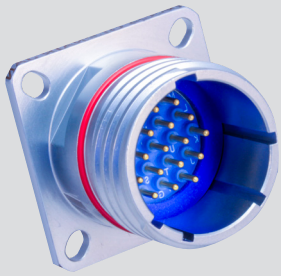

Box Mount

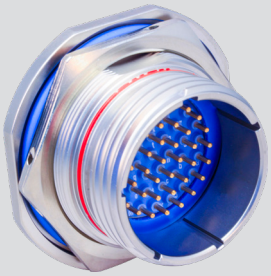

Jam-Nut Mount

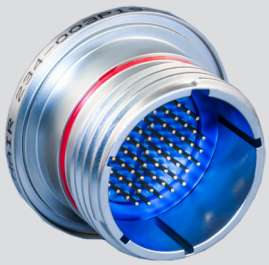

Weld Mount



Sav-Con Feed-thrus and Gender Changers

UNIQUE SUPERNINE® SOLUTIONS

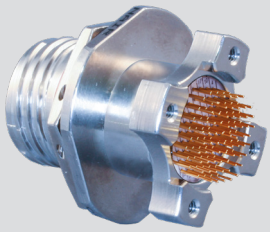

Dual Flange PC Tail



Banding Porch or Accessory Thread

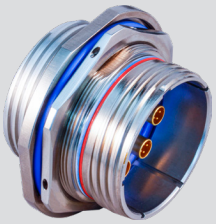

Shielded RF Contact Feed-thrus

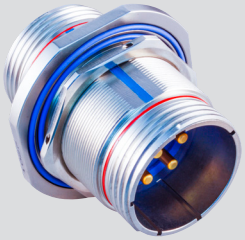

Dual O-ring Jam-Nut



Lightweight Hermetic Receptacle

ADDITIONAL CAPABILITIES



Crimp Removable Contacts



Custom Applications



Bulkhead Penetrators



Combo Insert Arrangements

Glenair SuperNine hermetic connectors are designed to meet or exceed military specification performance requirements. Glenair also manufactures and supplies hermetic connectors for most every military standard connector currently in use including:

- **MIL-DTL-26482 Series I and II**
- **MIL-DTL-28840**
- **MIL-DTL-38999 Series I, II, III and IV**
- **MIL-DTL-5015**
- **MIL-DTL-83723 LN 29729 (SJT)**
- **Series 801 and 805 Mighty Mouse**
- **M24308 D-Subminiature**
- **Series 79 Micro-Crimp®**
- **MIL-DTL-83513 Micro-D Subminiature**
- **Series 28 HiPer-D® M24308 intermateable**

Comprehensive materials, plating, and polarization options available

© 2022 Glenair, Inc • 1211 Air Way, Glendale, CA 91201 • 818-247-6000 • www.glenair.com • U.S. CAGE code 06324 • SuperNine® Catalog
Dimensions in Inches (millimeters) are subject to change without notice.

SuperNine® Glass seal hermetic

MIL-DTL-38999 Series III Type

Materials and specifications summary

SUMMARY OF MATERIALS AND SPECIFICATIONS FOR GLASS-TO-METAL HERMETICS

GLASS-SEALED Hermetic CONNECTORS

Standard Materials and Finishes

- Shell, barrel coupling jam nut, coupling nut – CRES/passivate or CRES/nickel plate
- Contact, pin - nickel-iron alloy/gold plate
- Contact, Socket - copper alloy/gold plate
- Insulator, pin - vitreous glass
- Insulator, socket - high-grade rigid dielectric
- Ground spring - copper alloy/gold plate
- O-rings and seals - fluorosilicone blend

Test Requirements

- DWV - per DWV Voltage Level table
- I.R. - 5 gigohms min @ 500 VDC
- Hermeticiy - <1 x 10^{-7} ccHe/sec @ 1 ATM Differential

Shell Type and Sizes

- Shell Type – D38999 Series III Type, sizes 9 through 25

Hermetic Class Materials	
Shell, Barrel, Coupling and Jam Nut (Hermetic)	Stainless steel per AMS-QQ-S-763
Front and Rear Insulators	Glass-filled liquid crystal polymer (LCP) in accordance with MIL-M-24519, Type GLP-30F
Grommet, Peripheral Seal and Interfacial Seal	Blended elastomer, 30% silicone per ZZ-R-765, 70% fluorosilicone per MIL-R-25988
Hermetic Insert	Vitreous glass
Pin Contact (Hermetic)	Nickel-iron alloy per ASTM F30 (Alloy 52),50 microinches gold plated per ASTM B488 Type II Code C Class 1,27 over nickel plate per QQ-N-290 Class 2, 50-100 microinches
Socket Contact (Hermetic)	Copper Alloy, Gold Plated IAW ASTM B488, Type II, Code C
Adhesives	Silicone and epoxy

Additional Hermetic Finishes				
Glenair	**Mil-Spec**	**Material**	**Finish**	**Specification**
Z1	**Y**	Stainless Steel	Passivate	AMS-QQ-P-35
ZL	**N**	Stainless Steel	Electrodeposited Nickel	SAE-AMS-QQ-N-290, Class 2
ZMT*	**N/A**	Stainless Steel	Nickel-PTFE	SAE AMS2454
ZW*	**N/A**	Stainless Steel	Cadmium, Olive Drab	SAE-AMS-QQ-P-416 Type II Class 2 over electroless nickel
TD*	**N/A**	Titanium	Titanium	ASTM B348/AMS4928

*Contact factory for specific performance restrictions

DWV Voltage Levels	
Service Rating	Voltage AC RMD 60 Hz
M	1300 VAC
I	1800 VAC
II	2300 VAC
N	1000VAC

Hermetic Leak Rate and Shell Material Mod Codes	
Designator	Required Leak Rate
-585A	1 x 10^{-10} cc's Helium per second
-585B	1 x 10^{-9} cc's Helium per second
-585C	1 x 10^{-8} cc's Helium per second
-185C	Changes receptacle shell/plug barrel to "Inconel 625" material (UNS N06625) per ASTM B446/ SAE-AMS-5666
-185D	Changes receptacle shell/plug barrel to "Inconel X750" material (UNS N07725) per ASTM B637/ SAE-AMS-5670

© 2022 Glenair, Inc • 1211 Air Way, Glendale, CA 91201 • 818-247-6000 • www.glenair.com • U.S. CAGE code 06324 • SuperNine® Catalog
Dimensions in Inches (millimeters) are subject to change without notice.

SuperNine® Hermetic connectors

MIL-DTL-38999 Series III Type

Class H and NASA space-grade application guides

NASA and Class H Screening and Outgassing Requirements

NASA requires that connectors for space flight be specially screened. NASA EEE-INST-002 standards for EEE parts are divided into 3 levels of screening for space-grade components; refer to Table II for details. For space applications, begin by selecting the desired NASA screening level and outgassing modification code from Table I. MIL-DTL-38999 specification defines TML and CVCM values for Class H space flight rated hermetic connectors. Glenair modification code 186T provides Class H outgassing equivalency for SuperNine commercial hermetic part numbers without screening.

To add a modification code append code to end of part number, for example: *233-265-H2Z117-26PN02-**429C***. Additional screening may be added and will appear as separate line item on customers order.

- **"Mission critical" connectors for space flight should undergo rigorous 100% final inspection**
- **Modification codes are available to invoke special screening for both MIL-DTL-38999 and NASA applications**
- **Outgassing properties of materials used in Glenair Series 23 SuperNine® glass-seal hermetic connectors are detailed in the table below**

Table I: Screening Level and Available Outgassing Modification Codes

Screening Level	Screening Only	48 Hour Oven Bakeout +175° C	Thermal Vacuum Outgassing[2]	
			24 Hour +125° C	48 Hour +175° C
NASA, Level 1 Highest Reliability	429B	429J	429C	
NASA, Level 2 High Reliability	429	429K	429A	
NASA, Level 3 Standard Reliability	Use Standard Part Number		429L	
D38999 Class H[1] No Screening				186T

1. Class H is **only** applicable to QPL part numbers. Mod code 186T provides equivalent outgassing processing of non-qualified parts. Additional screening available as a separate line item on the customer's purchase order. 2. Thermal vacuum of 10^-6 Torr.

Table II: NASA EEE-INST-02, Screening Levels

Inspection	Level 1	Level 2	Level 3
Visual	100%	100%	100%
Mechanical	2(0)	2(0)	
Dielectric Withstanding Voltage	2(0)	2(0)	
Insulation Resistance	2(0)	2(0)	
Contact Engagement & Separation Force	2(0)		
Hermeticity (Sealed Receptacles Only)	100%	100%	
Coupling Force	2(0)		

Required inspection quantity shown. Number in parenthesis indicates acceptance of failures allowed for all quantities inspected.

Outgassing Properties of Materials Used in MIL-DTL-38999 Type SuperNine Hermetic Connectors

Component	Material	TML %	CVCM %	Test Reference
Front and Rear Insulator	Front: high-grade rigid dielectric Rear: Epiall®	0.84	0.0	NASA Test # GSC15435 (48 hours at 180°C)
Grommet, Peripheral Seal and Interfacial Seal	Blended fluorosilicone/silicone elastomer	0.04	0.0	Glenair test
Insulator-to-Rubber Bonding Material	RTV, per MIL-A-46146	<1.0	<0.1	Glenair Test
White Epoxy Ink for Silk-screening	Markem 7224 White	0.49	0.03	NASA Test #GSC19899

MIL-DTL-38999 Type SuperNine Hermetic Connector Materials Approved for Space Flight

Component	Material	Notes
Shells, Coupling Nuts, Jam Nuts	Stainless Steel	Approved for Space Flight
Rigid Insulators	Glass reinforced thermoset plastic, Epiall 1908	Approved for Space Flight
Contact Retention Clip	Beryllium copper, heat-treated, unplated	Approved for Space Flight
Grommet, Peripheral Seal, Interfacial Seal, O-ring	Blended fluorosilicone/silicone elastomer	Requires outgassing processing
Pin/Socket Contact	Gold plated beryllium copper alloy	Approved for Space Flight
Socket Contact Hood	Stainless steel	Approved for Space Flight
Potting Compounds and Adhesives	RTV and epoxies	Requires outgassing processing
Hermetic Insert	Vitreous Glass	Approved for Space Flight

© 2022 Glenair, Inc • 1211 Air Way, Glendale, CA 91201 • 818-247-6000 • www.glenair.com • U.S. CAGE code 06324 • SuperNine® Catalog
Dimensions in Inches (millimeters) are subject to change without notice.

SuperNine® Hermetic connectors

MIL-DTL-38999 Series III Type

Special shielded contact arrangement table

Arrangement No. (See Notes)	Size 22	Cont Type	Size 20	Cont Type	Size 16	Cont Type	Size 12	Cont Type	Size 8	Cont Type
11-2	---	---	---	---	2	Coax	---	---	---	---
13-4	---	---	---	---	4	Coax	---	---	---	---
15-15	---	---	14	S/P	1	Coax	---	---	---	---
15-21	17	S/P	3	S/P	---	---	1	Coax	---	---
15-97	---	---	8	S/P	4	Coax	---	---	---	---
17-2*	38	S/P	---	---	---	---	---	---	---	Twinax
17-3*	38	S/P	---	---	---	---	---	---	1	Twinax
17-6	---	---	---	---	---	---	6	Coax	---	---
17-8	---	---	---	---	8	Coax	---	---	---	---
17-11	---	---	8	S/P	---	---	3	Coax	---	---
17-99	---	---	21	S/P	2	Coax	---	N/A	---	---
19-11	---	---	---	---	11	Coax	---	---	---	---
19-19	14	S/P	---	---	---	---	---	---	4	Twinax
19-28	---	---	26	S/P	2	Coax	---	---	---	---
19-30	---	---	29	S/P	1	Coax	---	---	---	---
21-11	---	---	---	---	---	---	11	Coax	---	---
21-16	---	---	---	---	16	Coax	---	---	---	---
21-29	---	---	19	S/P	4	S/P	4	Coax	---	---
21-39	---	---	37	S/P	2	Coax	---	---	---	---
21-75**	---	---	---	---	---	---	---	---	4	Twinax
21-76**	---	---	---	---	---	---	---	---	4	Twinax
23-21	---	---	---	---	21	Coax	---	---	---	---
23-97	---	---	---	---	---	---	---	---	---	---
23-99	---	---	---	---	---	---	---	---	---	---
25-4	---	---	48	S/P	8	Coax	---	---	---	---
25-7\\	97	S/P	---	---	---	---	---	---	2	Twinax
25-8+	---	---	---	---	---	---	---	---	8	Twinax
25-9\\	97	S/P	---	---	---	---	---	---	2	Twinax
25-10+	---	---	---	---	---	---	---	---	8	Twinax
25-19	---	---	---	---	---	---	19	Coax	---	---
25-20^	---	---	10	S/P	13	S/P	4	Coax	3	Twinax
25-21^	---	---	10	S/P	13	S/P	4	Coax	3	Twinax
25-24	---	---	12	S/P	12	Coax	---	---	---	---
25-29	---	---	---	---	29	Coax	---	---	---	---
25-37	---	---	---	---	37	Coax	---	---	---	---
25-43	---	---	23	S/P	20	Coax	---	---	---	---
25-46@	---	---	40	S/P	4	S/P	---	---	2	Coax
25-47@	---	---	40	S/P	4	S/P	---	---	2	Coax
25-90#	---	---	40	S/P	4	S/P	---	---	2	Twinax
25-91#	---	---	40	S/P	4	S/P	---	---	2	Twinax

Notes

1. S/P = signal/power contacts (non-RF type).
2. Arrangements are per MIL-STD-1560, and contact types are per the standard, or specified option. #16 contacts are only available as coax. Consult factory for other contact options.
3. Arrangements marked with like symbols (I.E. 17-2* and 17-3*) are identical. Contact sealing boots are different for environmental connectors

© 2022 Glenair, Inc • 1211 Air Way, Glendale, CA 91201 • 818-247-6000 • www.glenair.com • U.S. CAGE code 06324 • SuperNine® Catalog
Dimensions in Inches (millimeters) are subject to change without notice.

SuperNine® Hermetic connectors

MIL-DTL-38999 Series III Type

Special shielded contact arrangements

Contact Legend
#22D ● #16 ⊕
#20 ⊖ #12 ◒
#8 ◉



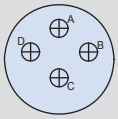

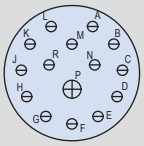

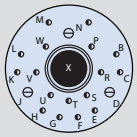

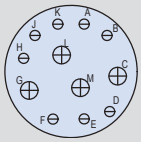

Insert Arrangement	11-2	13-4	15-15		15-21			15-97	
Contact Size	#16	#16	#16	#20	#12	#20	#22D	#16	#20
No. of Contacts	2	4	1	14	1	3	17	4	8
Service Rating	Coax	Coax	Coax	I	Coax	I		Coax	I

Contact Legend
#22D ● #16 ⊕
#20 ⊖ #12 ◒
#8 ◉

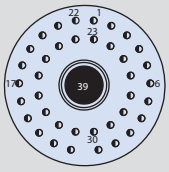

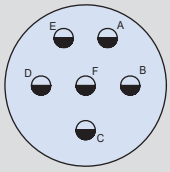

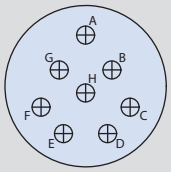

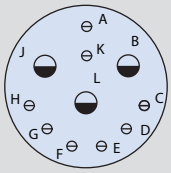

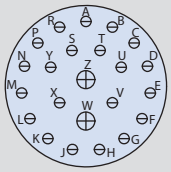

Insert Arrangement	17-2 and 17-3		17-6	17-8	17-11		17-99	
Contact Size	#22D	#8	#12	#16	#12	#20	#16	#20
No. of Contacts	38	1	6	8	3	8	2	21
Service Rating	M	Twinax	Coax	Coax	Coax	N	Coax	I

Contact Legend
#22D ● #16 ⊕
#20 ⊖ #12 ◒
#8 ◉

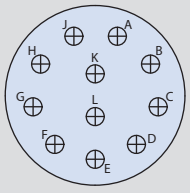

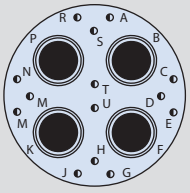

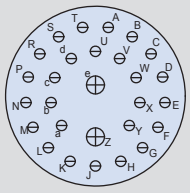

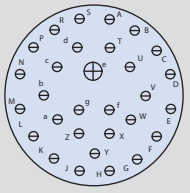

Insert Arrangement	19-11	19-19		19-28		19-30	
Contact Size	#16	#8	#22D	#16	#20	#16	#20
No. of Contacts	11	4	14	2	26	1	29
Service Rating	Coax	Twinax	M	Coax	I	Coax	I

Contact Legend
#22D ● #16 ⊕
#20 ⊖ #12 ◒
#8 ◉

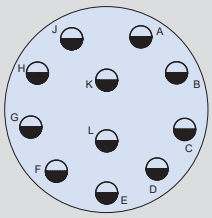

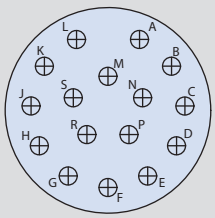

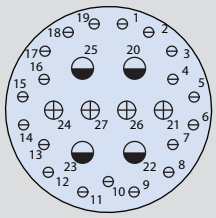

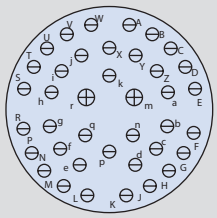

Insert Arrangement	21-11	21-16	21-29			21-39	
Contact Size	#12	#16	#12	#16	#20	#16	#20
No. of Contacts	11	16	4	4	19	2	37
Service Rating	Coax	Coax	Coax	I		Coax	I

© 2022 Glenair, Inc • 1211 Air Way, Glendale, CA 91201 • 818-247-6000 • www.glenair.com • U.S. CAGE code 06324 • SuperNine® Catalog
Dimensions in Inches (millimeters) are subject to change without notice.

SuperNine® Hermetic connectors

MIL-DTL-38999 Series III Type

MIL-STD-1560 Special shielded contact arrangements

Contact Legend
#22D ⊙ #16 ⊕
#20 ⊖ #12 ◒
#8 ●

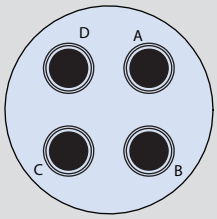

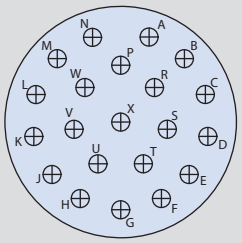

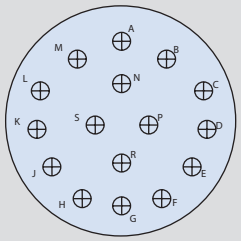

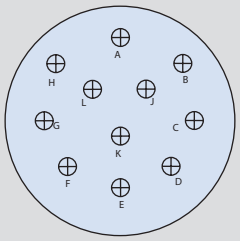

Insert Arrangement	21-75 and 21-76	23-21	23-97	23-99
Contact Size	#8	#16	#16	#16
No. of Contacts	4	21	16	11
Service Rating	Twinax	Coax	Coax	Coax

Contact Legend
#22D ⊙ #16 ⊕
#20 ⊖ #12 ◒
#8 ●

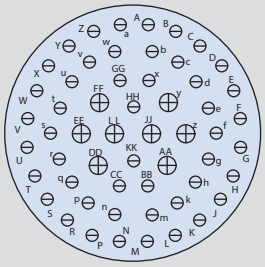

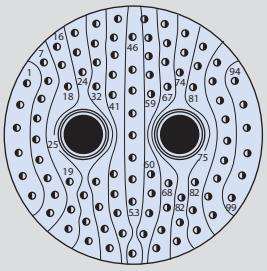

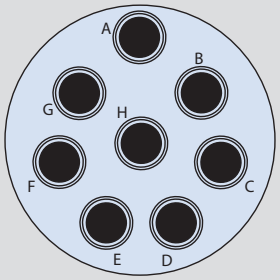

Insert Arrangement	25-4		25-7 and 25-9		25-8 and 25-10
Contact Size	#16	#20	#8	#22D	#8
No. of Contacts	8	48	2	97	8
Service Rating	Coax	I	Twinax	M	Twinax

Contact Legend
#22D ⊙ #16 ⊕
#20 ⊖ #12 ◒
#8 ●

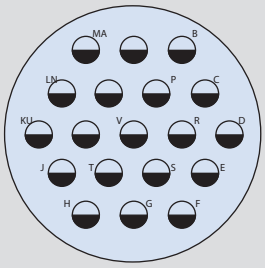

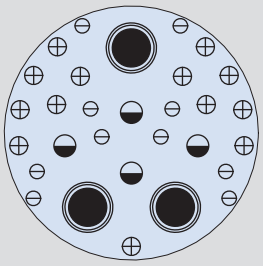

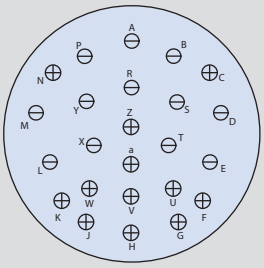

Insert Arrangement	25-19	25-20 and 25-21				25-24	
Contact Size	#12	#8	#12	#16	#20	#12	#16
No. of Contacts	19	3	4	13	10	12	12
Service Rating	Coax	Twinax	Coax	N		I	Coax

© 2022 Glenair, Inc • 1211 Air Way, Glendale, CA 91201 • 818-247-6000 • www.glenair.com • U.S. CAGE code 06324 • SuperNine® Catalog
Dimensions in Inches (millimeters) are subject to change without notice.

SuperNine® Hermetic connectors

MIL-DTL-38999 Series III Type

MIL-STD-1560 Special shielded contact arrangements

Contact Legend

#22D #16
#20 #12
#8

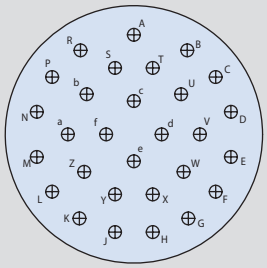

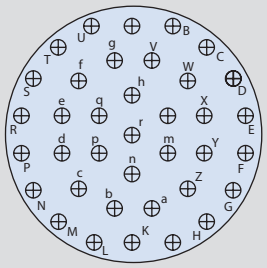

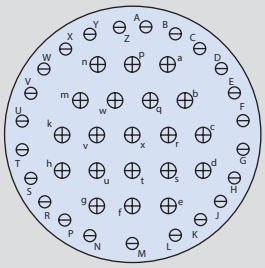

Insert Arrangement	25-29	25-37	25-43	
Contact Size	#16	#16	#16	#20
No. of Contacts	29	37	20	23
Service Rating	Coax	Coax	Coax	I

Contact Legend

#22D #16
#20 #12
#8

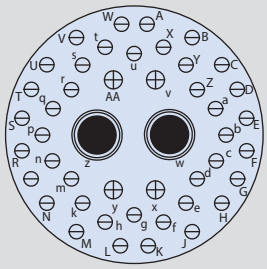

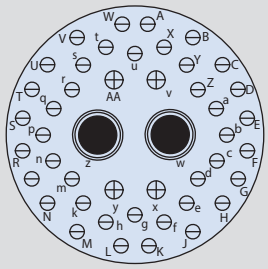

Insert Arrangement	25-46 and 25-47			25-90 and 25-91		
Contact Size	#8	#16	#20	#8	#16	#20
No. of Contacts	2	4	40	2	4	40
Service Rating	Coax	I		Twinax	I	

© 2022 Glenair, Inc • 1211 Air Way, Glendale, CA 91201 • 818-247-6000 • www.glenair.com • U.S. CAGE code 06324 • SuperNine® Catalog
Dimensions in Inches (millimeters) are subject to change without notice.

SuperNine® Glass seal hermetic

MIL-DTL-38999 Series III Type

Performance specifications

Performance Specifications, IAW MIL-DTL-38999 Series III REV. M, Glenair SuperNine	
Test	**Test Requirements**
Fungus	Materials used in the construction of these connectors shall be fungus inert per certification of method 508.4 of MIL-STD-810
Contact Plating Thickness	Plating thickness of contacts used in hermetic connectors shall be in accordance with MIL-DTL-45204
Supported Wire Size	<table><tr><td>**Contact Size**</td><td>23-22</td><td>22D</td><td>20</td><td>16</td><td>12</td><td>10</td></tr><tr><td>**Wire Gauge**</td><td>26, 24, 22</td><td>28, 26, 24, 22</td><td>24, 22, 20</td><td>20, 18, 16</td><td>14, 12</td><td>10</td></tr></table>
Thermal Shock	Unmated receptacles shall be subjected to 10 cycles of thermal shock
Air Leakage	When tested as specified, there shall be no evidence of leakage in excess of .01 micron ft^3/h (1E-7 cm^3/s).
Coupling and Uncoupling Torque	The coupling torque for mating and unmating of the counterpart connectors and protective covers shall meet the requirements of the table shown below. **Coupling and Uncoupling Torque** <table><tr><td rowspan="2">Shell Size</td><td>Maximum Engagement and Disengagement</td><td>Minimum Disengagement</td></tr><tr><td>Pound inch</td><td>Pound inch</td></tr><tr><td>9</td><td>8</td><td>2</td></tr><tr><td>11</td><td>12</td><td>2</td></tr><tr><td>13</td><td>16</td><td>2</td></tr><tr><td>15</td><td>20</td><td>3</td></tr><tr><td>17</td><td>24</td><td>3</td></tr><tr><td>19</td><td>28</td><td>3</td></tr><tr><td>21</td><td>32</td><td>5</td></tr><tr><td>23</td><td>36</td><td>5</td></tr><tr><td>25</td><td>40</td><td>5</td></tr></table>
Durability	No electrical or mechanical defects after 500 cycles of engagement and disengagement
Insulation Resistance	**At Ambient Temperature** insulation resistance between any pair of contacts and between any contact and the shell shall be greater than 5,000 megohms. Insulation resistance after altitude immersion shall be 1,000 megohms minimum. Insulation resistance after humidity shall be 100 megohms minimum. IAW EIA-364-21. **At Elevated Temperature** Unmated connectors shall be greater than 200 megohms when tested in accordance with test procedure EIA/ECA-364-21

SuperNine® Glass seal hermetic

MIL-DTL-38999 Series III Type

Performance specifications

<table>
<tr><th colspan="2">Performance Specifications, IAW MIL-DTL-38999 Series III REV. M, Glenair SuperNine</th></tr>
<tr><th>Test</th><th>Test Requirements</th></tr>
<tr><td>Dielectric Withstanding Voltage</td><td>When tested as specified, the maximum leakage current shall be 2 milliamperes, and there shall be no evidence of electric breakdown or flashover. The magnitude of the test voltage shall be as specified below
(see MIL-STD-1560 for service rating of insert arrangement)
<table>
<tr><th colspan="5">Test Voltages, AC RMS, 60 Hz</th></tr>
<tr><th>Altitude</th><th>Service Rating M</th><th>Service Rating N</th><th>Service Rating I</th><th>Service Rating II</th></tr>
<tr><td>Sea level</td><td>1300</td><td>1000</td><td>1800</td><td>2300</td></tr>
<tr><td>50,000 feet</td><td>550</td><td>400</td><td>600</td><td>800</td></tr>
<tr><td>70,000 feet</td><td>350</td><td>260</td><td>400</td><td>500</td></tr>
<tr><td>100,000 feet</td><td>200</td><td>200</td><td>200</td><td>200</td></tr>
</table></td></tr>
<tr><td>Insert Retention</td><td>Unmated connectors shall retain their inserts in their proper location in the shell and there shall be no evidence of cracking, breaking, separation from the shell, or loosening of parts when subjected to 100 psi with a 25 psi minimum force.</td></tr>
<tr><td>Salt Spray (Corrosion)</td><td>When tested in accordance with EIA-364-26, meets appropriate electrical and mechanical requirements and shows no exposure of base metal after 500 hours of salt spray</td></tr>
<tr><td>Contact Resistance at 25° C</td><td>Contacts in the mated condition shall meet the contact resistance requirements of the table shown below. Appropriate compensation may be made for resistance in the measured value which is due to an additional length of wire included in the measurement.
<table>
<tr><th rowspan="2">Class</th><th rowspan="2">Contact Size</th><th rowspan="2">Wire Size</th><th rowspan="2">Test Amperes</th><th colspan="2">Millivolt Drop Maximum</th></tr>
<tr><th>Initial</th><th>After Conditioning</th></tr>
<tr><td rowspan="5">H, N and Y</td><td>12</td><td>12</td><td>17</td><td>85</td><td>100</td></tr>
<tr><td>16</td><td>16</td><td>10</td><td>85</td><td>100</td></tr>
<tr><td>20</td><td>20</td><td>5</td><td>60</td><td>75</td></tr>
<tr><td>22D</td><td>22</td><td>3</td><td>85</td><td>95</td></tr>
<tr><td>23-22</td><td>22</td><td>3</td><td>85</td><td>95</td></tr>
</table></td></tr>
<tr><td>Contact Retention</td><td>The axial displacement of the contact shall not exceed .012 inch (0.30 mm).
No damage to contacts or inserts shall result.</td></tr>
<tr><td>Vibration</td><td>There shall be no electrical discontinuity and there shall be no disengagement of the mated connectors, backing off of the coupling mechanism, evidence of cracking, breaking, or loosening of parts.</td></tr>
<tr><td>Shock</td><td>There shall be no electrical discontinuity and there shall be no disengagement of mated connectors, evidence of cracking, breaking, or loosening of parts
Standard shock (all series). Connectors shall be tested in accordance with test procedure EIA-364-27 and any additional details noted.
High-impact shock. Applicable to series I, III and IV only. Wired and mated connectors shall be tested in accordance with MIL-S-901, grade A and in accordance with any modifications or additions noted. The wire bundle shall be provided with a straight, environmental, backshell, category 2B in accordance with SAE-AS85049, the longest length available per shell size. Discontinuity monitoring shall be performed in accordance with EIA-364-46.</td></tr>
</table>

© 2022 Glenair, Inc • 1211 Air Way, Glendale, CA 91201 • 818-247-6000 • www.glenair.com • U.S. CAGE code 06324 • SuperNine® Catalog
Dimensions in Inches (millimeters) are subject to change without notice.

SuperNine® Glass seal hermetic

MIL-DTL-38999 Series III Type

Performance specifications

<table>
<tr><th colspan="2">Performance Specifications, IAW MIL-DTL-38999 Series III REV. M, Glenair SuperNine</th></tr>
<tr><th>Test</th><th>Test Requirements</th></tr>
<tr><td>EMI Ground Spring Forces</td><td>The forces necessary to engage and separate EMI plugs with receptacle shells shall be within the values specified in the table shown below:
<table>
<tr><th colspan="5">Axial force for Series III</th></tr>
<tr><th rowspan="2">Shell size</th><th>Maximum</th><th>Minimum</th><th>Maximum</th><th>Minimum</th></tr>
<tr><th>Pounds</th><th>Newtons</th><th>Pounds</th><th>Newton</th></tr>
<tr><td>8/9</td><td>25</td><td>111</td><td>0.5</td><td>2</td></tr>
<tr><td>10/11</td><td>25</td><td>111</td><td>0.5</td><td>2</td></tr>
<tr><td>12/13</td><td>30</td><td>133</td><td>0.5</td><td>2</td></tr>
<tr><td>14/15</td><td>30</td><td>133</td><td>0.5</td><td>2</td></tr>
<tr><td>16/17</td><td>35</td><td>156</td><td>0.5</td><td>2</td></tr>
<tr><td>18/19</td><td>35</td><td>156</td><td>0.5</td><td>2</td></tr>
<tr><td>20/21</td><td>35</td><td>156</td><td>0.5</td><td>2</td></tr>
<tr><td>22/23</td><td>35</td><td>156</td><td>0.5</td><td>2</td></tr>
<tr><td>24/25</td><td>35</td><td>156</td><td>0.5</td><td>2</td></tr>
</table></td></tr>
<tr><td>EMI Shielding</td><td>Effective over a range of 100 MHz to 10 GHz with a minimum 50dB effectiveness at 10GHz, in accordance with test method EIA-364-10
<table>
<tr><th rowspan="2">Frequency
MHz</th><th>Leakage Attenuation (dB) Minimum</th></tr>
<tr><th>Series III & IV (Class H &Y)</th></tr>
<tr><td>100</td><td>80</td></tr>
<tr><td>200</td><td>75</td></tr>
<tr><td>300</td><td>73</td></tr>
<tr><td>400</td><td>71</td></tr>
<tr><td>800</td><td>66</td></tr>
<tr><td>1,000</td><td>65</td></tr>
<tr><td>1,500</td><td>59</td></tr>
<tr><td>2,000</td><td>55</td></tr>
<tr><td>3,000</td><td>52</td></tr>
<tr><td>4,000</td><td>50</td></tr>
<tr><td>6,000</td><td>48</td></tr>
<tr><td>10,000</td><td>45</td></tr>
</table></td></tr>
<tr><td>Fluid Immersion</td><td>Designed to function in all fluids encountered in any modern military or aerospace environment. Tested in accordance with test procedure EIA-364-10. Connectors shall be tested for coupling torque and dielectric withstanding voltage at sea level within 3 hours of fluid immersion cycles.</td></tr>
<tr><td>Contact Engagement and Separating Forces</td><td>Contact engagement and separating forces shall be within the limits, applicable to hermetically sealed connectors with sockets only. As specified in SAE-AS39029.</td></tr>
<tr><td>Resistance to Probe Damage</td><td>Contacts shall withstand the bending moment and depth of test probe insertion without evidence of damage that would interfere with the mechanical or electrical performance.</td></tr>
</table>

© 2022 Glenair, Inc • 1211 Air Way, Glendale, CA 91201 • 818-247-6000 • www.glenair.com • U.S. CAGE code 06324 • SuperNine® Catalog
Dimensions in Inches (millimeters) are subject to change without notice.

MIL-DTL-38999 Contact Materials and Specifications		
Component	**Material**	**Notes**
Pin Contact, Hermetic	Nickel-iron alloy per ASTM F30 (Alloy 52),50 microinches gold plated per ASTM B488 Type II Code C Class 1,27 over nickel plate per QQ-N-290 Class 2, 50-100 microinches	Ferromagnetic material.
Socket Contact	Beryllium copper alloy per ASTM B197, 50 microinches gold plated per ASTM B488 Type II Code C Class 1,27 over nickel plate per QQ-N-290 Class 2, 50-100 microinches.	Approved for Space Flight
Socket Contact Hood	Stainless steel, passivated per AMS-QQ-P-35	Approved for Space Flight

COAX, TWINAX AND QUADRAX CONTACT PERFORMANCE

Contact Performance	
Size and Type	**Frequency**
16 Coax	up to - 500 Mhz
12 Coax	up to - 2 GHz
8 Coax	up to - 1 GHz
8 Twinax (Conc.)	up to - 20 MHz
8 Quadrax	up to - 1 GHz

Contact performance varies and is dependent on wire type and contact selection. Due to the wide selection of wire and contact combinations available, Glenair recommends contacting the factory regarding your specific application and setup.

© 2022 Glenair, Inc • 1211 Air Way, Glendale, CA 91201 • 818-247-6000 • www.glenair.com • U.S. CAGE code 06324 • SuperNine® Catalog
Dimensions in Inches (millimeters) are subject to change without notice.

SuperNine® Glass seal hermetic

MIL-DTL-38999 Series III Type

233-265 Wall & weld mnt receptacle with removable crimp contacts

GLASS-SEALED Hermetic CONNECTORS

SUPERNINE GLASS-TO-METAL SEAL HERMETIC CONNECTORS

MIL-DTL-38999 Series III Type SuperNine hermetic receptacles withstand the pressure differentials between internal and external environments without compromising their integrity. Removable crimp contacts provide quick and easy connection to the connector. Hermetic sealing of 1 x 10^{-7} atm cc/s ensures protection against moisture and contaminants, making them ideal for aerospace and defense applications to guarantee reliability in extreme environments, ensuring optimal performance in critical applications. Available in 2 shell styles with accessory threads or integral banding porch options. Rated for temperatures from -55°C to +125°C, they meet stringent military specifications, providing exceptional resistance to shock (up to 100g), vibration (up to 20g), and corrosion (salt spray per ASTM B117).

PERFORMANCE SPECIFICATIONS

- Hermeticity: <1 x 10^{-7} sccHe/sec @ one ATM differential. Not for use in liquid atmosphere.
- I.R.: 5 gigaohms min @ 500 VDC
- See D.W.V. Voltage Rating Table

MATERIAL/FINISH:

- Shell, jam nut: see Part No. Details table
- Contacts, pin: alloy 52/gold plated
- Insulator, hermetic: vitreous glass
- Socket contact: copper alloy/gold plated
- Insulator hermetic: fused vitreous glass
- Insulators: high grade rigid dielectric
- Seals: fluorosilicone

NOTES:

1. Crimp removable socket contacts to conform to SAE AS39029/57-359 (# 12), AS39029/57-358 (# 16), AS39029/57-357 (# 20) and AS39029/57-354 (# 22D) or Glenair 809-002 socket (#23) (supplied loose).

Part Number Development

Sample Part Number	233-265	-H2	Z1	17-26	P	N
Series / Basic Part No.	Series 23 SuperNine Hermetic					
Connector Style	**H2** = Wall Mount with Accessory Threads **BH2** = Wall Mount with Integral Banding Porch **H8** = Weld Mount with Accessory Threads **BH8** = Weld Mount with Banding Porch					
Finish*	**Z1** = CRES, Passivated **ZL** = CRES, Nickel Finish					
Shell Size/Insert Arrangement*	Per MIL-DTL-38999/MIL-STD-1560 See page A-8 for Insert Arrangements					
Contact Style	**P** = Pin **S** = Socket					
Polarization	**A, B, C, D, E, N** = Normal					

Modification codes may be added directly to the end of any valid part number

Polarization Table

Shell Sizes: 9					Shell Sizes: 11, 13, 15					Shell Sizes: 17, 19, 21, 23, 25				
Pos	A°	B°	C°	D°	Pos	A°	B°	C°	D°	Pos	A°	B°	C°	D°
N	105	140	215	265	N	95	141	208	236	N	80	142	196	293
A	102	132	248	320	A	113	156	182	292	A	135	170	200	310
B	80	118	230	312	B	90	145	195	252	B	49	169	200	244
C	35	140	205	275	C	53	156	220	255	C	66	140	200	257
D	64	155	234	304	D	119	146	176	298	D	62	145	180	280
E	91	131	197	240	E	51	141	184	242	E	79	153	197	272

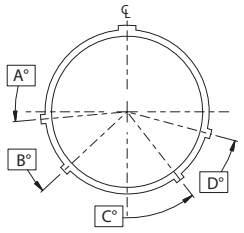

FACE VIEW - RECEPTACLE

DWV Voltage Levels At Sea Level

Service Rating	Voltage AC RMS 60hz	Service Rating	Voltage AC RMS 60hz
M	1300 VAC	II	2300 VAC
I	1800 VAC	N	1000 VAC

Table I: Insert Arrangements

Shell Size	Layout	No. of Pins			
		22D	20	16	12
8	-35	6			
8	-98		3		
10	-5		5		
10	-98		6		
10	-99		7		
10	-35	13			
10	-2			2	
12	-4			4	
12	-8		8		
12	-98		10		
12	-35	22			
14	-5			5	
14	-15		14	1	
14	-18		18		
14	-19		19		
14	-35	37			
14	-97		8	4	
16	-6				6

Table I: Insert Arrangements

Shell Size	Layout	No. of Pins			
		22D	20	16	12
16	-8			8	
16	-26		26		
16	-35	55			
16	-99		21	2	
18	-11			11	
18	-28		26	2	
18	-30		29	1	
18	-32		32		
18	-35	66			
18	-45	67			
20	-11				11
20	-16			16	
20	-24		24		
20	-25		25		
20	-27		27		
20	-29		19	4	4
20	-35	79			
20	-39		37	2	

Table I: Insert Arrangements

Shell Size	Layout	No. of Pins			
		22D	20	16	12
20	-41		41		
22	-21			21	
22	-32		32		
22	-34		34		
22	-35	100			
22	-36		36		
22	-53		53		
22	-55		55		
22	-97			16	
22	-99			11	
24	-4		48	8	
24	-19				19
24	-24			12	12
24	-29			29	
24	-35	128			
24	-43		23	20	
24	-61		61		

© 2022 Glenair, Inc • 1211 Air Way, Glendale, CA 91201 • 818-247-6000 • www.glenair.com • U.S. CAGE code 06324 • SuperNine® Catalog
Dimensions in Inches (millimeters) are subject to change without notice.

Rev. 02.27.24

SuperNine® Glass seal hermetic

MIL-DTL-38999 Series III Type

233-265 Wall & weld mnt receptacle with removable crimp contacts

233-265-H2 AND BH2 BOX MOUNT RECEPTACLE

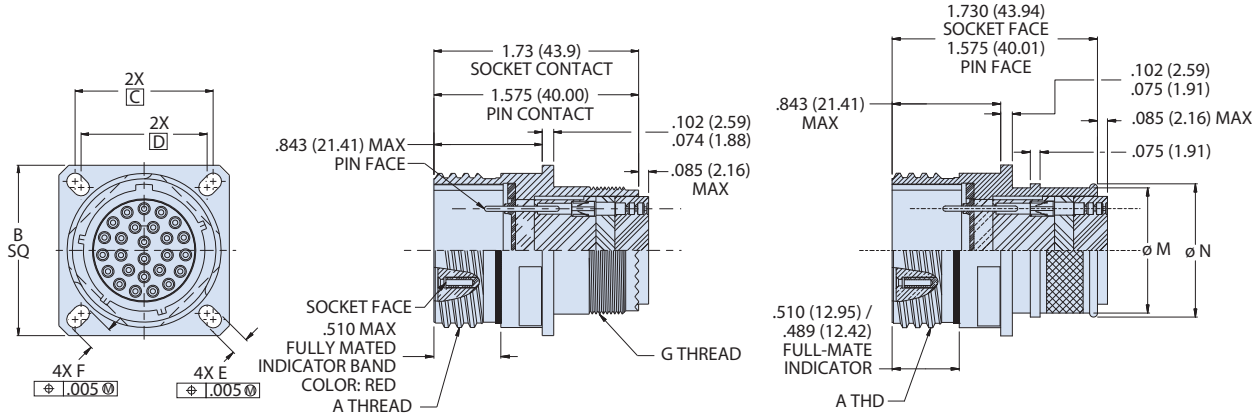

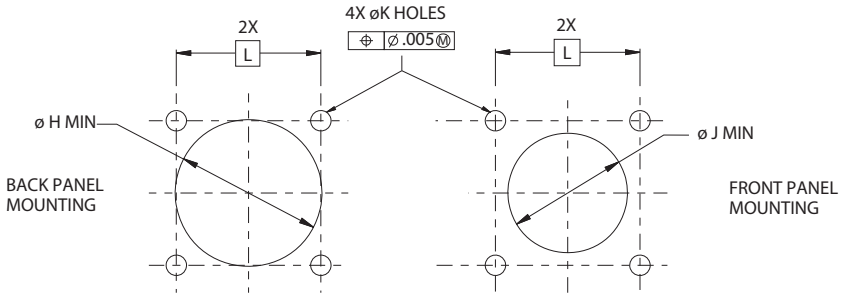

Recommended Mounting Holes

Dimensions														
Shell Size Code	Shell Size	A Thread	B Sq	C Bsc	D Bsc	E	F	G Thread	ØH Min	Ø J Min	Ø K Holes	L Bsc	Øm	Øn
A	9	.6250-.1P-.3L-TS-2A	.949 (24.10) .925 (23.50)	.719 (18.26)	.594 (15.09)	.136 (3.45) .120 (3.05)	.224 (5.69) .208 (5.28)	M12 X 1.0-6g .100R	.656 (16.66)	.516 (13.11)	.133 (3.38) .123 (3.12)	.719 (18.26)	.475 (12.07)	.538 (13.67)
B	11	.7500-.1P-.3L-TS-2A	1.043 (26.49) 1.019 (25.88)	.812 (20.62)	.719 (18.26)		.202 (5.13) .186 (4.72)	M15 X 1.0-6g .100R	.796 (20.22)	.625 (15.88)		.812 (20.62)	.600 (15.24)	.662 (16.81)
C	13	.8750-.1P-.3L-TS-2A	1.138 (28.91) 1.114 (28.30)	.906 (23.01)	.812 (20.62)			M18 X 1.0-6g .100R	.922 (23.42)	.750 (19.05)		.906 (23.01)	.700 (17.78)	.762 (19.35)
D	15	1.0000-.1P-.3L-TS-2A	1.232 (31.29) 1.208 (30.68)	.969 (24.61)	.906 (23.01)		.181 (4.60) .165 (4.19)	M22 X 1.0-6g .100R	1.047 (26.59)	.906 (23.01)		.969 (24.61)	.835 (21.21)	.898 (22.81)
E	17	1.1875-.1P-.3L-TS-2A	1.323 (33.60) 1.299 (32.99)	1.062 (26.97)	.969 (24.61)		.202 (5.13) .186 (4.72)	M25 X 1.0-6g .100R	1.219 (30.96)	1.016 (25.81)		1.062 (26.97)	.960 (24.38)	1.022 (25.96)
F	19	1.2500-.1P-.3L-TS-2A	1.449 (36.80) 1.425 (36.20)	1.156 (29.36)	1.062 (26.97)			M28 X 1.0-6g .100R	1.297 (32.94)	1.141 (28.98)		1.156 (29.36)	1.062 (26.97)	1.125 (28.58)
G	21	1.3750-.1P-.3L-TS-2A	1.575 (40.00) 1.551 (39.40)	1.250 (31.75)	1.156 (29.36)			M31 X 1.0-6g .100R	1.422 (36.12)	1.266 (32.16)		1.250 (31.75)	1.188 (30.18)	1.250 (31.75)
H	23	1.5000-.1P-.3L-TS-2A	1.701 (43.21) 1.677 (42.60)	1.375 (34.92)	1.250 (31.75)	.162 (4.11) .146 (3.71)	.250 (6.35) .234 (5.94)	M34 X 1.0-6g .100R	1.547 (39.29)	1.375 (34.92)	.159 (4.04) .149 (3.78)	1.375 (34.92)	1.275 (32.39)	1.338 (33.99)
J	25	1.6250-.1P-.3L-TS-2A	1.823 (46.30) 1.799 (45.69)	1.500 (38.10)	1.375 (34.92)			M37 X 1.0-6g .100R	1.672 (42.47)	1.484 (37.69)	.155 (3.94) .145 (3.68)	1.500 (38.10)	1.475 (37.47)	1.538 (39.07)

© 2022 Glenair, Inc • 1211 Air Way, Glendale, CA 91201 • 818-247-6000 • www.glenair.com • U.S. CAGE code 06324 • SuperNine® Catalog
Dimensions in Inches (millimeters) are subject to change without notice.

Rev. 02.27.24

SuperNine® Glass seal hermetic

MIL-DTL-38999 Series III Type

233-265 Wall & weld mnt receptacle with removable crimp contacts

GLASS-SEALED Hermetic CONNECTORS

233-265-H8 AND BH8 WELD MOUNT RECEPTACLE

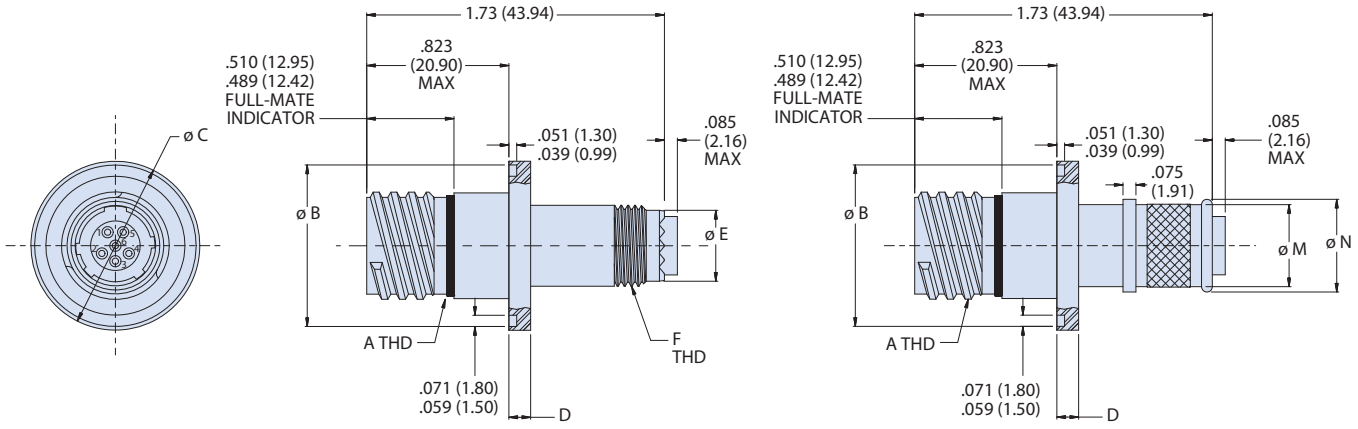

Panel Cutout Dimensions				
SHELL SIZE CODE	SHELL SIZE	Ø G	ØH MIN	DEPTH J ±.005
A	9	.990 (25.15)/.985 (25.02)	.525 (13.34)	.126 (3.20)
B	11	1.112 (28.24)/1.107 (28.12)	.635 (16.14)	.126 (3.20)
C	13	1.238 (31.45)/1.233 (31.32)	.760 (19.30)	.126 (3.20)
D	15	1.364 (34.65)/1.359 (34.52)	.925 (23.50)	.126 (3.20)
E	17	1.451 (36.86)/1.446 (36.73)	1.035 (26.29)	.126 (3.20)
F	19	1.597 (40.56)/1.592 (40.44)	1.155 (29.34)	.126 (3.20)
G	21	1.738 (44.15)/1.733 (44.02)	1.275 (32.39)	.126 (3.20)
H	23	1.894 (48.11)/1.899 (48.23)	1.395 (35.43)	.157 (3.99)
J	25	1.990 (50.55)/1.985 (50.42)	1.525 (38.74)	.157 (3.99)

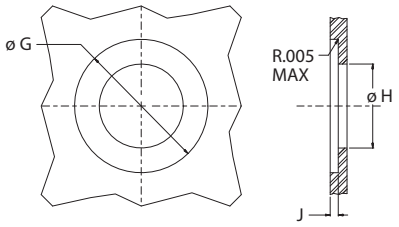

Dimensions								
Shell Size	A Thread	ØB ±.006	ØC ±.006	D	ØE ±.003	F Thd Iso Metric	ØM	ØN
9	.6250-.1P-.3L-TS-2A	.935 (23.75)	.978 (24.84)	.131 (3.33)/.121 (3.07)	.413 (10.49)	M12 X 1.0-6G	.475 (12.07)	.538 (13.67)
11	.7500-.1P-.3L-TS-2A	1.057 (26.85)	1.100 (27.94)	.131 (3.33)/.121 (3.07)	.531 (13.49)	M15 X 1.0-6G	.600 (15.24)	.662 (16.81)
13	.8750-.1P-.3L-TS-2A	1.183 (30.05)	1.226 (31.14)	.131 (3.33)/.121 (3.07)	.650 (16.51)	M18 X 1.0-6G	.700 (17.78)	.762 (19.35)
15	1.0000-.1P-.3L-TS-2A	1.309 (33.25)	1.352 (34.34)	.131 (3.33)/.121 (3.07)	.807 (20.50)	M22 X 1.0-6G	.835 (21.21)	.898 (22.81)
17	1.1875-.1P-.3L-TS-2A	1.396 (35.46)	1.438 (36.53)	.131 (3.33)/.121 (3.07)	.925 (23.50)	M25 X 1.0-6G	.390 (9.91)	1.022 (25.96)
19	1.2500-.1P-.3L-TS-2A	1.541 (39.14)	1.585 (40.26)	.131 (3.33)/.121 (3.07)	1.043 (26.49)	M28 X 1.0-6G	1.062 (26.97)	1.125 (28.58)
21	1.3750-.1P-.3L-TS-2A	1.683 (42.75)	1.726 (43.84)	.131 (3.33)/.121 (3.07)	1.161 (29.49)	M31 X 1.0-6G	1.188 (30.18)	1.250 (31.75)
23	1.5000-.1P-.3L-TS-2A	1.848 (46.94)	1.892 (48.06)	.162 (4.11)/.152 (3.86)	1.279 (32.49)	M34 X 1.0-6G	1.275 (32.39)	1.338 (33.99)
25	1.6250-.1P-.3L-TS-2A	1.935 (49.15)	1.978 (50.24)	.162 (4.11)/.152 (3.86)	1.397 (35.48)	M37 X 1.0-6G	1.475 (37.47)	1.538 (39.07)

© 2022 Glenair, Inc • 1211 Air Way, Glendale, CA 91201 • 818-247-6000 • www.glenair.com • U.S. CAGE code 06324 • SuperNine® Catalog
Dimensions in Inches (millimeters) are subject to change without notice.

Rev. 02.27.24

SuperNine® Glass seal hermetic

MIL-DTL-38999 Series III Type

233-265 Jam nut mount receptacles with removable crimp contacts

MIL-DTL-38999 Series III Type SuperNine single and dual O-ring hermetic receptacles withstand the pressure differentials between internal and external environments without compromising their integrity. Hermetic sealing of 1 x 10^{-7} atm cc/s ensures protection against moisture and contaminants, making them ideal for aerospace and defense applications to guarantee reliability in extreme environments, ensuring optimal performance in critical applications. Available with accessory threads or banding porch options and pin or socket shielded contacts. Rated for temperatures from -55°C to +125°C, they meet stringent military specifications, providing exceptional resistance to shock (up to 100g), vibration (up to 20g), and corrosion (salt spray per ASTM B117).

PERFORMANCE SPECIFICATIONS

- Hermeticity: <1 x 10^{-7} sccHe/sec @ one ATM differential. Not for use in liquid atmosphere.
- I.R.: 5 gigaohms min @ 500 VDC
- See D.W.V. Voltage Rating Table

MATERIAL/FINISH:

- Shell receptacle, jam nut - 300 series cres/see part number development
- Pin contact - alloy 52/gold plated
- Socket contact - copper alloy/gold plated
- Insulator - fused vitreous glass
- Insulators - high grade rigid dielectric
- Seals - fluorosilicone

NOTES:

1. Crimp removable socket contacts to conform to SAE AS39029/57-359 (# 12), AS39029/57-358 (# 16), AS39029/57-357 (# 20) and AS39029/57-354 (# 22D) or Glenair 809-002 socket (#23) (supplied loose).

Part Number Development

Sample Part Number	233-265	-H2	Z1	17-26	P	N	-02
Series / Basic Part No.	Series 23 Hermetic Receptacles						
Connector Style (Jam Nut Mount)	**-H7** = Accessory Threads **-BH7** = Integral Banding Porch **-DH7** = Dual O-ring w/ Accessory Threads **-DBH7** = Dual O-ring w/ Banding Porch						
Finish*	**Z1** = CRES, Passivated **ZL** = CRES, Nickel Finish						
Shell Size/Insert Arrangement*	Per MIL-DTL-38999/MIL-STD-1560 See page A-8 for Insert Arrangements						
Contact Style	**P** = Pin **S** = Socket						
Polarization*	**A, B, C, D, E, N** = Normal						
Panel Thickness	**-01** = .200 inches max **-02** = .375 inches max						

Modification codes may be added directly to the end of any valid part number

Polarization Table

Shell Sizes: 9					Shell Sizes: 11, 13, 15					Shell Sizes: 17, 19, 21, 23, 25				
Pos	A°	B°	C°	D°	Pos	A°	B°	C°	D°	Pos	A°	B°	C°	D°
N	105	140	215	265	N	95	141	208	236	N	80	142	196	293
A	102	132	248	320	A	113	156	182	292	A	135	170	200	310
B	80	118	230	312	B	90	145	195	252	B	49	169	200	244
C	35	140	205	275	C	53	156	220	255	C	66	140	200	257
D	64	155	234	304	D	119	146	176	298	D	62	145	180	280
E	91	131	197	240	E	51	141	184	242	E	79	153	197	272

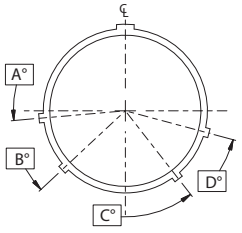

FACE VIEW - RECEPTACLE

DWV Voltage Levels At Sea Level

Service Rating	Voltage AC RMS 60hz	Service Rating	Voltage AC RMS 60hz
M	1300 VAC	II	2300 VAC
I	1800 VAC	N	1000 VAC

Table I: Insert Arrangements

Shell Size	Layout	No. of Pins			
		22D	20	16	12
8	-35	6			
8	-98		3		
10	-5		5		
10	-98		6		
10	-99		7		
10	-35	13			
10	-2			2	
12	-4			4	
12	-8		8		
12	-98		10		
12	-35	22			
14	-5			5	
14	-15		14	1	
14	-18		18		
14	-19		19		
14	-35	37			
14	-97		8	4	
16	-6				6

Table I: Insert Arrangements

Shell Size	Layout	No. of Pins			
		22D	20	16	12
16	-8			8	
16	-26		26		
16	-35	55			
16	-99		21	2	
18	-11			11	
18	-28		26	2	
18	-30		29	1	
18	-32		32		
18	-35	66			
18	-45	67			
20	-11				11
20	-16			16	
20	-24		24		
20	-25		25		
20	-27		27		
20	-29		19	4	4
20	-35	79			
20	-39		37	2	

Table I: Insert Arrangements

Shell Size	Layout	No. of Pins			
		22D	20	16	12
20	-41		41		
22	-21			21	
22	-32		32		
22	-34		34		
22	-35	100			
22	-36		36		
22	-53		53		
22	-55		55		
22	-97			16	
22	-99			11	
24	-4		48	8	
24	-19				19
24	-24			12	12
24	-29			29	
24	-35	128			
24	-43		23	20	
24	-61		61		

© 2022 Glenair, Inc • 1211 Air Way, Glendale, CA 91201 • 818-247-6000 • www.glenair.com • U.S. CAGE code 06324 • SuperNine® Catalog

Dimensions in Inches (millimeters) are subject to change without notice.

SuperNine® Glass seal hermetic

MIL-DTL-38999 Series III Type

233-265 Jam nut mount receptacles with removable crimp contacts

GLASS-SEALED Hermetic CONNECTORS

233-265-H7 AND BH7 JAM NUT RECEPTACLE WITH ACCESSORY THREAD OR BANDING PORCH

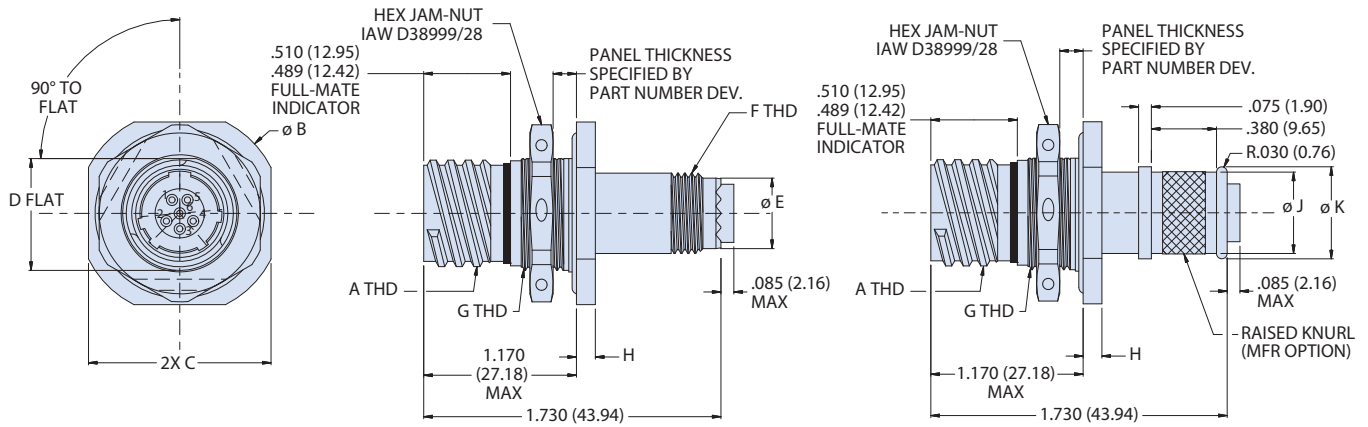

ACCESSORY THREAD

BANDING PORCH

Dimensions											
SHELL SIZE	SHELL SIZE CODE	A THREAD -0.1P-0.3L-TS	ØB	C A/F ±.015	D FLAT ±0.016	ØE +.003	G THREAD ISO METRIC	F THREAD ISO METRIC	H ±.008	ØJ	ØK
9	A	.625	1.500 (38.10)	1.375 (34.93)	1.062 (26.97)	.413 (10.49)	M17 X 1.0-6G	M12 X 1.0-6G	.106 (2.69)	.475 (12.07)	.538 (13.67)
11	B	.750	1.625 (41.28)	1.500 (38.10)	1.252 (31.80)	.531 (13.49)	M20 X 1.0-6G	M15 X 1.0-6G	.106 (2.69)	.600 (15.24)	.662 (16.81)
13	C	.875	1.752 (44.50)	1.626 (41.30)	1.374 (34.90)	.650 (16.51)	M25 X 1.0-6G	M18 X 1.0-6G	.106 (2.69)	.700 (17.78)	.762 (19.35)
15	D	1.000	1.937 (49.20)	1.811 (46.00)	1.500 (38.10)	.807 (20.50)	M28 X 1.0-6G	M22 X 1.0-6G	.106 (2.69)	.835 (21.21)	.898 (22.81)
17	E	1.1875	2.063 (52.40)	1.937 (49.20)	1.626 (41.30)	.925 (23.50)	M32 X 1.0-6G	M25 X 1.0-6G	.106 (2.69)	.960 (24.38)	1.022 (25.96)
19	F	1.250	2.189 (55.60)	2.063 (52.40)	1.811 (46.00)	1.043 (26.49)	M35 X 1.0-6G	M28 X 1.0-6G	.138 (3.51)	1.062 (26.97)	1.125 (28.58)
21	G	1.375	2.311 (58.70)	2.189 (55.60)	1.937 (49.20)	1.161 (29.49)	M38 X 1.0-6G	M31 X 1.0-6G	.138 (3.51)	1.188 (30.18)	1.250 (31.75)
23	H	1.500	2.500 (63.50)	2.300 (58.42)	2.063 (52.40)	1.279 (32.49)	M41 X 1.0-6G	M34 X 1.0-6G	.138 (3.51)	1.275 (32.39)	1.338 (33.99)
25	J	1.625	2.625 (66.68)	2.400 (60.96)	2.189 (55.60)	1.397 (35.48)	M44 X 1.0-6G	M37 X 1.0-6G	.138 (3.51)	1.475 (37.47)	1.538 (39.07)

Panel Cut-out			
SHELL SIZE	SHELL SIZE CODE	ØM ±.005	N FLAT ±.005 EX SIZE 9
9	A	.703 (17.86)/.693 (17.60)	.661 (16.79)/.655 (16.64)
11	B	.835 (21.21)/.825 (20.96)	.771 (19.58)/.761 (19.33)
13	C	1.020 (25.91)/1.010 (25.65)	.955 (24.26)/.945 (24.00)
15	D	1.145 (29.08)/1.135 (28.83)	1.085 (27.56)/1.075 (27.30)
17	E	1.270 (32.26)/1.260 (32.00)	1.210 (30.73)/1.200 (30.48)
19	F	1.395 (35.43)/1.385 (35.18)	1.335 (33.91)/1.325 (33.65)
21	G	1.520 (38.61)/1.510 (38.35)	1.460 (37.08)/1.450 (36.83)
23	H	1.645 (41.78)/1.635 (41.53)	1.585 (40.26)/1.575 (40.00)
25	J	1.770 (44.96)/1.760 (44.70)	1.710 (43.43)/1.700 (43.18)

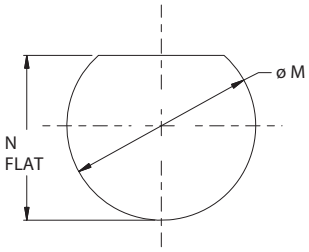

RECOMMENDED PANEL CUT-OUT

© 2022 Glenair, Inc • 1211 Air Way, Glendale, CA 91201 • 818-247-6000 • www.glenair.com • U.S. CAGE code 06324 • SuperNine® Catalog
Dimensions in Inches (millimeters) are subject to change without notice.

SuperNine® Glass seal hermetic

MIL-DTL-38999 Series III Type

233-265 Jam nut mount receptacles with removable crimp contacts

233-265-DH7 AND DBH7 JAM-NUT MOUNT RECEPTACLE

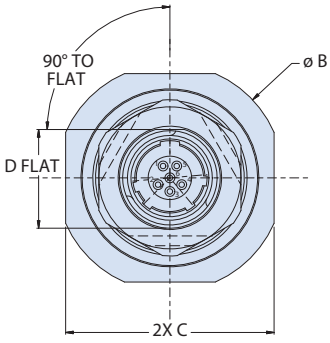

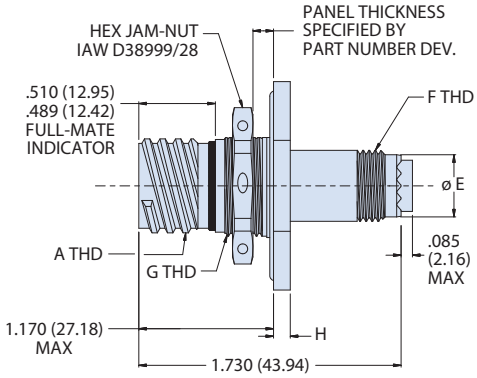

ACCESSORY THREAD

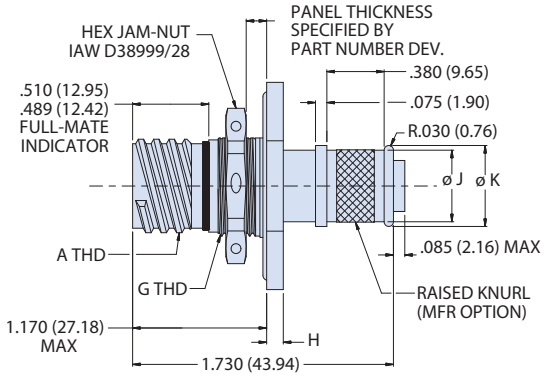

BANDING PORCH

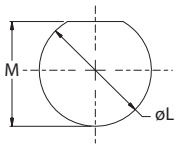

Recommended Panel Cutout

Panel Cutout Dimensions		
SHELL SIZE	ø L ±.005	M ±.005 EX SZ 9
9	0.698 (17.73)	.661/.656 (16.79/ 16.66)
11	0.830 (21.08)	0.766 (19.46)
13	1.015 (25.78)	0.950 (24.13)
15	1.140 (28.96)	1.080 (27.43)
17	1.265 (32.13)	1.205 (30.61)
19	1.390 (35.31)	1.330 (33.78)
21	1.515 (38.48)	1.455 (36.96)
23	1.640 (41.66)	1.580 (40.13)
25	1.765 (44.83)	1.705 (43.31)

Dimensions										
SHELL SIZE	A THREAD -0.1P-0.3L-TS	ø B	C A/F ±.015	D FLAT ±.005	ø E ±.003	F THREAD ISO METRIC	G THREAD ISO METRIC	H ±.008	ØJ	ø K
9	0.625 (15.88)	1.500 (38.10)	1.375 (34.93)	0.650 (16.51)	.413 (10.49)	M12 X 1.0-6G	M17 X 1.0-6g	0.106 (2.69)	0.475 (12.07)	0.538 (13.67)
11	0.750 (19.05)	1.625 (41.28)	1.500 (38.10)	0.750 (19.05)	.513 (13.03)	M15 X 1.0-6G	M20 X 1.0-6g	0.106 (2.69)	0.600 (15.24)	0.662 (16.81)
13	0.875 (22.23)	1.752 (44.50)	1.626 (41.30)	0.937 (23.80)	.650 (16.51)	M18 X 1.0-6G	M25 X 1.0-6g	0.106 (2.69)	0.700 (17.78)	0.762 (19.35)
15	1.000 (25.40)	1.937 (49.20)	1.811 (46.00)	1.061 (26.95)	.807 (20.50)	M22 X 1.0-6G	M28 X 1.0-6g	0.106 (2.69)	0.835 (21.21)	0.898 (22.81)
17	1.187 (30.15)	2.063 (52.40)	1.937 (49.20)	1.186 (30.12)	.925 (23.50)	M25 X 1.0-6G	M32 X 1.0-6g	0.106 (2.69)	0.960 (24.38)	1.022 (25.96)
19	1.250 (31.75)	2.189 (55.60)	2.063 (52.40)	1.311 (33.30)	1.043 (26.49)	M28 X 1.0-6G	M35 X 1.0-6g	0.138 (3.51)	1.062 (26.97)	1.125 (28.58)
21	1.375 (34.92)	2.311 (58.70)	2.189 (55.60)	1.436 (36.47)	1.161 (29.49)	M31 X 1.0-6G	M38 X 1.0-6g	0.138 (3.51)	1.188 (30.18)	1.250 (31.75)
23	1.500 (38.10)	2.500 (63.50)	2.300 (58.42)	1.561 (39.65)	1.279 (32.49)	M34 X 1.0-6G	M41 X 1.0-6g	0.138 (3.51)	1.275 (32.39)	1.338 (33.99)
25	1.625 (41.28)	2.625 (66.68)	2.400 (60.96)	1.686 (42.82)	1.397 (35.48)	M37 X 1.0-6G	M44 X 1.0-6g	0.138 (3.51)	1.475 (37.47)	1.538 (39.07)

© 2022 Glenair, Inc • 1211 Air Way, Glendale, CA 91201 • 818-247-6000 • www.glenair.com • U.S. CAGE code 06324 • SuperNine® Catalog
Dimensions in Inches (millimeters) are subject to change without notice.

Rev 03.06.24

SuperNine® Glass seal hermetic

MIL-DTL-38999 Series III Type

233-266 Receptacle with accessory thread or banding porch

Part Number Development						
Sample Part Number	**233-266**	**-H7**	**Z1**	**9-35**	**P**	**N**
Series / Basic Part No.	Series 23 SuperNine Hermetic					
Connector Style	**H7** = Jam-Nut Mount with Accessory Thread **07** = Jam-Nut Mount with Single Band, Banding Porch					
Finish*	**Z1** = CRES, Passivated **ZL** = CRES, Nickel Finish					
Shell Size/Insert Arrangement*	Per MIL-DTL-38999/MIL-STD-1560					
Contact Style	**P** = Pin, Solder Cup **X** = Pin, Eyelet **S** = Socket, Solder Cup **Z** = Socket, Eyelet					
Polarization*	**A**, **B**, **C**, **D**, **E**, **N** = Normal					

***Refer to Section A for complete details, consult factory for additional options**
Modification codes may be added directly to the end of any valid part number

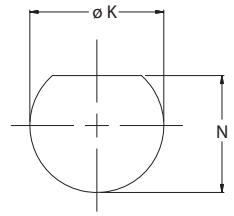

RECOMMENDED PANEL CUT-OUT

Jam-Nut Panel Cut-Out Dimensions			
SHELL SIZE CODE	SHELL SIZE	K DIA	N
A	9	.703 (17.86) .693 (17.60)	.661 (16.79) .655 (16.64)
B	11	.835 (21.21) .825 (20.96)	.771 (19.58) .761 (19.33)
C	13	1.020 (25.91) 1.010 (25.65)	.955 (24.26) .945 (24.00)
D	15	1.145 (29.08) 1.135 (28.83)	1.085 (27.56) 1.075 (27.30)
E	17	1.270 (32.26) 1.260 (32.00)	1.210 (30.73) 1.200 (30.48)
F	19	1.395 (35.43) 1.385 (35.18)	1.335 (33.91) 1.325 (33.65)
G	21	1.520 (38.61) 1.510 (38.35)	1.460 (37.08) 1.450 (36.83)
H	23	1.645 (41.78) 1.635 (41.53)	1.585 (40.26) 1.575 (40.00)
J	25	1.770 (44.96) 1.760 (44.70)	1.710 (43.43) 1.700 (43.18)

Band Platform Dimensions			
SHELL SIZE CODE	SHELL SIZE	øFF	øGG
A	9	.475 (12.07)	.538 (13.67)
B	11	.600 (15.24)	.662 (16.81)
C	13	.700 (17.78)	.762 (19.35)
D	15	.835 (21.21)	.898 (22.81)
E	17	.960 (24.38)	1.022 (25.96)
F	19	1.062 (26.97)	1.125 (28.58)
G	21	1.188 (30.18)	1.250 (31.75)
H	23	1.275 (32.39)	1.338 (33.99)
J	25	1.475 (37.47)	1.538 (39.07)

Material/finish:

- Shell and jam-nut: 300 series CRES per part number development
- Contacts: nickel iron alloy 52/gold plated
- Insulator, hermetic: fused vitreous glass/N.A.
- Insulator, socket: high grade rigid dielectric/N.A.
- O-ring and Seals: fluorosilicone/N.A

NOTES

1. Hermeticity: <1 x 10^-7 ccHe/sec @ 1 ATM, delta pressure
2. Glenair 233-266-H7 and 233-266-07 receptacle connector is designed to mate with any QPL manufacturer's MIL-DTL-38999 series III plug connector having the same insert arrangement, polarization, and opposite contact gender.

© 2022 Glenair, Inc • 1211 Air Way, Glendale, CA 91201 • 818-247-6000 • www.glenair.com • U.S. CAGE code 06324 • SuperNine® Catalog
Dimensions in Inches (millimeters) are subject to change without notice.

SuperNine® Glass seal hermetic

MIL-DTL-38999 Series III Type

233-266 Receptacle with accessory thread or banding porch

233-266-H7 JAM-NUT RECEPTACLE

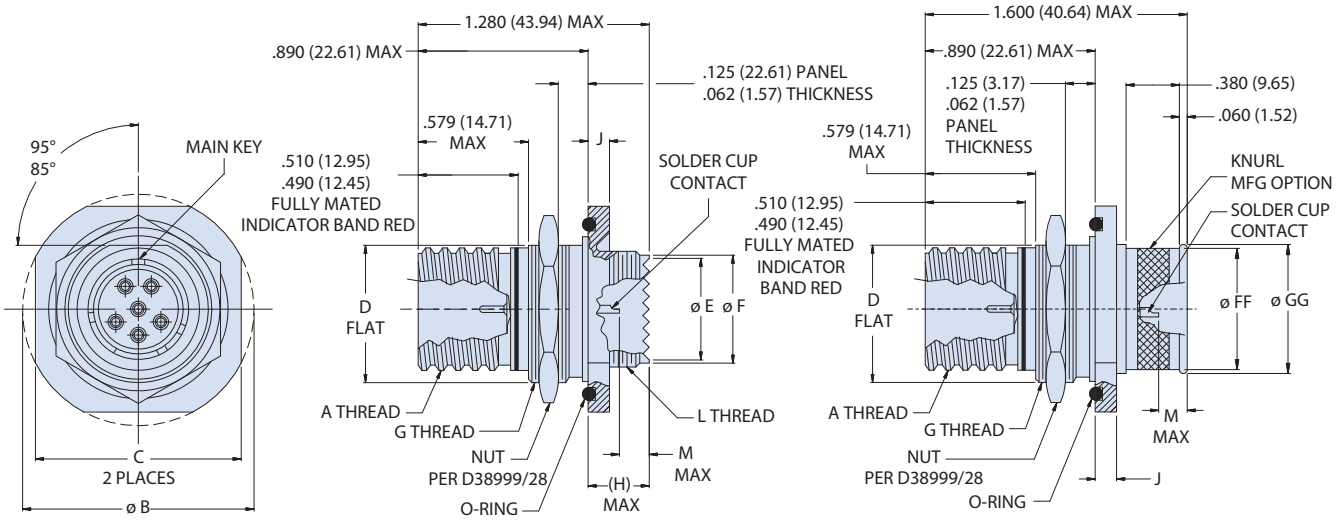

H7 - JAM NUT WITH ACCESSORY THREADS

07 - JAM NUT WITH SINGLE BAND

Dimensions											
SHELL SIZE CODE/ SHELL SIZE REF	A THREAD -0.1P-0.03L-TS	B DIA	C A/F	D FLAT	E DIA MAX	F DIA	ISO METRIC	H MAX	J	L THREAD ISO METRIC	M MAX
a/9	.6250	1.200 (30.48) 1.177 (29.90)	1.078 (27.38) 1.047 (26.59)	.654 (16.61) .645 (16.38)	.346 (8.79)	.416 (10.57) .410 (10.41)	M17 X 1-6g 0.100R	.390 (9.91)	.122 (3.10) .083 (2.11)	M12 X 1-6g 0.100R	.200 (5.08)
11/B	.7500	1.385 (35.18) 1.362 (34.59)	1.267 (32.18) 1.236 (31.39)	.754 (19.15) .745 (18.92)	.475 (12.07)	.534 (13.56) .528 (13.41)	M20 X 1-6g 0.100R	.390 (9.91)		M15 X 1-6g 0.100R	.200 (5.08)
13/C	.8750	1.511 (38.38) 1.488 (37.80)	1.390 (35.31) 1.358 (34.49)	.941 (23.90) .932 (23.67)	.589 (14.96)	.653 (16.59) .647 (16.43)	M25 X 1-6g 0.100R	.390 (9.91)		M18 X 1-6g 0.100R	.200 (5.08)
15/D	1.0000	1.637 (41.58) 1.614 (41.00)	1.515 (38.48) 1.484 (37.69)	1.065 (27.05) 1.056 (26.82)	.714 (18.14)	.810 (20.57) .804 (20.42)	M28 X 1-6g 0.100R	.390 (9.91)		M22 X 1-6g 0.100R	.200 (5.08)
17/E	1.1875	1.763 (44.78) 1.740 (44.20)	1.641 (41.68) 1.610 (40.89)	1.190 (30.23) 1.181 (30.00)	.839 (21.31)	.928 (23.57) .922 (23.42)	M32 X 1-6g 0.100R	.390 (9.91)		M25 X 1-6g 0.100R	.200 (5.08)
19/F	1.2500	1.949 (49.50) 1.925 (48.90)	1.826 (46.38) 1.795 (45.59)	1.315 (33.40) 1.306 (33.17)	.945 (24.00)	1.046 (26.57) 1.040 (26.42)	M35 X 1-6g 0.100R	.390 (9.91)	.153 (3.89) .114 (2.90)	M28 X 1-6g 0.100R	.200 (5.08)
21/G	1.3750	2.075 (52.71) 2.051 (52.10)	1.952 (49.58) 1.921 (48.79)	1.440 (36.58) 1.431 (36.35)	1.070 (27.18)	1.164 (29.57) 1.158 (29.41)	M38 X 1-6g 0.100R	.390 (9.91)		M31 X 1-6g 0.100R	.200 (5.08)
23H	1.5000	2.200 (55.88) 2.177 (55.30)	2.078 (52.78) 2.047 (51.99)	1.565 (39.75) 1.556 (39.52)	1.194 (30.33)	1.282 (32.56) 1.276 (32.41)	M41 X 1-6g 0.100R	.390 (9.91)		M34 X 1-6g 0.100R	.200 (5.08)
25/J	1.6250	2.323 (59.00) 2.299 (58.39)	2.204 (55.98) 2.173 (55.19)	1.690 (42.93) 1.681 (42.70)	1.320 (33.53)	1.400 (35.56) 1.394 (35.41)	M44 X 1-6g 0.100R	.390 (9.91)		M37 X 1-6g 0.100R	.200 (5.08)

© 2022 Glenair, Inc • 1211 Air Way, Glendale, CA 91201 • 818-247-6000 • www.glenair.com • U.S. CAGE code 06324 • SuperNine® Catalog
Dimensions in Inches (millimeters) are subject to change without notice.

SuperNine® Glass seal hermetic

MIL-DTL-38999 Series III Type

233-266 Jam-nut mount with accessory thread or banding porch

Part Number Development						
Sample Part Number	**233-266**	**-H7**	**Z1**	**9-35**	**P**	**N**
Series / Basic Part No.	Series 23 SuperNine Hermetic					
Connector Style	**H7** = Jam-nut Mount with Accessory Thread **07** = Jam-nut Mount Single Band					
Finish*	**Z1** = CRES, Passivated **ZL** = CRES, Electro Depositednickel Finish					
Shell Size/Insert Arrangement*	Shell Sizes: **A**, **B**, **C**, **D**, **E**, **F**, **G**, **H**, **J** Insert Arrangements per MIL-STD-1560. Contact factory for additional arranagement options.					
Contact Style	**P** = Pin, Solder Cup **X** = Pin, Eyelet **S** = Socket, Solder Cup **Z** = Socket, Eyelet					
Polarization*	**A**, **B**, **C**, **D**, **E**, **N** = Normal					

***Refer to Section A for standard insert arrangements and pages D-8 thru D-10 for special shielded contact arrangements, consult factory for additional options**
Modification codes may be added directly to the end of any valid part number

PANEL CUTOUT DIMENSIONS

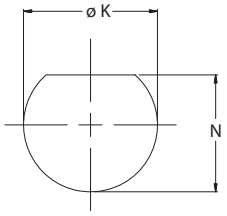

JAM-NUT
RECOMMENDED PANEL

Jam-Nut Mount Panel Cutout Dimensions		
SHELL SIZE	K DIA	N
9	.703 (17.86) .693 (17.60)	.661 (16.79) .655 (16.64)
11	.835 (21.21) .825 (20.96)	.771 (19.58) .761 (19.33)
13	1.020 (25.91) 1.010 (25.65)	.955 (24.26) .945 (24.00)
15	1.145 (29.08) 1.135 (28.83)	1.085 (27.56) 1.075 (27.30)
17	1.270 (32.26) 1.260 (32.00)	1.210 (30.73) 1.200 (30.48)
19	1.395 (35.43) 1.385 (35.18)	1.335 (33.91) 1.325 (33.65)
21	1.520 (38.61) 1.510 (38.35)	1.460 (37.08) 1.450 (36.83)
23	1.645 (41.78) 1.635 (41.53)	1.585 (40.26) 1.575 (40.00)
25	1.770 (44.96) 1.760 (44.70)	1.710 (43.43) 1.700 (43.18)

NOTES

1. Test requirements:
   - DWV: per MIL-STD-160 service rating
   - I.R.: 5000 megOhms at 500 VDC
   - Hermeticity: 1 x 10^{-7} ccHe/sec @ 1 ATM delta pressure
2. Glenair 233-266-H7 is designed to mate to any QPL manufacturer's MIL-DTL-38999 series III plug having the same shell size, insert arrangement, polarization, and opposite contact gender.

Material/finish:

- Shell: 300 series CRES per part number development
- Contacts, hermetic: nickel iron alloy/ gold plated
- Contacts, socket: copper alloy/gold plated
- Insulator, hermetic: fused vitreous glass/N.A.
- Insulator, socket: rigid dielectric/N.A.
- Seals: fluorosilicone/N.A
- O-ring, inner: fluorosilicone rubber
- O-ring, outer: silver plated aluminum in fluorosilicone (choseal 1298 equivalent

DWV Voltage Levels at Sea Level	
Service Rating	Voltage AC RMS 60HZ
M	1300 VAC
I	1800 VAC
II	2300 VAC
N	1000 VAC

© 2022 Glenair, Inc • 1211 Air Way, Glendale, CA 91201 • 818-247-6000 • www.glenair.com • U.S. CAGE code 06324 • SuperNine® Catalog

Dimensions in Inches (millimeters) are subject to change without notice.

SuperNine® Glass seal hermetic

MIL-DTL-38999 Series III Type

233-266 Jam-nut mount with accessory thread or banding porch

233-266-H7 AND -07 JAM-NUT MOUNT RECEPTACLE

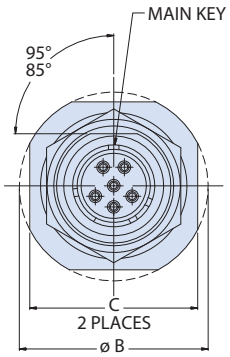

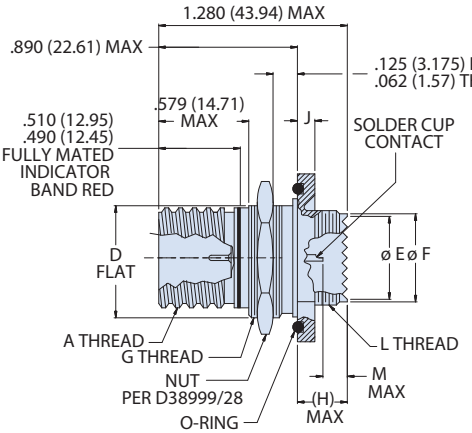

H7 - JAM NUT WITH ACCESSORY THREADS

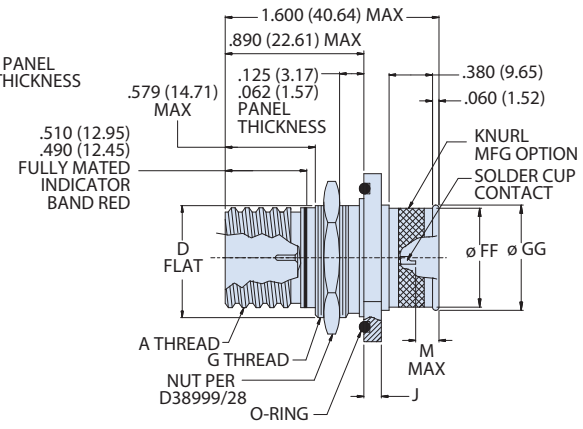

07 - JAM NUT WITH SINGLE BAND

Dimensions											
SHELL SIZE/ CODE	A THREAD -0.1P-0.03L-TS	B DIA	C A/F	D FLAT	E DIA MAX	F DIA	G THD ISO METRIC	H MAX	J	L THREAD ISO METRIC	M MAX
9/A	.6250	1.200 (30.48) 1.177 (29.90)	1.078 (27.38) 1.047 (26.59)	.654 (16.61) .645 (16.38)	.346 (8.79)	.416 (10.57) .410 (10.41)	M17 X 1-6g 0.100R	.390 (9.91)	.122 (3.10) .083 (2.11)	M12 X 1-6g 0.100R	.200 (5.08)
11/B	.7500	1.385 (35.18) 1.362 (34.59)	1.267 (32.18) 1.236 (31.39)	.754 (19.15) .745 (18.92)	.475 (12.07)	.534 (13.56) .528 (13.41)	M20 X 1-6g 0.100R	.390 (9.91)		M15 X 1-6g 0.100R	.200 (5.08)
13/C	.8750	1.511 (38.38) 1.488 (37.80)	1.390 (35.31) 1.358 (34.49)	.941 (23.90) .932 (23.67)	.589 (14.96)	.653 (16.59) .647 (16.43)	M25 X 1-6g 0.100R	.390 (9.91)		M18 X 1-6g 0.100R	.200 (5.08)
15/D	1.0000	1.637 (41.58) 1.614 (41.00)	1.515 (38.48) 1.484 (37.69)	1.065 (27.05) 1.056 (26.82)	.714 (18.14)	.810 (20.57) .804 (20.42)	M28 X 1-6g 0.100R	.390 (9.91)		M22 X 1-6g 0.100R	.200 (5.08)
17/E	1.1875	1.763 (44.78) 1.740 (44.20)	1.641 (41.68) 1.610 (40.89)	1.190 (30.23) 1.181 (30.00)	.839 (21.31)	.928 (23.57) .922 (23.42)	M32 X 1-6g 0.100R	.390 (9.91)		M25 X 1-6g 0.100R	.200 (5.08)
19/F	1.2500	1.949 (49.50) 1.925 (48.90)	1.826 (46.38) 1.795 (45.59)	1.315 (33.40) 1.306 (33.17)	.945 (24.00)	1.046 (26.57) 1.040 (26.42)	M35 X 1-6g 0.100R	.390 (9.91)	.153 (3.89) .114 (2.90)	M28 X 1-6g 0.100R	.200 (5.08)
21/G	1.3750	2.075 (52.71) 2.051 (52.10)	1.952 (49.58) 1.921 (48.79)	1.440 (36.58) 1.431 (36.35)	1.070 (27.18)	1.164 (29.57) 1.158 (29.41)	M38 X 1-6g 0.100R	.390 (9.91)		M31 X 1-6g 0.100R	.200 (5.08)
23H	1.5000	2.200 (55.88) 2.177 (55.30)	2.078 (52.78) 2.047 (51.99)	1.565 (39.75) 1.556 (39.52)	1.194 (30.33)	1.282 (32.56) 1.276 (32.41)	M41 X 1-6g 0.100R	.390 (9.91)		M34 X 1-6g 0.100R	.200 (5.08)
25/J	1.6250	2.323 (59.00) 2.299 (58.39)	2.204 (55.98) 2.173 (55.19)	1.690 (42.93) 1.681 (42.70)	1.320 (33.53)	1.400 (35.56) 1.394 (35.41)	M44 X 1-6g 0.100R	.390 (9.91)		M37 X 1-6g 0.100R	.200 (5.08)

Dimensions		
SHELL SIZE/CODE	ØFF	ØGG
9/A	.475 (12.07)	.538 (13.67)
11/B	.600 (15.24)	.662 (16.81)
13/C	.700 (17.78)	.762 (19.35)
15/D	.835 (21.21)	.898 (22.81)
17/E	.960 (24.38)	1.022 (25.96)
19/F	1.062 (26.97)	1.125 (28.58)
21/G	1.188 (30.18)	1.250 (31.75)
23H	1.275 (32.39)	1.338 (33.99)
25/J	1.475 (37.47)	1.538 (39.07)

© 2022 Glenair, Inc • 1211 Air Way, Glendale, CA 91201 • 818-247-6000 • www.glenair.com • U.S. CAGE code 06324 • SuperNine® Catalog
Dimensions in Inches (millimeters) are subject to change without notice.

Rev. 05.03.2024

SuperNine® Glass seal hermetic

MIL-DTL-38999 Series III Type

233-266 Box mount with accessory thread or banding porch

Part Number Development						
Sample Part Number	**233-266**	**-H7**	**Z1**	**9-35**	**P**	**N**
Series / Basic Part No.	Series 23 SuperNine Hermetic					
Connector Style	**H2** = Box Mount with Accessory Threads **02** = Box Mount with Band Porch					
Finish*	**Z1** = CRES, Passivated **ZL** = CRES, Nickel Finish					
Shell Size/Insert Arrangement*	Per MIL-DTL-38999/MIL-STD-1560					
Contact Style	**P** = Pin, Solder Cup **X** = Pin, Eyelet **S** = Socket, Solder Cup **Z** = Socket, Eyelet					
Polarization*	**A**, **B**, **C**, **D**, **E**, **N** = Normal					

***Refer to Section A for standard insert arrangements and pages D-8 thru D-10 for special shielded contact arrangements, consult factory for additional options**
Modification codes may be added directly to the end of any valid part number

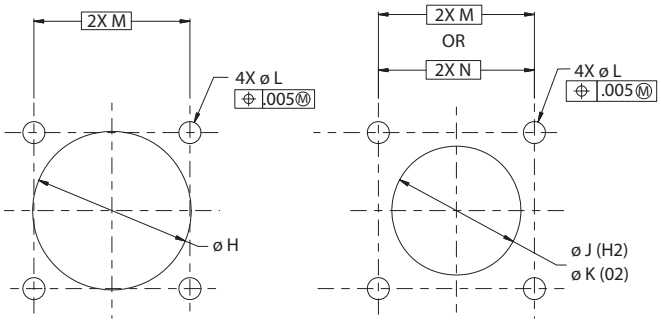

BACK PANEL MOUNTING

FRONT PANEL MOUNTING

Box Mount Panel Cutout Dimensions						
SHELL SIZE	ø H MIN	ø J MIN	ø K MIN	ø L HOLES	M BSC	N BSC
9	0.656 (16.66)	0.516 (13.11)	0.575 (14.60)	0.133 (3.38) 0.123 (3.12)	0.719 (18.26)	0.594 (15.09)
11	0.796 (20.22)	0.625 (15.88)	0.695 (17.65)	0.133 (3.38) 0.123 (3.12)	0.812 (20.62)	0.719 (18.26)
13	0.922 (23.42)	0.750 (19.05)	0.795 (20.19)	0.133 (3.38) 0.123 (3.12)	0.906 (23.01)	0.812 (20.62)
15	1.047 (26.59)	0.906 (23.01)	0.930 (23.62)	0.133 (3.38) 0.123 (3.12)	0.969 (24.61)	0.906 (23.01)
17	1.219 (30.96)	1.016 (25.81)	1.050 (26.67)	0.133 (3.38) 0.123 (3.12)	1.062 (26.97)	0.969 (24.61)
19	1.297 (32.94)	1.141 (28.98)	1.155 (29.34)	0.133 (3.38) 0.123 (3.12)	1.156 (29.36)	1.062 (26.97)
21	1.422 (36.12)	1.266 (32.16)	1.280 (32.51)	0.133 (3.38) 0.123 (3.12)	1.250 (31.75)	1.156 (29.36)
23	1.547 (39.29)	1.375 (34.92)	1.375 (34.92)	0.159 (4.04) 0.149 (3.78)	1.375 (34.92)	1.250 (31.75)
25	1.672 (42.47)	1.484 (37.69)	1.570 (39.88)	0.155 (3.94) 0.145 (3.68)	1.500 (38.10)	1.375 (34.92)

NOTES

1. Test parameters:
   - DWV: per MIL-STD-160 service rating
   - I.R.: 5000 megOhms minimum at 500 VDC
   - Hermeticity: 1 x 10^{-7} ccHe/sec @ 1 ATM delta pressure
2. Glenair 233-266-H7, 07, H2, and 02 is designed to mate to any QPL manufacturer's MIL-DTL-38999 series III plug connector having the same shell size, insert arrangement, polarization, and opposite contact gender.

Material/finish:

- Shell: 300 series CRES per part number development
- Contacts, hermetic: nickel iron alloy/gold plated
- Contacts, socket: copper alloy/gold plated
- Insulator, hermetic: fused vitreous glass/N.A.
- Insulator, socket: rigid dielectric/N.A.
- Seals: fluorosilicone/N.A

© 2022 Glenair, Inc • 1211 Air Way, Glendale, CA 91201 • 818-247-6000 • www.glenair.com • U.S. CAGE code 06324 • SuperNine® Catalog
Dimensions in Inches (millimeters) are subject to change without notice.

SuperNine® Glass seal hermetic

MIL-DTL-38999 Series III Type

233-266 Box mount with accessory thread or banding porch

233-266-H2 AND -02 BOX MOUNT RECEPTACLE

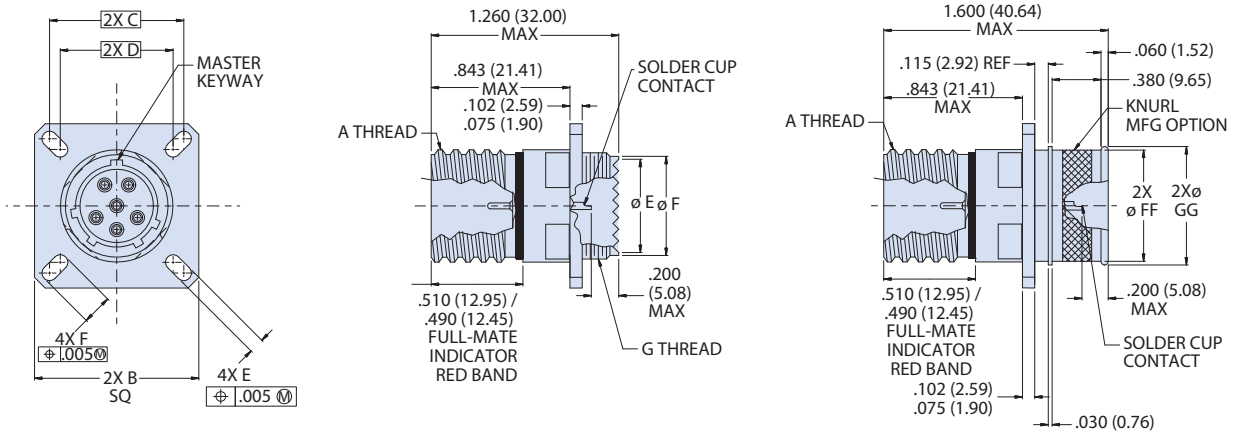

H2 - BOX MOUNT WITH ACCESSORY THREADS

02 - BOX MOUNT WITH SINGLE BAND PORCH

Dimensions															
SHELL SIZE	A THREAD	B SQ	C BSC	D BSC	E	F	G THREAD	ø FF	ø GG	ø H MIN	ø J MIN	ø K MIN	ø L HOLES	M BSC	N BSC
9	.6250-.1P-.3L-TS-2A	0.949 (24.10) 0.925 (23.50)	0.719 (18.26)	0.594 (15.09)	0.136 (3.45) 0.120 (3.05)	0.224 (5.69) 0.208 (5.28)	M12 X 1.0-6g 0.100R	0.475 (12.07)	0.538 (13.67)	0.656 (16.66)	0.516 (13.11)	0.575 (14.60)	0.133 (3.38) 0.123 (3.12)	0.719 (18.26)	0.594 (15.09)
11	.7500-.1P-.3L-TS-2A	1.043 (26.49) 1.019 (25.88)	0.812 (20.62)	0.719 (18.26)	0.136 (3.45) 0.120 (3.05)	0.202 (5.13) 0.186 (4.72)	M15 X 1.0-6g 0.100R	0.600 (15.24)	0.662 (16.81)	0.796 (20.22)	0.625 (15.88)	0.695 (17.65)	0.133 (3.38) 0.123 (3.12)	0.812 (20.62)	0.719 (18.26)
13	.8750-.1P-.3L-TS-2A	1.138 (28.91) 1.114 (28.30)	0.906 (23.01)	0.812 (20.62)	0.136 (3.45) 0.120 (3.05)	0.202 (5.13) 0.186 (4.72)	M18 X 1.0-6g 0.100R	0.700 (17.78)	0.762 (19.35)	0.922 (23.42)	0.750 (19.05)	0.795 (20.19)	0.133 (3.38) 0.123 (3.12)	0.906 (23.01)	0.812 (20.62)
15	1.0000-.1P-.3L-TS-2A	1.232 (31.29) 1.208 (30.68)	0.969 (24.61)	0.906 (23.01)	0.136 (3.45) 0.120 (3.05)	0.181 (4.60) 0.165 (4.19)	M22 X 1.0-6g 0.100R	0.835 (21.21)	0.898 (22.81)	1.047 (26.59)	0.906 (23.01)	0.930 (23.62)	0.133 (3.38) 0.123 (3.12)	0.969 (24.61)	0.906 (23.01)
17	1.1875-.1P-.3L-TS-2A	1.323 (33.60) 1.299 (32.99)	1.062 (26.97)	0.969 (24.61)	0.136 (3.45) 0.120 (3.05)	0.202 (5.13) 0.186 (4.72)	M25 X 1.0-6g 0.100R	0.960 (24.38)	1.022 (25.96)	1.219 (30.96)	1.016 (25.81)	1.050 (26.67)	0.133 (3.38) 0.123 (3.12)	1.062 (26.97)	0.969 (24.61)
19	1.2500-.1P-.3L-TS-2A	1.449 (36.80) 1.425 (36.20)	1.156 (29.36)	1.062 (26.97)	0.136 (3.45) 0.120 (3.05)	0.202 (5.13) 0.186 (4.72)	M28 X 1.0-6g 0.100R	1.062 (26.97)	1.125 (28.58)	1.297 (32.94)	1.141 (28.98)	1.155 (29.34)	0.133 (3.38) 0.123 (3.12)	1.156 (29.36)	1.062 (26.97)
21	1.3750-.1P-.3L-TS-2A	1.575 (40.00) 1.551 (39.40)	1.250 (31.75)	1.156 (29.36)	0.136 (3.45) 0.120 (3.05)	0.202 (5.13) 0.186 (4.72)	M31 X 1.0-6g 0.100R	1.188 (30.18)	1.250 (31.75)	1.422 (36.12)	1.266 (32.16)	1.280 (32.51)	0.133 (3.38) 0.123 (3.12)	1.250 (31.75)	1.156 (29.36)
23	1.5000-.1P-.3L-TS-2A	1.701 (43.21) 1.677 (42.60)	1.375 (34.92)	1.250 (31.75)	0.162 (4.11) 0.146 (3.71)	0.250 (6.35) 0.234 (5.94)	M34 X 1.0-6g 0.100R	1.275 (32.39)	1.338 (33.99)	1.547 (39.29)	1.375 (34.92)	1.375 (34.92)	0.159 (4.04) 0.149 (3.78)	1.375 (34.92)	1.250 (31.75)
25	1.6250-.1P-.3L-TS-2A	1.823 (46.30) 1.799 (45.69)	1.500 (38.10)	1.375 (34.92)	0.162 (4.11) 0.146 (3.71)	0.250 (6.35) 0.234 (5.94)	M37 X 1.0-6g 0.100R	1.475 (37.47)	1.538 (39.07)	1.672 (42.47)	1.484 (37.69)	1.570 (39.88)	0.155 (3.94) 0.145 (3.68)	1.500 (38.10)	1.375 (34.92)

© 2022 Glenair, Inc • 1211 Air Way, Glendale, CA 91201 • 818-247-6000 • www.glenair.com • U.S. CAGE code 06324 • SuperNine® Catalog
Dimensions in Inches (millimeters) are subject to change without notice.

SuperNine® Glass seal hermetic

MIL-DTL-38999 Series III Type

2333-2001 1000 PSI rated, piston sealed receptacle

Part Number Development						
Sample Part Number	**2333-2001**	**-H2**	**Z1**	**9-35**	**S**	**T**
Series / Basic Part No.	Series 23 SuperNine Hermetic					
Shell Style	**H2** = Box Mount **H5** = Solder Mount **H7** = Jam Nut **H8** = Weld Mount					
Finish*	**Z1** = SST, Passivate **ZL** = SST, Nickel Plate					
Shell Size/ Contact Arrangement*	Per MIL-DTL-38999/MIL-STD-1560					
Contact Style	**C** = Pin, PC Tail **X** = Pin, Eyelet **P** = Pin, Solder Cup **D** = Skt, PC Tail **Z** = SKT, Eyelet **S** = Skt, Solder Cup					
Minor Keyway Position	Specify **T** for normal Alternate per Table III					

***Refer to Section A for standard insert arrangements and pages D-8 thru D-10 for special shielded contact arrangements, consult factory for additional options**
Modification codes may be added directly to the end of any valid part number

Material / Finish:

- Shell & Jam-Nut - 300 Series CRES
- Contacts, Pin - Nickel-Iron Alloy / Gold Plate
- Contacts, Socket - Copper Alloy / Gold Plate
- Insulator, Pins - Vitreous Glass
- Insulator, Socket - High Grade Rigid Dielectric
- O-Rings & Seals - Pure Fluorosilicone

NOTES

- D.W.V. - Per Table V
- I.R. - 5 Gigohms min. @ 500 VDC
- Hermeticity - <1 x 10^-7 sccHe / sec @ 1 ATM delta p
- Glenair 2333-2001 series is designed to mate with 233-274 series plug having same shell size, arrangement, keying, and opposite contact gender.
- Flange gaskets are not included for the box mount. If required, select appropriate size and material from Glenair drawing 239-204.

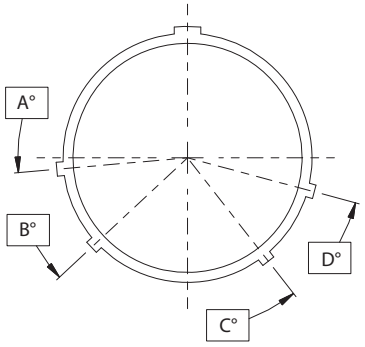

FACE VIEW - RECEPTACLE

Table III: Keyway Positions				
KEYWAY CODE	A°	B°	C°	D°
T	95	135	220	275
V	92	127	253	325
W	70	113	235	322
X	35	135	210	285
Y	54	150	239	314
Z	81	126	202	250

Table IV	
CONTACT SIZE	PC TAIL Ø L
NO 23	.020 (0.51) .018 (0.46)
NO 22	.020 (0.51) .018 (0.46)
NO 20	.030 (0.76) .028 (0.71)
NO 16	.040 (1.02) .038 (0.97)
NO 12	.072 (1.83) .070 (1.78)

Table V: DWV Voltage Levels @ Sea Level	
SERVICE RATING	VOLTAGE AC RMS 60 Hz
M	1300 VAC
I	1800 VAC
II	2300 VAC
N	1000 VAC

© 2022 Glenair, Inc • 1211 Air Way, Glendale, CA 91201 • 818-247-6000 • www.glenair.com • U.S. CAGE code 06324 • SuperNine® Catalog
Dimensions in Inches (millimeters) are subject to change without notice.

Rev. 11.25.24

SuperNine® Glass seal hermetic

MIL-DTL-38999 Series III Type

2333-2001 1000 PSI rated, piston sealed receptacle

2333-2001-H2 PISTON SEALED BOX MOUNT RECEPTACLE

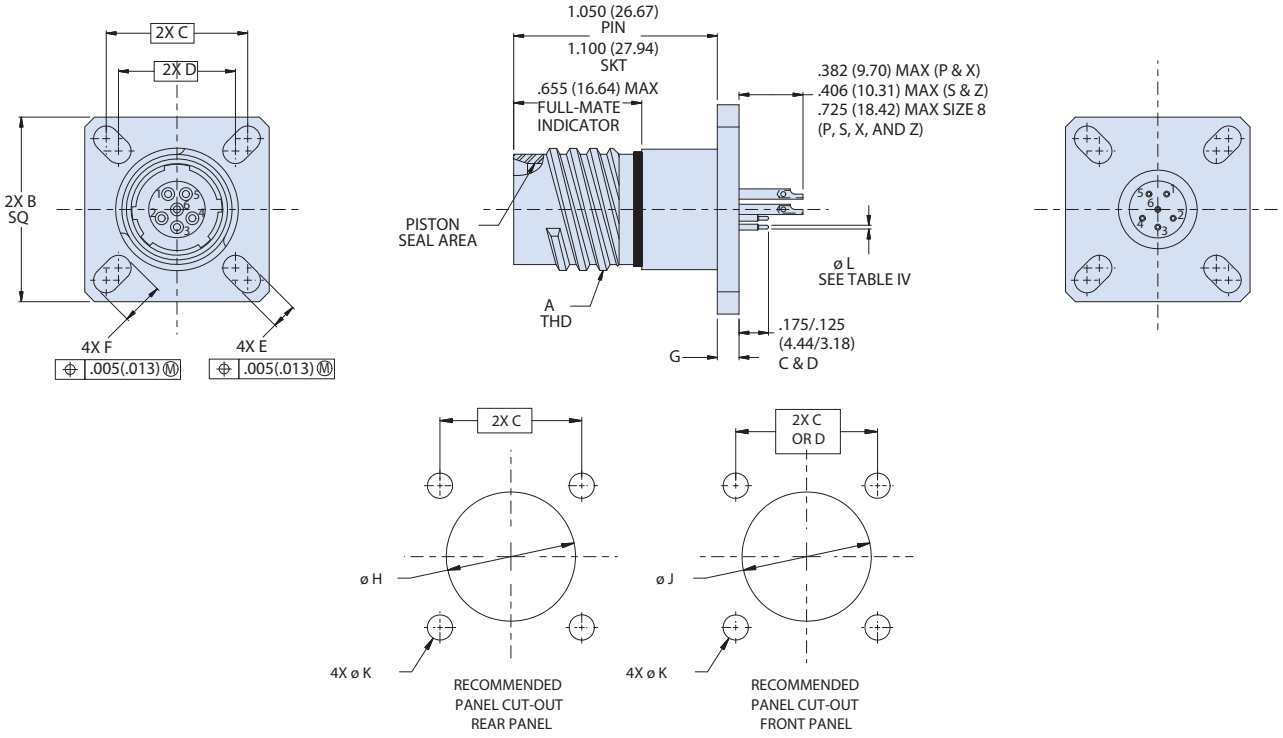

Dimensions										
SHELL SIZE	A THREAD -0.1P-0.3L-TS	B SQ FLANGE	C BASIC	D BASIC	E	F ±.008	G FLANGE	ø H MIN	Ø J MIN	ø K ±.005
9	0.625 (15.88)	0.949 (24.10) 0.925 (23.50)	0.719 (18.26)	0.594 (15.09)	.136 (3.45) .120 (3.05)	0.216 (5.49)	.132 (3.35) .083 (2.11)	0.656 (16.66)	0.516 (13.11)	.128 (3.25)
11	0.750 (19.05)	1.043 (26.49) 1.020 (25.91)	0.812 (20.62)	0.719 (18.26)		0.194 (4.93)		0.781 (19.84)	0.625 (15.88)	
13	0.875 (22.23)	1.138 (28.91) 1.114 (28.30)	0.906 (23.01)	0.812 (20.62)		0.194 (4.93)		0.921 (23.39)	0.750 (19.05)	
15	1.000 (25.40)	1.232 (31.29) 1.209 (30.71)	0.969 (24.61)	0.906 (23.01)		0.173 (4.39)		1.047 (26.59)	0.906 (23.01)	
17	1.187 (30.15)	1.323 (33.60) 1.299 (32.99)	1.062 (26.97)	0.969 (24.61)		0.194 (4.93)	.153 (3.89) .114 (2.90)	1.218 (30.94)	1.016 (25.81)	
19	1.250 (31.75)	1.449 (36.80) 1.425 (36.20)	1.156 (29.36)	1.062 (26.97)		0.194 (4.93)		1.296 (32.92)	1.142 (29.01)	
21	1.375 (34.92)	1.575 (40.00) 1.551 (39.40)	1.250 (31.75)	1.156 (29.36)		0.194 (4.93)		1.421 (36.09)	1.266 (32.16)	
23	1.500 (38.10)	1.701 (43.21) 1.677 (42.60)	1.375 (34.92)	1.250 (31.75)	.162 (4.11) .146 (3.71)	0.242 (6.15)		1.546 (39.27)	1.375 (34.92)	.154 (3.91)
25	1.625 (41.28)	1.823 (46.30) 1.799 (45.69)	1.500 (38.10)	1.375 (34.92)		0.242 (6.15)		1.672 (42.47)	1.484 (37.69)	

© 2022 Glenair, Inc • 1211 Air Way, Glendale, CA 91201 • 818-247-6000 • www.glenair.com • U.S. CAGE code 06324 • SuperNine® Catalog
Dimensions in Inches (millimeters) are subject to change without notice.

Rev. 04.21.23

SuperNine® Glass seal hermetic

MIL-DTL-38999 Series III Type

2333-2001 1000 PSI rated, piston sealed receptacle

2333-2001-H5 PISTON SEALED SOLDER MOUNT RECEPTACLE

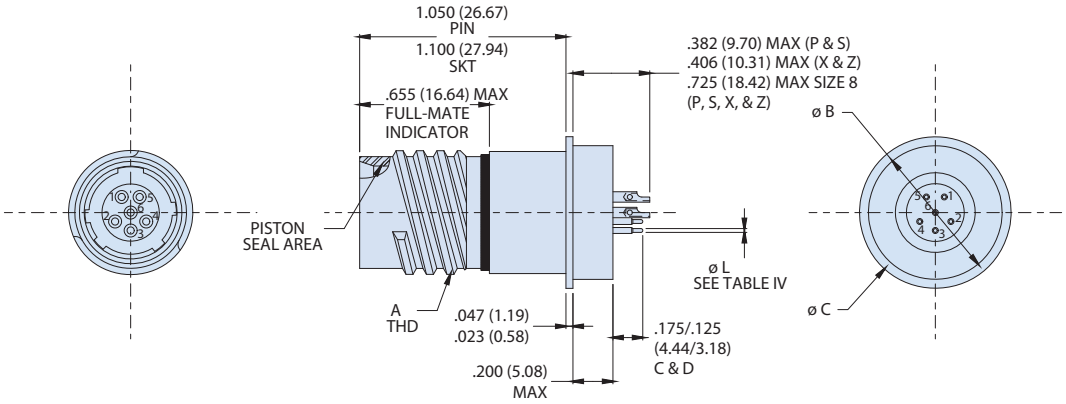

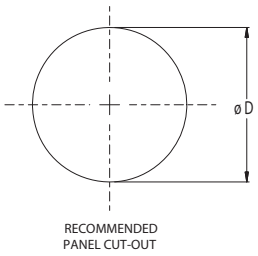

Dimensions				
SHELL SIZE	A THREAD	ø B MAX	ø C MAX	ø D
9	.6250-.1P-.3L-TS-2A	0.673 (17.09)	0.764 (19.41)	0.685 (17.40) 0.675 (17.15)
11	.7500-.1P-.3L-TS-2A	0.783 (19.89)	0.858 (21.79)	0.794 (20.17) 0.784 (19.91)
13	.8750-.1P-.3L-TS-2A	0.909 (23.09)	0.980 (24.89)	0.920 (23.37) 0.910 (23.11)
15	1.0000-.1P-.3L-TS-2A	1.031 (26.19)	1.106 (28.09)	1.043 (26.49) 1.033 (26.24)
17	1.1875-.1P-.3L-TS-2A	1.157 (29.39)	1.232 (31.29)	1.169 (29.69) 1.159 (29.44)
19	1.2500-.1P-.3L-TS-2A	1.252 (31.80)	1.323 (33.60)	1.263 (32.08) 1.253 (31.83)
21	1.3750-.1P-.3L-TS-2A	1.378 (35.00)	1.449 (36.80)	1.389 (35.28) 1.379 (35.03)
23	1.5000-.1P-.3L-TS-2A	1.504 (38.20)	1.575 (40.00)	1.515 (38.48) 1.505 (38.23)
25	1.6250-.1P-.3L-TS-2A	1.626 (41.30)	1.701 (43.21)	1.638 (41.61) 1.628 (41.35)

© 2022 Glenair, Inc • 1211 Air Way, Glendale, CA 91201 • 818-247-6000 • www.glenair.com • U.S. CAGE code 06324 • SuperNine® Catalog
Dimensions in Inches (millimeters) are subject to change without notice.

Rev. 04.21.23

SuperNine® Glass seal hermetic

MIL-DTL-38999 Series III Type

2333-2001 1000 PSI rated, piston sealed receptacle

2333-2001-H7 PISTON SEALED JAM-NUT MOUNT RECEPTACLE

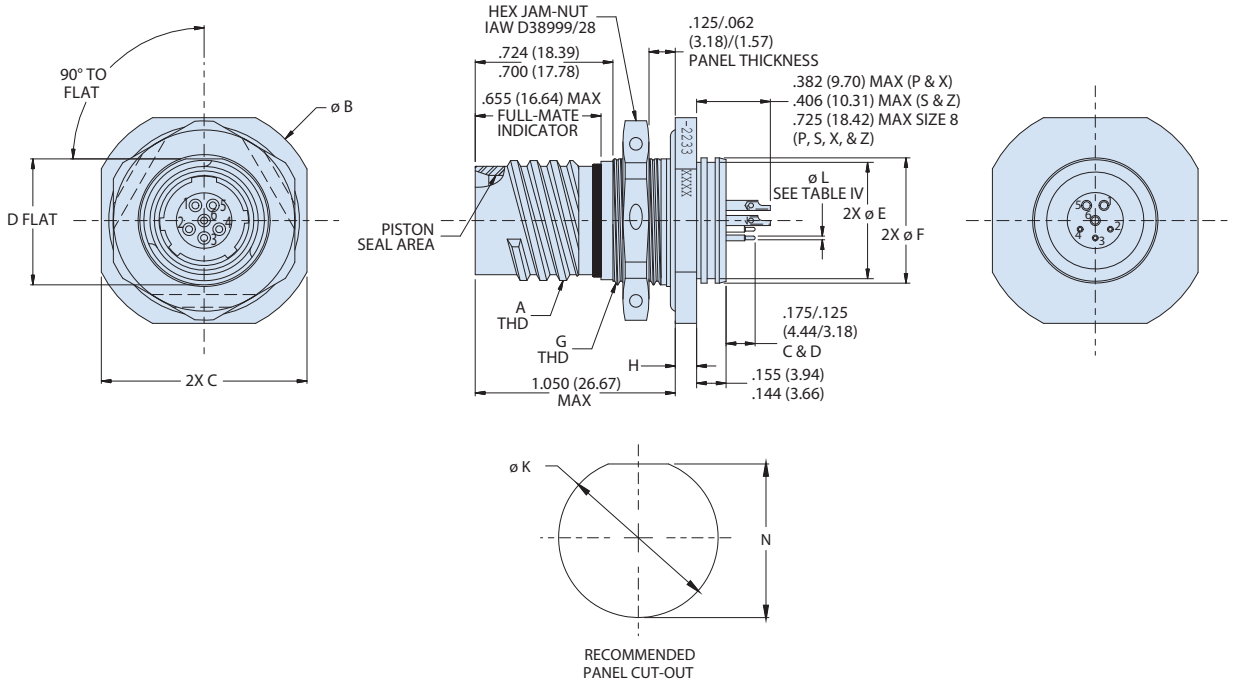

Dimensions										
SHELL SIZE	A THREAD -0.1P-0.3L-TS	ø B	C A/F ±.015	D FLAT ±.005	ø E ±.012	ø F	G THREAD ISO METRIC	H ±.008	ø K ±.005	N ±.005 (* ±.003)
9	0.625 (15.88)	1.201 (30.51) 1.177 (29.90)	1.063 (27.00)	0.650 (16.51)	0.602 (15.29)	0.653 (16.59) 0.642 (16.31)	M17 X 1.0-6g	0.106 (2.69)	0.698 (17.73)	.658*
11	0.750 (19.05)	1.386 (35.20) 1.362 (34.59)	1.252 (31.80)	0.750 (19.05)	0.724 (18.39)	0.775 (19.68) 0.764 (19.41)	M20 X 1.0-6g		0.830 (21.08)	0.766 (19.46)
13	0.875 (22.23)	1.512 (38.40) 1.488 (37.80)	1.374 (34.90)	0.937 (23.80)	0.850 (21.59)	0.905 (22.99) 0.894 (22.71)	M25 X 1.0-6g		1.015 (25.78)	0.950 (24.13)
15	1.000 (25.40)	1.638 (41.61) 1.614 (41.00)	1.500 (38.10)	1.061 (26.95)	0.976 (24.79)	1.031 (26.19) 1.020 (25.91)	M28 X 1.0-6g		1.140 (28.96)	1.080 (27.43)
17	1.187 (30.15)	1.764 (44.81) 1.740 (44.20)	1.626 (41.30)	1.186 (30.12)	1.102 (27.99)	1.153 (29.29) 1.142 (29.01)	M32 X 1.0-6g		1.265 (32.13)	1.205 (30.61)
19	1.250 (31.75)	1.949 (49.50) 1.925 (48.90)	1.811 (46.00)	1.311 (33.30)	1.228 (31.19)	1.279 (32.49) 1.268 (32.21)	M35 X 1.0-6g	0.138 (3.51)	1.390 (35.31)	1.330 (33.78)
21	1.375 (34.92)	2.075 (52.71) 2.051 (52.10)	1.937 (49.20)	1.436 (36.47)	1.350 (34.29)	1.405 (35.69) 1.394 (35.41)	M38 X 1.0-6g		1.515 (38.48)	1.455 (36.96)
23	1.500 (38.10)	2.201 (55.91) 2.177 (55.30)	2.063 (52.40)	1.561 (39.65)	1.476 (37.49)	1.531 (38.89) 1.520 (38.61)	M41 X 1.0-6g		1.640 (41.66)	1.580 (40.13)
25	1.625 (41.28)	2.323 (59.00) 2.299 (58.39)	2.189 (55.60)	1.686 (42.82)	1.602 (40.69)	1.653 (41.99) 1.642 (41.71)	M44 X 1.0-6g		1.765 (44.83)	1.705 (43.31)

© 2022 Glenair, Inc • 1211 Air Way, Glendale, CA 91201 • 818-247-6000 • www.glenair.com • U.S. CAGE code 06324 • SuperNine® Catalog
Dimensions in Inches (millimeters) are subject to change without notice.

Rev. 04.21.23

SuperNine® Glass seal hermetic

MIL-DTL-38999 Series III Type

2333-2001 1000 PSI rated, piston sealed receptacle

2333-2001-H8 PISTON SEALED WELD MOUNT RECEPTACLE

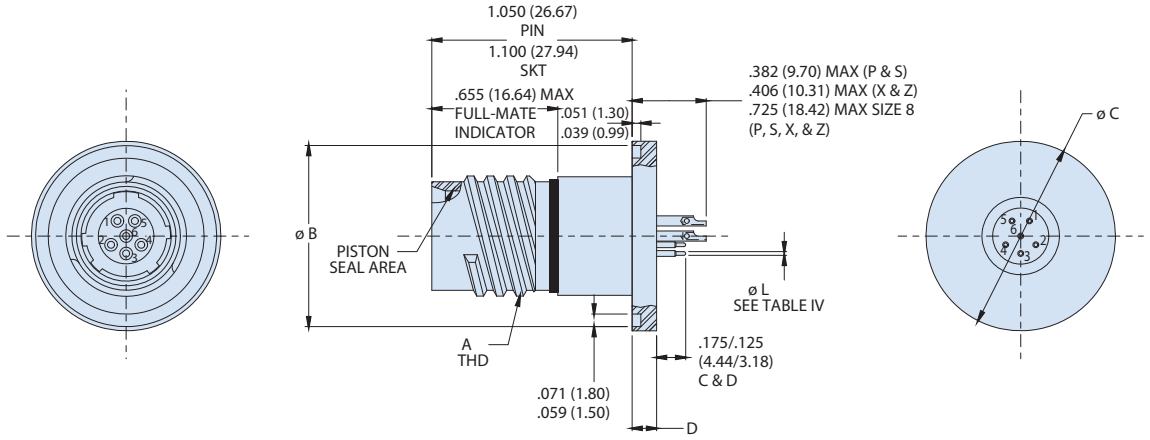

Dimensions				
SHELL SIZE	A THREAD	ø B ±.006	ø C ±.006	D
9	.6250-.1P-.3L-TS-2A	0.935 (23.75)	0.978 (24.84)	0.131 (3.33) 0.121 (3.07)
11	.7500-.1P-.3L-TS-2A	1.057 (26.85)	1.100 (27.94)	
13	.8750-.1P-.3L-TS-2A	1.183 (30.05)	1.226 (31.14)	
15	1.0000-.1P-.3L-TS-2A	1.309 (33.25)	1.352 (34.34)	
17	1.1875-.1P-.3L-TS-2A	1.396 (35.46)	1.439 (36.55)	
19	1.2500-.1P-.3L-TS-2A	1.541 (39.14)	1.585 (40.26)	
21	1.3750-.1P-.3L-TS-2A	1.683 (42.75)	1.726 (43.84)	
23	1.5000-.1P-.3L-TS-2A	1.848 (46.94)	1.892 (48.06)	.162 (4.11) .152 (3.86)
25	1.6250-.1P-.3L-TS-2A	1.935 (49.15)	1.978 (50.24)	

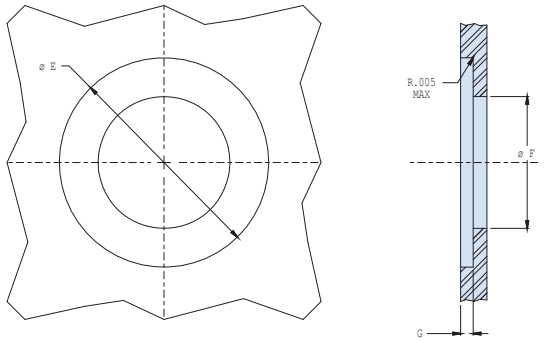

Dimensions			
SHELL SIZE	ø E	ø F MIN	DEPTH G ±.005
9	.990/.985	0.300 (7.62)	0.126 (3.20)
11	1.112/1.107	0.430 (10.92)	
13	1.238/1.233	0.550 (13.97)	
15	1.364/1.359	0.675 (17.15)	
17	1.451/1.446	0.795 (20.19)	
19	1.597/1.592	0.895 (22.73)	
21	1.738/1.733	1.010 (25.65)	
23	1.894/1.899	1.135 (28.83)	0.157 (3.99)
25	1.990/1.985	1.250 (31.75)	

© 2022 Glenair, Inc • 1211 Air Way, Glendale, CA 91201 • 818-247-6000 • www.glenair.com • U.S. CAGE code 06324 • SuperNine® Catalog
Dimensions in Inches (millimeters) are subject to change without notice.

Rev. 04.21.23

SuperNine® Glass seal hermetic

MIL-DTL-38999 Series III Type

2333-2003 Cryogenic Hermetic Recptacle

Part Number Development						
Sample Part Number	**2333-2003**	**-H2**	**ZL**	**9-35**	**P**	**N**
Series / Basic Part No.	Cryogenic Hermetic Receptacle					
Connector Style	**H2** = Box Mount Recptacle **H5** = Solder Mount Recptacle **H7** = Jam-Nut Mount Recptacle **H8** = Weld Mount Recptacle					
Material and Finish*	**ZL** = CRES, Nickel Finish **Z1** = CRES, Passivated **Z1S** = CRES, Passivated (Space Grade)					
Shell Size/ Contact Arrangement	Per MIL-DTL-38999/MIL-STD-1560					
Contact Style	**P** = Pin, Solder Cup **C** = Pin, Feedthru **X** = Pin, Eyelet **S** = Socket, Solder Cup **Z** = Socket, Eyelet **D** = Socket, Feedthru					
Polarization	**A**, **B**, **C**, **D**, **E** (**N** = Normal)					

***Refer to Section A for complete details, consult factory for additional options**
Modification codes may be added directly to the end of any valid part number

Material / Finish:

- Shell - CRES / Passivated or CRES / Nickel Plated Per QQ-N-290.
- Contacts - Nickel Iron Alloy 52 / Gold Plated
- Sockets - Copper Alloy / Gold Plated
- Insulator - Fused Vitreous Glass
  - High Grade Rigid Dielectric
- Seals - Duralectric K

Notes

- Operating Temperatures: -195°C To 200°C (-319°F To 392°F)
- Glenair 2333-2003 receptacle connector is designed to mate with any QPL manufacturer's DTL-38999 Series III plug connector having the same shell size, polarization, and arrangement except for shielded contact arrangements. Consult factory for mating plug options.

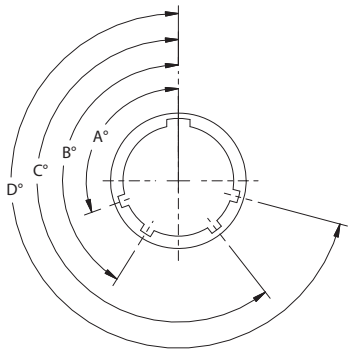

MASTER KEY & KEYWAYS
POLARIZATION

TABLE V: DWV VOLTAGE LEVELS AT SEA LEVEL	
SERVICE RATING	VOLTAGE AC RMS 60HZ
M	1300 VAC
I	1800 VAC
II	2300 VAC
N	1000 VAC

Table III: Keyway Positions					
SHELL SIZE	POS	A°	B°	C°	D°
9	N	105	140	215	265
	A	102	132	248	320
	B	80	118	230	312
	C	35	140	205	275
	D	64	155	234	304
	E	91	131	197	240
11 13 15	N	95	141	208	236
	A	113	156	182	292
	B	90	145	195	252
	C	53	156	220	255
	D	119	146	176	298
	E	51	141	184	242
17 19 21 23 25	N	80	142	196	293
	A	135	170	200	310
	B	49	169	200	244
	C	66	140	200	257
	D	62	145	180	280
	E	79	153	197	272

© 2022 Glenair, Inc • 1211 Air Way, Glendale, CA 91201 • 818-247-6000 • www.glenair.com • U.S. CAGE code 06324 • SuperNine® Catalog
Dimensions in Inches (millimeters) are subject to change without notice.

SuperNine® Glass seal hermetic

MIL-DTL-38999 Series III Type

2333-2003 Cryogenic Hermetic Recptacle

2333-2003-H2 HERMETIC BOX MOUNT RECPTACLE

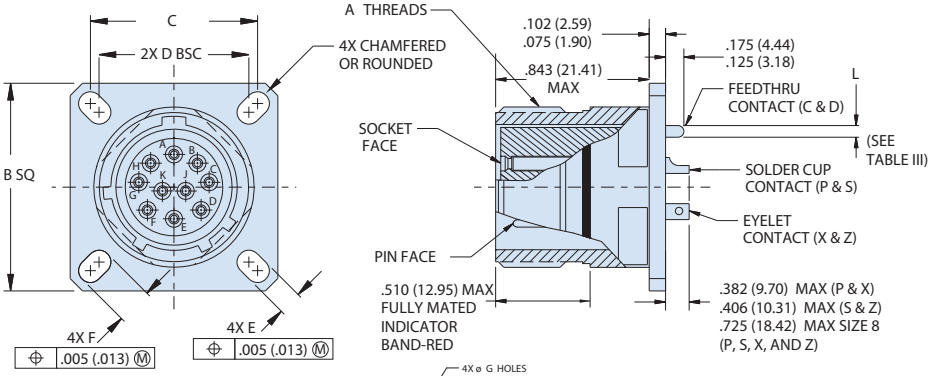

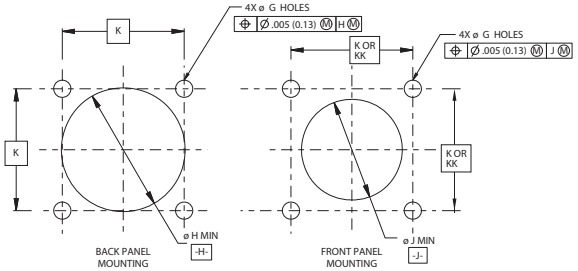

RECOMMENDED MOUNTING HOLES FOR BOX MOUNT RECEPTACLES

Table III

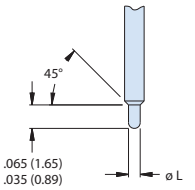

FOR #22D AND 20 CONTACTS ONLY (#20 INACTIVE FOR NEW DESIGN)

CONTACT SIZE	ø L	
22D	0.015 (0.38)	0.011 (0.28)
20	0.028 (0.71)	0.024 (0.61)
16	0.0635 (1.61)	0.0615 (1.56)
12	0.095 (2.41)	0.093 (2.36)
10	0.126 (3.20)	0.124 (3.15)
8	0.184 (4.67)	0.180 (4.57)

Dimensions

SHELL SIZE CODE	SHELL SIZE	A THREAD	B SQ		C BSC	D BSC	E		F	
A	9	.6250-.1P-.3L-TS-2A	0.949 (24.10)	0.925 (23.50)	0.719 (18.26)	0.594 (15.09)	0.136 (3.45)	0.120 (3.05)	0.224 (5.69)	0.208 (5.28)
B	11	.7500-.1P-.3L-TS-2A	1.043 (26.49)	1.019 (25.88)	0.812 (20.62)	0.719 (18.26)	0.136 (3.45)	0.120 (3.05)	0.202 (5.13)	0.186 (4.72)
C	13	.8750-.1P-.3L-TS-2A	1.138 (28.91)	1.114 (28.30)	0.906 (23.01)	0.812 (20.62)	0.136 (3.45)	0.120 (3.05)	0.202 (5.13)	0.186 (4.72)
D	15	1.0000-.1P-.3L-TS-2A	1.232 (31.29)	1.208 (30.68)	0.969 (24.61)	0.906 (23.01)	0.136 (3.45)	0.120 (3.05)	0.181 (4.60)	0.165 (4.19)
E	17	1.1875-.1P-.3L-TS-2A	1.323 (33.60)	1.299 (32.99)	1.062 (26.97)	0.969 (24.61)	0.136 (3.45)	0.120 (3.05)	0.202 (5.13)	0.186 (4.72)
F	19	1.2500-.1P-.3L-TS-2A	1.449 (36.80)	1.425 (36.20)	1.156 (29.36)	1.062 (26.97)	0.136 (3.45)	0.120 (3.05)	0.202 (5.13)	0.186 (4.72)
G	21	1.3750-.1P-.3L-TS-2A	1.575 (40.00)	1.551 (39.40)	1.250 (31.75)	1.156 (29.36)	0.136 (3.45)	0.120 (3.05)	0.202 (5.13)	0.186 (4.72)
H	23	1.5000-.1P-.3L-TS-2A	1.701 (43.21)	1.677 (42.60)	1.375 (34.92)	1.250 (31.75)	0.162 (4.11)	0.146 (3.71)	0.250 (6.35)	0.234 (5.94)
J	25	1.6250-.1P-.3L-TS-2A	1.823 (46.30)	1.799 (45.69)	1.500 (38.10)	1.375 (34.92)	0.162 (4.11)	0.146 (3.71)	0.250 (6.35)	0.234 (5.94)

Dimensions

SHELL SIZE CODE	SHELL SIZE	ø H MIN	ø J MIN	ø G HOLES	K BSC	KK BSC
A	9	0.656 (16.66)	0.516 (13.11)	0.133 (3.38) 0.123 (3.12)	0.719 (18.26)	0.594 (15.09)
B	11	0.781 (19.84)	0.625 (15.88)		0.812 (20.62)	0.719 (18.26)
C	13	0.921 (23.39)	0.750 (19.05)		0.906 (23.01)	0.812 (20.62)
D	15	1.047 (26.59)	0.906 (23.01)		0.969 (24.61)	0.906 (23.01)
E	17	1.218 (30.94)	1.016 (25.81)		1.062 (26.97)	0.969 (24.61)
F	19	1.296 (32.92)	1.142 (29.01)		1.156 (29.36)	1.062 (26.97)
G	21	1.421 (36.09)	1.266 (32.16)		1.250 (31.75)	1.156 (29.36)
H	23	1.546 (39.27)	1.375 (34.92)	0.159 (4.04) 0.149 (3.78)	1.375 (34.92)	1.250 (31.75)
J	25	1.672 (42.47)	1.484 (37.69)		1.500 (38.10)	1.375 (34.92)

© 2022 Glenair, Inc • 1211 Air Way, Glendale, CA 91201 • 818-247-6000 • www.glenair.com • U.S. CAGE code 06324 • SuperNine® Catalog
Dimensions in Inches (millimeters) are subject to change without notice.

SuperNine® Glass seal hermetic

MIL-DTL-38999 Series III Type

2333-2003 Cryogenic Hermetic Recptacle

2333-2003-H5 HERMETIC SOLDER MOUNT RECPTACLE

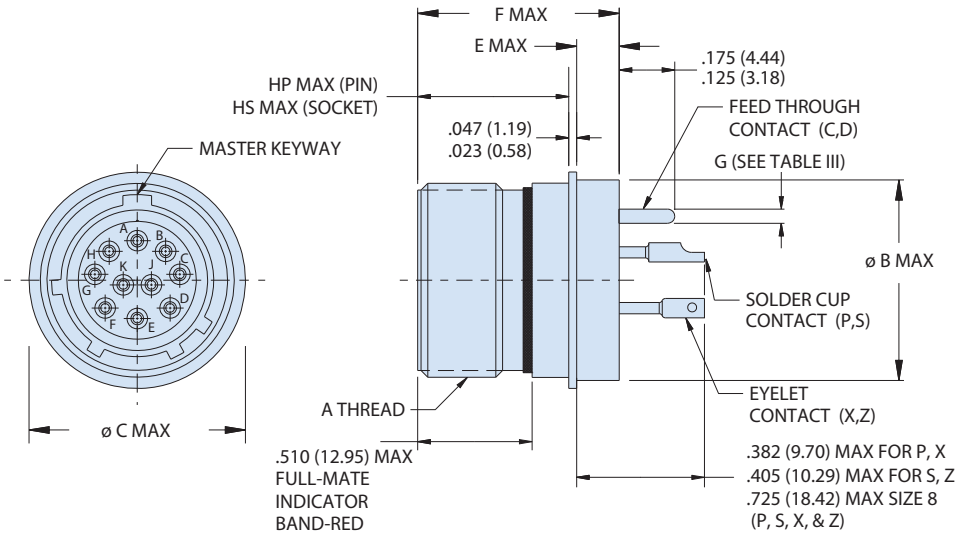

Table III

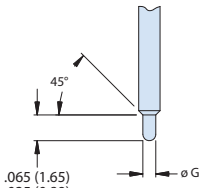

CONTACT SIZE	ø G	
22D	0.015 (0.38)	0.011 (0.28)
20	0.028 (0.71)	0.024 (0.61)
16	0.0635 (1.61)	0.0615 (1.56)
12	0.095 (2.41)	0.093 (2.36)
10	0.126 (3.20)	0.124 (3.15)
8	0.184 (4.67)	0.180 (4.57)

Dimensions

SHELL SIZE CODE	SHELL SIZE	A THREAD	ø B MAX	ø C MAX	ø D	E MAX	F MAX	HP MAX	HS MAX
A	9	.6250-.1P-.3L-TS-2A	0.673 (17.09)	0.764 (19.41)	0.685 (17.40) 0.675 (17.15)	0.201 (5.11)	0.937 (23.80)	0.677 (17.20)	0.764 (19.41)
B	11	.7500-.1P-.3L-TS-2A	0.783 (19.89)	0.858 (21.79)	0.794 (20.17) 0.784 (19.91)				
C	13	.8750-.1P-.3L-TS-2A	0.909 (23.09)	0.980 (24.89)	0.920 (23.37) 0.910 (23.11)				
D	15	1.0000-.1P-.3L-TS-2A	1.031 (26.19)	1.106 (28.09)	1.043 (26.49) 1.033 (26.24)				
E	17	1.1875-.1P-.3L-TS-2A	1.157 (29.39)	1.232 (31.29)	1.169 (29.69) 1.159 (29.44)				
F	19	1.2500-.1P-.3L-TS-2A	1.252 (31.80)	1.323 (33.60)	1.263 (32.08) 1.253 (31.83)				
G	21	1.3750-.1P-.3L-TS-2A	1.378 (35.00)	1.449 (36.80)	1.389 (35.28) 1.379 (35.03)				
H	23	1.5000-.1P-.3L-TS-2A	1.504 (38.20)	1.575 (40.00)	1.515 (38.48) 1.505 (38.23)	0.232 (5.89)	0.969 (24.61)		
J	25	1.6250-.1P-.3L-TS-2A	1.626 (41.30)	1.701 (43.21)	1.638 (41.61) 1.628 (41.35)				

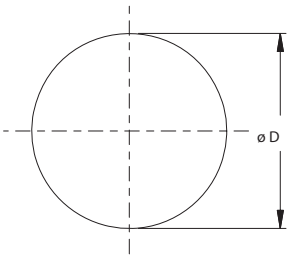

RECOMMENDED PANEL
CUT-OUT

© 2022 Glenair, Inc • 1211 Air Way, Glendale, CA 91201 • 818-247-6000 • www.glenair.com • U.S. CAGE code 06324 • SuperNine® Catalog
Dimensions in Inches (millimeters) are subject to change without notice.

SuperNine® Glass seal hermetic

MIL-DTL-38999 Series III Type

2333-2003 Cryogenic Hermetic Recptacle

2333-2003-H7 HERMETIC JAM-NUT MOUNT RECPTACLE

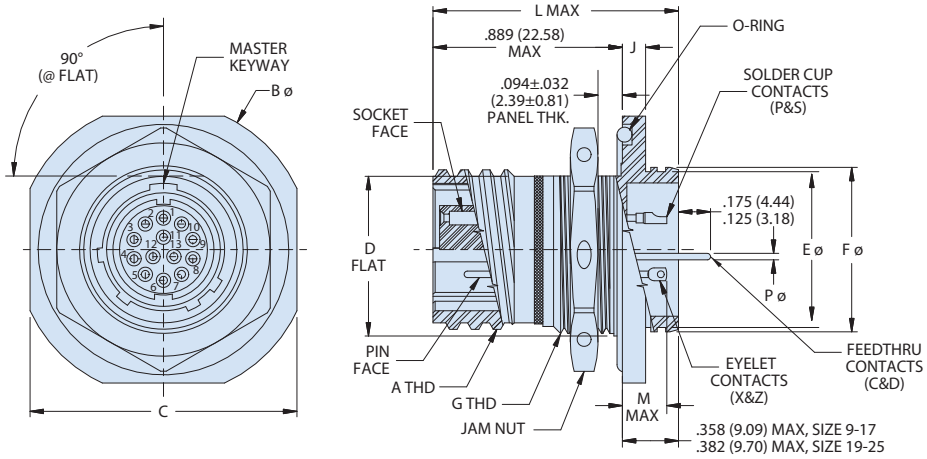

Table III

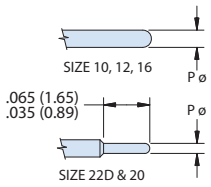

CONTACT SIZE	P ø	
22D	0.015 (0.38)	0.011 (0.28)
20	0.028 (0.71)	0.024 (0.61)
16	0.0635 (1.61)	0.0615 (1.56)
12	0.095 (2.41)	0.093 (2.36)
10	0.126 (3.20)	0.124 (3.15)
8	0.184 (4.67)	0.180 (4.57)

Dimensions

SHELL SIZE CODE	SHELL SIZE	A THREAD -0.1P-0.3L-TS	ø B	C A/F ±.015	D FLAT ±.005	ø E ±.012	ø F	G THREAD ISO METRIC	J ±.008	ø K ±.005	L MAX	M MAX P&X	M MAX S&Z	M MAX #8 (ALL)	N ±.005 (* ±.003)
A	9	0.625 (15.88)	1.201 (30.51) 1.177 (29.90)	1.063 (27.00)	0.650 (16.51)	0.602 (15.29)	0.653 (16.59) 0.642 (16.31)	M17 X 1.0-6g	0.106 (2.69)	0.698 (17.73)	1.150 (29.21)	0.209 (5.31)	0.232 (5.89)	0.595 (15.11)	.658*
B	11	0.750 (19.05)	1.386 (35.20) 1.362 (34.59)	1.252 (31.80)	0.750 (19.05)	0.724 (18.39)	0.775 (19.68) 0.764 (19.41)	M20 X 1.0-6g	0.106 (2.69)	0.830 (21.08)	1.150 (29.21)	0.209 (5.31)	0.232 (5.89)	0.595 (15.11)	0.766 (19.46)
C	13	0.875 (22.23)	1.512 (38.40) 1.488 (37.80)	1.374 (34.90)	0.937 (23.80)	0.850 (21.59)	0.905 (22.99) 0.894 (22.71)	M25 X 1.0-6g	0.106 (2.69)	1.015 (25.78)	1.154 (29.31)	0.201 (5.11)	0.224 (5.69)	0.590 (14.99)	0.950 (24.13)
D	15	1.000 (25.40)	1.638 (41.61) 1.614 (41.00)	1.500 (38.10)	1.061 (26.95)	0.976 (24.79)	1.031 (26.19) 1.020 (25.91)	M28 X 1.0-6g	0.106 (2.69)	1.140 (28.96)	1.154 (29.31)	0.201 (5.11)	0.224 (5.69)	0.590 (14.99)	1.080 (27.43)
E	17	1.187 (30.15)	1.764 (44.81) 1.740 (44.20)	1.626 (41.30)	1.186 (30.12)	1.102 (27.99)	1.153 (29.29) 1.142 (29.01)	M32 X 1.0-6g	0.106 (2.69)	1.265 (32.13)	1.154 (29.31)	0.201 (5.11)	0.224 (5.69)	0.590 (14.99)	1.205 (30.61)
F	19	1.250 (31.75)	1.949 (49.50) 1.925 (48.90)	1.811 (46.00)	1.311 (33.30)	1.228 (31.19)	1.279 (32.49) 1.268 (32.21)	M35 X 1.0-6g	0.138 (3.51)	1.390 (35.31)	1.185 (30.10)	0.201 (5.11)	0.224 (5.69)	0.590 (14.99)	1.330 (33.78)
G	21	1.375 (34.92)	2.075 (52.71) 2.051 (52.10)	1.937 (49.20)	1.436 (36.47)	1.350 (34.29)	1.405 (35.69) 1.394 (35.41)	M38 X 1.0-6g	0.138 (3.51)	1.515 (38.48)	1.185 (30.10)	0.201 (5.11)	0.224 (5.69)	0.590 (14.99)	1.455 (36.96)
H	23	1.500 (38.10)	2.201 (55.91) 2.177 (55.30)	2.063 (52.40)	1.561 (39.65)	1.476 (37.49)	1.531 (38.89) 1.520 (38.61)	M41 X 1.0-6g	0.138 (3.51)	1.640 (41.66)	1.185 (30.10)	0.201 (5.11)	0.224 (5.69)	0.590 (14.99)	1.580 (40.13)
J	25	1.625 (41.28)	2.323 (59.00) 2.299 (58.39)	2.189 (55.60)	1.686 (42.82)	1.602 (40.69)	1.653 (41.99) 1.642 (41.71)	M44 X 1.0-6g	0.138 (3.51)	1.765 (44.83)	1.185 (30.10)	0.201 (5.11)	0.224 (5.69)	0.590 (14.99)	1.705 (43.31)

SOLDER CUPS (P, S)

CONTACT SIZE	WIRE GAUGE ACCOMODATION
22D	#22 - #28
20	#20 - #24
16	#16 - #20
12	#12 - #14
10	#10 - #12

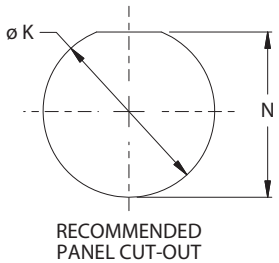

© 2022 Glenair, Inc • 1211 Air Way, Glendale, CA 91201 • 818-247-6000 • www.glenair.com • U.S. CAGE code 06324 • SuperNine® Catalog

Dimensions in Inches (millimeters) are subject to change without notice.

SuperNine® Glass seal hermetic

MIL-DTL-38999 Series III Type

2333-2003 Cryogenic Hermetic Recptacle

2333-2003-H8 HERMETIC WELD MOUNT RECPTACLE

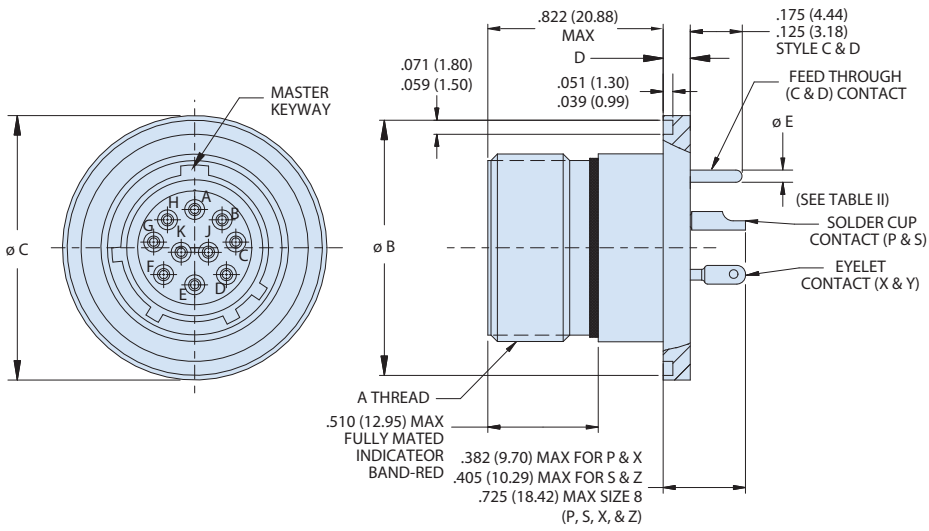

Table III

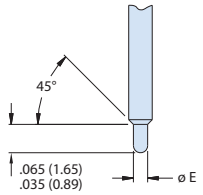

FOR #22D AND 20 CONTACTS ONLY
(#20 INACTIVE FOR NEW DESIGN)

CONTACT SIZE	ø E	
22D	0.015 (0.38)	0.011 (0.28)
20	0.028 (0.71)	0.024 (0.61)
16	0.0635 (1.61)	0.0615 (1.56)
12	0.095 (2.41)	0.093 (2.36)
10	0.126 (3.20)	0.124 (3.15)
8	0.184 (4.67)	0.180 (4.57)

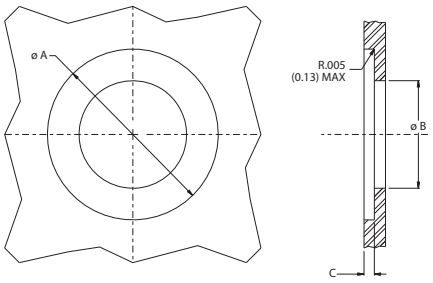

Recommended Panel Cutout

SHELL SIZE	ø A	ø B MIN	DEPTH C ±.005
9	.990/.985 (25.15/25.02)	0.300 (7.62)	0.126 (3.20)
11	1.112/1.107 (28.24/28.12)	0.430 (10.92)	0.126 (3.20)
13	1.238/1.233 (31.45/28.12)	0.550 (13.97)	0.126 (3.20)
15	1.364/1.359 (34.65/34.52)	0.675 (17.15)	0.126 (3.20)
17	1.451/1.446 (36.86/36.73)	0.795 (20.19)	0.126 (3.20)
19	1.597/1.592 (40.56/40.44)	0.895 (22.73)	0.126 (3.20)
21	1.738/1.733 (44.15/44.02)	1.010 (25.65)	0.126 (3.20)
23	1.894/1.899 (48.11/48.23)	1.135 (28.83)	0.157 (3.99)
25	1.990/1.985 (50.55/50.42)	1.250 (31.75)	0.157 (3.99)

Dimensions

SHELL SIZE CODE	SHELL SIZE	A THREAD	ø B	ø C	D
A	9	.6250-.1P-.3L-TS-2A	0.941 (23.90) 0.929 (23.60)	0.984 (24.99) 0.972 (24.69)	0.134 (3.40) 0.118 (3.00)
B	11	.7500-.1P-.3L-TS-2A	1.063 (27.00) 1.051 (26.70)	1.106 (28.09) 1.094 (27.79)	0.134 (3.40) 0.118 (3.00)
C	13	.8750-.1P-.3L-TS-2A	1.189 (30.20) 1.177 (29.90)	1.232 (31.29) 1.220 (30.99)	0.134 (3.40) 0.118 (3.00)
D	15	1.0000-.1P-.3L-TS-2A	1.315 (33.40) 1.303 (33.10)	1.358 (34.49) 1.346 (34.19)	0.134 (3.40) 0.118 (3.00)
E	17	1.1875-.1P-.3L-TS-2A	1.402 (35.61) 1.390 (35.31)	1.445 (36.70) 1.433 (36.40)	0.134 (3.40) 0.118 (3.00)
F	19	1.2500-.1P-.3L-TS-2A	1.547 (39.29) 1.535 (38.99)	1.591 (40.41) 1.579 (40.11)	0.134 (3.40) 0.118 (3.00)
G	21	1.3750-.1P-.3L-TS-2A	1.689 (42.90) 1.677 (42.60)	1.732 (43.99) 1.720 (43.69)	0.134 (3.40) 0.118 (3.00)
H	23	1.5000-.1P-.3L-TS-2A	1.854 (47.09) 1.842 (46.79)	1.898 (48.21) 1.886 (47.90)	0.165 (4.19) 0.149 (3.78)
J	25	1.6250-.1P-.3L-TS-2A	1.941 (49.30) 1.929 (49.00)	1.984 (50.39) 1.972 (50.09)	0.165 (4.19) 0.149 (3.78)

© 2022 Glenair, Inc • 1211 Air Way, Glendale, CA 91201 • 818-247-6000 • www.glenair.com • U.S. CAGE code 06324 • SuperNine® Catalog
Dimensions in Inches (millimeters) are subject to change without notice.

Signature Series Hermetic Connectors

2333-2010 Cryogenic Hermetic Feedthrough

Part Number Development							
Sample Part Number	**2333-2010**	**-H7**	**Z1**	**19-35**	**S**	**N**	**-01**
Series / Basic Part No.	Series 23 SuperNine Cryogenic Hermetic Feed-thru						
Connector Style	**H2** = Box Mount **H7** = Jam-Nut Mount **DH7** = Dual O-ring Jam-Nut Mount **H8** = Weld Mount						
Finish*	**Z1** = 300 Series SST / Passivate **ZL** = 300 Series SST / Nickel Plate						
Shell Size-Insert Arrangement*	Per MIL-DTL-38999/MIL-STD-1560						
Contact Type	**P** = Pin on Jam-Nut Side **S** = Socket on Jam-Nut Side **PP** = Pin-Pin (See note 1) **SS** = Socket-Socket (See note 1)						
Polarization*	**A**, **B**, **C**, **D**, **E**, **N** = Normal, **U** = Universal						
Panel Thickness	**01**, **02**, **03**; See panel thickness table per connector style.						

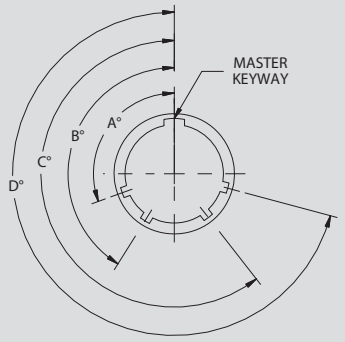

Minor Keyway Position					
Shell Sizes	**POS**	**A°**	**B°**	**C°**	**D°**
9	N	105	140	215	265
	A	102	132	248	320
	B	80	118	230	312
	C	35	140	205	275
	D	64	155	234	304
	E	91	131	197	240
11 13 15	N	95	141	208	236
	A	113	156	182	292
	B	90	145	195	252
	C	53	156	220	255
	D	119	146	176	298
	E	51	141	184	242
17 19 21 23 25	N	80	142	196	293
	A	135	170	200	310
	B	49	169	200	244
	C	66	140	200	257
	D	62	145	180	280
	E	79	153	197	272

NOTES

1. Test requirements:
   - D.W.V. - Per DWV Voltage Levels table
   - I.R. - 5 Gigohms min. @ 500 Vdc
   - Hermeticity - <1 x 10^{-7} ccHe/sec at delta 1 atmosphere
2. Modified major ø31.95/31.80 mm, applies only to mounting types -H7 and DH7 for shell size 17.
3. Glenair 2333-2010 receptacle connector is designed to mate with any QPL MFR'S MIL-DTL-38999 Series III plug having the same shell size, contact arrangement, polarization, & opposite contact gender, except for shielded contact arrangements consult factory for mating plug options.
4. Glenair 2333-2010 operating temperature is -195° to 200° C (-319° to 392°F).

Material / Finish

- Shell and jam-nut: CRES/passivate or CRES/nickel plate
- Contacts pin: nickel-iron alloy/gold plate
- Contacts sockets: copper alloy/gold plate
- Hoods, Sockets - CRES / Passivate
- Insulator hermetic: vitreous glass
- Insulator socket: rigid dielectric
- Seals: Duralectric K

DWV Voltage Levels At Sea Level	
SERVICE RATING	**VOLTAGE AC RMS 60HZ**
M	1300 VAC
I	1800 VAC
II	2300 VAC
N	1000 VAC

UNIVERSAL POLARIZATION CONFIGURATION

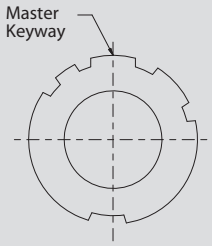

Universal Polarization
Size 9 Keyway
Receptacle

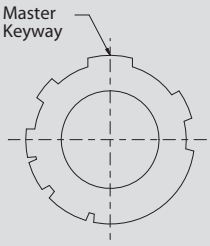

Universal Polarization
Size 11, 13, 15 Keyway
Receptacle

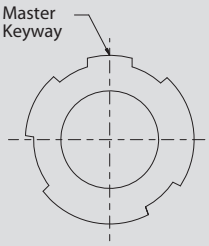

Universal Polarization
Size 17 Thru 25 Keyway
Receptacle

SUPERNINE 38999 SERIES III TYPE

© 2025 Glenair, Inc • 1211 Air Way, Glendale, CA 91201 • 818-247-6000 • www.glenair.com • U.S. CAGE code 06324 • Hermetic Catalog
Dimensions in Inches (millimeters) unless noted otherwise and are subject to change without notice.

2333-2010 Cryogenic Hermetic Feedthrough

2333-2010-H2 BOX MOUNT FEEDTHROUGH

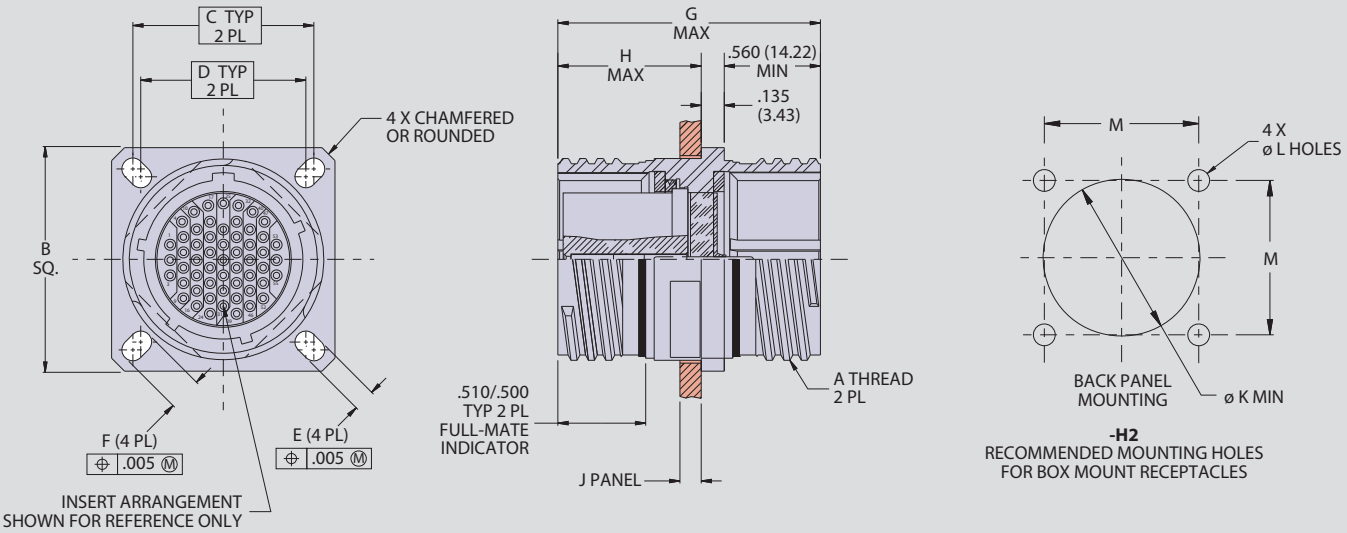

-H2
RECOMMENDED MOUNTING HOLES
FOR BOX MOUNT RECEPTACLES

Dimensions						
SHELL SIZE	A THREAD	B SQ.	C BSC.	D BSC.	E	F
9	.6250 .1 P-.3L-TS-2A	0.949 (24.10) 0.925 (23.50)	0.719 (18.26)	0.594 (15.09)	0.136 (3.45) 0.120 (3.05)	0.224 (5.69) 0.208 (5.28)
11	.7500 .1 P-.3L-TS-2A	1.043 (26.49) 1.019 (25.88)	0.812 (20.62)	0.719 (18.26)	0.136 (3.45) 0.120 (3.05)	0.202 (5.13) 0.186 (4.72)
13	.8750 .1 P-.3L-TS-2A	1.138 (28.91) 1.114 (28.30)	0.906 (23.01)	0.812 (20.62)	0.136 (3.45) 0.120 (3.05)	0.202 (5.13) 0.186 (4.72)
15	1.0000 .1 P-.3L-TS-2A	1.232 (31.29) 1.208 (30.68)	0.969 (24.61)	0.906 (23.01)	0.136 (3.45) 0.120 (3.05)	0.181 (4.60) 0.165 (4.19)
17	1.1875 .1 P-.3L-TS-2A	1.323 (33.60) 1.299 (32.99)	1.062 (26.97)	0.969 (24.61)	0.136 (3.45) 0.120 (3.05)	0.202 (5.13) 0.186 (4.72)
19	1.2500 .1 P-.3L-TS-2A	1.449 (36.80) 1.425 (36.20)	1.156 (29.36)	1.062 (26.97)	0.136 (3.45) 0.120 (3.05)	0.202 (5.13) 0.186 (4.72)
21	1.3750 .1 P-.3L-TS-2A	1.575 (40.00) 1.551 (39.40)	1.250 (31.75)	1.156 (29.36)	0.136 (3.45) 0.120 (3.05)	0.202 (5.13) 0.186 (4.72)
23	1.5000 .1 P-.3L-TS-2A	1.701 (43.21) 1.677 (42.60)	1.375 (34.92)	1.25 (31.75)	0.162 (4.11) 0.146 (3.71)	0.250 (6.35) 0.234 (5.94)
25	1.6250 .1 P-.3L-TS-2A	1.823 (46.30) 1.799 (45.69)	1.500 (38.10)	1.375 (34.92)	0.162 (4.11) 0.146 (3.71)	0.250 (6.35) 0.234 (5.94)

Recommended Mounting Holes			
SHELL SIZE	Ø K MIN	Ø L HOLES	M
9	0.656 (16.66)	0.133 (3.38) 0.123 (3.12)	0.724 (18.39) 0.714 (18.14)
11	0.781 (19.84)	0.133 (3.38) 0.123 (3.12)	0.817 (20.75) 0.807 (20.50)
13	0.921 (23.39)	0.133 (3.38) 0.123 (3.12)	0.911 (23.14) 0.901 (22.89)
15	1.047 (26.59)	0.133 (3.38) 0.123 (3.12)	0.973 (24.71) 0.963 (24.46)
17	1.218 (30.94)	0.133 (3.38) 0.123 (3.12)	1.067 (27.10) 1.057 (26.85)
19	1.296 (32.92)	0.133 (3.38) 0.123 (3.12)	1.161 (29.49) 1.151 (29.24)
21	1.421 (36.09)	0.133 (3.38) 0.123 (3.12)	1.255 (31.88) 1.245 (31.62)
23	1.546 (39.27)	0.159 (4.04) 0.149 (3.78)	1.380 (35.05) 1.370 (34.80)
25	1.672 (42.47)	0.159 (4.04) 0.149 (3.78)	1.505 (38.23) 1.495 (37.97)

Box Mount (H2) Panel Thickness			
DASH NO.	G DIM, OAL MAX	H DIM, MAX	J DIM, PANEL
-01	1.600 (40.64)	.843 (21.41)	.125 (3.18) .062 (1.57)
-02	1.730 (43.94)	1.040 (26.42)	.250 (6.35) .062 (1.57)
-03	2.000 (50.80)	1.290 (32.77)	.500 (12.70) .062 (1.57)

© 2025 Glenair, Inc • 1211 Air Way, Glendale, CA 91201 • 818-247-6000 • www.glenair.com • U.S. CAGE code 06324 • Hermetic Catalog
Dimensions in Inches (millimeters) unless noted otherwise and are subject to change without notice.

Signature Series Hermetic Connectors

2333-2010 Cryogenic Hermetic Feedthrough

2333-2010-H7 JAM-NUT MOUNT FEEDTHROUGH
2333-2010-DH7 JAM-NUT MOUNT DUAL O-RING FEEDTHROUGH

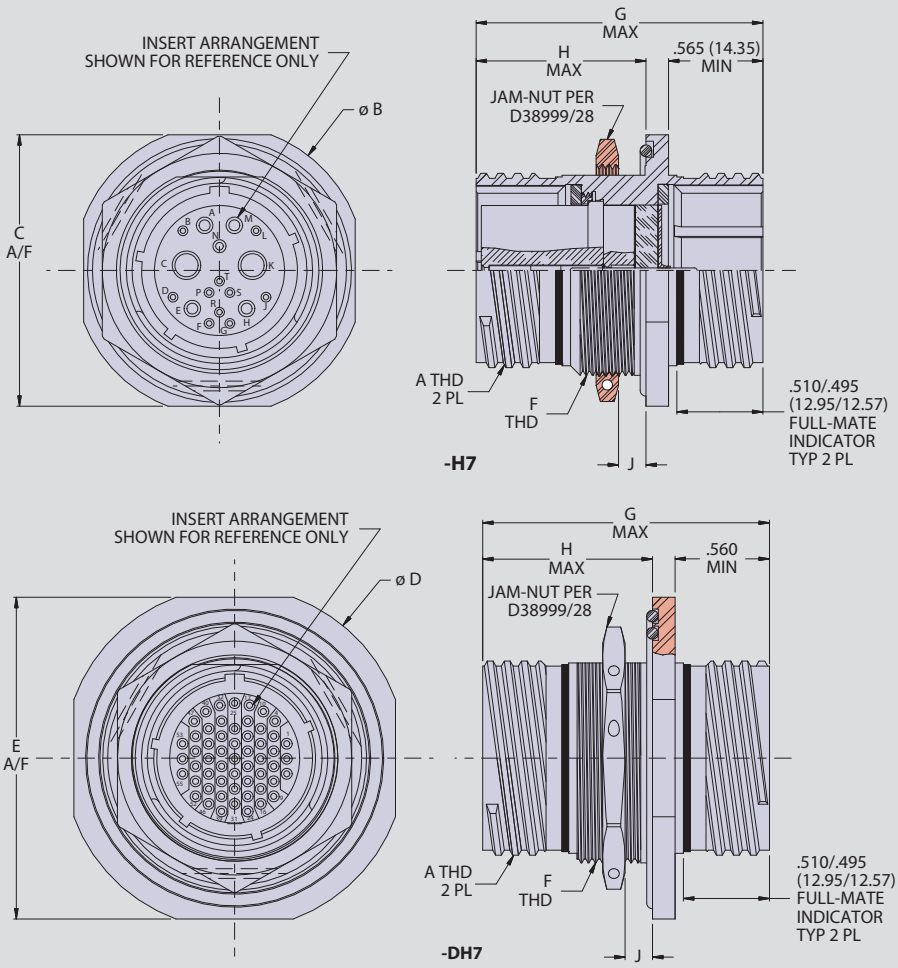

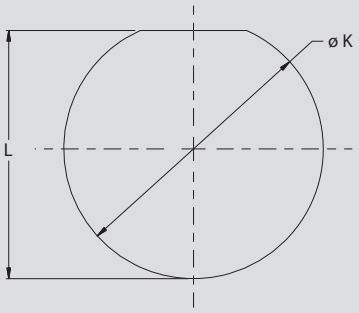

Recommended Panel Cut-Out for -H7 and DH7		
SHELL SIZE	K DIA	L DIM
9	.703/.693 (17.86/17.60)	.661/.655 (16.79/16.64)
11	.835/.825 (21.21/20.96)	.771/.761 (19.58/19.33)
13	1.020/1.010 (25.91/25.65)	.955/.945 (24.26/24.00)
15	1.145/1.135 (29.08/28.83)	1.085/1.075 (27.56/27.30)
17	1.270/1.260 (32.26/32.00)	1.210/1.200 (30.73/30.48)
19	1.395/1.385 (35.43/35.18)	1.335/1.325 (33.91/33.65)
21	1.520/1.510 (38.61/38.35)	1.460/1.450 (37.08/36.83)
23	1.645/1.635 (41.78/41.53)	1.585/1.575 (40.26/40.00)
25	1.770/1.760 (44.96/44.70)	1.710/1.700 (43.43/43.18)

Dimensions						
SHELL SIZE	A THREAD	Ø B	C	Ø D MAX	E MAX	F THREAD METRIC
9	.6250 0.1P-0.3L-TS-2A	1.189 (30.20)	1.063 (27.00)	1.500 (38.10)	1.375 (34.92)	M17 X 1.0–6G
11	.7500 0.1P-0.3L-TS-2A	1.375 (34.92)	1.252 (31.80)	1.625 (41.28)	1.500 (38.10)	M20 X 1.0–6G
13	.8750 0.1P-0.3L-TS-2A	1.500 (38.10)	1.374 (34.90)	1.752 (44.50)	1.626 (41.30)	M25 X 1.0–6G
15	1.0000 0.1P-0.3L-TS-2A	1.626 (41.30)	1.500 (38.10)	1.937 (49.20)	1.811 (46.00)	M28 X 1.0–6G
17	1.1875 0.1P-0.3L-TS-2A	1.752 (44.50)	1.626 (41.30)	2.063 (52.40)	1.937 (49.20)	M32 X 1.0–6G
19	1.2500 0.1P-0.3L-TS-2A	1.937 (49.20)	1.811 (46.00)	2.189 (55.60)	2.063 (52.40)	M35 X 1.0–6G
21	1.3750 0.1P-0.3L-TS-2A	2.063 (52.40)	1.937 (49.20)	2.311 (58.70)	2.189 (55.60)	M38 X 1.0–6G
23	1.5000 0.1P-0.3L-TS-2A	2.189 (55.60)	2.063 (52.40)	2.500 (63.50)	2.300 (58.42)	M41 X 1.0–6G
25	1.6250 0.1P-0.3L-TS-2A	2.311 (58.70)	2.189 (55.60)	2.625 (66.68)	2.400 (60.96)	M44 X 1.0–6G

Jam-Nut Mount Panel Thickness			
DASH NO.	G DIM, OAL MAX	H DIM, MAX	J DIM, PANEL
-01	1.670 (42.42) Max	.980 (24.89)	.125/.062 (3.18/1.57)
-02	1.780 (45.21) Max	1.090 (27.69)	.250/.062 (6.35/1.57)
-03	2.030 (51.56) Max	1.340 (34.04)	.500/.062 (12.70/1.57)

SUPERNINE 38999 SERIES III TYPE

© 2025 Glenair, Inc • 1211 Air Way, Glendale, CA 91201 • 818-247-6000 • www.glenair.com • U.S. CAGE code 06324 • Hermetic Catalog
Dimensions in Inches (millimeters) unless noted otherwise and are subject to change without notice.

2333-2010 Cryogenic Hermetic Feedthrough

2333-2010-H8 WELD MOUNT FEEDTHROUGH

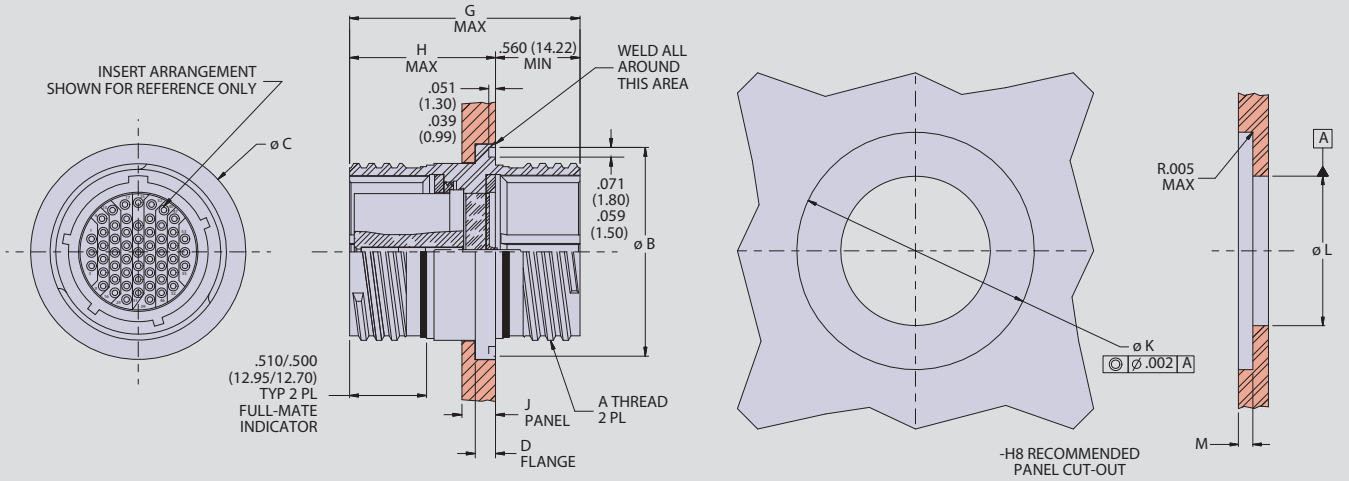

Dimensions				
Shell Size	A Thread	Ø B	Ø C	D
9	.6250-.1P-.3L-TS-2A	.941 (23.90) .929 (23.60)	.984 (24.99) .972 (24.69)	.134 (3.40) .118 (3.00)
11	.7500-.1P-.3L-TS-2A	1.063 (27.00) 1.051 (26.70)	1.106 (28.09) 1.094 (27.79)	.134 (3.40) .118 (3.00)
13	.8750-.1P-.3L-TS-2A	1.189 (30.20) 1.177 (29.90)	1.232 (31.29) 1.220 (30.99)	.134 (3.40) .118 (3.00)
15	1.0000-.1P-.3L-TS-2A	1.315 (33.40) 1.303 (33.10)	1.358 (34.49) 1.346 (34.19)	.134 (3.40) .118 (3.00)
17	1.1875-.1P-.3L-TS-2A	1.402 (35.61) 1.390 (35.31)	1.445 (36.70) 1.433 (36.40)	.134 (3.40) .118 (3.00)
19	1.2500-.1P-.3L-TS-2A	1.547 (39.29) 1.535 (38.99)	1.591 (40.41) 1.579 (40.11)	.134 (3.40) .118 (3.00)
21	1.3750-.1P-.3L-TS-2A	1.689 (42.90) 1.677 (42.60)	1.732 (43.99) 1.720 (43.69)	.134 (3.40) .118 (3.00)
23	1.5000-.1P-.3L-TS-2A	1.854 (47.09) 1.842 (46.79)	1.898 (48.21) 1.886 (47.90)	.165 (4.19) .149 (3.78)
25	1.6250-.1P-.3L-TS-2A	1.941 (49.30) 1.929 (49.00)	1.984 (50.39) 1.972 (50.09)	.165 (4.19) .149 (3.78)

Recommended Panel Cutout			
Shell Size	Ø K	Ø L ±.005 (0.13)	Depth M ±.005 (0.13)
9	.990/.985 (25.15/ 25.02)	.635 (16.13)	.126 (3.20)
11	1.112/1.107 (28.24/ 28.12)	.760 (19.30)	.126 (3.20)
13	1.238/1.233 (31.45/ 31.32)	.885 (22.48)	.126 (3.20)
15	1.364/1.359 (34.65/34.52)	1.010 (25.65)	.126 (3.20)
17	1.451/1.446 (36.86/ 36.73)	1.195 (3.35)	.126 (3.20)
19	1.597/1.592 (40.56/ 40.44)	1.260 (32.00)	.126 (3.20)
21	1.738/1.733 (44.15/ 44.02)	1.385 (35.18)	.126 (3.20)
23	1.894/1.899 (48.11/ 48.23)	1.510 (38.35)	.157 (3.99)
25	1.990/1.985 (50.55/ 50.42)	1.635 (41.53)	.157 (3.99)

Weld Mount (H8) Panel Thickness			
Dash no	E Dim, OAL Max	F Dim, Max	G Dim, Panel
-01	1.630 (41.40)	1.060 (26.92)	.250 (6.35) .175 (4.44)
-02	1.750 (44.45)	1.180 (29.97)	4.25 (107.95) .175 (4.44)
-03	1.920 (48.77)	1.350 (34.29)	.600 (15.24) .175 (4.44)

© 2025 Glenair, Inc • 1211 Air Way, Glendale, CA 91201 • 818-247-6000 • www.glenair.com • U.S. CAGE code 06324 • Hermetic Catalog
Dimensions in Inches (millimeters) unless noted otherwise and are subject to change without notice.

SuperNine® Glass seal hermetic

MIL-DTL-38999 Series III Type

2333-2011 High-Pressure Hermetic Bulkhead Feedthrough

Part Number Development					
Sample Part Number	**2333-2011**	**ZL**	**25-35**	**PS**	**N-T**
Series / Basic Part No.	Hermetic Bulkhead Feed-Through				
Finish	**Z1** = Passivate **ZL** = Nickel Plate				
Shell Size-Insert Arrangement	Per MIL-DTL-38999/MIL-STD-1560				
Contact Type	**PS** = Pin on Jam-Nut Side; Socket Opp. **SP** = Socket on Jam-Nut Side; Pin Opp. **PP** = Pin-Pin **SS** = Socket-Socket				
Polarization	Per Master Key table for Jam-Nut Side Per Minor Keyway table for Opposite Side				

Notes

1. Hermeticity: <1 x 10^-7 ccHe/sec @ delta 1 atmosphere
2. Glenair 2333-2011 will withstand 700 psi open face, and 1000 psi mated in direction indicated

Material / Finish

- Shell and jam-nut - 300 series cres / per P/N development
- Contacts, pin - nickel-iron alloy / gold plate
- Contacts, socket - copper alloy / gold plate
- Insulator, hermetic - full glass
- Insulator, socket - rigid dielectric
- Seals - fluorosilicone blend elastomer
- O-ring, piston - fluorosilicone
- O-ring, flange - fluorosilicone

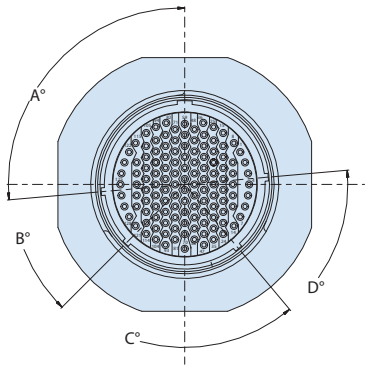

Master Key and Keyway Polarization					
Shell Sizes	**POS**	**A°**	**B°**	**C°**	**D°**
9	N*	105	140	215	265
	A	102	132	248	320
	B	80	118	230	312
	C	35	140	205	275
	D	64	155	234	304
	E	91	131	197	240
11 13 15	N*	95	141	208	236
	A	113	156	182	292
	B	90	145	195	252
	C	53	156	220	255
	D	119	146	176	298
	E	51	141	184	242
17 19 21 23 25	N*	80	142	196	293
	A	135	170	200	310
	B	49	169	200	244
	C	66	140	200	257
	D	62	145	180	280
	E	79	153	197	272

* Designates normal position

Minor Keyway Positions				
Keyway Code	**A°**	**B°**	**C°**	**D°**
T*	95	135	220	275
V	92	127	253	325
W	70	113	235	322
X	35	135	210	285
Y	54	150	239	314
Z	81	126	202	250

* Designates normal position

© 2022 Glenair, Inc • 1211 Air Way, Glendale, CA 91201 • 818-247-6000 • www.glenair.com • U.S. CAGE code 06324 • SuperNine® Catalog
Dimensions in Inches (millimeters) are subject to change without notice.

SuperNine® Glass seal hermetic

MIL-DTL-38999 Series III Type

2333-2011 High-Pressure Hermetic Bulkhead Feedthrough

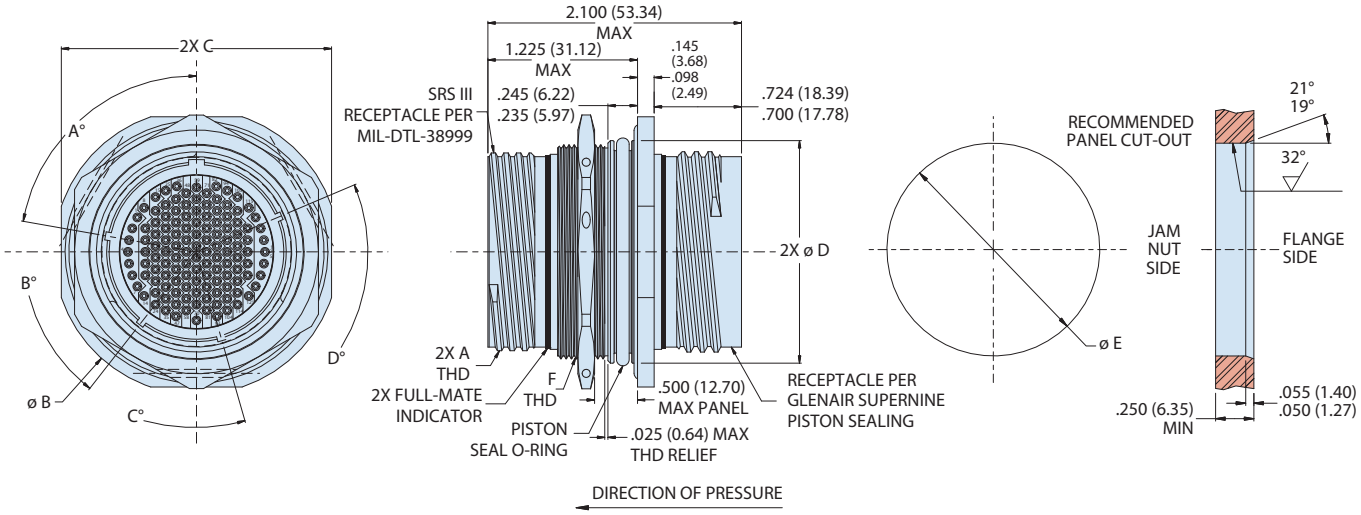

Dimensions						
Shell Size	A Thread 0.1P-0.3L-TS-2	ø B	C	ø D	ø E	F Thread Metric
9	.6250 (15.88)	1.189 (30.20)	1.063 (27.00)	.732/.731 (18.59/18.57)	.736/.734 (18.69/18.64)	M17 X 1.0-6g
11	.7500 (19.05)	1.375 (34.92)	1.252 (31.80)	.861/.860 (21.87/21.84)	.865/.863 (21.97/21.92)	M20 X 1.0-6g
13	.8750 (22.23)	1.500 (38.10)	1.374 (34.90)	1.051/ 1.050 (26.70/26.67)	1.055/ 1.053 (26.80/26.75)	M25 X 1.0-6g
15	1.0000 (25.40)	1.626 (41.30)	1.500 (38.10)	1.176/ 1.175 (29.87/29.85)	1.180/ 1.178 (29.97/29.92)	M28 X 1.0-6g
17	1.1875 (30.16)	1.752 (44.50)	1.626 (41.30)	1.301/ 1.300 (33.05/33.02)	1.305/ 1.303 (33.15/33.10)	M32 X 1.0-6g
19	1.2500 (31.75)	1.937 (49.20)	1.811 (46.00)	1.426/ 1.425 (36.22/36.20)	1.430/ 1.428 (36.32/36.27)	M35 X 1.0-6g
21	1.3750 (34.92)	2.063 (52.40)	1.937 (49.20)	1.551/ 1.550 (39.40/39.37)	1.555/ 1.553 (39.50/39.45)	M38 X 1.0-6g
23	1.5000 (38.10)	2.189 (55.60)	2.063 (52.40)	1.676/ 1.675 (42.57/42.55)	1.680/ 1.676 (42.67/42.57)	M41 X 1.0-6g
25	1.6250 (41.28)	2.311 (58.70)	2.189 (55.60)	1.802/ 1.801 (45.77/45.75)	1.807/ 1.805 (45.90/45.85)	M44 X 1.0-6g

© 2022 Glenair, Inc • 1211 Air Way, Glendale, CA 91201 • 818-247-6000 • www.glenair.com • U.S. CAGE code 06324 • SuperNine® Catalog
Dimensions in Inches (millimeters) are subject to change without notice.

Rev. 12.26.24

SuperNine® Glass seal hermetic

MIL-DTL-38999 Series III Type

233-277 1000 PSI rated piston seal solder cup receptacle

Part Number Development						
Sample Part Number	**233-277**	**-H7**	**Z1**	**9-35**	**P**	**T**
Series / Basic Part No.	Series 23 SuperNine Hermetic					
Connector Style	**H7** = Jam-Nut Mount with Accessory Thread **BH7** = Jam-Nut Mount with Single Band, Banding Porch					
Finish*	**Z1** = CRES, Passivated **ZL** = CRES, Nickel Finish					
Shell Size/Insert Arrangement*	Per MIL-DTL-38999/MIL-STD-1560					
Contact Style	**P** = Pin Face, Solder Cup **S** = Socket Face, Solder Cup					
Polarization*	**V**, **W**, **X**, **Y**, **Z**, **T** = Normal					

***Refer to Section A for complete details, consult factory for additional options**
Modification codes may be added directly to the end of any valid part number

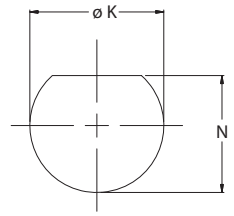

RECOMMENDED PANEL CUT-OUT

Jam-Nut Panel Cut-Out Dimensions			
SHELL SIZE CODE	SHELL SIZE	K DIA	N
A	9	.703 (17.86) .693 (17.60)	.661 (16.79) .656 (16.66)
B	11	.835 (21.21) .825 (20.96)	.771 (19.58) .761 (19.33)
C	13	1.020 (25.91) 1.010 (25.65)	.955 (24.26) .945 (24.00)
D	15	1.145 (29.08) 1.135 (28.83)	1.085 (27.56) 1.075 (27.30)
E	17	1.270 (32.26) 1.260 (32.00)	1.210 (30.73) 1.200 (30.48)
F	19	1.395 (35.43) 1.385 (35.18)	1.335 (33.91) 1.325 (33.65)
G	21	1.520 (38.61) 1.510 (38.35)	1.460 (37.08) 1.450 (36.83)
H	23	1.645 (41.78) 1.635 (41.53)	1.585 (40.26) 1.575 (40.00)
J	25	1.770 (44.96) 1.760 (44.70)	1.710 (43.43) 1.700 (43.18)

Band Platform Dimensions			
SHELL SIZE CODE	SHELL SIZE	øEE	øFF
A	9	.475 (12.07)	.538 (13.67)
B	11	.600 (15.24)	.662 (16.81)
C	13	.700 (17.78)	.762 (19.35)
D	15	.835 (21.21)	.898 (22.81)
E	17	.960 (24.38)	1.022 (25.96)
F	19	1.062 (26.97)	1.125 (28.58)
G	21	1.188 (30.18)	1.250 (31.75)
H	23	1.275 (32.39)	1.338 (33.99)
J	25	1.475 (37.47)	1.538 (39.07)

Material/finish:

- Shell and jam-nut: 300 series CRES per part number development
- Contacts, pin: nickel iron alloy 52/gold plate
- Contacts, socket: copper alloy/gold plate
- Insulator, hermetic: fused vitreous glass/none
- Insulator, socket: high grade rigid dielectric/none.
- O-ring and Seals: fluorosilicone/none

NOTES

1. Hermeticity: <1 x 10^-7 ccHe/sec @ 1 ATM, delta pressure
2. Glenair 233-277-H7 and 233-277-BH7 receptacle connector is designed to mate with 233-274 plug connector having the same insert arrangement, polarization, and opposite contact gender.

© 2022 Glenair, Inc • 1211 Air Way, Glendale, CA 91201 • 818-247-6000 • www.glenair.com • U.S. CAGE code 06324 • SuperNine® Catalog
Dimensions in Inches (millimeters) are subject to change without notice.

Rev. 10/26/22

SuperNine® Glass seal hermetic

MIL-DTL-38999 Series III Type

233-277 1000 PSI rated piston seal solder cup receptacle

233-277-H7 OR -BH7 JAM-NUT RECEPTACLE WITH ACCESSORY THREADS OR BANDING PORCH

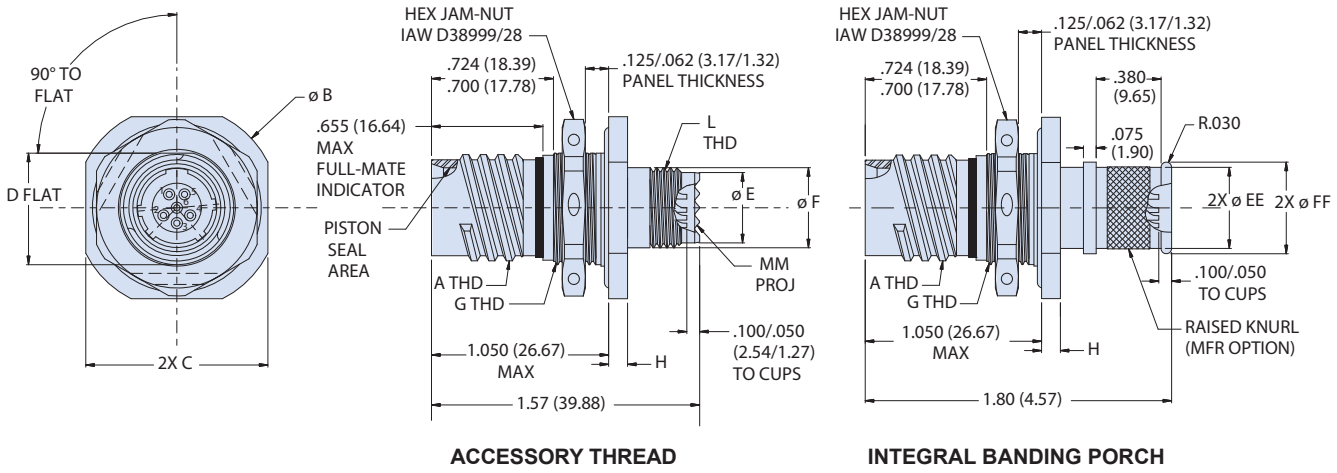

ACCESSORY THREAD **INTEGRAL BANDING PORCH**

Dimensions										
SHELL SIZE	A THREAD -0.1P-0.3L-TS	ø B	C A/F ±.015	D FLAT ±.005	ø E ±.003	ø F REF	G THREAD ISO METRIC	H ±.008	L THREAD ISO METRIC	MM PROJ
9	0.625	1.201 (30.51) 1.177 (29.90)	1.063 (27.00)	0.650 (16.51)	0.413 (10.49)	0.472 (11.99)	M17 X 1.0-6g	0.106 (2.69)	M12 X 1.0-6g	12
11	0.750	1.386 (35.20) 1.362 (34.59)	1.252 (31.80)	0.750 (19.05)	0.531 (13.49)	0.591 (15.01)	M20 X 1.0-6g	0.106 (2.69)	M15 X 1.0-6g	16
13	0.875	1.512 (38.40) 1.488 (37.80)	1.374 (34.90)	0.937 (23.80)	0.650 (16.51)	0.789 (20.04)	M25 X 1.0-6g	0.106 (2.69)	M18 X 1.0-6g	20
15	1.000	1.638 (41.61) 1.614 (41.00)	1.500 (38.10)	1.061 (26.95)	0.807 (20.50)	0.866 (22.00)	M28 X 1.0-6g	0.106 (2.69)	M22 X 1.0-6g	24
17	1.187	1.764 (44.81) 1.740 (44.20)	1.626 (41.30)	1.186 (30.12)	0.925 (23.50)	0.984 (24.99)	M32 X 1.0-6g	0.106 (2.69)	M25 X 1.0-6g	28
19	1.250	1.949 (49.50) 1.925 (48.90)	1.811 (46.00)	1.311 (33.30)	1.043 (26.49)	1.102 (27.99)	M35 X 1.0-6g	0.138 (3.51)	M28 X 1.0-6g	32
21	1.375	2.075 (52.71) 2.051 (52.10)	1.937 (49.20)	1.436 (36.47)	1.161 (29.49)	1.220 (30.99)	M38 X 1.0-6g	0.138 (3.51)	M31 X 1.0-6g	36
23	1.500	2.201 (55.91) 2.177 (55.30)	2.063 (52.40)	1.561 (39.65)	1.279 (32.49)	1.339 (34.01)	M41 X 1.0-6g	0.138 (3.51)	M34 X 1.0-6g	40
25	1.625	2.323 (59.00) 2.299 (58.39)	2.189 (55.60)	1.686 (42.82)	1.397 (35.48)	1.457 (37.01)	M44 X 1.0-6g	0.138 (3.51)	M37 X 1.0-6g	44

© 2022 Glenair, Inc • 1211 Air Way, Glendale, CA 91201 • 818-247-6000 • www.glenair.com • U.S. CAGE code 06324 • SuperNine® Catalog
Dimensions in Inches (millimeters) are subject to change without notice.

Rev. 05/20/22

SuperNine® Glass seal hermetic

MIL-DTL-38999 Series III Type

233-278 1000 PSI rated piston seal crimp removable receptacle

Part Number Development						
Sample Part Number	**233-278**	**-H7**	**Z1**	**9-35**	**P**	**N**
Series / Basic Part No.	Series 23 SuperNine Hermetic					
Connector Style	**H7** = Jam-Nut Mount with Accessory Thread **BH7** = Jam-Nut Mount with Single Band, Banding Porch					
Finish*	**Z1** = CRES, Passivated **ZL** = CRES, Nickel Finish					
Shell Size/Insert Arrangement*	Per MIL-DTL-38999/MIL-STD-1560					
Contact Style	**P** = Pin Face **S** = Socket Face					
Polarization*	**V**, **W**, **X**, **Y**, **Z**, **T** = Normal					

***Refer to Section A for complete details, consult factory for additional options**
Modification codes may be added directly to the end of any valid part number

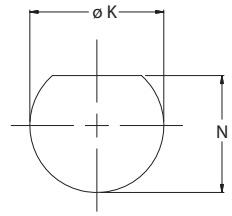

RECOMMENDED PANEL CUT-OUT

Jam-Nut Panel Cut-Out Dimensions			
SHELL SIZE CODE	SHELL SIZE	K DIA	N
A	9	.703 (17.86) .693 (17.60)	.661 (16.79) .656 (16.66)
B	11	.835 (21.21) .825 (20.96)	.771 (19.58) .761 (19.33)
C	13	1.020 (25.91) 1.010 (25.65)	.955 (24.26) .945 (24.00)
D	15	1.145 (29.08) 1.135 (28.83)	1.085 (27.56) 1.075 (27.30)
E	17	1.270 (32.26) 1.260 (32.00)	1.210 (30.73) 1.200 (30.48)
F	19	1.395 (35.43) 1.385 (35.18)	1.335 (33.91) 1.325 (33.65)
G	21	1.520 (38.61) 1.510 (38.35)	1.460 (37.08) 1.450 (36.83)
H	23	1.645 (41.78) 1.635 (41.53)	1.585 (40.26) 1.575 (40.00)
J	25	1.770 (44.96) 1.760 (44.70)	1.710 (43.43) 1.700 (43.18)

Band Platform Dimensions			
SHELL SIZE CODE	SHELL SIZE	øEE	øFF
A	9	.475 (12.07)	.538 (13.67)
B	11	.600 (15.24)	.662 (16.81)
C	13	.700 (17.78)	.762 (19.35)
D	15	.835 (21.21)	.898 (22.81)
E	17	.960 (24.38)	1.022 (25.96)
F	19	1.062 (26.97)	1.125 (28.58)
G	21	1.188 (30.18)	1.250 (31.75)
H	23	1.275 (32.39)	1.338 (33.99)
J	25	1.475 (37.47)	1.538 (39.07)

Material/finish:

- Shell and jam-nut: 300 series CRES per part number development
- Contacts, pin: nickel iron alloy 52/gold plate
- Contacts, socket: copper alloy/gold plate
- Insulator, hermetic: fused vitreous glass/N.A.
- Insulator, socket: high grade rigid dielectric/N.A.
- O-ring and Seals: fluorosilicone/N.A

NOTES

1. Hermeticity: <1 x 10^-7 ccHe/sec @ 1 ATM, delta pressure
2. Glenair 233-277-H7 and 233-277-BH7 receptacle connector is designed to mate with 233-274 plug connector having the same insert arrangement, polarization, and opposite contact gender.

© 2022 Glenair, Inc • 1211 Air Way, Glendale, CA 91201 • 818-247-6000 • www.glenair.com • U.S. CAGE code 06324 • SuperNine® Catalog
Dimensions in Inches (millimeters) are subject to change without notice.

Rev. 05/20/22

SuperNine® Glass seal hermetic

MIL-DTL-38999 Series III Type

233-278 1000 PSI rated piston seal crimp removable receptacle

233-278-H7 OR -BH7 JAM-NUT RECEPTACLE WITH ACCESSORY THREADS OR BANDING PORCH

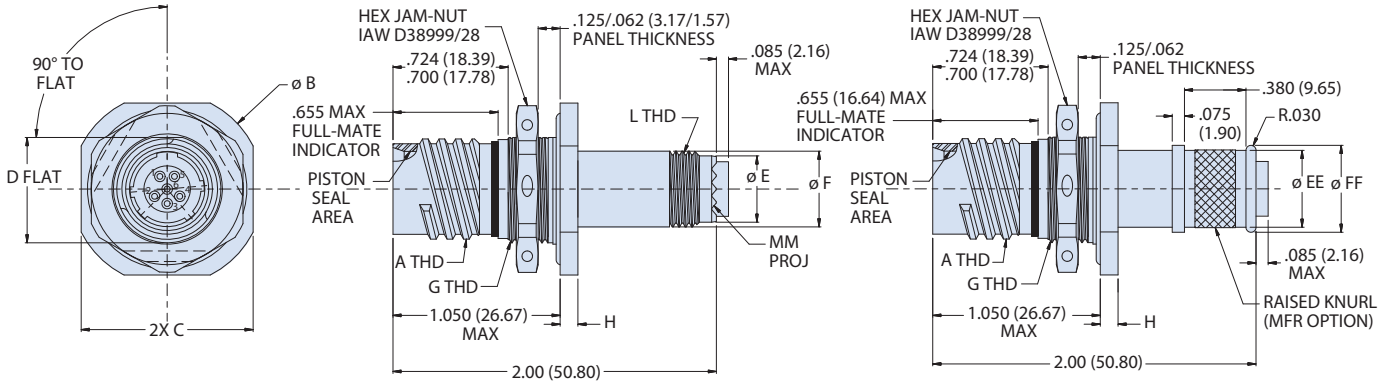

ACCESSORY THREAD **INTEGRAL BANDING PORCH**

Dimensions												
SHELL SIZE	A THREAD -0.1P-0.3L-TS	ø B	C A/F ±.015	D FLAT ±.005	ø E ±.003	ø F REF	G THREAD ISO METRIC	H ±.008	ø J ±.005	K ±.005 EX SZ 9	L THREAD ISO METRIC	MM PROJ
9	0.625	1.201 (30.51) 1.177 (29.90)	1.063 (27.00)	0.650 (16.51)	0.413 (10.49)	0.472 (11.99)	M17 X 1.0-6g	0.106 (2.69)	0.698 (17.73)	.661 (16.79) .656 (16.66)	M12 X 1.0-6g	12
11	0.750	1.386 (35.20) 1.362 (34.59)	1.252 (31.80)	0.750 (19.05)	0.531 (13.49)	0.591 (15.01)	M20 X 1.0-6g	0.106 (2.69)	0.830 (21.08)	0.766 (19.46)	M15 X 1.0-6g	16
13	0.875	1.512 (38.40) 1.488 (37.80)	1.374 (34.90)	0.937 (23.80)	0.650 (16.51)	0.789 (20.04)	M25 X 1.0-6g	0.106 (2.69)	1.015 (25.78)	0.950 (24.13)	M18 X 1.0-6g	20
15	1.000	1.638 (41.61) 1.614 (41.00)	1.500 (38.10)	1.061 (26.95)	0.807 (20.50)	0.866 (22.00)	M28 X 1.0-6g	0.106 (2.69)	1.140 (28.96)	1.080 (27.43)	M22 X 1.0-6g	24
17	1.187	1.764 (44.81) 1.740 (44.20)	1.626 (41.30)	1.186 (30.12)	0.925 (23.50)	0.984 (24.99)	M32 X 1.0-6g	0.106 (2.69)	1.265 (32.13)	1.205 (30.61)	M25 X 1.0-6g	28
19	1.250	1.949 (49.50) 1.925 (48.90)	1.811 (46.00)	1.311 (33.30)	1.043 (26.49)	1.102 (27.99)	M35 X 1.0-6g	0.138 (3.51)	1.390 (35.31)	1.330 (33.78)	M28 X 1.0-6g	32
21	1.375	2.075 (52.71) 2.051 (52.10)	1.937 (49.20)	1.436 (36.47)	1.161 (29.49)	1.220 (30.99)	M38 X 1.0-6g	0.138 (3.51)	1.515 (38.48)	1.455 (36.96)	M31 X 1.0-6g	36
23	1.500	2.201 (55.91) 2.177 (55.30)	2.063 (52.40)	1.561 (39.65)	1.279 (32.49)	1.339 (34.01)	M41 X 1.0-6g	0.138 (3.51)	1.640 (41.66)	1.580 (40.13)	M34 X 1.0-6g	40
25	1.625	2.323 (59.00) 2.299 (58.39)	2.189 (55.60)	1.686 (42.82)	1.397 (35.48)	1.457 (37.01)	M44 X 1.0-6g	0.138 (3.51)	1.765 (44.83)	1.705 (43.31)	M37 X 1.0-6g	44

© 2022 Glenair, Inc • 1211 Air Way, Glendale, CA 91201 • 818-247-6000 • www.glenair.com • U.S. CAGE code 06324 • SuperNine® Catalog
Dimensions in Inches (millimeters) are subject to change without notice.

Rev. 05/20/22

SuperNine® Glass seal hermetic

MIL-DTL-38999 Series III Type

233-263 Bulkhead feed-thru with 10G High-Speed Contacts

Part Number Development								
Sample Part Number	**233-263**	**–H7**	**ZL**	**25**	**-7**	**S**	**N**	**-2**
Series - Basic Part No.	**233-263** = SuperNine Hermetic High-Speed Bulkhead Feedthru							
Connector Style*	**H2** = Square Flange Mount; **H7** = Jam-Nut Mount; **DH7** = Dual O-ring Jam-Nut Mount; **H8** = Weld Mount							
Material/Finish	**Z1** = 300 Series CRES; Passivated; **ZL** = 300 Series CRES; Electroless Nickel							
Shell Size	**11**, **19**, **21**, **25**							
Insert Arrangement	See Insert Arrangement Table							
Module Type	**P** = Pin; **S** = Socket; **A** = Connector Less Contacts							
Alternate Polarization	**A**, **B**, **C**, **D**, **E**, **N** = Normal (IAW MIL-DTL-38999 Series III); see alternate keyway positions table.							
Panel Thickness	**2** = .250							





Receptacle, Alternate Keyway Positions

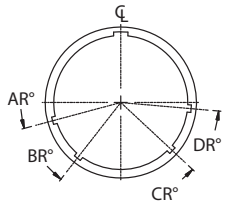

Shell Size Code	Shell Size	Alternate Position Code	AR°	BR°	CR°	DR°
B	11	N	95	141	208	236
		A	113	156	182	292
		B	90	145	195	252
		C	53	156	220	255
		D	119	146	176	298
		E	51	141	184	242
F G J	19 21 25	N	80	142	196	293
		A	135	170	200	310
		B	49	169	200	244
		C	66	140	200	257
		D	62	145	180	280
		E	79	153	197	272

Insert Arrangements

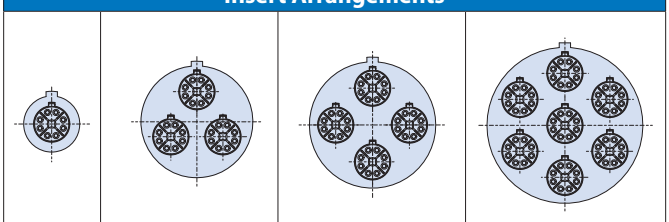

11-1	19-3	21-4	25-7

NOTES

1. Contact factory for other plating options
2. SpeedMaster insert arrangements are exclusive to SpeedMaster™ and are unrelated to other insert patterns of the same name
3. Glenair 233-263 is only designed to mate with Glenair 233-219-G6 connector of the same shell size, polarization, and opposite gender
4. Hermeticity: less than 1 x 10^{-7} ccHe/sec at 1 atmosphere differential.
5. 233-263 connector is only available as pin to socket or socket to pin
6. Contacts are non removable
7. Material / Finish

- Shell and jam-nut: CRES/passivate or CRES/nickel plate
- Contacts pin: nickel/iron alloy/gold
- Contacts sockets: copper alloy/gold
- Insulator hermetic: full glass/N.A
- Insulator socket: high grade dielectric/N.A
- Grounding members: copper alloy/electroless nickel
- Seals: fluorosilicone blend/N.A.

© 2022 Glenair, Inc • 1211 Air Way, Glendale, CA 91201 • 818-247-6000 • www.glenair.com • U.S. CAGE code 06324 • SuperNine® Catalog

Dimensions in Inches (millimeters) are subject to change without notice.

SuperNine® Glass seal hermetic

MIL-DTL-38999 Series III Type

233-263 Bulkhead feed-thru with 10G High-Speed Contacts

H2 - SQUARE FLANGE MOUNT BULKHEAD FEED-THRU

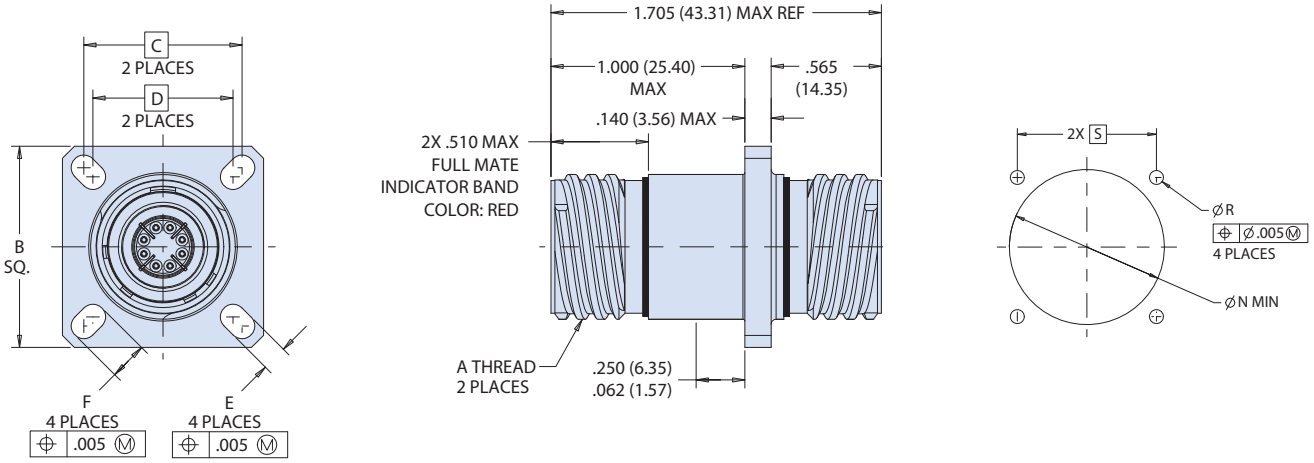

Square Flange Mount Dimensions								
Shell Size	A THREAD	B	C Basic	D Basic	E	F	ØR Holes	S Basic
11	.7500-.1P-.3L-TS-2A	1.040 (26.42) 1.016 (25.81)	0.812 (20.62)	0.719 (18.26)	0.136 (3.45) 0.120 (3.05)	0.198 (5.03) 0.190 (4.83)	0.133 (3.38) 0.123 (3.12)	0.812 (20.62)
19	1.2500-.1P-.3L-TS-2A	1.449 (36.80) 1.425 (36.20)	1.156 (29.36)	1.062 (26.97)		0.202 (5.13) 0.186 (4.72)		1.156 (29.36)
21	1.3750-.1P-.3L-TS-2A	1.575 (40.00) 1.551 (39.40)	1.250 (31.75)	1.156 (29.36)				1.250 (31.75)
25	1.6250-.1P-.3L-TS-2A	1.823 (46.30) 1.799 (45.69)	1.500 (38.10)	1.375 (34.92)	0.162 (4.11) 0.146 (3.71)	0.250 (6.35) 0.234 (5.94)	0.155 (3.94) 0.145 (3.68)	1.500 (38.10)

© 2022 Glenair, Inc • 1211 Air Way, Glendale, CA 91201 • 818-247-6000 • www.glenair.com • U.S. CAGE code 06324 • SuperNine® Catalog
Dimensions in Inches (millimeters) are subject to change without notice.

SuperNine® Glass seal hermetic

MIL-DTL-38999 Series III Type

233-263 Bulkhead feed-thru with 10G High-Speed Contacts

H8 - WELD MOUNT BULKHEAD FEED-THRU

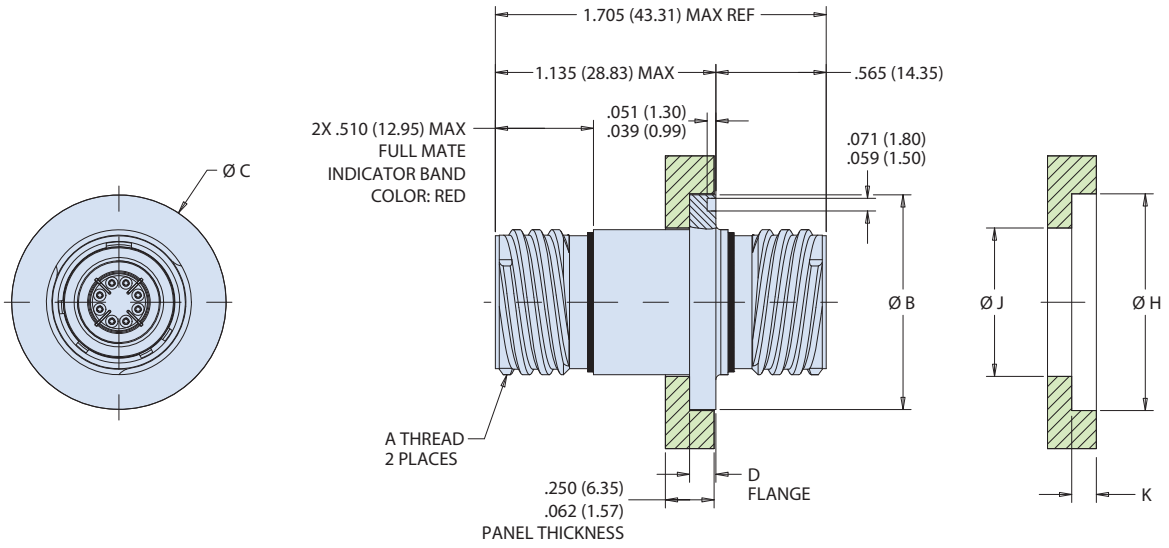

Weld Mount Dimensions							
Shell Size	A Thread	B	C	D	ØH	ØJ	ØK ±.005 (0.13)
11	.7500-.1P-.3L-TS-2A	1.063 (27.00) 1.051 (26.70)	1.106 (28.09) 1.094 (27.79)	0.134 (3.40) 0.118 (3.00)	1.112 (28.24) 1.107 (28.12)	.760 (19.30)	.126 (3.20)
19	1.2500-.1P-.3L-TS-2A	1.547 (39.29) 1.535 (38.99)	1.591 (40.41) 1.579 (40.11)		1.597 (40.56) 1.592 (40.44)	1.260 (32.00)	
21	1.3750-.1P-.3L-TS-2A	1.689 (42.90) 1.677 (42.60)	1.732 (43.99) 1.720 (43.69)		1.738 (44.15) 1.733 (44.02)	1.385 (35.18)	
25	1.6250-.1P-.3L-TS-2A	1.941 (49.30) 1.929 (49.00)	1.984 (50.39) 1.972 (50.09)	0.165 (4.19) 0.149 (3.78)	1.990 (50.55) 1.985 (50.42)	1.635 (41.53)	.15 (3.81)

© 2022 Glenair, Inc • 1211 Air Way, Glendale, CA 91201 • 818-247-6000 • www.glenair.com • U.S. CAGE code 06324 • SuperNine® Catalog
Dimensions in Inches (millimeters) are subject to change without notice.

SuperNine® Glass seal hermetic

MIL-DTL-38999 Series III Type

233-263 Bulkhead feed-thru with 10G High-Speed Contacts

H7 - JAM-NUT MOUNT BULKHEAD FEED-THRU

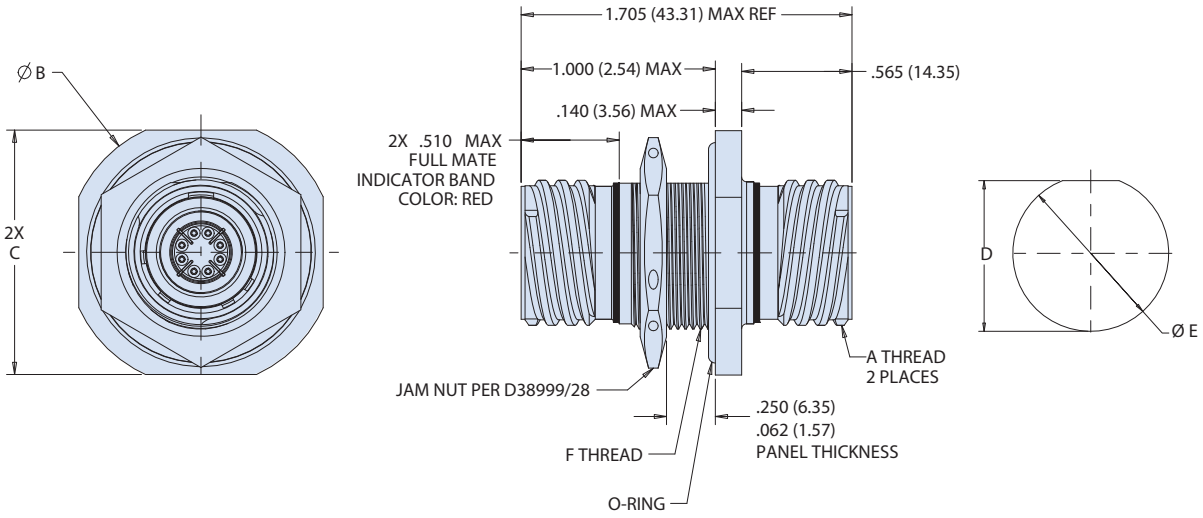

Jam-Nut Mount Dimensions				
Shell Size	A Thread	Ø B	C Max	F Thread
11	.7500-.1P-.3L-TS-2A	1.375 (34.92)	1.252 (31.80)	M20x1.0-6g 0.100R
19	1.2500-.1P-.3L-TS-2A	1.937 (49.20)	1.811 (46.00)	M35x1.0-6g 0.100R
21	1.3750-.1P-.3L-TS-2A	2.063 (52.40)	1.937 (49.20)	M38x1.0-6g 0.100R
25	1.6250-.1P-.3L-TS-2A	2.311 (58.70)	2.189 (55.60)	M44x1.0-6g 0.100R

Dual O-Ring Jam-Nut Mount Dimensions				
Shell Size	A Thread	Ø B	C Max	F Thread
11	.7500-.1P-.3L-TS-2A	1.625 (41.28)	1.500 (38.10)	M20x1.0-6g 0.100R
19	1.2500-.1P-.3L-TS-2A	2.189 (55.60)	2.063 (52.40)	M35x1.0-6g 0.100R
21	1.3750-.1P-.3L-TS-2A	2.311 (58.70)	2.189 (55.60)	M38x1.0-6g 0.100R
25	1.6250-.1P-.3L-TS-2A	2.625 (66.68)	2.400 (60.96)	M44x1.0-6g 0.100R

Jam-Nut Panel Cut-Out Dimensioons		
SHELL SIZE	ØD	E FLAT
11	0.835 (21.21) 0.825 (20.96)	0.771 (19.58) 0.761 (19.33)
19	1.395 (35.43) 1.385 (35.18)	1.335 (33.91) 1.325 (33.65)
21	1.520 (38.61) 1.510 (38.35)	1.460 (37.08) 1.450 (36.83)
25	1.770 (44.96) 1.760 (44.70)	1.710 (43.43) 1.700 (43.18)

© 2022 Glenair, Inc • 1211 Air Way, Glendale, CA 91201 • 818-247-6000 • www.glenair.com • U.S. CAGE code 06324 • SuperNine® Catalog
Dimensions in Inches (millimeters) are subject to change without notice.

SuperNine® Glass seal hermetic

MIL-DTL-38999 Series III Type

233-262 PC tail receptacles with shielded contacts

Part Number Development								
Sample Part Number	**233-262**	**-H2**	**Z1**	**17**	**Q**	**-02**	**S**	**N**
Series / Basic Part No.	Series 23 SuperNine Hermetic							
Connector Style	**H2** = Box Mount **H7** = Jam-Nut, Mount **DH7** = Dual O-ring Jam-Nut Mount **H8** = Weld Mount							
Finish*	**Z1** = CRES, Passivated **ZL** = CRES, Nickel Finish							
Shell Size*	Per MIL-STD-1560. See also special RF contact shell size/contact arrangements beginning on page D-6.							
RF Contact	**C** = Coax, 50 OHM **C1** = Coax, 75 OHM **P** = Power **Q** = Quadrax, size #8 only **T** = Concentric twinax, size #8 only							
Insert Arrangement*	Per MIL-STD-1560. See also special RF contact shell size/contact arrangements beginning on page 8.							
Contact Style	**P** = Pin, PC Tail **S** = Socket, PC Tail							
Polarization*	**A**, **B**, **C**, **D**, **E**, **N** = Normal							

***Refer to Section A for complete details, consult factory for additional options**
Modification codes may be added directly to the end of any valid part number

233-262 HIGH-SPEED / RF SHIELDED CONTACT, PCB FOOTPRINTS

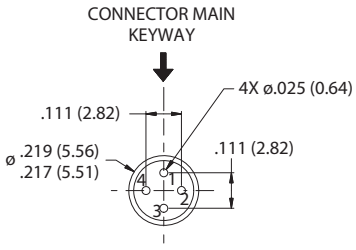

QUADRAX PIN INTERFACE (CAVITY ID REFERENCE ONLY) FOR 100 OHM NOMINAL IMPEDANCE

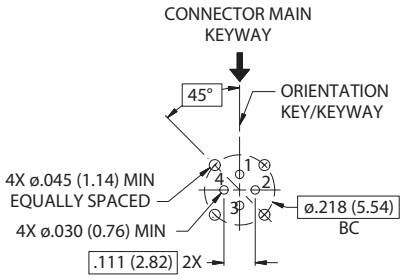

RECOMMENDED QUADRAX PC BOARD LAYOUT (PIN ID SHOWN)

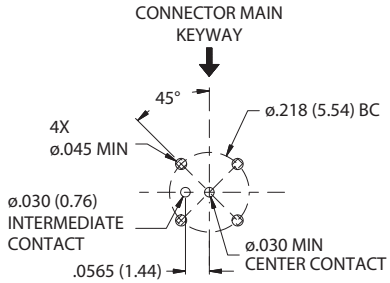

RECOMMENDED TWINAX PCB LAYOUT

Contact Performance	
SIZE & TYPE	**FREQ., MAX**
16 Coax	500 MHz
8 Coax	1 GHz
8 Twinax (Conc.)	20 MHz
8 Quadrax	1 GHz

PC Tail Diameter	
CONTACT SIZE	**PC TAIL ØL**
No 22	.020 (0.51)/.018 (0.46)
No 20	.030 (0.76)/.028 (0.71)
No 16	.040 (1.02)/.038 (0.97)
No 12	.072 (1.83)/.070 (1.78)
No 8	.182 (4.62)/.178 (4.52)

Material/finish:

- Shell and jam-nut (H7 and DH7 only): 300 series CRES per part number development
- Contacts, pin: nickel-iron and nickel alloy/gold plate
- Contacts, socket: copper alloy/gold plate
- Hoods, sockets: CRES/passivate
- Insulator, hermetic: full glass/N.A.
- Insulator, socket: rigid dielectric/N.A.
- Seals: fluorosilicone blend elastomer/ N.A

© 2022 Glenair, Inc • 1211 Air Way, Glendale, CA 91201 • 818-247-6000 • www.glenair.com • U.S. CAGE code 06324 • SuperNine® Catalog

Dimensions in Inches (millimeters) are subject to change without notice.

SuperNine® Glass seal hermetic

MIL-DTL-38999 Series III Type

233-262 PC tail receptacles with shielded contacts

233-262-H2 BOX MOUNT RECEPTACLE

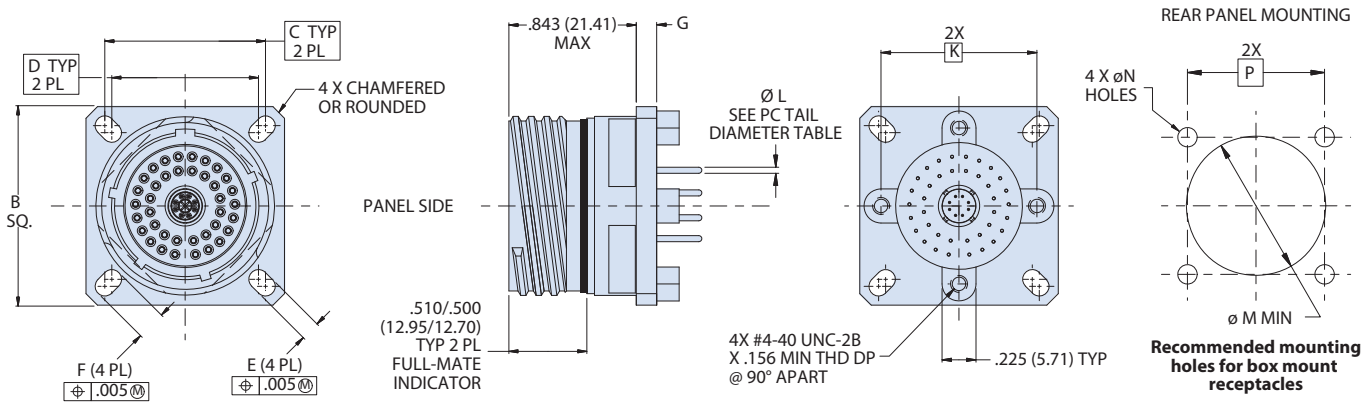

Box Mount Receptacle Dimesions								
SHELL SIZE	A THREAD	B SQ	C BSC	D BSC	E	F	G	K BSC
9	.6250-.1P-.3L-TS-2A	.949 (24.10) .925 (23.50)	.719 (18.26)	.594 (15.09)	.136 (3.45) .120 (3.05)	.224 (5.69) .208 (5.28)	.122 (3.10) .083 (2.11)	.594 (15.09)
11	.7500-.1P-.3L-TS-2A	1.043 (26.49) 1.019 (25.88)	.812 (20.62)	.719 (18.26)	.136 (3.45) .120 (3.05)	.202 (5.13) .186 (4.72)		.719 (18.26)
13	.8750-.1P-.3L-TS-2A	1.138 (28.91) 1.114 (28.30)	.906 (23.01)	.812 (20.62)	.136 (3.45) .120 (3.05)	.202 (5.13) .186 (4.72)		.812 (20.62)
15	1.0000-.1P-.3L-TS-2A	1.232 (31.29) 1.208 (30.68)	.969 (24.61)	.906 (23.01)	.136 (3.45) .120 (3.05)	.181 (4.60) .165 (4.19)		.906 (23.01)
17	1.1875-.1P-.3L-TS-2A	1.323 (33.60) 1.299 (32.99)	1.062 (26.97)	.969 (24.61)	.136 (3.45) .120 (3.05)	.202 (5.13) .186 (4.72)	.153 (3.89) .114 (2.90)	1.030 (26.16)
19	1.2500-.1P-.3L-TS-2A	1.449 (36.80) 1.425 (36.20)	1.156 (29.36)	1.062 (26.97)	.136 (3.45) .120 (3.05)	.202 (5.13) .186 (4.72)		1.150 (29.21)
21	1.3750-.1P-.3L-TS-2A	1.575 (40.00) 1.551 (39.40)	1.250 (31.75)	1.156 (29.36)	.136 (3.45) .120 (3.05)	.202 (5.13) .186 (4.72)		1.221 (31.01)
23	1.5000-.1P-.3L-TS-2A	1.701 (43.21) 1.677 (42.60)	1.375 (34.92)	1.250 (31.75)	.162 (4.11) .146 (3.71)	.250 (6.35) .234 (5.94)		1.360 (34.54)
25	1.6250-.1P-.3L-TS-2A	1.823 (46.30) 1.799 (45.69)	1.500 (38.10)	1.375 (34.92)	.162 (4.11) .146 (3.71)	.250 (6.35) .234 (5.94)		1.475 (37.47)

Box Mount, Mounting Hole Dimensions											
SHELL SIZE	Ø M MIN	Ø N HOLES	P BSC	SHELL SIZE	Ø M MIN	Ø N HOLES	P BSC	SHELL SIZE	Ø M MIN	Ø N HOLES	P BSC
9	.656 (16.66)	.133 (3.38) .123 (3.12)	.724 (18.39) .714 (18.14)	15	1.047 (26.59)	.133 (3.38) .123 (3.12)	.973 (24.71) .963 (24.46)	21	1.421 (36.09)	.133 (3.38) .123 (3.12)	1.255 (31.88) 1.245 (31.62)
11	.781 (19.84)	.133 (3.38) .123 (3.12)	.817 (20.75) .807 (20.50)	17	1.218 (30.94)	.133 (3.38) .123 (3.12)	1.067 (27.10) 1.057 (26.85)	23	1.546 (39.27)	.159 (4.04) .149 (3.78)	1.380 (35.05) 1.370 (34.80)
13	.921 (23.39)	.133 (3.38) .123 (3.12)	.911 (23.14) .901 (22.89)	19	1.296 (32.92)	.133 (3.38) .123 (3.12)	1.161 (29.49) 1.151 (29.24)	25	1.672 (42.47)	.159 (4.04) 1.495 (37.97)	1.505 (38.23) 1.495 (37.97)

NOTES

1. Hermeticity: <1 x 10^-7 ccHe/sec @ 1 ATM, delta pressure
2. Insert arrangements per MIL-STD-1560
3. See page B-8 "Standard 1560 RF Contact Arrangements". Arrangements are per MIL-STD-1560, and contact types are per the standard, or specified option. Where there are #12 and #8 in the arrangement, the options are #8 only. Size #16 are only available as coax. Consult factory for other contact options
4. Coax contact mating interfaces shall be in accordance with the following:
   - Size #16 per M39029/76 and /77
   - Size #12 per M39029/102 and /103
   - Size #8 per M39029/59 and /60

© 2022 Glenair, Inc • 1211 Air Way, Glendale, CA 91201 • 818-247-6000 • www.glenair.com • U.S. CAGE code 06324 • SuperNine® Catalog
Dimensions in Inches (millimeters) are subject to change without notice.

SuperNine® Glass seal hermetic

MIL-DTL-38999 Series III Type

233-262 PC tail receptacles with shielded contacts

233-262-H7 JAM-NUT MOUNT RECEPTACLE AND 233-262-DH7 JAM-NUT MOUNT DUAL O-RING RECEPTACLE

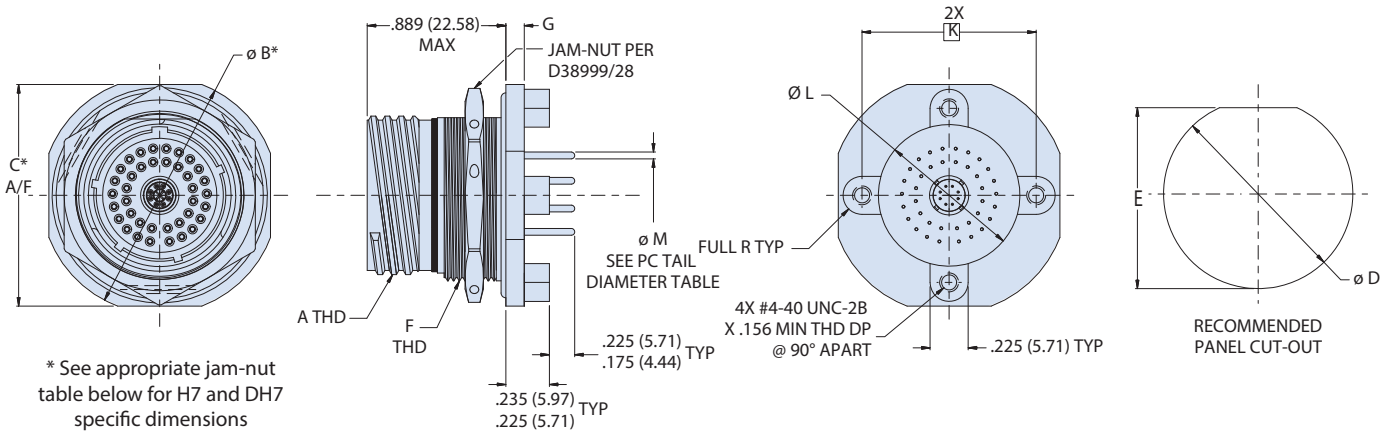

* See appropriate jam-nut table below for H7 and DH7 specific dimensions

Jam-Nut Dimensions					
SHELL SIZE	A THREAD .1P-.3L-TS-2A	F THREAD METRIC 0.100R	G	Ø L	K BSC
9	.6250	M17 X 1.0-6g	.122 (3.10) .083 (2.11)	.340 (8.64)	.594 (15.09)
11	.7500	M20 X 1.0-6g		.468 (11.89)	.719 (18.26)
13	.8750	M25 X 1.0-6g		.572 (14.53)	.812 (20.62)
15	1.0000	M28 X 1.0-6g		.705 (17.91)	.906 (23.01)
17	1.1875	M32 X 1.0-6g		.830 (21.08)	1.030 (26.16)
19	1.2500	M35 X 1.0-6g	.153 (3.89) .114 (2.90)	.934 (23.72)	1.150 (29.21)
21	1.3750	M38 X 1.0-6g		1.055 (26.80)	1.221 (31.01)
23	1.5000	M41 X 1.0-6g		1.160 (29.46)	1.360 (34.54)
25	1.6250	M44 X 1.0-6g		1.307 (33.20)	1.475 (37.47)

Jam-Nut (H7), Mounting Hole Dimensions		
SHELL SIZE	Ø B ±.012	C FLAT ±.016
9	1.189 (30.20)	1.063 (27.00)
11	1.375 (34.92)	1.252 (31.80)
13	1.500 (38.10)	1.374 (34.90)
15	1.626 (41.30)	1.500 (38.10)
17	1.752 (44.50)	1.626 (41.30)
19	1.937 (49.20)	1.811 (46.00)
21	2.063 (52.40)	1.937 (49.20)
23	2.189 (55.60)	2.063 (52.40)
25	2.311 (58.70)	2.189 (55.60)

Dual O-ring Jam-Nut (DH7), Mounting Hole Dimensions		
SHELL SIZE	Ø B	C FLAT
9	1.500 (38.10)	1.375 (34.92)
11	1.625 (41.28)	1.500 (38.10)
13	1.752 (44.50)	1.626 (41.30)
15	1.937 (49.20)	1.811 (46.00)
17	2.063 (52.40)	1.937 (49.20)
19	2.189 (55.60)	2.063 (52.40)
21	2.311 (58.70)	2.189 (55.60)
23	2.500 (63.50)	2.300 (58.42)
25	2.625 (66.68)	2.400 (60.96)

Jam-Nut, Mounting Hole Dimensions		
SHELL SIZE	Ø D	E DIM
9	.703 (17.86) .693 (17.60)	.661 (16.79) .655 (16.64)
11	.835 (21.21) .825 (20.96)	.771 (19.58) .761 (19.33)
13	1.020 (25.91) 1.010 (25.65)	.955 (24.26) .945 (24.00)
15	1.145 (29.08) 1.135 (28.83)	1.085 (27.56) 1.075 (27.30)
17	1.270 (32.26) 1.260 (32.00)	1.210 (30.73) 1.200 (30.48)
19	1.395 (35.43) 1.385 (35.18)	1.335 (33.91) 1.325 (33.65)
21	1.520 (38.61) 1.510 (38.35)	1.460 (37.08) 1.450 (36.83)
23	1.645 (41.78) 1.635 (41.53)	1.585 (40.26) 1.575 (40.00)
25	1.770 (44.96) 1.760 (44.70)	1.710 (43.43) 1.700 (43.18)

© 2022 Glenair, Inc • 1211 Air Way, Glendale, CA 91201 • 818-247-6000 • www.glenair.com • U.S. CAGE code 06324 • SuperNine® Catalog
Dimensions in Inches (millimeters) are subject to change without notice.

SuperNine® Glass seal hermetic

MIL-DTL-38999 Series III Type

233-262 PC tail receptacles with shielded contacts

233-262-H8 WELD MOUNT RECEPTACLE, D38999/21 TYPE

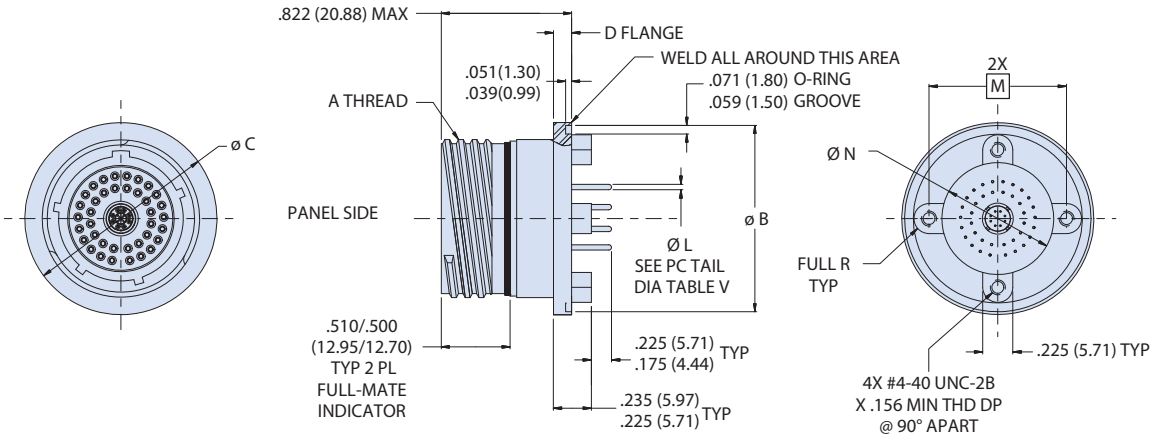

Weld Mount Receptacle Dimensions							
SHELL SIZE CODE	SHELL SIZE	A THREAD	ø B	ø C	D	M BSC	ø N
A	9	.6250-.1P-.3L-TS-2A	.941 (23.90) .929 (23.60)	.984 (24.99) .972 (24.69)	.134 (3.40) .118 (3.00)	.594 (15.09)	.340 (8.64)
B	11	.7500-.1P-.3L-TS-2A	1.063 (27.00) 1.051 (26.70)	1.106 (28.09) 1.094 (27.79)	.134 (3.40) .118 (3.00)	.719 (18.26)	.468 (11.89)
C	13	.8750-.1P-.3L-TS-2A	1.189 (30.20) 1.177 (29.90)	1.232 (31.29) 1.220 (30.99)	.134 (3.40) .118 (3.00)	.812 (20.62)	.572 (14.53)
D	15	1.0000-.1P-.3L-TS-2A	1.315 (33.40) 1.303 (33.10)	1.358 (34.49) 1.346 (34.19)	.134 (3.40) .118 (3.00)	.906 (23.01)	.705 (17.91)
E	17	1.1875-.1P-.3L-TS-2A	1.402 (35.61) 1.390 (35.31)	1.445 (36.70) 1.433 (36.40)	.134 (3.40) .118 (3.00)	1.030 (26.16)	.830 (21.08)
F	19	1.2500-.1P-.3L-TS-2A	1.547 (39.29) 1.535 (38.99)	1.591 (40.41) 1.579 (40.11)	.134 (3.40) .118 (3.00)	1.150 (29.21)	.934 (23.72)
G	21	1.3750-.1P-.3L-TS-2A	1.689 (42.90) 1.677 (42.60)	1.732 (43.99) 1.720 (43.69)	.134 (3.40) .118 (3.00)	1.221 (31.01)	1.055 (26.80)
H	23	1.5000-.1P-.3L-TS-2A	1.854 (47.09) 1.842 (46.79)	1.898 (48.21) 1.886 (47.90)	.165 (4.19) .149 (3.78)	1.360 (34.54)	1.160 (29.46)
J	25	1.6250-.1P-.3L-TS-2A	1.941 (49.30) 1.929 (49.00)	1.984 (50.39) 1.972 (50.09)	.165 (4.19) .149 (3.78)	1.475 (37.47)	1.307 (33.20)

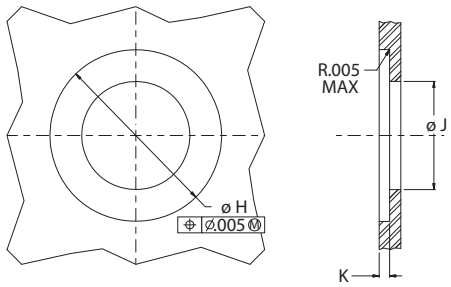

Weld Mount, Mounting Hole Dimensions			
SHELL SIZE	ø H	ø J ±.005	DEPTH K ±.005
9	.990 (25.15)/.985 (25.02)	.635 (16.13)	.126 (3.20)
11	1.112 (28.24)/1.107 (28.12)	.760 (19.30)	.126 (3.20)
13	1.238 (31.45)/1.233 (31.32)	.885 (22.48)	.126 (3.20)
15	1.364 (34.65)/1.359 (34.52)	1.010 (25.65)	.126 (3.20)
17	1.451 (36.86)/1.446 (36.73)	1.195 (30.35)	.126 (3.20)
19	1.597 (40.56)/1.592 (40.44)	1.260 (32.00)	.126 (3.20)
21	1.738 (44.15)/1.733 (44.02)	1.385 (35.18)	.126 (3.20)
23	1.894 (48.11)/1.899 (48.23)	1.510 (38.35)	.157 (3.99)
25	1.990 (50.55)/1.985 (50.42)	1.635 (41.53)	.157 (3.99)

© 2022 Glenair, Inc • 1211 Air Way, Glendale, CA 91201 • 818-247-6000 • www.glenair.com • U.S. CAGE code 06324 • SuperNine® Catalog
Dimensions in Inches (millimeters) are subject to change without notice.

SuperNine® Glass seal hermetic

MIL-DTL-38999 Series III Type

233-267 PC tail receptacles with threaded stand-off

Part Number Development						
Sample Part Number	**233-267**	**-H7**	**ZL**	**9-35**	**C**	**N**
Series / Basic Part No.	Series 23 SuperNine Hermetic					
Connector Style	**H7** = Jam-Nut Mount **DH7** = Dual O-ring, Jam-Nut Mount **H2** = Box Mount					
Finish*	**Z1** = CRES, Passivated **ZL** = CRES, Nickel Finish					
Shell Size/Insert Arrangement*	Per MIL-DTL-38999/MIL-STD-1560					
Contact Configuration	**C** = Pin, Feed-thru **D** = Socket, Feed-thru					
Polarization*	**A**, **B**, **C**, **D**, **E**, **N** = Normal					

***Refer to Section A for standard insert arrangements and pages D-8 thru D-10 for special shielded contact arrangements, consult factory for additional options**
Modification codes may be added directly to the end of any valid part number

Material/finish:

- Shell and jam-nut (H7 and DH7): 300 series CRES/per part number development
- Contacts, pin: nickel iron alloy/gold plated
- Contacts, socket: copper alloy/gold plated
- Insulator, pins: vitreous glass
- Insulator socket: high grade rigid dielectric
- Seals: fluorosilicone blend
- O-ring (jam-nut only): silver plated aluminum in fluorosilicone (cho-seal 1298 or equivalent)

Test Requirements

DWV Voltage Levels at Sea Level

Service rating	Voltage AC RMS 60HZ
M	1300 VAC
I	1800 VAC
II	2300 VAC
N	1000 VAC

I.R. - 5 Gigohms min. @ 500 VDC

Hermeticity - <1 x 10^-7 ccHe/sec @ 1 ATM, delta pressure

PC Tail Diameter	
Contact Size	**PC Tail ØL**
No 23	.020 (0.51) .018 (0.46)
No 22	.020 (0.51) .018 (0.46)
No 20	.030 (0.76) .028 (0.71)
No 16	.040 (1.02) .038 (0.97)
No 12	.072 (1.83) .070 (1.78)

NOTES

1. Glenair 233-267-DH7, H7 and H2 receptacle connectors are designed to meet or exceed the mechanical and dimensional requirements of MIL-DTL-38999, D38999/23, D38999/21and MIL-STD1560 except as shown and/or noted. Receptacle mates with any QPL manufacturer's MIL-DTL-38999, series III plug connector, D38999/26, having the same shell size, insert arrangement and polarization

© 2022 Glenair, Inc • 1211 Air Way, Glendale, CA 91201 • 818-247-6000 • www.glenair.com • U.S. CAGE code 06324 • SuperNine® Catalog
Dimensions in Inches (millimeters) are subject to change without notice.

SuperNine® Glass seal hermetic

MIL-DTL-38999 Series III Type

233-267 PC tail receptacles with threaded stand-off

233-267-H2 BOX MOUNT RECEPTACLE

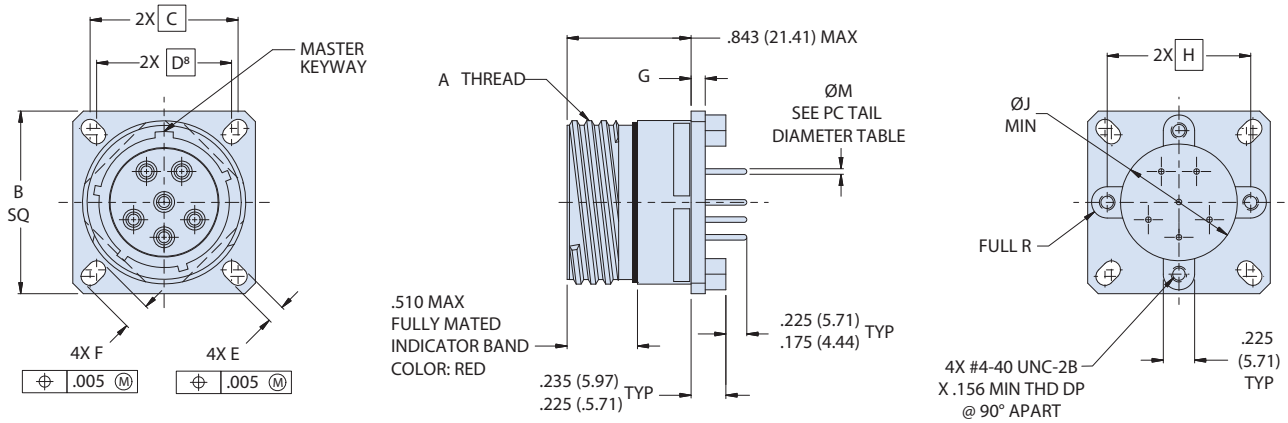

Dimensions										
SHELL SIZE CODE	SHELL SIZE	A THREAD 0.1P-0.3L-TS-2A	B SQ	C BSC	D BSC	E	F	G	H BSC	ØJ MIN
A	9	.6250	.948 (24.08) .925 (23.50)	.719 (18.26)	.594 (15.09)	.136 (3.45) .120 (3.05)	.224 (5.69) .208 (5.28)	.102 (2.59) .075 (1.90)	.594 (15.09)	.340 (8.64)
B	11	.7500	1.043 (26.49) 1.019 (25.88)	.812 (20.62)	.719 (18.26)		.202 (5.13) .186 (4.72)		.719 (18.26)	.468 (11.89)
C	13	.8750	1.137 (28.88) 1.114 (28.30)	.906 (23.01)	.812 (20.62)				.812 (20.62)	.572 (14.53)
D	15	1.0000	1.232 (31.29) 1.208 (30.68)	.969 (24.61)	.906 (23.01)		.181 (4.60) .165 (4.19)		.906 (23.01)	.705 (17.91)
E	17	1.1875	1.323 (33.60) 1.299 (32.99)	1.062 (26.97)	.969 (24.61)		.202 (5.13) .186 (4.72)		1.030 (26.16)	.830 (21.08)
F	19	1.2500	1.449 (36.80) 1.425 (36.20)	1.156 (29.36)	1.062 (26.97)				1.150 (29.21)	.934 (23.72)
G	21	1.3750	1.575 (40.00) 1.551 (39.40)	1.250 (31.75)	1.156 (29.36)				1.221 (31.01)	1.055 (26.80)
H	23	1.5000	1.701 (43.21) 1.677 (42.60)	1.375 (34.92)	1.250 (31.75)	.162 (4.11) .146 (3.71)	.250 (6.35) .234 (5.94)		1.360 (34.54)	1.160 (29.46)
J	25	1.6250	1.823 (46.30) 1.799 (45.69)	1.500 (38.10)	1.375 (34.92)				1.475 (37.47)	1.307 (33.20)

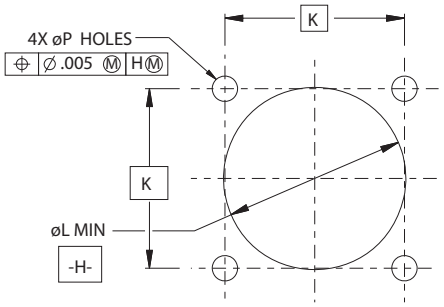

BACK PANEL MOUNTING
RECOMMENDED MOUNTING HOLES FOR BOX MOUNT RECEPTACLES

Box Mount, Mounting Hole Dimensions				
SHELL SIZE CODE	SHELL SIZE	K BSC	ø L MIN	ø P HOLES
A	9	.719 (18.26)	.656 (16.66)	.133 (3.38) .123 (3.12)
B	11	.812 (20.62)	.781 (19.84)	
C	13	.906 (23.01)	.921 (23.39)	
D	15	.969 (24.61)	1.047 (26.59)	
E	17	1.062 (26.97)	1.218 (30.94)	
F	19	1.156 (29.36)	1.296 (32.92)	
G	21	1.250 (31.75)	1.421 (36.09)	
H	23	1.375 (34.92)	1.546 (39.27)	.159 (4.04) .149 (3.78)
J	25	1.500 (38.10)	1.672 (42.47)	

© 2022 Glenair, Inc • 1211 Air Way, Glendale, CA 91201 • 818-247-6000 • www.glenair.com • U.S. CAGE code 06324 • SuperNine® Catalog
Dimensions in Inches (millimeters) are subject to change without notice.

SuperNine® Glass seal hermetic

MIL-DTL-38999 Series III Type

233-267 PC tail receptacles with threaded stand-off

233-267-H7 JAM-NUT RECEPTACLE

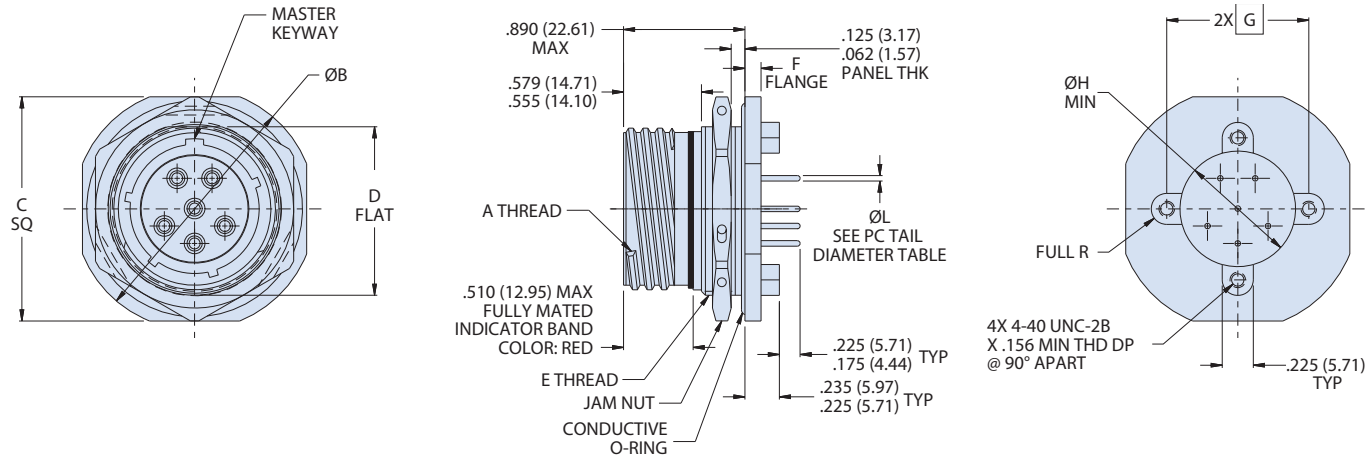

Dimensions									
SHELL SIZE CODE	SHELL SIZE	A THREAD .1P-.3L-TS-2A	ØB	C SQ	D FLAT	E THREAD ISO METRIC	F	G BSC	ØH MIN
A	9	.6250	1.200 (30.48) 1.178 (29.92)	1.078 (27.38) 1.048 (26.62)	.654 (16.61) .645 (16.38)	M17 X 1.0-6g	.122 (3.10) .083 (2.11)	.594 (15.09)	.340 (8.64)
B	11	.7500	1.386 (35.20) 1.362 (34.59)	1.268 (32.21) 1.236 (31.39)	.755 (19.18) .745 (18.92)	M20 X 1.0-6g		.719 (18.26)	.468 (11.89)
C	13	.8750	1.512 (38.40) 1.488 (37.80)	1.390 (35.31) 1.358 (34.49)	.942 (23.93) .932 (23.67)	M25 X 1.0-6g		.812 (20.62)	.572 (14.53)
D	15	1.0000	1.638 (41.61) 1.614 (41.00)	1.516 (38.51) 1.484 (37.69)	1.066 (27.08) 1.056 (26.82)	M28 X 1.0-6g		.906 (23.01)	.705 (17.91)
E	17	1.1875	1.764 (44.81) 1.740 (44.20)	1.642 (41.71) 1.610 (40.89)	1.191 (30.25) 1.181 (30.00)	M32 X 1.0-6g		1.030 (26.16)	.830 (21.08)
F	19	1.2500	1.949 (49.50) 1.925 (48.90)	1.827 (46.41) 1.795 (45.59)	1.316 (33.43) 1.306 (33.17)	M35 X 1.0-6g	.153 (3.89) .114 (2.90)	1.150 (29.21)	.934 (23.72)
G	21	1.3750	2.075 (52.71) 2.051 (52.10)	1.953 (49.61) 1.921 (48.79)	1.441 (36.60) 1.431 (36.35)	M38 X 1.0-6g		1.221 (31.01)	1.055 (26.80)
H	23	1.5000	2.201 (55.91) 2.177 (55.30)	2.079 (52.81) 2.047 (51.99)	1.566 (39.78) 1.556 (39.52)	M41 X 1.0-6g		1.360 (34.54)	1.160 (29.46)
J	25	1.6250	2.323 (59.00) 2.299 (58.39)	2.205 (56.01) 2.173 (55.19)	1.691 (42.95) 1.681 (42.70)	M44 X 1.0-6g		1.475 (37.47)	1.307 (33.20)

Jam-Nut and Dual O-ring Jam-Nut Panel Cut-Out Dimensions			
SHELL SIZE CODE	SHELL SIZE	ØJ	K FLAT
A	9	.703 (17.86); .693 (17.60)	.661 (16.79); .655 (16.64)
B	11	.835 (21.21); .825 (20.96)	.771 (19.58); .761 (19.33)
C	13	1.020 (25.91); 1.010 (25.65)	.955 (24.26); .945 (24.00)
D	15	1.145 (29.08); 1.135 (28.83)	1.085 (27.56); 1.075 (27.30)
E	17	1.270 (32.26); 1.260 (32.00)	1.210 (30.73); 1.200 (30.48)
F	19	1.395 (35.43); 1.385 (35.18)	1.335 (33.91); 1.325 (33.65)
G	21	1.520 (38.61); 1.510 (38.35)	1.460 (37.08); 1.450 (36.83)
H	23	1.645 (41.78); 1.635 (41.53)	1.585 (40.26); 1.575 (40.00)
J	25	1.770 (44.96); 1.760 (44.70)	1.710 (43.43); 1.700 (43.18)

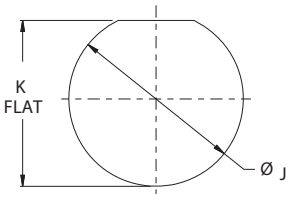

RECOMMENDED PANEL CUT-OUT

© 2022 Glenair, Inc • 1211 Air Way, Glendale, CA 91201 • 818-247-6000 • www.glenair.com • U.S. CAGE code 06324 • SuperNine® Catalog
Dimensions in Inches (millimeters) are subject to change without notice.

SuperNine® Glass seal hermetic

MIL-DTL-38999 Series III Type

233-267 PC tail receptacles with threaded stand-off

233-267-DH7 DUAL O-RING JAM-NUT RECEPTACLE

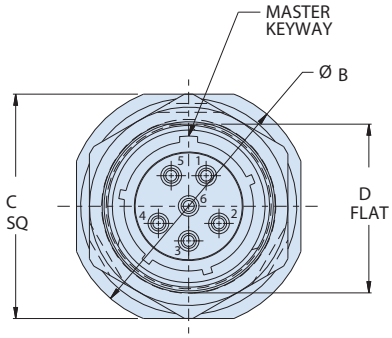

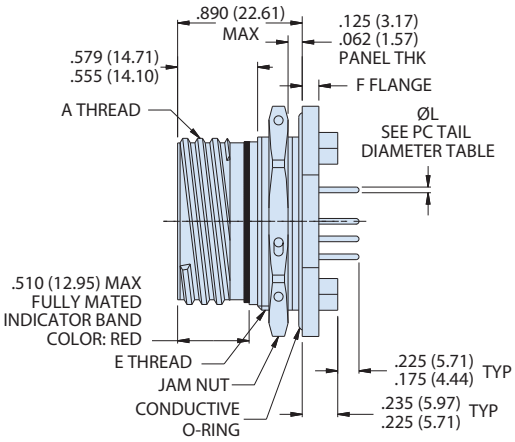

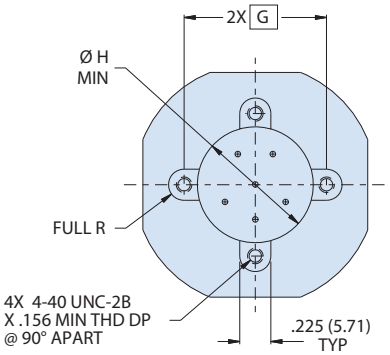

Dimensions									
SHELL SIZE CODE	SHELL SIZE	A THREAD .1P-.3L-TS-2A	ØB	C SQ	D FLAT	E THREAD ISO METRIC	F	G BSC	ØH MIN
A	9	.6250 -	1.500 (38.10)	1.375 (34.92)	.654 (16.61) .645 (16.38)	M17 X 1.0-6g	.122 (3.10) .083 (2.11)	.594 (15.09)	.340 (8.64)
B	11	.7500	1.625 (41.28)	1.500 (38.10)	.755 (19.18) .745 (18.92)	M20 X 1.0-6g		.719 (18.26)	.468 (11.89)
C	13	.8750	1.752 (44.50)	1.626 (41.30)	.942 (23.93) .932 (23.67)	M25 X 1.0-6g		.812 (20.62)	.572 (14.53)
D	15	1.0000	1.937 (49.20)	1.811 (46.00)	1.066 (27.08) 1.056 (26.82)	M28 X 1.0-6g		.906 (23.01)	.705 (17.91)
E	17	1.1875	2.063 (52.40)	1.937 (49.20)	1.191 (30.25) 1.181 (30.00)	M32 X 1.0-6g		1.030 (26.16)	.830 (21.08)
F	19	1.2500	2.189 (55.60)	2.063 (52.40)	1.316 (33.43) 1.306 (33.17)	M35 X 1.0-6g	.153 (3.89) .114 (2.90)	1.150 (29.21)	.934 (23.72)
G	21	1.3750	2.311 (58.70)	2.189 (55.60)	1.441 (36.60) 1.431 (36.35)	M38 X 1.0-6g		1.221 (31.01)	1.055 (26.80)
H	23	1.5000	2.500 (63.50)	2.300 (58.42)	1.566 (39.78) 1.556 (39.52)	M41 X 1.0-6g		1.360 (34.54)	1.160 (29.46)
J	25	1.6250	2.625 (66.68)	2.400 (60.96)	1.691 (42.95) 1.681 (42.70)	M44 X 1.0-6g		1.475 (37.47)	1.307 (33.20)

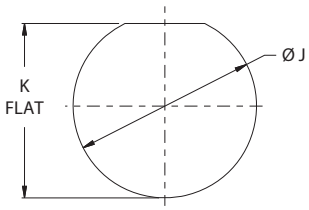

RECOMMENDED PANEL CUT-OUT

Jam-Nut and Dual O-ring Jam-Nut Panel Cut-Out Dimensions			
SHELL SIZE CODE	SHELL SIZE	ØJ	K FLAT
A	9	.703 (17.86); .693 (17.60)	.661 (16.79); .655 (16.64)
B	11	.835 (21.21); .825 (20.96)	.771 (19.58); .761 (19.33)
C	13	1.020 (25.91); 1.010 (25.65)	.955 (24.26); .945 (24.00)
D	15	1.145 (29.08); 1.135 (28.83)	1.085 (27.56); 1.075 (27.30)
E	17	1.270 (32.26); 1.260 (32.00)	1.210 (30.73); 1.200 (30.48)
F	19	1.395 (35.43); 1.385 (35.18)	1.335 (33.91); 1.325 (33.65)
G	21	1.520 (38.61); 1.510 (38.35)	1.460 (37.08); 1.450 (36.83)
H	23	1.645 (41.78); 1.635 (41.53)	1.585 (40.26); 1.575 (40.00)
J	25	1.770 (44.96); 1.760 (44.70)	1.710 (43.43); 1.700 (43.18)

© 2022 Glenair, Inc • 1211 Air Way, Glendale, CA 91201 • 818-247-6000 • www.glenair.com • U.S. CAGE code 06324 • SuperNine® Catalog
Dimensions in Inches (millimeters) are subject to change without notice.

SuperNine® Glass seal hermetic

MIL-DTL-38999 Series III Type

233-268 Dual flange receptacles, high-speed PCB contacts

Part Number Development						
Sample Part Number	**233-268**	**-H2**	**ZL**	**09-35**	**C**	**N**
Series / Basic Part No.	Series 23 SuperNine Hermetic					
Connector Style	**H2** = Box Mount **H7** = Jam-Nut Mount **DH7** = Dual O-ring, Jam-Nut Mount					
Finish*	**Z1** = CRES, Passivated **ZL** = CRES, Nickel Finish					
Shell Size/Insert Arrangement*	Per MIL-DTL-38999/MIL-STD-1560					
Contact Configuration	**C** = Pin, Feed-thru **D** = Socket, Feed-thru					
Polarization*	**A**, **B**, **C**, **D**, **E**, **N** = Normal					

***Refer to Section A for complete details, consult factory for additional options**
Modification codes may be added directly to the end of any valid part number

Material/finish:

- Shell and jam-nut (H7 and DH7 only): 300 series CRES/per part number development
- Contacts, pin: nickel-iron alloy/gold plate
- Contacts, socket: copper alloy/gold plate
- Insulator, pins: vitreous glass/N.A.
- Insulator, sockets: high-grade rigid dielectric/N.A.
- Seals: fluorosilicone blend/N.A.
  O-ring (jam-nut only): silver plated aluminum in fluorosilicone (cho-seal 1298 or equivalent)

Test Requirements

DWV Voltage Levels at Sea Level

Service rating	Voltage AC RMS 60HZ
M	1300 VAC
I	1800 VAC
II	2300 VAC
N	1000 VAC

I.R. - 5 Gigohms min. @ 500 VDC

Hermeticity - <1 x 10^-7 ccHe/sec @ 1 ATM, delta pressure

PC Tail Diameter	
Contact Size	**PC Tail ØL**
No 23	.020 (0.51) .018 (0.46)
No 22	.020 (0.51) .018 (0.46)
No 20	.030 (0.76) .028 (0.71)
No 16	.040 (1.02) .038 (0.97)
No 12	.072 (1.83) .070 (1.78)

NOTES

1. Insert arrangements per MIL-STD-1560. Contact manufacturer for additional arrangement options
2. Glenair 233-268-H7 and DH7 receptacle connectors are designed to meet or exceed the mechanical and dimensional requirements of MIL-DTL-38999, D38999/23, and MIL-STD-1560 except as shown and/or noted.
3. Glenair receptacle connector is designed to meet or exceed the mechanical and dimensional requirements of MIL-DTL-38999, D38999/21, and MIL-STD-1560 except as shown and/or noted.
4. Rear panel mount only
5. Mates with 233-217 or 233-224 plug

© 2022 Glenair, Inc • 1211 Air Way, Glendale, CA 91201 • 818-247-6000 • www.glenair.com • U.S. CAGE code 06324 • SuperNine® Catalog

Dimensions in Inches (millimeters) are subject to change without notice.

SuperNine® Glass seal hermetic

MIL-DTL-38999 Series III Type

233-268 Dual flange receptacles, high-speed PCB contacts

233-268-H2 BOX MOUNT RECEPTACLE

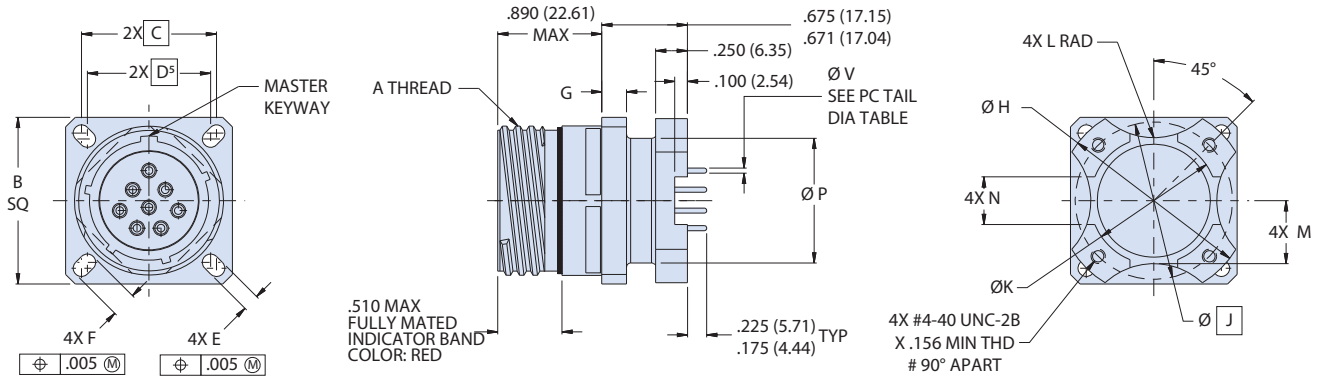

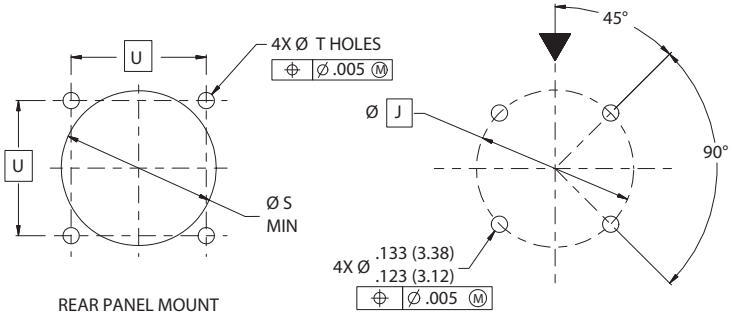

REAR PANEL MOUNT
RECOMMENDED MOUNTING HOLES FOR WALL MOUNT RECEPTACLES

RECOMMENDED PCB MOUNTING HOLE LOCATIONS

Box Mount, Mounting Hole Dimensions				
SHELL SIZE CODE	SHELL SIZE	ØS MIN	Ø T HOLES ±.050	U BSC
A	9	.656 (16.66)	.128 (3.25)	.719 (18.26)
B	11	.796 (20.22)		.812 (20.62)
C	13	.922 (23.42)		.906 (23.01)
D	15	1.047 (26.59)		.969 (24.61)
E	17	1.219 (30.96)		1.062 (26.97)
F	19	1.297 (32.94)		1.156 (29.36)
G	21	1.422 (36.12)		1.250 (31.75)
H	23	1.547 (39.29)	.154 (3.91)	1.375 (34.92)
J	25	1.672 (42.47)	.150 (3.81)	1.500 (38.10)

Box Mount Dimensions															
SHELL SIZE CODE	SHELL SIZE	A THREAD 0.1P-0.3L-TS-2A	B SQ	C BSC	D5 BSC	E	F	G	ØH ±.005	ØJ BSC	ØK ±.005	L RAD ±.020	M ±.020	N ±.010	ØP ±.005
A	9	.6250 -	.948 (24.08) .925 (23.50)	.719 (18.26)	.594 (15.09)	.136 (3.45) .120 (3.05)	.224 (5.69) .208 (5.28)	.102 (2.59) .075 (1.90)	1.016 (25.81)	.752 (19.10)	.532 (13.51)	.225 (5.72)	.275 (6.99)	.225 (5.72)	.535 (13.59)
B	11	.7500	1.043 (26.49) 1.019 (25.88)	.812 (20.62)	.719 (18.26)		.202 (5.13) .186 (4.72)		1.062 (26.97)	.850 (21.59)	.595 (15.11)	.250 (6.35)	.290 (7.37)	.250 (6.35)	.560 (14.22)
C	13	.8750	1.137 (28.88) 1.114 (28.30)	.906 (23.01)	.812 (20.62)				1.250 (31.75)	.994 (25.25)	.720 (18.29)	.375 (9.52)	.370 (9.40)	.250 (6.35)	.700 (17.78)
D	15	1.0000	1.232 (31.29) 1.208 (30.68)	.969 (24.61)	.906 (23.01)		.181 (4.60) .165 (4.19)		1.375 (34.92)	1.119 (28.42)	.843 (21.41)	.438 (11.13)	.440 (11.18)	.325 (8.25)	.857 (21.77)
E	17	1.1875	1.323 (33.60) 1.299 (32.99)	1.062 (26.97)	.969 (24.61)				1.500 (38.10)	1.237 (31.42)	1.000 (25.40)	.562 (14.27)	.495 (12.57)	.375 (9.52)	.980 (24.89)
F	19	1.2500	1.449 (36.80) 1.425 (36.20)	1.156 (29.36)	1.062 (26.97)		.202 (5.13) .186 (4.72)		1.625 (41.28)	1.379 (35.03)	1.125 (28.58)	.875 (22.23)	.540 (13.72)	.500 (12.70)	1.060 (26.92)
G	21	1.3750	1.575 (40.00) 1.551 (39.40)	1.250 (31.75)	1.156 (29.36)				1.750 (44.45)	1.489 (37.82)	1.240 (31.50)	1.170 (29.72)	.625 (15.88)	.562 (14.27)	1.210 (30.73)
H	23	1.5000	1.701 (43.21) 1.677 (42.60)	1.375 (34.92)	1.250 (31.75)	.162 (4.11) .146 (3.71)	.250 (6.35) .234 (5.94)		1.875 (47.63)	1.619 (41.12)	1.328 (33.73)	1.250 (31.75)	.660 (16.76)	.688 (17.48)	1.310 (33.27)
J	25	1.6250	1.823 (46.30) 1.799 (45.69)	1.500 (38.10)	1.375 (34.92)				2.000 (50.80)	1.744 (44.30)	1.453 (36.91)	1.375 (34.92)	.740 (18.80)	.750 (19.05)	1.460 (37.08)

© 2022 Glenair, Inc • 1211 Air Way, Glendale, CA 91201 • 818-247-6000 • www.glenair.com • U.S. CAGE code 06324 • SuperNine® Catalog
Dimensions in Inches (millimeters) are subject to change without notice.

SuperNine® Glass seal hermetic

MIL-DTL-38999 Series III Type

233-268 Dual flange receptacles, high-speed PCB contacts

233-268-H7 AND 233-268-DH7 JAM-NUT MOUNT RECEPTACLE

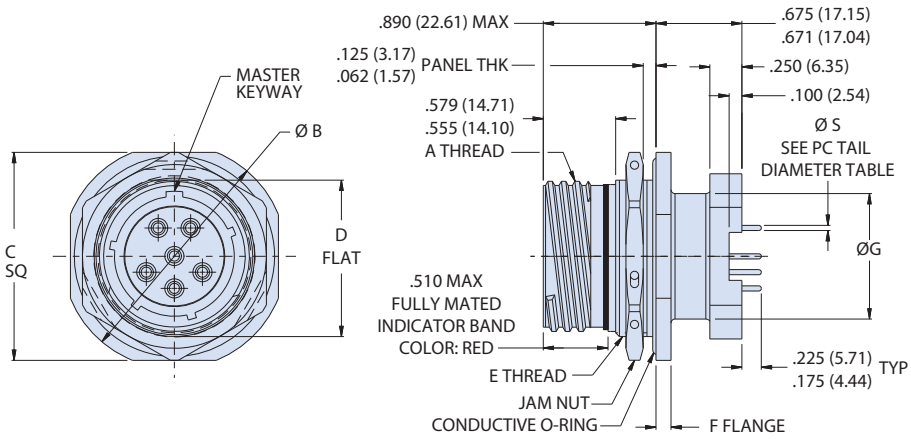

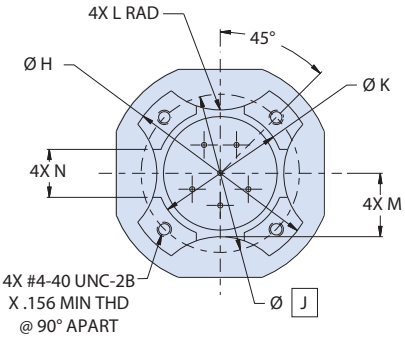

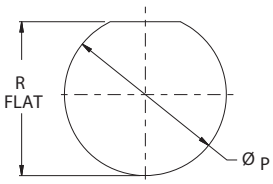

RECOMMENDED PANEL CUT-OUT

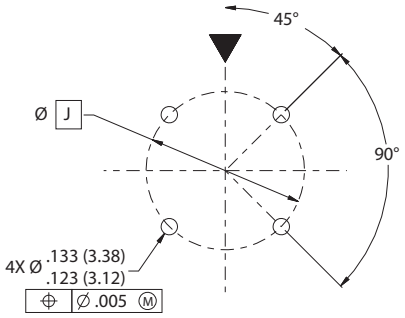

RECOMMENDED PCB
MOUNTING HOLE LOCATIONS

Mounting Hole Dimensions for H7 and DH7							
SHELL SIZE CODE	SHELL SIZE	ØP	R FLAT	SHELL SIZE CODE	SHELL SIZE	ØP	R FLAT
A	9	.703 (17.86) .693 (17.60)	.661 (16.79) .655 (16.64)	F	19	1.395 (35.43) 1.385 (35.18)	1.335 (33.91) 1.325 (33.65)
B	11	.835 (21.21) .825 (20.96)	.771 (19.58) .761 (19.33)	G	21	1.520 (38.61) 1.510 (38.35)	1.460 (37.08) 1.450 (36.83)
C	13	1.020 (25.91) 1.010 (25.65)	.955 (24.26) .945 (24.00)	H	23	1.645 (41.78) 1.635 (41.53)	1.585 (40.26) 1.575 (40.00)
D	15	1.145 (29.08) 1.135 (28.83)	1.085 (27.56) 1.075 (27.30)	J	25	1.770 (44.96) 1.760 (44.70)	1.710 (43.43) 1.700 (43.18)
E	17	1.270 (32.26) 1.260 (32.00)	1.210 (30.73) 1.200 (30.48)				

© 2022 Glenair, Inc • 1211 Air Way, Glendale, CA 91201 • 818-247-6000 • www.glenair.com • U.S. CAGE code 06324 • SuperNine® Catalog
Dimensions in Inches (millimeters) are subject to change without notice.

SuperNine® Glass seal hermetic

MIL-DTL-38999 Series III Type

233-268 Dual flange receptacles, high-speed PCB contacts

233-268-H7 JAM-NUT MOUNT RECEPTACLE

Dimensions														
SHELL SIZE CODE	SHELL SIZE	A THREAD 0.1P-0.3L-TS-2A	ØB	C SQ	D FLAT	E THREAD ISO METRIC 1.0-6g 0.100R	F	ØG ±.005	ØH ±.005	ØJ BSC	ØK ±.005	L RAD ±.020	M ±.020	N ±.010
A	9	.6250	1.200 (30.48) 1.178 (29.92)	1.078 (27.38) 1.048 (26.62)	0.654 (16.61) 0.645 (16.38)	M17	.122 (3.10) .083 (2.11)	.535 (13.59)	1.016 (25.81)	.752 (19.10)	.532 (13.51)	.225 (5.72)	.275 (6.99)	.225 (5.72)
B	11	.7500	1.386 (35.20) 1.362 (34.59)	1.268 (32.21) 1.236 (31.39)	0.755 (19.18) 0.745 (18.92)	M20		.560 (14.22)	1.062 (26.97)	.850 (21.59)	.595 (15.11)	.250 (6.35)	.290 (7.37)	.250 (6.35)
C	13	.8750	1.512 (38.40) 1.488 (37.80)	1.390 (35.31) 1.358 (34.49)	0.942 (23.93) 0.932 (23.67)	M25		.700 (17.78)	1.250 (31.75)	.994 (25.25)	.720 (18.29)	.375 (9.52)	.370 (9.40)	.250 (6.35)
D	15	1.0000-	1.638 (41.61) 1.614 (41.00)	1.516 (38.51) 1.484 (37.69)	1.066 (27.08) 1.056 (26.82)	M28		.857 (21.77)	1.375 (34.92)	1.119 (28.42)	.843 (21.41)	.438 (11.13)	.440 (11.18)	.325 (8.25)
E	17	1.1875	1.764 (44.81) 1.740 (44.20)	1.642 (41.71) 1.610 (40.89)	1.191 (30.25) 1.181 (30.00)	M32		.980 (24.89)	1.500 (38.10)	1.237 (31.42)	1.000 (25.40)	.562 (14.27)	.495 (12.57)	.375 (9.52)
F	19	1.2500	1.949 (49.50) 1.925 (48.90)	1.827 (46.41) 1.795 (45.59)	1.316 (33.43) 1.306 (33.17)	M35	.153 (3.89) .114 (2.90)	1.060 (26.92)	1.625 (41.28)	1.379 (35.03)	1.125 (28.58)	.875 (22.23)	.540 (13.72)	.500 (12.70)
G	21	1.3750	2.075 (52.71) 2.051 (52.10)	1.953 (49.61) 1.921 (48.79)	1.441 (36.60) 1.431 (36.35)	M38		1.210 (30.73)	1.750 (44.45)	1.489 (37.82)	1.240 (31.50)	1.170 (29.72)	.625 (15.88)	.562 (14.27)
H	23	1.5000	2.201 (55.91) 2.177 (55.30)	2.079 (52.81) 2.047 (51.99)	1.566 (39.78) 1.556 (39.52)	M41		1.310 (33.27)	1.875 (47.63)	1.619 (41.12)	1.328 (33.73)	1.250 (31.75)	.660 (16.76)	.688 (17.48)
J	25	1.6250	2.323 (59.00) 2.299 (58.39)	2.205 (56.01) 2.173 (55.19)	1.691 (42.95) 1.681 (42.70)	M44		1.460 (37.08)	2.000 (50.80)	1.744 (44.30)	1.453 (36.91)	1.375 (34.92)	.740 (18.80)	.750 (19.05)

233-268-DH7 DUAL O-RING, JAM-NUT MOUNT RECEPTACLE

Dimensions														
SHELL SIZE CODE	SHELL SIZE	A THREAD 0.1P-0.3L-TS-2A	ØB	C SQ	D FLAT	E THREAD ISO METRIC 1.0-6g 0.100R	F	ØG ±.005	ØH ±.005	ØJ BSC	ØK ±.005	L RAD ±.020	M ±.020	N ±.010
A	9	.6250	1.500 (38.10)	1.375 (34.92)	0.654 (16.61) 0.645 (16.38)	M17	.122 (3.10) .083 (2.11)	.535 (13.59)	1.016 (25.81)	.752 (19.10)	.532 (13.51)	.225 (5.72)	.275 (6.99)	.225 (5.72)
B	11	.7500	1.625 (41.28)	1.500 (38.10)	0.755 (19.18) 0.745 (18.92)	M20		.560 (14.22)	1.062 (26.97)	.850 (21.59)	.595 (15.11)	.250 (6.35)	.290 (7.37)	.250 (6.35)
C	13	.8750	1.752 (44.50)	1.626 (41.30)	0.942 (23.93) 0.932 (23.67)	M25		.700 (17.78)	1.250 (31.75)	.994 (25.25)	.720 (18.29)	.375 (9.52)	.370 (9.40)	.250 (6.35)
D	15	1.0000-	1.937 (49.20)	1.811 (46.00)	1.066 (27.08) 1.056 (26.82)	M28		.857 (21.77)	1.375 (34.92)	1.119 (28.42)	.843 (21.41)	.438 (11.13)	.440 (11.18)	.325 (8.25)
E	17	1.1875	2.063 (52.40)	1.937 (49.20)	1.191 (30.25) 1.181 (30.00)	M32		.980 (24.89)	1.500 (38.10)	1.237 (31.42)	1.000 (25.40)	.562 (14.27)	.495 (12.57)	.375 (9.52)
F	19	1.2500	2.189 (55.60)	2.063 (52.40)	1.316 (33.43) 1.306 (33.17)	M35	.153 (3.89) .114 (2.90)	1.060 (26.92)	1.625 (41.28)	1.379 (35.03)	1.125 (28.58)	.875 (22.23)	.540 (13.72)	.500 (12.70)
G	21	1.3750	2.311 (58.70)	2.189 (55.60)	1.441 (36.60) 1.431 (36.35)	M38		1.210 (30.73)	1.750 (44.45)	1.489 (37.82)	1.240 (31.50)	1.170 (29.72)	.625 (15.88)	.562 (14.27)
H	23	1.5000	2.500 (63.50)	2.300 (58.42)	1.566 (39.78) 1.556 (39.52)	M41		1.310 (33.27)	1.875 (47.63)	1.619 (41.12)	1.328 (33.73)	1.250 (31.75)	.660 (16.76)	.688 (17.48)
J	25	1.6250	2.625 (66.68)	2.400 (60.96)	1.691 (42.95) 1.681 (42.70)	M44		1.460 (37.08)	2.000 (50.80)	1.744 (44.30)	1.453 (36.91)	1.375 (34.92)	.740 (18.80)	.750 (19.05)

© 2022 Glenair, Inc • 1211 Air Way, Glendale, CA 91201 • 818-247-6000 • www.glenair.com • U.S. CAGE code 06324 • SuperNine® Catalog
Dimensions in Inches (millimeters) are subject to change without notice.

SuperNine® Glass seal hermetic

MIL-DTL-38999 Series III Type

233-271 Hermetic receptacle with thermocouple contacts

Part Number Development									
Sample Part Number	**233-271**	**-H2**	**Z1**	**11**	**-98**	**P**	**N**	**-K**	**1**
Series / Basic Part No.	Series 23 SuperNine Receptacle								
Connector Style	**H2** = Flange Mount **H5** = Solder Mount **H7** = Jam-Nut Mount **H8** = Weld Mount								
Finish*	**Z1** = CRES, Passivated **ZL** = CRES, Nickel Finish								
Shell Size	Per MIL-DTL-38999								
Arrangement	Per MIL-STD-1560								
Contact Style	**C** = Pin, PC Tail **P** = Pin, Solder Cup **X** = Pin, Eyelet								
Polarization*	**A**, **B**, **C**, **D**, **E**, **N** = Normal; see section A for key position details								
Thermocouple Type	**E**, **J**, **K**, **T** only								
Pairs of T/C	See note 4								

Contact Size

Contact Size	Ø P
23	.015 (0.38) .011 (0.28)
22D	.015 (0.38) .011 (0.28)
20	.028 (0.71) .024 (0.61)
16	.0635 (1.61) .0615 (1.56)
12	.095 (2.41) .093 (2.36)

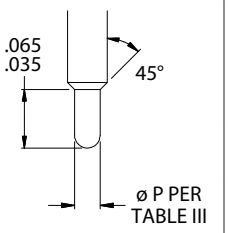

DWV Voltage Levels at Sea Level

Service Rating	Voltage AC RMS 60Hz
M	1300 VAC
I	1800 VAC
II	2300 VAC
N	1000 VAC

Contact Types

T/C Types	Positive Legs	Negative Legs	Application Range (°F)
E	Chromel	Constantan	200° to 1650°
J	Iron	Constantan	200° to 1400°
K	Chromel	Alumel	200° to 2300°
T	Copper	Constantan	-330° to 660°

Material/Finish

- Shell and jam-nut:
  Z1 = 300 Series CRES/Passivated,
  ZL = 300 Series CRES/nickel plated
- Contact, pins thermocouple = per P/N development
  JP = cadmium; TP = gold flash; balance=none
  balance = nickel alloy/gold plated
- Insulator, hermetic = Fused vitreous glass/none
- Insulator, socket: rigid dielectric/none
- Seals & o-rings: fluorosilicone/none

NOTES

1. Hermeticity: <1 x 10^-7 ccHe/sec @ 1 atmosphere delta pressure
2. IR: 5000 MegOhms min @ 500 VDC
3. DWV: per DWV Voltage Levels at Sea Level table
4. All thermocouple contact pairs will begin at contact #1 (A) as "+", and 2 (B) as "-". Each additional pair of thermocouple contacts will repeat sequentailly I.E.: 1&2 (A&B); 3&4 (C&D), etc
5. Application range is for thermocouple, not the connector. Connector temp range is -85 to 392°F

© 2022 Glenair, Inc • 1211 Air Way, Glendale, CA 91201 • 818-247-6000 • www.glenair.com • U.S. CAGE code 06324 • SuperNine® Catalog
Dimensions in Inches (millimeters) are subject to change without notice.

Rev. 06.15.22

SuperNine® Glass seal hermetic

MIL-DTL-38999 Series III Type

233-271 Hermetic receptacle with thermocouple contacts

233-271-H2 FLANGE MOUNT RECEPTACLE

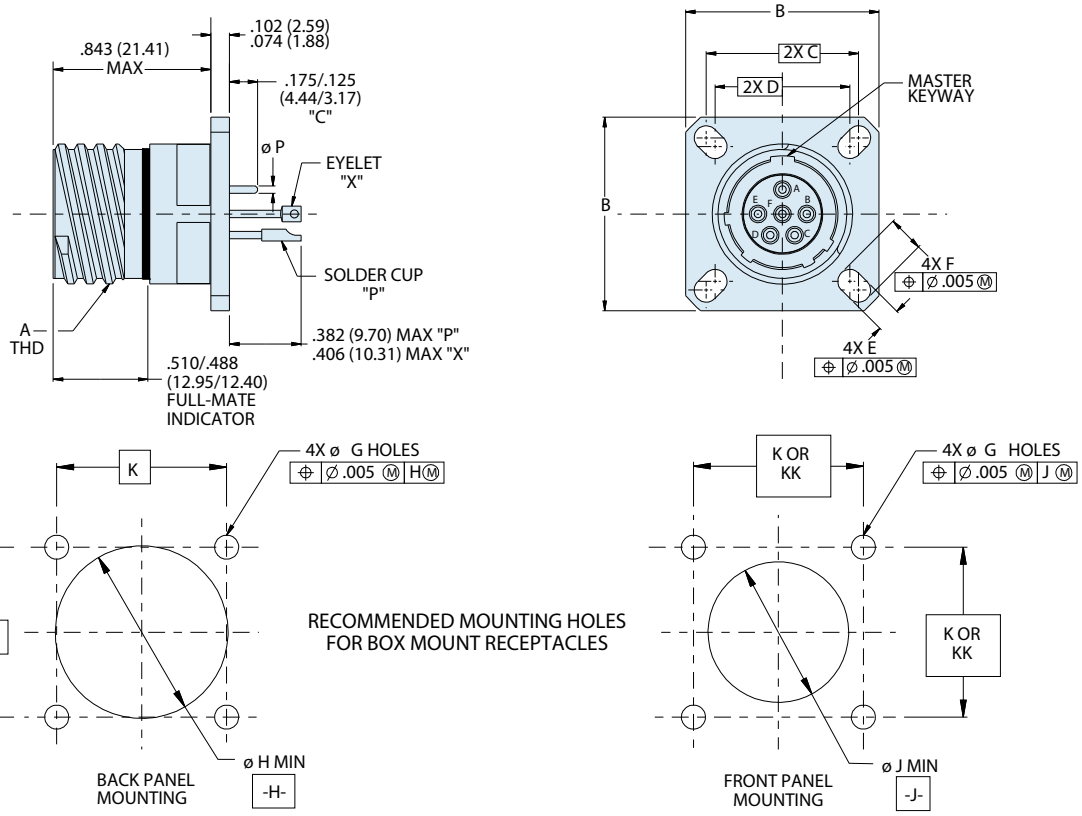

Flange Mount Feed-Thru Dimensions												
SHELL SIZE CODE	SHELL SIZE	A THREAD	B SQ	C BSC	D BSC	E	F	ø H MIN	ø J MIN	ø G HOLES	K BSC	KK BSC
A	9	.6250-.1P-.3L-TS-2A	0.949 (24.10) 0.925 (23.50)	0.719 (18.26)	0.594 (15.09)	0.136 (3.45) 0.120 (3.05)	0.224 (5.69) 0.208 (5.28)	0.656 (16.66)	0.516 (13.11)	0.133 (3.38) 0.123 (3.12)	0.719 (18.26)	0.594 (15.09)
B	11	.7500-.1P-.3L-TS-2A	1.043 (26.49) 1.019 (25.88)	0.812 (20.62)	0.719 (18.26)	0.136 (3.45) 0.120 (3.05)	0.202 (5.13) 0.186 (4.72)	0.781 (19.84)	0.625 (15.88)	0.133 (3.38) 0.123 (3.12)	0.812 (20.62)	0.719 (18.26)
C	13	.8750-.1P-.3L-TS-2A	1.138 (28.91) 1.114 (28.30)	0.906 (23.01)	0.812 (20.62)	0.136 (3.45) 0.120 (3.05)	0.202 (5.13) 0.186 (4.72)	0.921 (23.39)	0.750 (19.05)	0.133 (3.38) 0.123 (3.12)	0.906 (23.01)	0.812 (20.62)
D	15	1.0000-.1P-.3L-TS-2A	1.232 (31.29) 1.208 (30.68)	0.969 (24.61)	0.906 (23.01)	0.136 (3.45) 0.120 (3.05)	0.181 (4.60) 0.165 (4.19)	1.047 (26.59)	0.906 (23.01)	0.133 (3.38) 0.123 (3.12)	0.969 (24.61)	0.906 (23.01)
E	17	1.1875-.1P-.3L-TS-2A	1.323 (33.60) 1.299 (32.99)	1.062 (26.97)	0.969 (24.61)	0.136 (3.45) 0.120 (3.05)	0.202 (5.13) 0.186 (4.72)	1.218 (30.94)	1.016 (25.81)	0.133 (3.38) 0.123 (3.12)	1.062 (26.97)	0.969 (24.61)
F	19	1.2500-.1P-.3L-TS-2A	1.449 (36.80) 1.425 (36.20)	1.156 (29.36)	1.062 (26.97)	0.136 (3.45) 0.120 (3.05)	0.202 (5.13) 0.186 (4.72)	1.296 (32.92)	1.142 (29.01)	0.133 (3.38) 0.123 (3.12)	1.156 (29.36)	1.062 (26.97)
G	21	1.3750-.1P-.3L-TS-2A	1.575 (40.00) 1.551 (39.40)	1.250 (31.75)	1.156 (29.36)	0.136 (3.45) 0.120 (3.05)	0.202 (5.13) 0.186 (4.72)	1.421 (36.09)	1.266 (32.16)	0.133 (3.38) 0.123 (3.12)	1.250 (31.75)	1.156 (29.36)
H	23	1.5000-.1P-.3L-TS-2A	1.701 (43.21) 1.677 (42.60)	1.375 (34.92)	1.250 (31.75)	0.162 (4.11) 0.146 (3.71)	0.250 (6.35) 0.234 (5.94)	1.546 (39.27)	1.375 (34.92)	0.159 (4.04) 0.149 (3.78)	1.375 (34.92)	1.250 (31.75)
J	25	1.6250-.1P-.3L-TS-2A	1.823 (46.30) 1.799 (45.69)	1.500 (38.10)	1.375 (34.92)	0.162 (4.11) 0.146 (3.71)	0.250 (6.35) 0.234 (5.94)	1.672 (42.47)	1.484 (37.69)	0.159 (4.04) 0.149 (3.78)	1.500 (38.10)	1.375 (34.92)

© 2022 Glenair, Inc • 1211 Air Way, Glendale, CA 91201 • 818-247-6000 • www.glenair.com • U.S. CAGE code 06324 • SuperNine® Catalog
Dimensions in Inches (millimeters) are subject to change without notice.

SuperNine® Glass seal hermetic

MIL-DTL-38999 Series III Type

233-271 Hermetic receptacle with thermocouple contacts

233-271-H5 SOLDER MOUNT RECEPTACLE

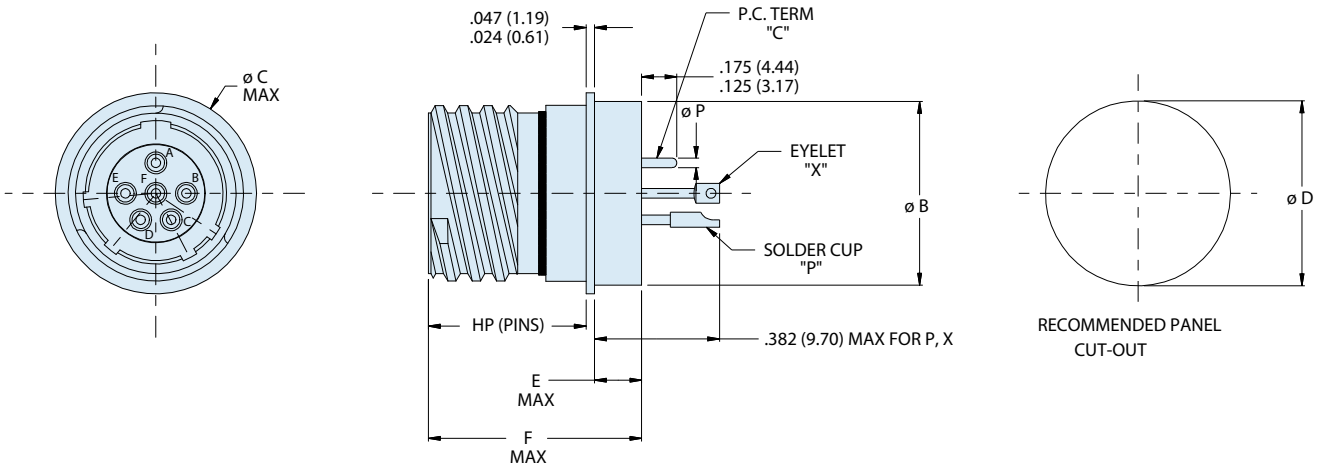

Solder Mount Feed-Thru Dimensions								
SHELL SIZE CODE	SHELL SIZE	A THREAD	B MAX	C MAX	D	E MAX	F MAX	HP MAX
A	9	.6250-.1P-.3L-TS-2A	.673 (17.09)	.764 (19.41)	.685 (17.40) .675 (17.15)	.201 (5.11)	.937 (23.80)	.677 (17.20)
B	11	.7500-.1P-.3L-TS-2A	.783 (19.89)	.858 (21.79)	.794 (20.17) .784 (19.91)	.201 (5.11)	.937 (23.80)	.677 (17.20)
C	13	.8750-.1P-.3L-TS-2A	.909 (23.09)	.980 (24.89)	.920 (23.37) .910 (23.11)	.201 (5.11)	.937 (23.80)	.677 (17.20)
D	15	1.0000-.1P-.3L-TS-2A	1.031 (26.19)	1.106 (28.09)	1.043 (26.49) 1.033 (26.24)	.201 (5.11)	.937 (23.80)	.677 (17.20)
E	17	1.1875-.1P-.3L-TS-2A	1.157 (29.39)	1.232 (31.29)	1.169 (29.69) 1.159 (29.44)	.201 (5.11)	.937 (23.80)	.677 (17.20)
F	19	1.2500-.1P-.3L-TS-2A	1.252 (31.80)	1.323 (33.60)	1.263 (32.08) 1.253 (31.83)	.201 (5.11)	.937 (23.80)	.677 (17.20)
G	21	1.3750-.1P-.3L-TS-2A	1.378 (35.00)	1.449 (36.80)	1.389 (35.28) 1.379 (35.03)	.201 (5.11)	.937 (23.80)	.677 (17.20)
H	23	1.5000-.1P-.3L-TS-2A	1.504 (38.20)	1.575 (40.00)	1.515 (38.48) 1.505 (38.23)	.232 (5.89)	.969 (24.61)	.677 (17.20)
J	25	1.6250-.1P-.3L-TS-2A	1.626 (41.30)	1.701 (43.21)	1.638 (41.61) 1.628 (41.35)	.232 (5.89)	.969 (24.61)	.677 (17.20)

© 2022 Glenair, Inc • 1211 Air Way, Glendale, CA 91201 • 818-247-6000 • www.glenair.com • U.S. CAGE code 06324 • SuperNine® Catalog
Dimensions in Inches (millimeters) are subject to change without notice.

Rev. 01.20.23

SuperNine® Glass seal hermetic

MIL-DTL-38999 Series III Type

233-271 Hermetic receptacle with thermocouple contacts

233-271-H7 JAM-NUT MOUNT RECEPTACLE

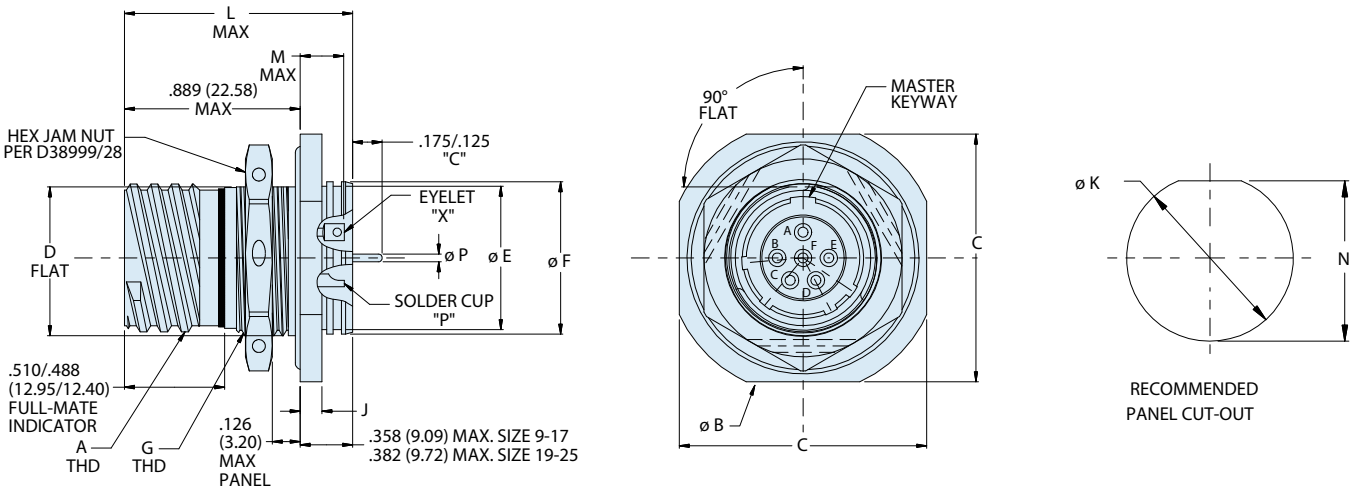

Jam-Nut Mount Feed-Thru Dimensions													
SHELL SIZE CODE	SHELL SIZE	A THREAD -0.1P-0.3L-TS	ø B	C A/F ±.015	D FLAT ±.005	ø E ±.012	ø F	G THREAD ISO METRIC	J ±.008	ø K ±.005	L MAX	P & X	N ±.005 (*±.003)
A	9	0.625	1.201 (30.51) 1.177 (29.90)	1.063 (27.00)	0.650 (16.51)	0.602 (15.29)	0.653 (16.59) 0.642 (16.31)	M17 X 1.0-6g	0.106 (2.69)	0.698 (17.73)	1.150 (29.21)	0.209 (5.31)	.658* (16.71)
B	11	0.750	1.386 (35.20) 1.362 (34.59)	1.252 (31.80)	0.750 (19.05)	0.724 (18.39)	0.775 (19.68) 0.764 (19.41)	M20 X 1.0-6g	0.106 (2.69)	0.830 (21.08)	1.150 (29.21)	0.209 (5.31)	0.766 (19.46)
C	13	0.875	1.512 (38.40) 1.488 (37.80)	1.374 (34.90)	0.937 (23.80)	0.850 (21.59)	0.905 (22.99) 0.894 (22.71)	M25 X 1.0-6g	0.106 (2.69)	1.015 (25.78)	1.154 (29.31)	0.201 (5.11)	0.950 (24.13)
D	15	1.000	1.638 (41.61) 1.614 (41.00)	1.500 (38.10)	1.061 (26.95)	0.976 (24.79)	1.031 (26.19) 1.020 (25.91)	M28 X 1.0-6g	0.106 (2.69)	1.140 (28.96)	1.154 (29.31)	0.201 (5.11)	1.080 (27.43)
E	17	1.187	1.764 (44.81) 1.740 (44.20)	1.626 (41.30)	1.186 (30.12)	1.102 (27.99)	1.153 (29.29) 1.142 (29.01)	M32 X 1.0-6g	0.106 (2.69)	1.265 (32.13)	1.154 (29.31)	0.201 (5.11)	1.205 (30.61)
F	19	1.250	1.949 (49.50) 1.925 (48.90)	1.811 (46.00)	1.311 (33.30)	1.228 (31.19)	1.279 (32.49) 1.268 (32.21)	M35 X 1.0-6g	0.138 (3.51)	1.390 (35.31)	1.185 (30.10)	0.201 (5.11)	1.330 (33.78)
G	21	1.375	2.075 (52.71) 2.051 (52.10)	1.937 (49.20)	1.436 (36.47)	1.350 (34.29)	1.405 (35.69) 1.394 (35.41)	M38 X 1.0-6g	0.138 (3.51)	1.515 (38.48)	1.185 (30.10)	0.201 (5.11)	1.455 (36.96)
H	23	1.500	2.201 (55.91) 2.177 (55.30)	2.063 (52.40)	1.561 (39.65)	1.476 (37.49)	1.531 (38.89) 1.520 (38.61)	M41 X 1.0-6g	0.138 (3.51)	1.640 (41.66)	1.185 (30.10)	0.201 (5.11)	1.580 (40.13)
J	25	1.625	2.323 (59.00) 2.299 (58.39)	2.189 (55.60)	1.686 (42.82)	1.602 (40.69)	1.653 (41.99) 1.642 (41.71)	M44 X 1.0-6g	0.138 (3.51)	1.765 (44.83)	1.185 (30.10)	0.201 (5.11)	1.705 (43.31)

© 2022 Glenair, Inc • 1211 Air Way, Glendale, CA 91201 • 818-247-6000 • www.glenair.com • U.S. CAGE code 06324 • SuperNine® Catalog
Dimensions in Inches (millimeters) are subject to change without notice.

Rev. 06.15.22

SuperNine® Glass seal hermetic

MIL-DTL-38999 Series III Type

233-271 Hermetic receptacle with thermocouple contacts

233-271-H8 WELD MOUNT RECEPTACLE

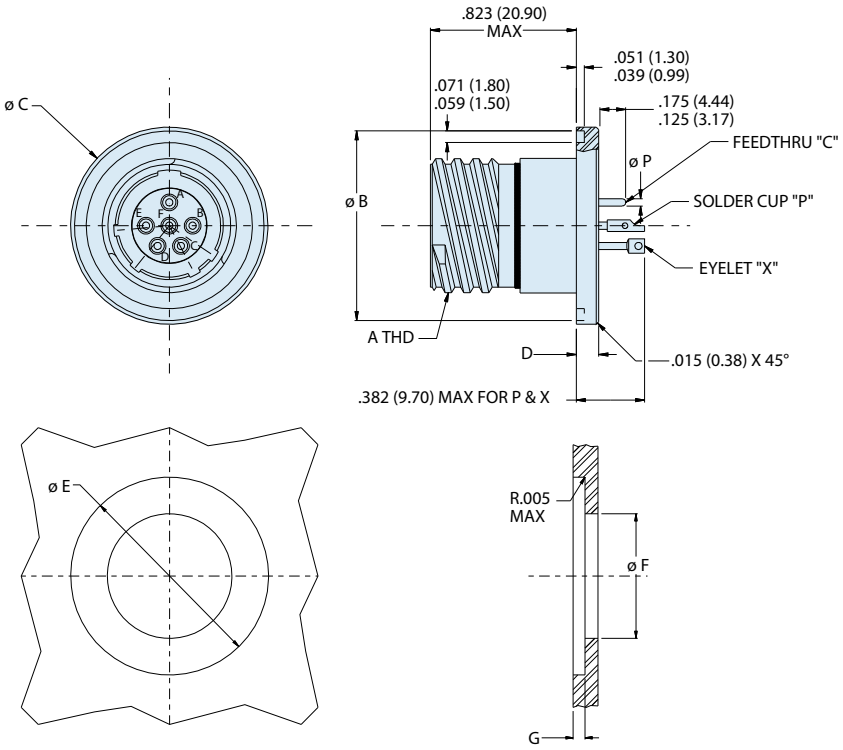

Weld Mount Feed-Thru Connector Dimensions					
SHELL SIZE CODE	SHELL SIZE	A THREAD	ø B	ø C	D
A	9	.6250-.1P-.3L-TS-2A	0.941 (23.90) 0.929 (23.60)	0.984 (24.99) 0.972 (24.69)	0.134 (3.40) 0.118 (3.00)
B	11	.7500-.1P-.3L-TS-2A	1.063 (27.00) 1.051 (26.70)	1.106 (28.09) 1.094 (27.79)	0.134 (3.40) 0.118 (3.00)
C	13	.8750-.1P-.3L-TS-2A	1.189 (30.20) 1.177 (29.90)	1.232 (31.29) 1.220 (30.99)	0.134 (3.40) 0.118 (3.00)
D	15	1.0000-.1P-.3L-TS-2A	1.315 (33.40) 1.303 (33.10)	1.358 (34.49) 1.346 (34.19)	0.134 (3.40) 0.118 (3.00)
E	17	1.1875-.1P-.3L-TS-2A	1.402 (35.61) 1.390 (35.31)	1.445 (36.70) 1.433 (36.40)	0.134 (3.40) 0.118 (3.00)
F	19	1.2500-.1P-.3L-TS-2A	1.547 (39.29) 1.535 (38.99)	1.591 (40.41) 1.579 (40.11)	0.134 (3.40) 0.118 (3.00)
G	21	1.3750-.1P-.3L-TS-2A	1.689 (42.90) 1.677 (42.60)	1.732 (43.99) 1.720 (43.69)	0.134 (3.40) 0.118 (3.00)
H	23	1.5000-.1P-.3L-TS-2A	1.854 (47.09) 1.842 (46.79)	1.898 (48.21) 1.886 (47.90)	0.165 (4.19) 0.149 (3.78)
J	25	1.6250-.1P-.3L-TS-2A	1.941 (49.30) 1.929 (49.00)	1.984 (50.39) 1.972 (50.09)	0.165 (4.19) 0.149 (3.78)

Recommended Panel Cutout			
SHELL SIZE	ø E	ø F MIN	DEPTH G ±.005
9	.990 (25.15) .985 (25.02)	0.300 (7.62)	0.126 (3.20)
11	1.112 (28.24) 1.107 (28.12)	0.430 (10.92)	0.126 (3.20)
13	1.238 (31.45) 1.233 (31.32)	0.550 (13.97)	0.126 (3.20)
15	1.364 (34.65) 1.359 (34.52)	0.675 (17.15)	0.126 (3.20)
17	1.451 (36.86) 1.446 (36.73)	0.795 (20.19)	0.126 (3.20)
19	1.597 (40.56) 1.592 (40.44)	0.895 (22.73)	0.126 (3.20)
21	1.738 (44.15) 1.733 (44.02)	1.010 (25.65)	0.126 (3.20)
23	1.904 (48.36) 1.899 (48.23)	1.135 (28.83)	0.157 (3.99)
25	1.990 (50.55) 1.985 (50.42)	1.250 (31.75)	0.157 (3.99)

© 2022 Glenair, Inc • 1211 Air Way, Glendale, CA 91201 • 818-247-6000 • www.glenair.com • U.S. CAGE code 06324 • SuperNine® Catalog
Dimensions in Inches (millimeters) are subject to change without notice.

Rev. 06.15.22

ADVANCED PERFORMANCE

SuperNine® Glass seal hermetic

MIL-DTL-38999 Series III Type

233-103 Bulkhead feed-thrus

Part Number Development							
Sample Part Number	**233-103**	**-H2**	**Z1**	**17-35**	**S**	**N**	**-02**
Series / Basic Part No.	Series 23 SuperNine Hermetic Bulkhead Feed-thru						
Connector Style	**H2** = Box Mount **DH7** = Dual O-ring Jam-Nut Mount **H7** = Jam-Nut Mount **H8** = Weld Mount						
Finish*	**Z1** = CRES, Passivated **ZL** = CRES, Nickel Finish						
Shell Size-Insert Arrangement*	Per MIL-DTL-38999/MIL-STD-1560						
Contact Type	**P** = Pin on panel side **PP** = Pin-Pin (See note 1) **S** = Socket on panel side **SS** = Socket-Socket (See note 1)						
Polarization*	**A**, **B**, **C**, **D**, **E**, **N** = Normal						
Panel Thickness	**01**, **02**, **03**; See panel thickness table per connector style. Consult factory for additional options.						

***Refer to Section A for complete details, consult factory for additional options**
Modification codes may be added directly to the end of any valid part number

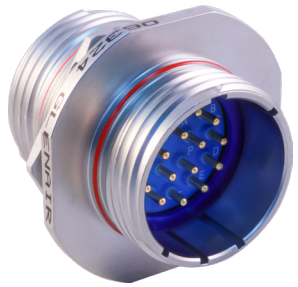

Hermetic Leak Rate Mod Codes	
Designator	**Required Leak Rate**
-585A	1 x 10^{-10}cc Helium per second
-585B	1 x 10^{-9}cc Helium per second
-585C	1 x 10^{-8}cc Helium per second

NOTES

1. For PP or SS style, only symmetrical layouts may be selected. Power to a given contact on one end will result in power to contact directly opposite, regardless of identification letter.
2. Glenair 233-103 will mate with any QPL manufacturer's 38999 Series III plug of same shell size, polarization and opposite contact gender.
3. Hermeticity: less than 1 x 10^{-7} ccHe/sec at 1 atmosphere differential.
4. For weld mount (H8) connector style, "SS" style, -01 dimensions "E" and "F" increase by .150"
5. Electrical safety limits must be established by user. Peak voltage, switching surge, transient, etc should be used to determine safe application

Material / Finish

- Shell and jam-nut (H7): CRES/passivate or CRES/nickel plate
- Contacts pin: nickel/iron alloy/gold plate
- Contacts sockets: copper alloy/gold plate insulator
- Insulator hermetic: vitreous glass/N.A
- Insulator socket: rigid dielectric/N.A
- Seals: fluorosilicone blend/N.A.

© 2022 Glenair, Inc • 1211 Air Way, Glendale, CA 91201 • 818-247-6000 • www.glenair.com • U.S. CAGE code 06324 • SuperNine® Catalog
Dimensions in Inches (millimeters) are subject to change without notice.

SuperNine® Glass seal hermetic

MIL-DTL-38999 Series III Type

233-103 Bulkhead feed-thrus

233-103-H2 BOX MOUNT RECEPTACLE

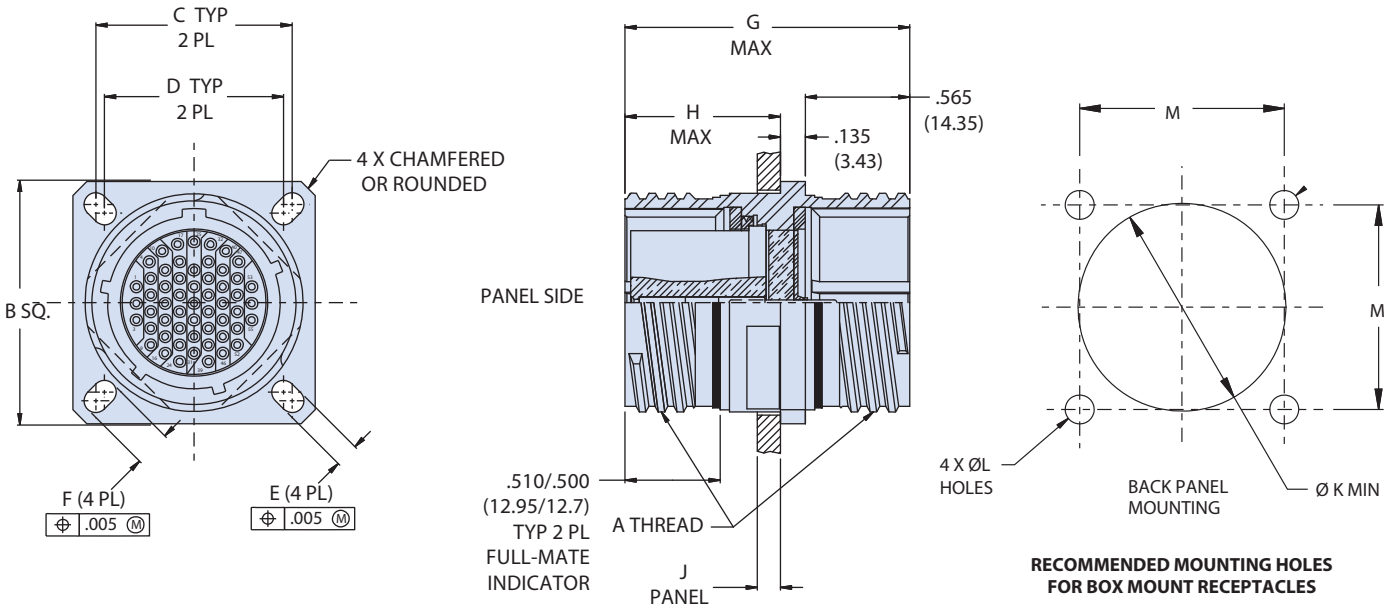

RECOMMENDED MOUNTING HOLES FOR BOX MOUNT RECEPTACLES

Dimensions						
SHELL SIZE	A THREAD	B SQ.	C BSC.	D BSC.	E	F
9	.6250 .1 P-.3L-TS-2A	0.949 (24.10) 0.925 (23.50)	0.719 (18.26)	0.594 (15.09)	0.136 (3.45) 0.120 (3.05)	0.224 (5.69) 0.208 (5.28)
11	.7500 .1 P-.3L-TS-2A	1.043 (26.49) 1.019 (25.88)	0.812 (20.62)	0.719 (18.26)	0.136 (3.45) 0.120 (3.05)	0.202 (5.13) 0.186 (4.72)
13	.8750 .1 P-.3L-TS-2A	1.138 (28.91) 1.114 (28.30)	0.906 (23.01)	0.812 (20.62)	0.136 (3.45) 0.120 (3.05)	0.202 (5.13) 0.186 (4.72)
15	1.0000 .1 P-.3L-TS-2A	1.232 (31.29) 1.208 (30.68)	0.969 (24.61)	0.906 (23.01)	0.136 (3.45) 0.120 (3.05)	0.181 (4.60) 0.165 (4.19)
17	1.1875 .1 P-.3L-TS-2A	1.323 (33.60) 1.299 (32.99)	1.062 (26.97)	0.969 (24.61)	0.136 (3.45) 0.120 (3.05)	0.202 (5.13) 0.186 (4.72)
19	1.2500 .1 P-.3L-TS-2A	1.449 (36.80) 1.425 (36.20)	1.156 (29.36)	1.062 (26.97)	0.136 (3.45) 0.120 (3.05)	0.202 (5.13) 0.186 (4.72)
21	1.3750 .1 P-.3L-TS-2A	1.575 (40.00) 1.551 (39.40)	1.250 (31.75)	1.156 (29.36)	0.136 (3.45) 0.120 (3.05)	0.202 (5.13) 0.186 (4.72)
23	1.5000 .1 P-.3L-TS-2A	1.701 (43.21) 1.677 (42.60)	1.375 (34.92)	1.25 (31.75)	0.162 (4.11) 0.146 (3.71)	0.250 (6.35) 0.234 (5.94)
25	1.6250 .1 P-.3L-TS-2A	1.823 (46.30) 1.799 (45.69)	1.500 (38.10)	1.375 (34.92)	0.162 (4.11) 0.146 (3.71)	0.250 (6.35) 0.234 (5.94)

Recommended Mounting Holes			
SHELL SIZE	Ø K MIN	Ø L HOLES	M
9	0.656 (16.66)	0.133 (3.38) 0.123 (3.12)	0.724 (18.39) 0.714 (18.14)
11	0.781 (19.84)	0.133 (3.38) 0.123 (3.12)	0.817 (20.75) 0.807 (20.50)
13	0.921 (23.39)	0.133 (3.38) 0.123 (3.12)	0.911 (23.14) 0.901 (22.89)
15	1.047 (26.59)	0.133 (3.38) 0.123 (3.12)	0.973 (24.71) 0.963 (24.46)
17	1.218 (30.94)	0.133 (3.38) 0.123 (3.12)	1.067 (27.10) 1.057 (26.85)
19	1.296 (32.92)	0.133 (3.38) 0.123 (3.12)	1.161 (29.49) 1.151 (29.24)
21	1.421 (36.09)	0.133 (3.38) 0.123 (3.12)	1.255 (31.88) 1.245 (31.62)
23	1.546 (39.27)	0.159 (4.04) 0.149 (3.78)	1.380 (35.05) 1.370 (34.80)
25	1.672 (42.47)	0.159 (4.04) 0.149 (3.78)	1.505 (38.23) 1.495 (37.97)

Box Mount (H2) Panel Thickness			
DASH NO.	G DIM, OAL MAX	H DIM, MAX	J DIM, PANEL
-01	1.600 (40.64)	.843 (21.41)	.125 (3.18) .062 (1.57)
-02	1.730 (43.94)	1.040 (26.42)	.250 (6.35) .062 (1.57)
-03	2.000 (50.80)	1.290 (32.77)	.500 (12.70) .062 (1.57)

© 2022 Glenair, Inc • 1211 Air Way, Glendale, CA 91201 • 818-247-6000 • www.glenair.com • U.S. CAGE code 06324 • SuperNine® Catalog
Dimensions in Inches (millimeters) are subject to change without notice.

SuperNine® Glass seal hermetic

MIL-DTL-38999 Series III Type

233-103 Bulkhead feed-thrus

233-103-H7 JAM-NUT MOUNT AND
233-103-DH7 DUAL O-RING JAM-NUT RECEPTACLE

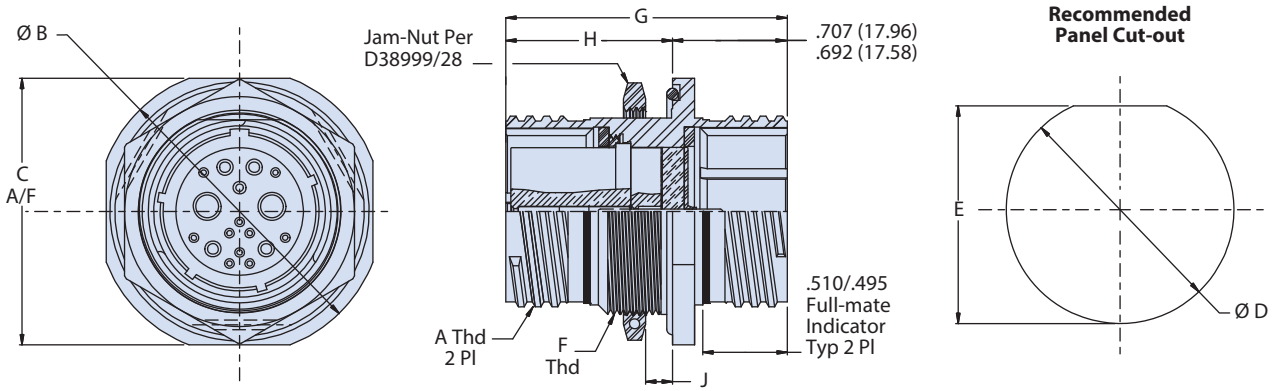

Dimensions								
SHELL SIZE	A THREAD 0.1 P-0.3L-TS-2	H7Jam-Nut		DH7 Dual O-Ring Jam-Nut		D DIA	E DIM	F THREAD METRIC X 1.0–6G
		B DIA	C	B DIA	C			
9	.6250	1.189 (30.20)	1.063 (27.00)	1.500 (38.10)	1.375 (34.92)	.703 (17.86) .693 (17.60)	.661 (16.79) .655 (16.64)	M17
11	.7500	1.375 (34.92)	1.252 (31.80)	1.625 (41.28)	1.500 (38.10)	.835 (21.21) .825 (20.96)	.771 (19.58) .761 (19.33)	M20
13	.8750	1.500 (38.10)	1.374 (34.90)	1.752 (44.50)	1.626 (41.30)	1.020 (25.91) 1.010 (25.65)	.955 (24.26) .945 (24.00)	M25
15	1.0000	1.626 (41.30)	1.500 (38.10)	1.937 (49.20)	1.811 (46.00)	1.145 (29.08) 1.135 (28.83)	1.085 (27.56) 1.075 (27.30)	M28
17	1.1875	1.752 (44.50)	1.626 (41.30)	2.063 (52.40)	1.937 (49.20)	1.270(32.26) 1.260 (32.00)	1.210 (30.73) 1.200 (30.48)	M32
19	1.2500	1.937 (49.20)	1.811 (46.00)	2.189 (55.60)	2.063 (52.40)	1.395(35.43) 1.385 (35.18)	1.335 (33.91) 1.325 (33.65)	M35
21	1.3750	2.063 (52.40)	1.937 (49.20)	2.311 (58.70)	2.189 (55.60)	1.520(38.61) 1.510 (38.35)	1.460 (37.08) 1.450 (36.83)	M38
23	1.5000	2.189 (55.60)	2.063 (52.40)	2.500 (63.50)	2.300 (58.42)	1.645(41.78) 1.635 (41.53)	1.585 (40.26) 1.575 (40.00)	M41
25	1.6250	2.311 (58.70)	2.189 (55.60)	2.625 (66.68)	2.400 (60.96)	1.770(44.96) 1.760 (44.70)	1.710 (43.43) 1.700 (43.18)	M44

Jam-Nut Mount (H7) Panel Thickness			
DASH NO.	G DIM, OAL MAX	H DIM, MAX	J DIM, PANEL
-01	1.670 (42.42)	.890 (22.61)	.125 (3.18) .062 (1.57)
-02	1.780 (45.21)	1.090 (27.69)	.250 (6.35) .062 (1.57)
-03	2.030 (51.56)	1.340 (34.04)	.500 (12.70) .062 (1.57)

© 2022 Glenair, Inc • 1211 Air Way, Glendale, CA 91201 • 818-247-6000 • www.glenair.com • U.S. CAGE code 06324 • SuperNine® Catalog
Dimensions in Inches (millimeters) are subject to change without notice.

SuperNine® Glass seal hermetic

MIL-DTL-38999 Series III Type

233-103 Bulkhead feed-thrus

233-103-H8 WELD MOUNT RECEPTACLE

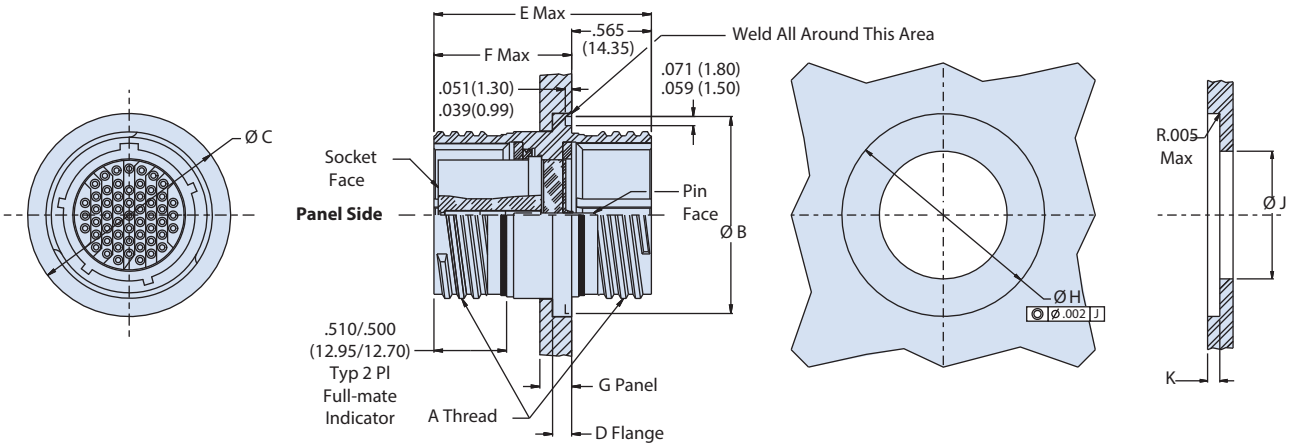

Dimensions					
Shell Size Code	Shell Size	A Thread	Ø B	Ø C	D
A	9	.6250-.1P-.3L-TS-2A	.941 (23.90) .929 (23.60)	.984 (24.99) .972 (24.69)	.134 (3.40) .118 (3.00)
B	11	.7500-.1P-.3L-TS-2A	1.063 (27.00) 1.051 (26.70)	1.106 (28.09) 1.094 (27.79)	.134 (3.40) .118 (3.00)
C	13	.8750-.1P-.3L-TS-2A	1.189 (30.20) 1.177 (29.90)	1.232 (31.29) 1.220 (30.99)	.134 (3.40) .118 (3.00)
D	15	1.0000-.1P-.3L-TS-2A	1.315 (33.40) 1.303 (33.10)	1.358 (34.49) 1.346 (34.19)	.134 (3.40) .118 (3.00)
E	17	1.1875-.1P-.3L-TS-2A	1.402 (35.61) 1.390 (35.31)	1.445 (36.70) 1.433 (36.40)	.134 (3.40) .118 (3.00)
F	19	1.2500-.1P-.3L-TS-2A	1.547 (39.29) 1.535 (38.99)	1.591 (40.41) 1.579 (40.11)	.134 (3.40) .118 (3.00)
G	21	1.3750-.1P-.3L-TS-2A	1.689 (42.90) 1.677 (42.60)	1.732 (43.99) 1.720 (43.69)	.134 (3.40) .118 (3.00)
H	23	1.5000-.1P-.3L-TS-2A	1.854 (47.09) 1.842 (46.79)	1.898 (48.21) 1.886 (47.90)	.165 (4.19) .149 (3.78)
J	25	1.6250-.1P-.3L-TS-2A	1.941 (49.30) 1.929 (49.00)	1.984 (50.39) 1.972 (50.09)	.165 (4.19) .149 (3.78)

Recommended Panel Cutout			
Shell Size	Ø H	Ø J ±.005 (0.13)	Depth K ±.005 (0.13)
9	.990/.985 (25.15/ 25.02)	.635 (16.13)	.126 (3.20)
11	1.112/1.107 (28.24/ 28.12)	.760 (19.30)	.126 (3.20)
13	1.238/1.233 (31.45/ 31.32)	.885 (22.48)	.126 (3.20)
15	1.364/1.359 (34.65/34.52)	1.010 (25.65)	.126 (3.20)
17	1.451/1.446 (36.86/ 36.73)	1.195 (3.35)	.126 (3.20)
19	1.597/1.592 (40.56/ 40.44)	1.260 (32.00)	.126 (3.20)
21	1.738/1.733 (44.15/ 44.02)	1.385 (35.18)	.126 (3.20)
23	1.894/1.899 (48.11/ 48.23)	1.510 (38.35)	.157 (3.99)
25	1.990/1.985 (50.55/ 50.42)	1.635 (41.53)	.157 (3.99)

Weld Mount (H8) Panel Thickness			
Dash no	E Dim, OAL Max	F Dim, Max	G Dim, Panel
-01	1.630 (41.40)	1.060 (26.92)	.250 (6.35) .175 (4.44)
-02	1.750 (44.45)	1.180 (29.97)	4.25 (107.95) .175 (4.44)
-03	1.920 (48.77)	1.350 (34.29)	.600 (15.24) .175 (4.44)

© 2022 Glenair, Inc • 1211 Air Way, Glendale, CA 91201 • 818-247-6000 • www.glenair.com • U.S. CAGE code 06324 • SuperNine® Catalog
Dimensions in Inches (millimeters) are subject to change without notice.

SuperNine® Glass seal hermetic

MIL-DTL-38999 Series III Type

233-261 Bulkhead feed-thru with shielded contacts

Part Number Development									
Sample Part Number	**233-261**	**-H2**	**Z1**	**17**	**Q**	**-02**	**S**	**N**	**-01**
Series / Basic Part No.	Series 23 SuperNine Bulkhead Feed-thru								
Connector Style	**H2** = Box Mount **H7** = Jam-Nut Mount **DH7** = Dual O-ring, Jam-Nut Mount **H8** = Weld Mount								
Finish*	**Z1** = CRES, Passivated **ZL** = CRES, Nickel Finish								
Shell Size	Per MIL-DTL-38999								
Contact Type	**C** = Coax **Q** = Quadrax (Size 8 contacts only) **T** = Concentric Twinax **P** = Power Contacts See Special RF contact arrangements beginning on page D-6 for more details								
Arrangement	Per MIL-STD-1560								
Configuration	**P** = Pin on Jam Nut Side **S** = Socket on Jam Nut Side **PP** = Pin-Pin (See note 2) **SS** = Socket-Socket (See note 2)								
Polarization*	**A**, **B**, **C**, **D**, **E**, **N** = Normal; see section A for key position details								
Panel Thickness	**-01** = .125/.062 **-02** = .250/.062 **-03** = .500/.062; See Panel Thickness Table								

***Refer to Section A for complete details, consult factory for additional options**
Modification codes may be added directly to the end of any valid part number



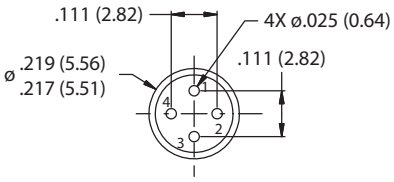

Quadrax Pin Interface
(Cavity Id Refer. Only)
For 100 Ohm Nominal Impedance

Contact Performance	
Size and Type	**Frequency**
#12 Coax	2 GHz
#8 Coax	1 GHz
#8 Twinax (Conc.)	20 MHz
#8 Quadrax	1 GHz

Material/Finish

- Shell and jam-nut (H7 and DH7): 300 series CRES/per part number development
- Contact, pin: nickel-iron and nickel alloy/gold plate
- Contact, socket: copper alloy/gold plate
- Hoods, sockets: CRES/passivate
- Insulator, hermetic: full glass/N.A.
- Insulator, socket: rigid dielectric/N.A.
- Seals: fluorosilicone blend elastomer/N.A.

Shell Size / Insert Arrangement Availability[3,4]										
Arr. No.	**Size 22**	**Cntct Type**	**Size 20**	**Cntct Type**	**Size 16**	**Cntct Type**	**Size 12**	**Cntct Type**	**Size 8**	**Cntct Type**
15-21	17	S/P	3	S/P	---	N/A	1	N/A	---	N/A
17-2*	38	S/P	---	N/A	---	N/A	---	N/A	1	TWINAX
17-3*	38	S/P	---	N/A	---	N/A	---	N/A	1	TWINAX
17-6	---	N/A	---	S/P	---	N/A	6	COAX	---	N/A
17-11	---	N/A	8	N/A	---	N/A	3	COAX	---	N/A
19-19	14	S/P	---	N/A	---	N/A	---	N/A	---	TWINAX
21-11	---	N/A	---	N/A	---	N/A	11	N/A	---	N/A
21-29	---	N/A	19	S/P	4	S/P	4	COAX	4	N/A
21-75‡	---	N/A	---	N/A	---	N/A	---	COAX	4	TWINAX
21-76‡	---	N/A	---	N/A	---	N/A	---	N/A	2	TWINAX
25-7†	----	S/P	---	N/A	---	N/A	---	N/A	8	TWINAX
25-8◊	97	N/A	---	N/A	---	N/A	---	N/A	2	TWINAX
25-9†	---	S/P	---	N/A	---	N/A	---	N/A	8	TWINAX
25-10◊	97	N/A	---	N/A	---	N/A	---	N/A	---	TWINAX
25-19	---	N/A	---	N/A	---	N/A	19	COAX	3	N/A
25-20#	---	N/A	10	S/P	13	S/P	4	COAX	3	TWINAX
25-21#	---	N/A	10	S/P	13	S/P	4	COAX	2	TWINAX
25-46@	---	N/A	40	S/P	4	S/P	---	N/A	2	COAX
25-47@	---	N/A	40	S/P	4	S/P	---	N/A	2	COAX
25-90+	---	N/A	40	S/P	4	S/P	---	N/A	2	TWINAX
25-91+	---	N/A	40	S/P	4	S/P	---	N/A	2	TWINAX

NOTES

1. Hermeticity: <1 x 10^-7 ccHe/sec @ 1 atmosphere delta pressure
2. For PP or SS style, only symmetrical layouts may be selected. Power applied to contact on one side will result in power to the opposite contact, regardless of marking
3. Arrangements marked with like symbols (I.E. 17-2* and 17-3*) are identical. Environmental connectors use contact sealing boots.
4. When there are #12 and #8 in arrangement, the option is #8 only. Balance of contacts are power. Consult factory for other contact options.
5. For shell style H2, SS style, dimensions "G' and "H" will increase .100"
6. For shell style H8, SS style, 01 dimensions "E" and "F" increase by .150"

© 2022 Glenair, Inc • 1211 Air Way, Glendale, CA 91201 • 818-247-6000 • www.glenair.com • U.S. CAGE code 06324 • SuperNine® Catalog
Dimensions in Inches (millimeters) are subject to change without notice.

SuperNine® Glass seal hermetic

MIL-DTL-38999 Series III Type

233-261 Bulkhead feed-thru with shielded contacts

233-261-H2 BOX MOUNT FEED-THRU CONNECTOR

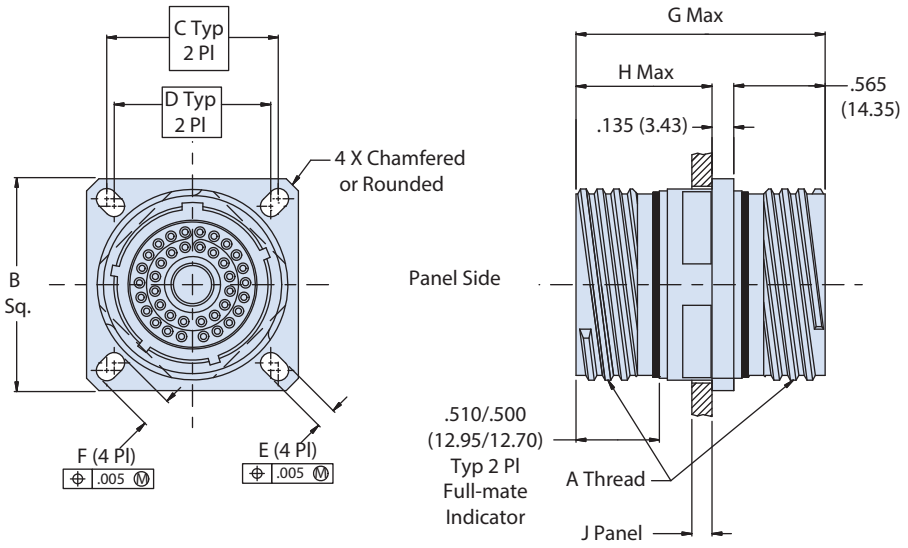

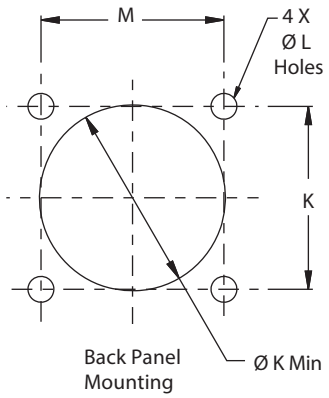

Recommended Mounting Holes for Box Mount Receptacles

Dimensions						
Shell Size	A Thread	B SQ	C Bsc	D BSC	E	F
9	.6250 -.1 P-0.3L-TS-2A	.949 (24.10) .925 (23.50)	.719 (18.26)	.594 (15.09)	.136 (3.45) .120 (3.05)	.224 (5.69) .208 (5.28)
11	.7500 -.1 P-0.3L-TS-2A	1.043 (26.49) 1.019 (25.88)	.812 (20.62)	.719 (18.26)	.136 (3.45) .120 (3.05)	.202 (5.13) .186 (4.72)
13	.8750 -.1 P-0.3L-TS-2A	1.138 (28.91) 1.114 (28.30)	.706 (17.93)	.812 (20.62)	.136 (3.45) .120 (3.05)	.202 (5.13) .186 (4.72)
15	1.0000 -.1 P-0.3L-TS-2A	1.232 (31.29) 1.208 (30.68)	.969 (24.61)	.906 (23.01)	.136 (3.45) .120 (3.05)	.181 (4.60) .165 (4.19)
17	1.1875 -.1 P-0.3L-TS-2A	1.323 (33.60) 1.299 (32.99)	1.062 (26.97)	.969 (24.61)	.136 (3.45) .120 (3.05)	.202 (5.13) .186 (4.72)
19	1.2500 -.1 P-0.3L-TS-2A	1.449 (36.80) 1.425 (36.20)	1.156 (29.36)	1.062 (26.97)	.136 (3.45) .120 (3.05)	.202 (5.13) .186 (4.72)
21	1.3750 -.1 P-0.3L-TS-2A	1.575 (40.00) 1.551 (39.40)	1.250 (31.75)	1.156 (29.36)	.136 (3.45) .120 (3.05)	.202 (5.13) .186 (4.72)
23	1.5000 -.1 P-0.3L-TS-2A	1.701 (43.21) 1.677 (42.60)	1.375 (34.92)	1.250 (31.75)	.162 (4.11) .146 (3.71)	.250 (6.35) .234 (5.94)
25	1.6250 -.1 P-0.3L-TS-2A	1.823 (46.30) 1.799 (45.69)	1.500 (38.10)	1.375 (34.92)	.162 (4.11) .146 (3.71)	.250 (6.35) .234 (5.94)

Box Mount Dimensions			
Shell Size	Ø K Min	Ø L Holes	M
9	.656 (16.66)	.133 (3.38) .123 (3.12)	.724 (18.39) .714 (18.14)
11	.781 (19.84)	.133 (3.38) .123 (3.12)	.817 (20.75) .807 (20.50)
13	.921 (23.39)	.133 (3.38) .123 (3.12)	.911 (23.14) .901 (22.89)
15	1.047 (26.59)	.133 (3.38) .123 (3.12)	.973 (24.71) .963 (24.46)
17	1.218 (30.94)	.133 (3.38) .123 (3.12)	1.067 (27.10) 1.57 (39.88)
19	1.296 (32.92)	.133 (3.38) .123 (3.12)	1.161 (29.49) 1.151 (29.24)
21	1.421 (36.09)	.133 (3.38) .123 (3.12)	1.255 (31.88) 1.245 (31.62)
23	1.546 (39.27)	.159 (4.04) .149 (3.78)	1.380 (35.05) 1.370 (34.80)
25	1.672 (42.47)	.159 (4.04) .149 (3.78)	1.505 (38.23) 1.495 (37.97)

Panel Thickness			
Shell Size	G Dim, OAL Max	H Dim, Max	J Dim, Panel
-01[4]	1.600 (40.64)	.843 (21.41)	.125 (3.17)/.062 (1.57)
-02	1.730 (43.94)	1.040 (26.42)	.250 (6.35)/.062 (1.57)
-03	2.000 (50.80)	1.290 (32.77)	.500 (12.70)/.062 (1.57)

© 2022 Glenair, Inc • 1211 Air Way, Glendale, CA 91201 • 818-247-6000 • www.glenair.com • U.S. CAGE code 06324 • SuperNine® Catalog
Dimensions in Inches (millimeters) are subject to change without notice.

SuperNine® Glass seal hermetic

MIL-DTL-38999 Series III Type

233-261 Bulkhead feed-thru with shielded contacts

233-261-H7 JAM-NUT MOUNT FEED-THRU CONNECTOR AND 233-261-DH7 DUAL O-RING JAM-NUT MOUNT FEED-THRU CONNECTOR

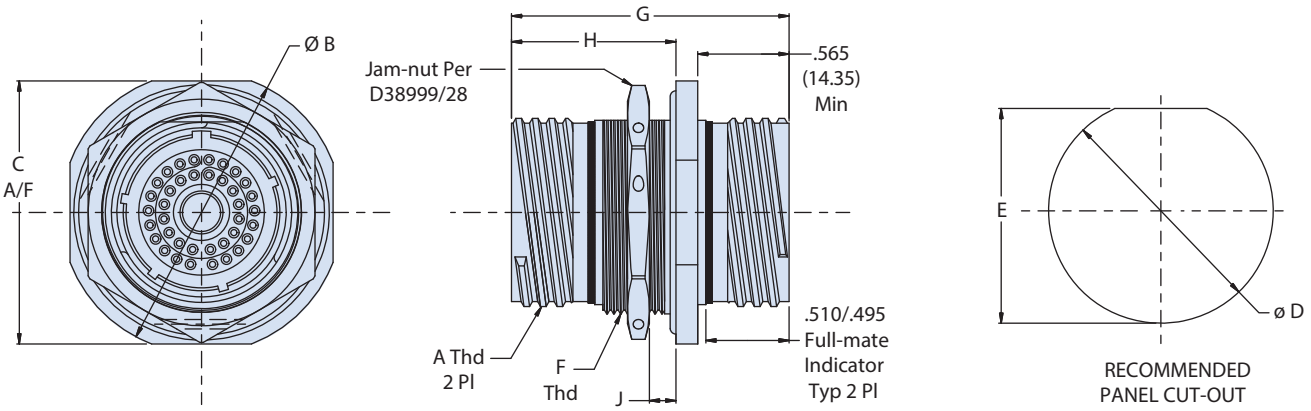

Dimensions				
Shell Size	A Thread	D BSC	E	F Thread
9	.6250 -.1 P-0.3L-TS-2A	.703 (17.86) .693 (17.60)	.661 (16.79) .665 (16.89)	M17 x 1.0-6g
11	.7500 -.1 P-0.3L-TS-2A	.835 (21.21) .825 (20.95)	.771 (19.58) .761 (19.33)	M20 x 1.0-6g
13	.8750 -.1 P-0.3L-TS-2A	1.020 (25.91) 1.010 (25.65)	.955 (24.26) .945 (24.00)	M25 x 1.0-6g
15	1.0000 -.1 P-0.3L-TS-2A	1.145 (29.08) 1.135 (28.83)	1.085 (27.56) 1.075 (27.30)	M28 x 1.0-6g
17	1.1875 -.1 P-0.3L-TS-2A	1.270 (32.26) 1.260 (32.00)	1.210 (30.73) 1.200 (30.48)	M32 x 1.0-6g
19	1.2500 -.1 P-0.3L-TS-2A	1.395 (35.43) 1.385 (35.18)	1.335 (33.91) 1.325 (33.65)	M35 x 1.0-6g
21	1.3750 -.1 P-0.3L-TS-2A	1.520 (38.61) 1.510 (38.35)	1.460 (37.08) 1.450 (36.83)	M38 x 1.0-6g
23	1.5000 -.1 P-0.3L-TS-2A	1.645 (41.78) 1.635 (41.53)	1.585 (40.26) 1.575 (40.00)	M41 x 1.0-6g
25	1.6250 -.1 P-0.3L-TS-2A	1.770 (44.96) 1.760 (44.70)	1.710 (43.43) 1.700 (43.18)	M44 x 1.0-6g

Jam-Nut Mount (H7) Dimension		
Shell Size	B DIA	C MAX
9	1.189 (30.20)	1.063 (27.00)
11	1.375 (34.92)	1.252 (31.80)
13	1.500 (38.10)	1.375 (34.92)
15	1.626 (41.30)	1.500 (38.10)
17	1.752 (44.50)	1.626 (41.30)
19	1.937 (49.20)	1.811 (46.00)
21	2.063 (52.40)	1.937 (49.20)
23	2.189 (55.60)	2.063 (52.40)
25	2.311 (58.70)	2.189 (55.60)

Dual O-ring, Jam-Nut (DH7) Mount Dimension		
Shell Size	B DIA	C MAX
9	1.500 (38.10)	1.375 (34.92)
11	1.625 (41.28)	1.500 (38.10)
13	1.752 (44.50)	1.626 (41.30)
15	1.937 (49.20)	1.811 (46.00)
17	2.063 (52.40)	1.937 (49.20)
19	2.189 (55.60)	2.063 (52.40)
21	2.311 (58.70)	2.189 (55.60)
23	2.500 (63.50)	2.300 (58.42)
25	2.625 (66.68)	2.400 (60.96)

Panel Thickness			
Shell Size	G Dim, OAL Max	H Dim, Max	J Dim, Panel
-01	1.670 (42.42)	.889 (22.58)	.125 (3.17) .062 (1.57)
-02	1.800 (45.72)	1.090 (27.69)	.250 (6.35) .062 (1.57)
-03	2.050 (52.07)	1.340 (34.04)	.500 (12.70) .062 (1.57)

© 2022 Glenair, Inc • 1211 Air Way, Glendale, CA 91201 • 818-247-6000 • www.glenair.com • U.S. CAGE code 06324 • SuperNine® Catalog
Dimensions in Inches (millimeters) are subject to change without notice.

SuperNine® Glass seal hermetic

MIL-DTL-38999 Series III Type

233-261 Bulkhead feed-thru with shielded contacts

233-261-H8 WELD MOUNT FEED-THRU CONNECTOR

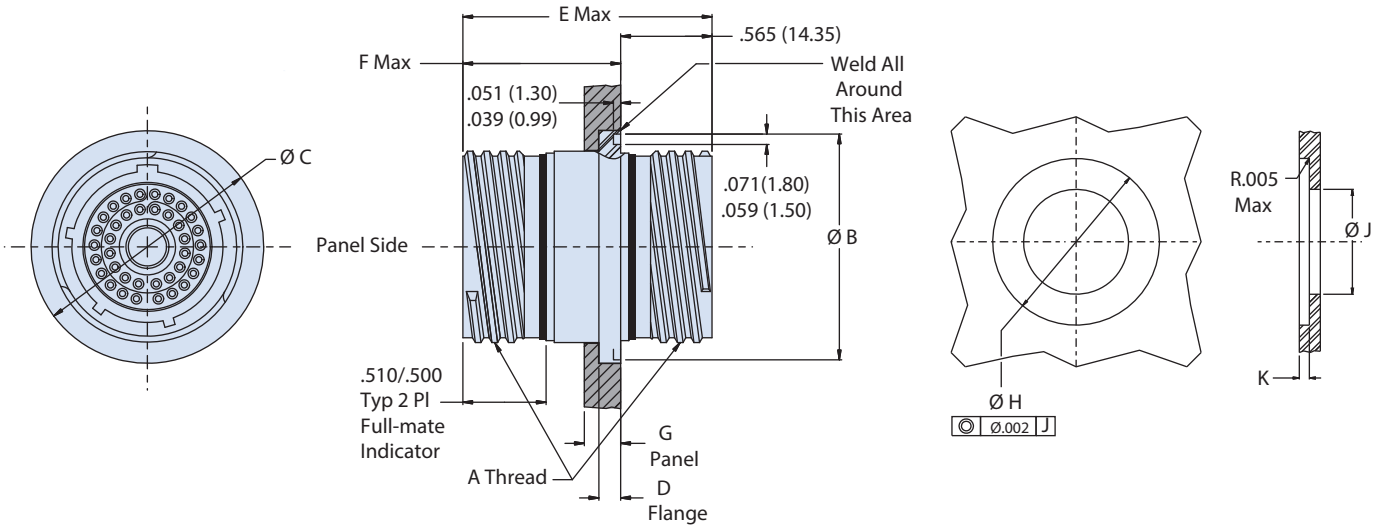

Panel Thickness			
SHELL SIZE	E DIM, OAL MAX	F DIM, MAX	G DIM, PANEL
-01[5]	1.520 (38.61)	.960 (24.38)	.125 (3.17)/.062 (1.57)
-02	1.670 (42.42)	1.110 (28.19)	.250 (6.35)/.062 (1.57)
-03	1.920 (48.77)	1.350 (34.29)	.500 (12.70)/.062 (1.57)

Dimensions				
Shell Size	A Thread	Ø B	Ø C	Ø D
9	.6250 -.1 P-0.3L-TS-2A	.941 (23.90) .929 (23.60)	.984 (24.99) .972 (24.69)	.134 (3.40) .118 (3.00)
11	.7500 -.1 P-0.3L-TS-2A	1.063 (27.00) 1.051 (26.70)	1.106 (28.09) 1.094 (27.79)	.134 (3.40) .118 (3.00)
13	.8750 -.1 P-0.3L-TS-2A	1.189 (30.20) 1.177 (29.90)	1.232 (31.29) 1.220 (30.99)	.134 (3.40) .118 (3.00)
15	1.0000 -.1 P-0.3L-TS-2A	1.315 (33.40) 1.303 (33.10)	1.358 (34.49) 1.346 (34.19)	.134 (3.40) .118 (3.00)
17	1.1875 -.1 P-0.3L-TS-2A	1.402 (35.61) 1.390 (35.31)	1.445 (36.70) 1.433 (36.40)	.134 (3.40) .118 (3.00)
19	1.2500 -.1 P-0.3L-TS-2A	1.547 (39.29) 1.535 (38.99)	1.591 (40.41) 1.579 (40.11)	.134 (3.40) .118 (3.00)
21	1.3750 -.1 P-0.3L-TS-2A	1.689 (42.90) 1.677 (42.60)	1.732 (43.99) 1.720 (43.69)	.134 (3.40) .118 (3.00)
23	1.5000 -.1 P-0.3L-TS-2A	1.854 (47.09) 1.842 (46.79)	1.898 (48.21) 1.886 (47.90)	.165 (4.19) .149 (3.78)
25	1.6250 -.1 P-0.3L-TS-2A	1.941 (49.30) 1.929 (49.00)	1.984 (50.39) 1.972 (50.09)	.165 (4.19) .149 (3.78)

Recommended Panel Cutout			
Shell Size	Ø H	Ø J ±.005	DEPTH K ±.005
9	.990/.985 (25.15/ 25.02)	0.635 (16.13)	0.126 (3.20)
11	1.112/1.107 (28.24/28.12)	0.760 (19.30)	0.126 (3.20)
13	1.238/1.233 (28.12/ 31.32)	0.885 (22.48)	0.126 (3.20)
15	1.364/1.359 (34.65/34.52)	1.010 (25.65)	0.126 (3.20)
17	1.451/1.446 (36.86/ 36.73)	1.195 (30.35)	0.126 (3.20)
19	1.597/1.592 (40.56/ 40.44)	1.260 (32.00)	0.126 (3.20)
21	1.738/1.733 (44.15/ 44.02)	1.385 (35.18)	0.126 (3.20)
23	1.894/1.899 (48.11/48.23)	1.510 (38.35)	0.157 (3.99)
25	1.990/1.985 (50.55/ 50.42)	1.635 (41.53)	0.157 (3.99)

1. Crimp removable socket contacts to conform to M39029/57-359 (size 12) M39029/57-358 (size 16), M39029/57-357 (size 20) and M39029/57-354 (size 22D) contacts required to fully populate rear, plus spares as required by mil-spec, are shipped loose with the connector.

© 2022 Glenair, Inc • 1211 Air Way, Glendale, CA 91201 • 818-247-6000 • www.glenair.com • U.S. CAGE code 06324 • SuperNine® Catalog
Dimensions in Inches (millimeters) are subject to change without notice.

ADVANCED PERFORMANCE

SuperNine® Glass seal hermetic

MIL-DTL-38999 Series III Type

233-284 Bulkhead feed-thru with thermocouple contacts

Part Number Development									
Sample Part Number	**233-284**	**-H7**	**Z1**	**17**	**-35**	**K**	**1**	**N**	**-02**
Series / Basic Part No.	Series 23 SuperNine Bulkhead Feed-thru								
Connector Style	**H2** = Box Mount **H7** = Jam-Nut Mount **DH7** = Jam-Nut Mount (dual o-ring) **H8** = Weld Mount								
Finish*	**Z1** = CRES, Passivated **ZL** = CRES, Nickel Finish								
Shell Size	Per MIL-DTL-38999								
Arrangement	Per MIL-STD-1560								
Contact Style	**E**, **J**, **K**, **T**; T/C Type per table , Pin-Pin only								
Pairs of T/C	See note 4								
Broach Position*	**A**, **B**, **C**, **D**, **E**, **N** = Normal; see section A for key position details								
Panel Thickness	**-01** = .125/.062 **-02** = .250/.062 **-03** = .500/.062; See Panel Thickness Table								

Contact Types			
T/C Types	Positive Legs	Negative Legs	Application Range (°F)[5]
E	Chromel	Constantan	200° to 1650°
J	Iron	Constantan	200° to 1400°
K	Chromel	Alumel	200° to 2300°
T	Copper	Constantan	-330° to 660°

DWV Voltage Levels at Sea Level	
Service Rating	Voltage AC RMS 60Hz
M	1300 VAC
I	1800 VAC
II	2300 VAC
N	1000 VAC

UNIVERSAL POLARIZATION CONFIGURATION

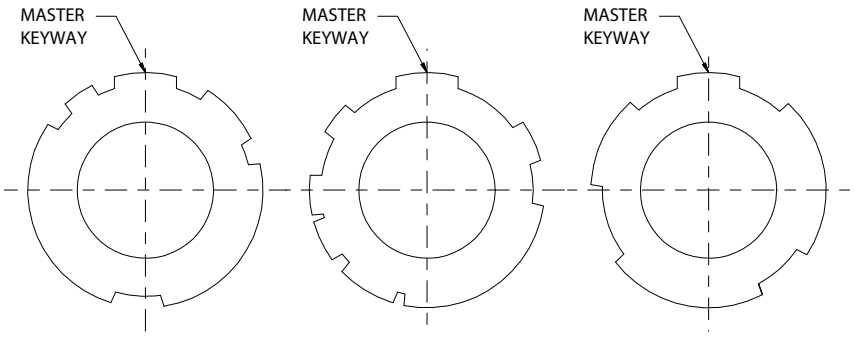

UNIVERSAL POLARIZATION SIZE 9 KEYWAY RECEPTACLE

UNIVERSAL POLARIZATION SIZE 11, 13, 15 KEYWAY RECEPTACLE

UNIVERSAL POLARIZATION SIZE 17 THRU 25 KEYWAY RECEPTACLE

Material/Finish

- Shell and jam-nut: Z1 = 300 Series CRES/Passivated, ZL = 300 Series CRES/ nickel plated
- Contact, pins thermocouple = per P/N development/JP=cadmium; TP=gold flash; balance=none; non-thermocouple=nickel alloy/gold plated
- Insulator, hermetic = Fused vitreous glass/none
- Spacers, pins: rigid dielectric/none
- Seals & o-rings: fluorosilicone/none

NOTES

1. Hermeticity: <1 x 10^-7 ccHe/sec @ 1 atmosphere delta pressure
2. IR: 5000 MegOhms min @ 500 VDC
3. DWV: Per DWV Voltage at Sea Level table
4. All thermocouple contact pairs will begin at contact #1 (A) as "+", and 2 (B) as "-". Each additional pair of thermocouple contacts will repeat sequentailly I.E.: 1&2 (A&B); 3&4 (C&D), etc
5. Application range is for thermocouple, not the connector. Connector temp range is -85 to 392°F
6. Glenair 233-284-H7 is designed to mate to any QPL D38999/26 plug with same shell size, arrangement, polarization, and opposite (socket) contact gender
7. Glenair 233-284-H7 is available as pin-to-pin only

© 2018 Glenair, Inc • 1211 Air Way, Glendale, CA 91201 • 818-247-6000 • www.glenair.com • U.S. CAGE code 06324 • SuperNine® Catalog
Dimensions in Inches (millimeters) are subject to change without notice.

Rev. 06.15.22

SuperNine® Glass seal hermetic

MIL-DTL-38999 Series III Type

233-284 Bulkhead feed-thru with thermocouple contacts

233-284-H2 DUAL O-RING, JAM-NUT FEED-THRU CONNECTOR

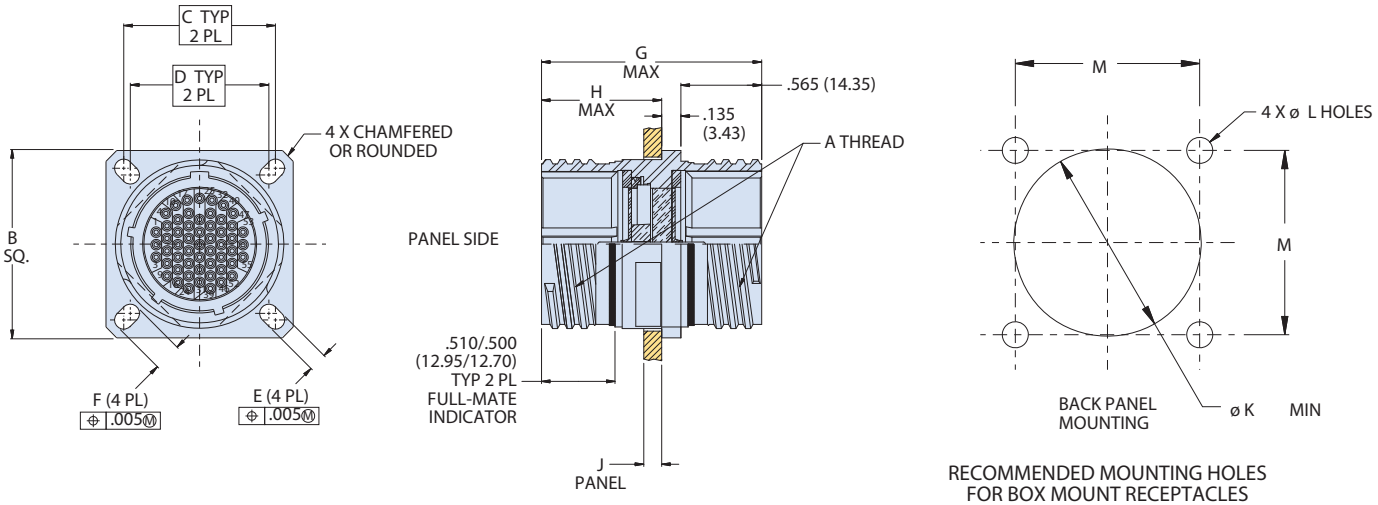

RECOMMENDED MOUNTING HOLES
FOR BOX MOUNT RECEPTACLES

Dual O-ring, Jam-nut Feed-thru Connector Dimensions						
SHELL SIZE	A THREAD	B SQ	C BSC	D BSC	E	F
9	.6250-.1P-.3L-TS-2A	0.949 (24.10) 0.925 (23.50)	0.719 (18.26)	0.594 (15.09)	0.136 (3.45) 0.120 (3.05)	0.224 (5.69) 0.208 (5.28)
11	.7500-.1P-.3L-TS-2A	1.043 (26.49) 1.019 (25.88)	0.812 (20.62)	0.719 (18.26)	0.136 (3.45) 0.120 (3.05)	0.202 (5.13) 0.186 (4.72)
13	.8750-.1P-.3L-TS-2A	1.138 (28.91) 1.114 (28.30)	0.906 (23.01)	0.812 (20.62)	0.136 (3.45) 0.120 (3.05)	0.202 (5.13) 0.186 (4.72)
15	1.0000-.1P-.3L-TS-2A	1.232 (31.29) 1.208 (30.68)	0.969 (24.61)	0.906 (23.01)	0.136 (3.45) 0.120 (3.05)	0.181 (4.60) 0.165 (4.19)
17	1.1875-.1P-.3L-TS-2A	1.323 (33.60) 1.299 (32.99)	1.062 (26.97)	0.969 (24.61)	0.136 (3.45) 0.120 (3.05)	0.202 (5.13) 0.186 (4.72)
19	1.2500-.1P-.3L-TS-2A	1.449 (36.80) 1.425 (36.20)	1.156 (29.36)	1.062 (26.97)	0.136 (3.45) 0.120 (3.05)	0.202 (5.13) 0.186 (4.72)
21	1.3750-.1P-.3L-TS-2A	1.575 (40.00) 1.551 (39.40)	1.250 (31.75)	1.156 (29.36)	0.136 (3.45) 0.120 (3.05)	0.202 (5.13) 0.186 (4.72)
23	1.5000-.1P-.3L-TS-2A	1.701 (43.21) 1.677 (42.60)	1.375 (34.92)	1.250 (31.75)	0.162 (4.11) 0.146 (3.71)	0.250 (6.35) 0.234 (5.94)
25	1.6250-.1P-.3L-TS-2A	1.823 (46.30) 1.799 (45.69)	1.500 (38.10)	1.375 (34.92)	0.162 (4.11) 0.146 (3.71)	0.250 (6.35) 0.234 (5.94)

Panel Cut-Out Dimensions			
SHELL SIZE	ø K MIN	ø L HOLES	M
9	0.656 (16.66)	0.133 (3.38) 0.123 (3.12)	0.724 (18.39) 0.714 (18.14)
11	0.781 (19.84)	0.133 (3.38) 0.123 (3.12)	0.817 (20.75) 0.807 (20.50)
13	0.921 (23.39)	0.133 (3.38) 0.123 (3.12)	0.911 (23.14) 0.901 (22.89)
15	1.047 (26.59)	0.133 (3.38) 0.123 (3.12)	0.973 (24.71) 0.963 (24.46)
17	1.218 (30.94)	0.133 (3.38) 0.123 (3.12)	1.067 (27.10) 1.057 (26.85)
19	1.296 (32.92)	0.133 (3.38) 0.123 (3.12)	1.161 (29.49) 1.151 (29.24)
21	1.421 (36.09)	0.133 (3.38) 0.123 (3.12)	1.255 (31.88) 1.245 (31.62)
23	1.546 (39.27)	0.159 (4.04) 0.149 (3.78)	1.380 (35.05) 1.370 (34.80)
25	1.672 (42.47)	0.159 (4.04) 0.149 (3.78)	1.505 (38.23) 1.495 (37.97)

Panel Thickness			
Code	G DIM, OAL	H DIM, MAX	J DIM, PANEL
-01	1.670 (42.42) MAX	0.960 (24.38)	.250/.062 (6.35/ 1.57)
-02	1.780 (45.21) MAX	1.090 (27.69)	.375/.062 (9.52/ 1.57)
-03	2.030 (51.56) MAX	1.340 (34.04)	.625/.062 (15.88/ 1.57)

© 2018 Glenair, Inc • 1211 Air Way, Glendale, CA 91201 • 818-247-6000 • www.glenair.com • U.S. CAGE code 06324 • SuperNine® Catalog
Dimensions in Inches (millimeters) are subject to change without notice.

Rev. 06.15.22

SuperNine® Glass seal hermetic

MIL-DTL-38999 Series III Type

233-284 Bulkhead feed-thru with thermocouple contacts

233-284-H7 JAM-NUT FEED-THRU CONNECTOR

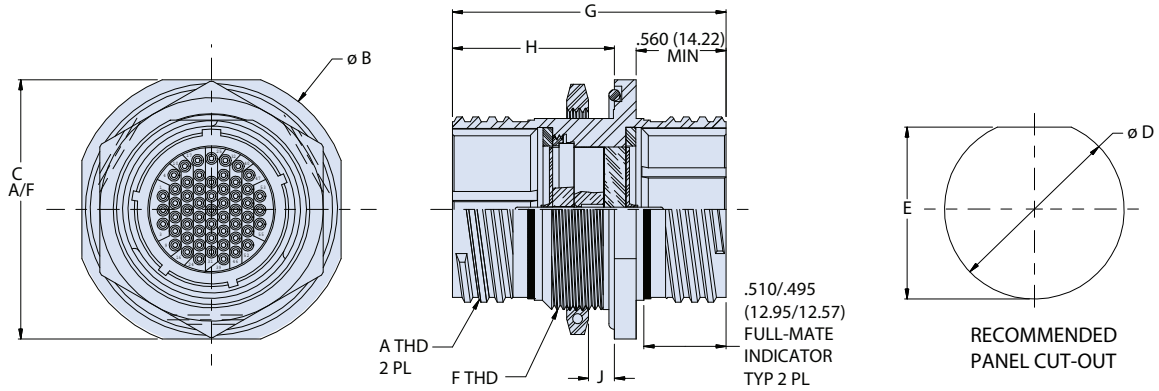

Dimensions						
SHELL SIZE	A THREAD 0.1P-0.3L-TS-2	B DIA	C	D DIA	E DIM	F THREAD METRIC
9	0.6250	1.189 (30.20)	1.063 (27.00)	.703 (17.86) .693 (17.60)	.661 (16.79) .655 (16.64)	M17 X 1.0-6g
11	0.7500	1.375 (34.92)	1.252 (31.80)	.835 (21.21) .825 (20.96)	.771 (19.58) .761 (19.33)	M20 X 1.0-6g
13	0.8750	1.500 (38.10)	1.374 (34.90)	1.020 (25.91) 1.010 (25.65)	.955 (24.26) .945 (24.00)	M25 X 1.0-6g
15	1.0000	1.626 (41.30)	1.500 (38.10)	1.145 (29.08) 1.135 (28.83)	1.085 (27.56) 1.075 (27.30)	M28 X 1.0-6g
17	1.1875	1.752 (44.50)	1.626 (41.30)	1.270 (32.26) 1.260 (32.00)	1.210 (30.73) 1.200 (30.48)	M32 X 1.0-6g
19	1.2500	1.937 (49.20)	1.811 (46.00)	1.395 (35.43) 1.385 (35.18)	1.335 (33.91) 1.325 (33.65)	M35 X 1.0-6g
21	1.3750	2.063 (52.40)	1.937 (49.20)	1.520 (38.61) 1.510 (38.35)	1.460 (37.08) 1.450 (36.83)	M38 X 1.0-6g
23	1.5000	2.189 (55.60)	2.063 (52.40)	1.645 (41.78) 1.635 (41.53)	1.585 (40.26) 1.575 (40.00)	M41 X 1.0-6g
25	1.6250	2.311 (58.70)	2.189 (55.60)	1.770 (44.96) 1.760 (44.70)	1.710 (43.43) 1.700 (43.18)	M44 X 1.0-6g

Panel Thickness			
Code	G DIM, OAL	H DIM, MAX	J DIM, PANEL
-01	1.600 (40.64)	.843 (21.41)	.125/.062 (3.17/1.57)
-02	1.730 (43.94)	1.040 (26.42)	.250/.062 (6.35/1.57)
-03	2.000 (50.80)	1.290 (32.77)	.500/.062 (12.70/1.57)

© 2018 Glenair, Inc • 1211 Air Way, Glendale, CA 91201 • 818-247-6000 • www.glenair.com • U.S. CAGE code 06324 • SuperNine® Catalog
Dimensions in Inches (millimeters) are subject to change without notice.

SuperNine® Glass seal hermetic

MIL-DTL-38999 Series III Type

233-284 Bulkhead feed-thru with thermocouple contacts

233-284-DH7 DUAL O-RING, JAM-NUT FEED-THRU CONNECTOR

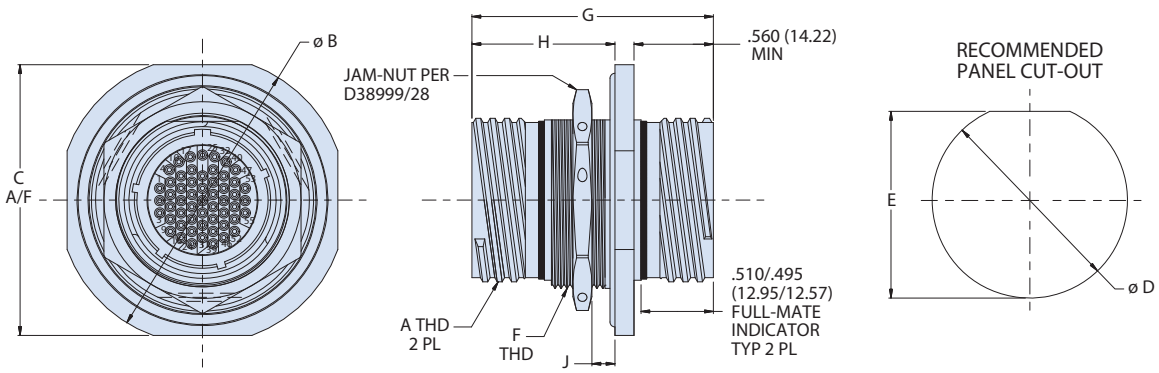

Dimensions						
SHELL SIZE	A THREAD .1P-.3L-TS-2A	ø B MAX	C MAX	Panel Cut-out Dimensions ø D	Panel Cut-out Dimensions E DIM	F THREAD METRIC 0.100R
9	0.6250	1.500 (38.10)	1.375 (34.92)	.703 (17.86) .693 (17.60)	.661 (16.79) .655 (16.64)	M17 X 1.0-6g
11	0.7500	1.625 (41.28)	1.500 (38.10)	.835 (21.21) .825 (20.96)	.771 (19.58) .761 (19.33)	M20 X 1.0-6g
13	0.8750	1.752 (44.50)	1.626 (41.30)	1.020 (25.91) 1.010 (25.65)	.955 (24.26) .945 (24.00)	M25 X 1.0-6g
15	1.0000	1.937 (49.20)	1.811 (46.00)	1.145 (29.08) 1.135 (28.83)	1.085 (27.56) 1.075 (27.30)	M28 X 1.0-6g
17	1.1875	2.063 (52.40)	1.937 (49.20)	1.270 (32.26) 1.260 (32.00)	1.210 (30.73) 1.200 (30.48)	M32 X 1.0-6g[6]
19	1.2500	2.189 (55.60)	2.063 (52.40)	1.395 (35.43) 1.385 (35.18)	1.335 (33.91) 1.325 (33.65)	M35 X 1.0-6g
21	1.3750	2.311 (58.70)	2.189 (55.60)	1.520 (38.61) 1.510 (38.35)	1.460 (37.08) 1.450 (36.83)	M38 X 1.0-6g
23	1.5000	2.500 (63.50)	2.300 (58.42)	1.645 (41.78) 1.635 (41.53)	1.585 (40.26) 1.575 (40.00)	M41 X 1.0-6g
25	1.6250	2.625 (66.68)	2.400 (60.96)	1.770 (44.96) 1.760 (44.70)	1.710 (43.43) 1.700 (43.18)	M44 X 1.0-6g

Panel Thickness			
Code	G DIM, OAL	H DIM, MAX	J DIM, PANEL
-01	1.670 (42.42) MAX	0.980 (24.89)	.125/.062 (3.17/ 1.57)
-02	1.780 (45.21) MAX	1.090 (27.69)	.250/.062 (6.35/ 1.57)
-03	2.030 (51.56) MAX	1.340 (34.04)	.500/.062 (12.70/ 1.57)

© 2018 Glenair, Inc • 1211 Air Way, Glendale, CA 91201 • 818-247-6000 • www.glenair.com • U.S. CAGE code 06324 • SuperNine® Catalog
Dimensions in Inches (millimeters) are subject to change without notice.

Rev. 06.15.22

SuperNine® Glass seal hermetic

MIL-DTL-38999 Series III Type

233-284 Bulkhead feed-thru with thermocouple contacts

233-284-H8 WELD MOUNT FEED-THRU CONNECTOR

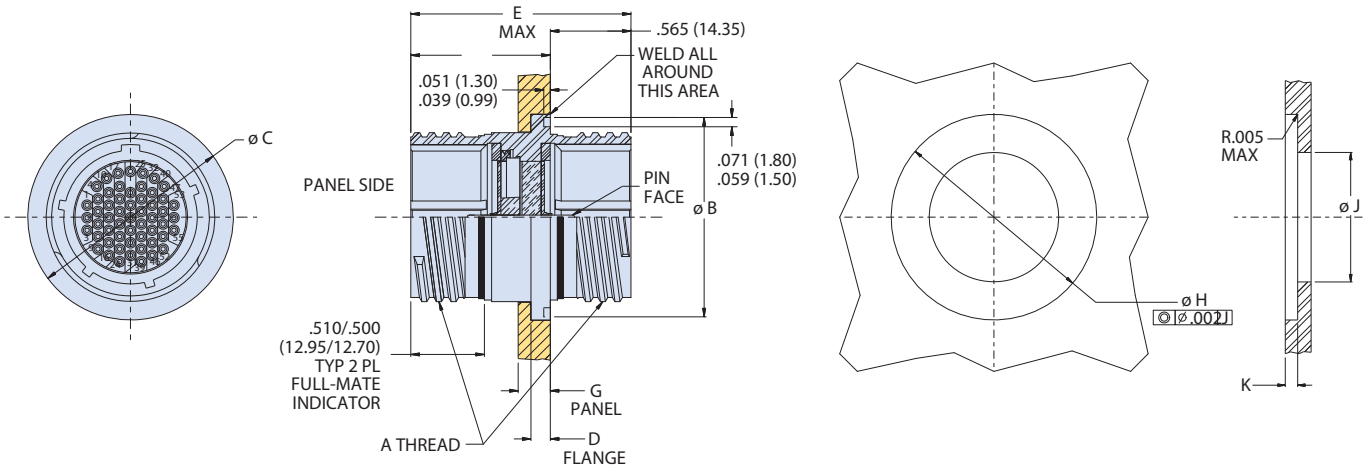

Dimensions					
SHELL SIZE CODE	SHELL SIZE	A THREAD	ø B	ø C	D
A	9	.6250-.1P-.3L-TS-2A	0.941 (23.90) 0.929 (23.60)	0.984 (24.99) 0.972 (24.69)	0.134 (3.40) 0.118 (3.00)
B	11	.7500-.1P-.3L-TS-2A	1.063 (27.00) 1.051 (26.70)	1.106 (28.09) 1.094 (27.79)	0.134 (3.40) 0.118 (3.00)
C	13	.8750-.1P-.3L-TS-2A	1.189 (30.20) 1.177 (29.90)	1.232 (31.29) 1.220 (30.99)	0.134 (3.40) 0.118 (3.00)
D	15	1.0000-.1P-.3L-TS-2A	1.315 (33.40) 1.303 (33.10)	1.358 (34.49) 1.346 (34.19)	0.134 (3.40) 0.118 (3.00)
E	17	1.1875-.1P-.3L-TS-2A	1.402 (35.61) 1.390 (35.31)	1.445 (36.70) 1.433 (36.40)	0.134 (3.40) 0.118 (3.00)
F	19	1.2500-.1P-.3L-TS-2A	1.547 (39.29) 1.535 (38.99)	1.591 (40.41) 1.579 (40.11)	0.134 (3.40) 0.118 (3.00)
G	21	1.3750-.1P-.3L-TS-2A	1.689 (42.90) 1.677 (42.60)	1.732 (43.99) 1.720 (43.69)	0.134 (3.40) 0.118 (3.00)
H	23	1.5000-.1P-.3L-TS-2A	1.854 (47.09) 1.842 (46.79)	1.898 (48.21) 1.886 (47.90)	0.165 (4.19) 0.149 (3.78)
J	25	1.6250-.1P-.3L-TS-2A	1.941 (49.30) 1.929 (49.00)	1.984 (50.39) 1.972 (50.09)	0.165 (4.19) 0.149 (3.78)

Recommended Panel Cutout			
SHELL SIZE	ø H	ø J ±.005 (0.13)	DEPTH K ±.005 (0.13)
9	.990 (25.15) .985 (25.02)	0.635 (16.13)	0.126 (3.20)
11	1.112 (28.24) 1.107 (28.12)	0.760 (19.30)	0.126 (3.20)
13	1.238 (31.45) 1.233 (31.32)	0.885 (22.48)	0.126 (3.20)
15	1.364 (34.65) 1.359 (34.52)	1.010 (25.65)	0.126 (3.20)
17	1.451 (36.86) 1.446 (36.73)	1.195 (30.35)	0.126 (3.20)
19	1.597 (40.56) 1.592 (40.44)	1.260 (32.00)	0.126 (3.20)
21	1.738 (44.15) 1.733 (44.02)	1.385 (35.18)	0.126 (3.20)
23	1.894 (48.11) 1.899 (48.23)	1.510 (38.35)	0.157 (3.99)
25	1.990 (50.55) 1.985 (50.42)	1.635 (41.53)	0.157 (3.99)

Panel Thickness			
Code	E Dim, OAL	F Dim, Max	G Dim, Panel
-01	1.670 (42.42) Max	1.090 (27.69)	.510/.175
-02	1.780 (45.21) Max	1.200 (30.48)	.625/.175
-03	2.030 (51.56) Max	1.450 (36.83)	.870/.175

© 2018 Glenair, Inc • 1211 Air Way, Glendale, CA 91201 • 818-247-6000 • www.glenair.com • U.S. CAGE code 06324 • SuperNine® Catalog
Dimensions in Inches (millimeters) are subject to change without notice.

SuperNine® Glass seal hermetic

MIL-DTL-38999 Series III Type

233-103-H9 Bulkhead SAV-CON feed-thru

Part Number Development							
Sample Part Number	**233-103**	**-H9**	**Z1**	**17-35**	**S**	**N**	**-02**
Series / Basic Part No.	Series 23 SuperNine Hermetic Bulkhead SAV-CON Feed-thru						
Connector Style	**H9** = Jam Nut Mount, Gender Changer						
Finish*	**Z1** = CRES, Passivated **ZL** = CRES, Nickel Finish						
Shell Size-Insert Arrangement*	Per MIL-DTL-38999/MIL-STD-1560						
Contact Type	**P** = Pin on panel side **S** = Socket on panel side						
Polarization*	**A**, **B**, **C**, **D**, **E**, **N** = Normal						
Panel Thickness	**01**, **02**, **03**; See panel thickness table per connector style. Consult factory for additional options.						

***Refer to Section A for complete details, consult factory for additional options**
Modification codes may be added directly to the end of any valid part number



Hermetic Leak Rate Mod Codes	
Designator	**Required Leak Rate**
-585A	1 x 10^{-5}cc Helium per second
-585B	1 x 10^{-6}cc Helium per second
-585C	1 x 10^{-8}cc Helium per second

NOTES

1. For PP or SS style, only symmetrical layouts may be selected. Power to a given contact on one end will result in power to contact directly opposite, regardless of identification letter.
2. Glenair 233-103-H9 will mate with any QPL manufacturer's 38999 Series III plug or receptacle of same shell size, polarization and opposite contact gender.
3. Hermeticity: less than 1 x 10^{-7} ccHe/sec at 1 atmosphere differential.
4. Electrical safety limits must be established by user. Peak voltage, switching surge, transient, etc should be used to determine safe application

Material / Finish

- Shell and jam-nut: CRES/passivate or CRES/nickel plate
- Contacts pin: nickel/iron alloy/gold plate
- Contacts sockets: copper alloy/gold plate insulator
- Insulator hermetic: vitreous glass/N.A
- Insulator socket: rigid dielectric/N.A
- Seals: fluorosilicone blend/N.A.

© 2022 Glenair, Inc • 1211 Air Way, Glendale, CA 91201 • 818-247-6000 • www.glenair.com • U.S. CAGE code 06324 • SuperNine® Catalog
Dimensions in Inches (millimeters) are subject to change without notice.

Rev. 06.09.23

SuperNine® Glass seal hermetic

MIL-DTL-38999 Series III Type

233-103 Bulkhead SAV-CON feed-thru

233-103-H9 JAM-NUT MOUNT GENDER CHANGER

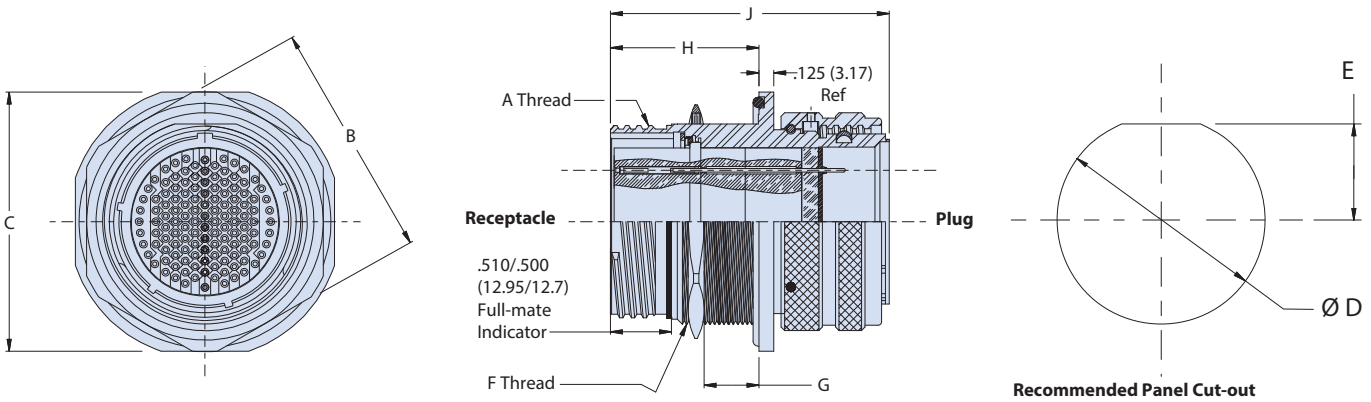

Dimensions						
SHELL SIZE	A THREAD	B MAX	C DIM MAX	D DIA	E	F THREAD
9	.6250 0.1 P-0.3L-TS-2	.945(24.0)	1.09 (27.7)	0.703 (17.9) 0.693 (17.6)	0.661 (16.8) 0.653 (16.6)	M17X1-6G-0.100R
11	.7500 0.1 P-0.3L-TS-2	1.063(27.0)	1.28 (32.5)	0.835 (21.2) 0.825 (21.0)	0.771 (19.6) 0.761 (19.3)	M20X1-6G-0.100R
13	.8750 0.1 P-0.3L-TS-2	1.260(32.0)	1.40 (35.6)	1.020 (25.9) 1.010 (25.7)	0.955 (24.3) 0.945 (24.0)	M25X1-6G-0.100R
15	1.0000 0.1 P-0.3L-TS-2	1.417(36.0)	1.53 (38.9)	1.145 (29.1) 1.135 (28.8)	1.085 (27.6) 1.075 (27.3)	M28X1-6G-0.100R
17	1.1875 0.1 P-0.3L-TS-2	1.457(37.0)	1.66 (42.2)	1.270 (32.3) 1.260 (32.0)	1.210 (30.7) 1.200 (30.5)	M32X1-6G-0.100R
19	1.2500 0.1 P-0.3L-TS-2	1.614(41.0)	1.84 (46.7)	1.395 (35.4) 1.385 (35.2)	1.335 (33.9) 1.325 (33.7)	M35X1-6G-0.100R
21	1.3750 0.1 P-0.3L-TS-2	1.811(46.0)	1.97 (50.5)	1.520 (38.6) 1.510 (38.4)	1.460 (37.1) 1.450 (36.8)	M38X1-6G-0.100R
23	1.5000 0.1 P-0.3L-TS-2	1.968(50.0)	2.09 (53.1)	1.645 (41.8) 1.635 (41.5)	1.585 (40.3) 1.575 (40.0)	M41X1-6G-0.100R
25	1.6250 0.1 P-0.3L-TS-2	2.017(51.2)	2.21 (56.1)	1.770 (45.0) 1.760 (44.7)	1.710 (43.4) 1.700 (43.2)	M44X1-6G-0.100R

Panel Thickness			
DASH NO.	G	H MAX	J MAX
-01	.062 - .125 (1.6 - 3.2)	.890 (22.6)	2.000 (50.8)
-02	.062 - .250 (1.6 - 6.4)	1.150 (29.2)	2.225 (56.5)
-03	.062 - .500 (1.6 - 12.7)	1.400 (35.6)	2.450 (62.2)

DWV Voltage Levels at Sea Level	
SERVICE RATING	VOLTAGE AC RMS 60HR
M	1300 VAC
I	1800 VAC
II	2300 VAC
N	1000 VAC

© 2022 Glenair, Inc • 1211 Air Way, Glendale, CA 91201 • 818-247-6000 • www.glenair.com • U.S. CAGE code 06324 • SuperNine® Catalog
Dimensions in Inches (millimeters) are subject to change without notice.

SuperNine® Glass seal hermetic

MIL-DTL-38999 Series III Type

233-284-H9 SAV-CON feed-thru with Thermocouple Contacts

Part Number Development								
Sample Part Number	**233-284**	**-H9**	**Z1**	**17-35**	**K**	**1**	**N**	**-02**
Series / Basic Part No.	Series 23 SuperNine Hermetic Bulkhead SAV-CON Feed-thru							
Connector Style	**H9** = Jam Nut Mount, Gender Changer							
Finish* (See Note 2)	**Z1** = CRES, Passivated **ZL** = CRES, Nickel Finish							
Shell Size-Insert Arrangement*	Per MIL-DTL-38999/MIL-STD-1560							
Contact Style	**E**, **J**, **K**, **T**							
Pairs of T/C	See note 4							
Polarization*	**A**, **B**, **C**, **D**, **E**, **N** = Normal							
Panel Thickness	**01**, **02**, **03**; See panel thickness table per connector style							

***Refer to Section A for complete details, consult factory for additional options**
Modification codes may be added directly to the end of any valid part number



Hermetic Leak Rate Mod Codes	
Designator	**Required Leak Rate**
-585A	1 x 10^{-10}cc Helium per second
-585B	1 x 10^{-9}cc Helium per second
-585C	1 x 10^{-8}cc Helium per second

NOTES

1. Glenair 233-284-H9 is available as pin-to-pin only
2. Glenair 233-284-H9 will mate with any QPL manufacturer's 38999 Series III plug or receptacle of same shell size, polarization and opposite contact gender.
3. Application range is for thermocouple, not the connector. Connector temperature range is -85° to +392°F
4. All thermocouple contact pairs will begin at contact #1 (A) as "+", and 2 (B) as "-". Each additional pair of thermocouple contacts will repeat sequentailly I.E.: 1&2 (A&B); 3&4 (C&D), etc
5. DWV: per table DWV voltage levels table
6. Hermeticity: less than 1 x 10^{-7} ccHe/sec at 1 atmosphere differential.

Material/Finish

- Shell and jam-nut:
  Z1 = 300 Series CRES/Passivated
  ZL = 300 Series CRES/nickel plated
- Contact, pins - thermocouple = per P/N development/JP = cadmium; TP=gold flash; balance = none;
  non-thermocouple = nickel alloy/gold plated
- Insulator, hermetic = Fused vitreous glass/none
- Spacers, pins: rigid dielectric/none
- Seals & o-rings: fluorosilicone/none

© 2022 Glenair, Inc • 1211 Air Way, Glendale, CA 91201 • 818-247-6000 • www.glenair.com • U.S. CAGE code 06324 • SuperNine® Catalog
Dimensions in Inches (millimeters) are subject to change without notice.

SuperNine® Glass seal hermetic

MIL-DTL-38999 Series III Type

233-284-H9 SAV-CON feed-thru with Thermocouple Contacts

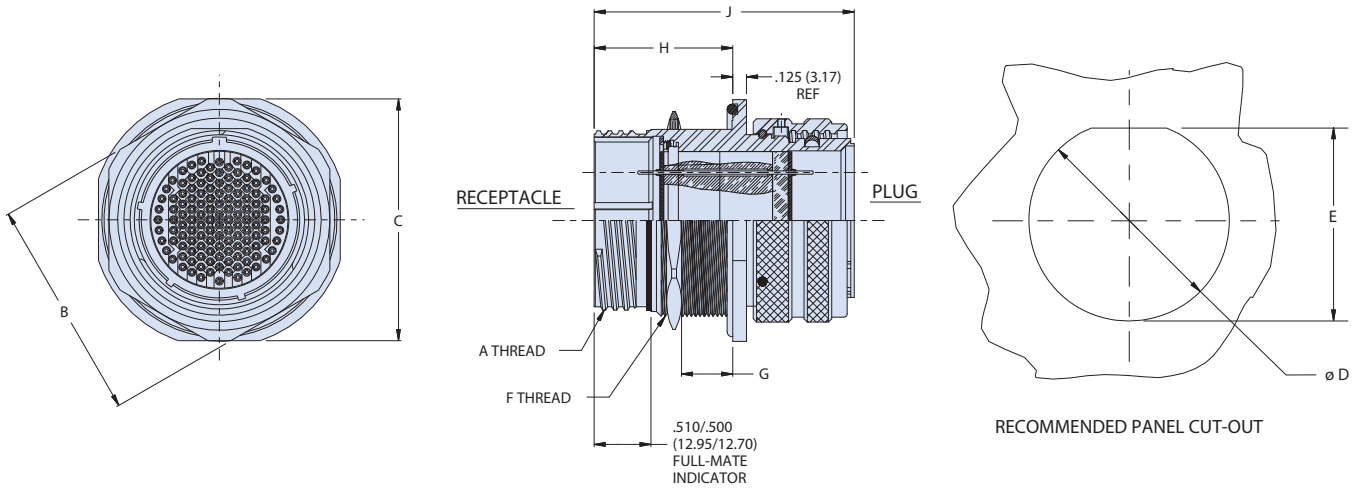

Dimensions						
SHELL SIZE	A THREAD 0.1P-0.3L-TS-2	B MAX	C DIM MAX	D DIA	E DIM	F THREAD
9	0.6250	0.945 (24.00)	1.09 (27.69)	.703 (17.86) .693 (17.60)	.661 (16.79) .655 (16.64)	M17X1-6g 0.100R
11	0.7500	1.063 (27.00)	1.28 (32.51)	.835 (21.21) .825 (20.96)	.771 (19.58) .761 (19.33)	M20X1-6g 0.100R
13	0.8750	1.260 (32.00)	1.40 (35.56)	1.020 (25.91) 1.010 (25.65)	.955 (24.26) .945 (24.00)	M25X1-6g 0.100R
15	1.0000	1.417 (35.99)	1.53 (38.86)	1.145 (29.08) 1.135 (28.83)	1.085 (27.56) 1.075 (27.30)	M28X1-6g 0.100R
17	1.1875	1.457 (37.01)	1.66 (42.16)	1.270 (32.26) 1.260 (32.00)	1.210 (30.73) 1.200 (30.48)	M32X1-6g 0.100R
19	1.2500	1.614 (41.00)	1.84 (46.74)	1.395 (35.43) 1.385 (35.18)	1.335 (33.91) 1.325 (33.65)	M35X1-6g 0.100R
21	1.3750	1.811 (46.00)	1.97 (50.04)	1.520 (38.61) 1.510 (38.35)	1.460 (37.08) 1.450 (36.83)	M38X1-6g 0.100R
23	1.5000	1.968 (49.99)	2.09 (53.09)	1.645 (41.78) 1.635 (41.53)	1.585 (40.26) 1.575 (40.00)	M41X1-6g 0.100R
25	1.6250	2.017 (51.23)	2.21 (56.13)	1.770 (44.96) 1.760 (44.70)	1.710 (43.43) 1.700 (43.18)	M44X1-6g 0.100R

Panel Thickness			
DASH NO.	G	H MAX	J MAX
-01	.062 - .125 (1.6 - 3.2)	.890 (22.6)	2.000 (50.8)
-02	.062 - .250 (1.6 - 6.4)	1.150 (29.2)	2.225 (56.5)
-03	.062 - .500 (1.6 - 12.7)	1.400 (35.6)	2.450 (62.2)

DWV Voltage Levels at Sea Level	
SERVICE RATING	VOLTAGE AC RMS 60HR
M	1300 VAC
I	1800 VAC
II	2300 VAC
N	1000 VAC

© 2022 Glenair, Inc • 1211 Air Way, Glendale, CA 91201 • 818-247-6000 • www.glenair.com • U.S. CAGE code 06324 • SuperNine® Catalog
Dimensions in Inches (millimeters) are subject to change without notice.



LIGHTWEIGHT, LOW RESISTANCE

CODE RED

"Mission-Critical" hermetic sealing with 1X10^{-7} leak-rate performance

Hermetically-sealed interconnects used in vacuum or high-altitude applications prevent moisture and other contaminants from damaging sensitive electronic equipment. Glass-to-metal hermetic sealing has been the gold standard in the aerospace and petrochemical industries for decades due to the strength and long-term durability of the materials used. But glass-to-metal seal hermetics come with a big price tag in both weight and electrical resistance.

CODE RED is an innovative sealing encapsulant and application process—invented by Glenair—that provides durable hermetic sealing in a lightweight aluminum package. CODE RED allows for the use of conventional gold-plated copper alloy contacts, significantly improving electrical performance. CODE RED hermetic connectors are available now in Glenair SuperNine® (D38999 Series III type), Series 80 Mighty Mouse, and M24308 D-Sub. These connectors deliver reliable, life-of-system 1X10^{-7} max leak-rate hermetic sealing and special non-magnetic (zero residual magnetism) versions are also available, consult factory.

- **Full hermetic sealing, with 1X10^{-7} in a lightweight aluminum shell and low electrical resistance, gold-plated copper contacts**
- **Meets NASA aerospace temperature and corrosion resistance standards.**
- **Meets ASTM-E595 outgassing requirements when ordered with modification code 683**
- **Operating temperature -65°C to +200°C**
- **Available today in Mighty Mouse 806 Mil-Aero, M24308/9 D-Sub and D38999/23 glass-to-metal seal hermetics**
- **Significant weight savings—up to +50%**
- **Order-of-magnitude improvement in current carrying capacity and electrical resistance compared to Kovar/ Inconel solutions**

ADVANCED PERFORMANCE

SuperNine® Lightweight hermetic

MIL-DTL-38999 Series III Type

"Mission-Critical" hermetic sealng solution

CODE RED LIGHTWEIGHT HERMETIC CONNECTOR TESTING AND VALIDATION

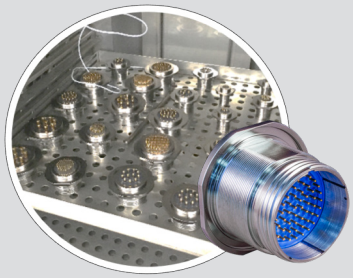

Connectors utilizing CODE RED hermetic encapsulant sealing went through a grueling qualification test and validation process to prove material durability and hermeticity. Validation testing including 100 cycles of thermal shock IAW EIA-364-32 Test Condition A -65°C to +200°C while maintaining hermeticity followed by 1000 hours of thermal aging at 200°C. Additional tests included:

- DWV, DWV at altitude
- IR, IR at temperature
- Highly Accelerated Life Testing (HALT)
- Insert and contact retention
- Mating durability
- Random vibration at temperature IAW MIL-DTL-38999
- Hermetic seal at 30 psi

The entire qualification test cycle was repeated successfully a second time with new parts to validate complete reliability.

CODE RED USES PROVEN-PERFORMANCE CONNECTOR AND CONTACT MATERIALS

CODE RED Materials / Finish	
Sealing Adhesive	Proprietary Glenair compound
Contacts*	Gold-plated beryllium copper alloy per ASTM B 197 or equivalent
Insulator	Rigid plastic
Seals	Blended fluorosilicone/ silicone elastomer
Receptacle Shell and Jam Nut*	Aluminum alloy 6061-T6 per ASTM B 221
Finish*	Electroless nickel per ASTM B 733

*zero residual magnetism materials also available

Percentage Weight Savings CODE RED vs. Glass-to-Metal MIL-DTL-38999 Sr. III	
Shell Size/Insert Arr.	**Weight Reduction**
9-35	52%
11-98	47%
13-35	47%
15-97	42%
19-32	40%
21-11	32%
23-21	28%
25-08	43%

Graph illustrates Current Carrying Capacity of CODE RED copper alloy contacts compared to the Inconel, Kovar, and nickel iron contacts used in conventional glass-to-metal seal hermetics.

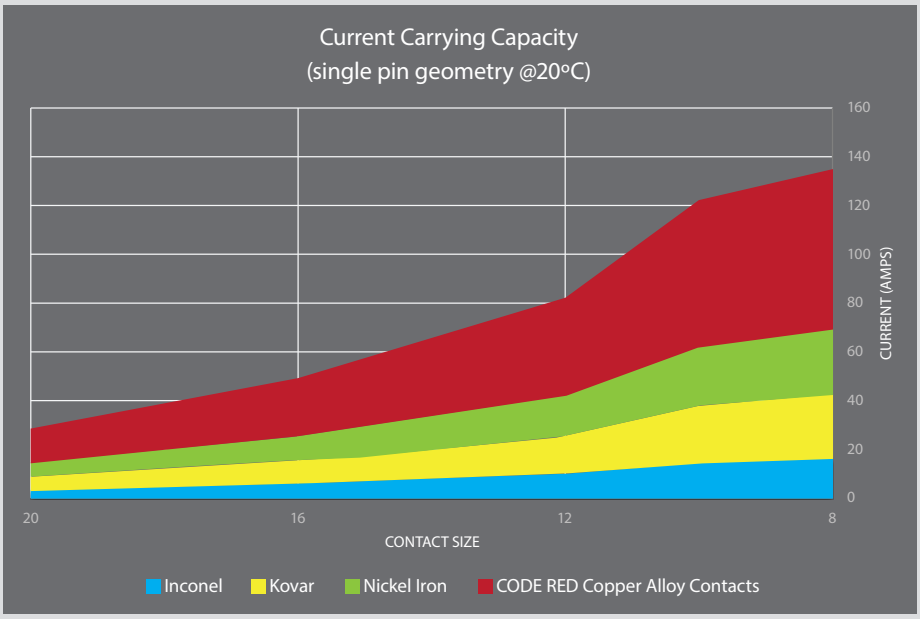

APPLICATION NOTES: CODE RED is a viable drop-in solution for conventional glass-to-metal seal hermetic connectors with the following exceptions:

1. Fuel Cells: Although CODE RED exhibits outstanding resistance to caustic chemicals and fuels, its use in fuel tanks/fuel cell applications is not recommended.

2. Cryogenics: CODE RED has been tested and qualified to -65°C IAW MIL-DTL-38999

3. Sustained High-Operating Temperatures: CODE RED has been tested and qualified to a maximum +200°C IAW MIL-DTL-38999

4. High Radiation: Exposure to no more than 6 Megarads of radiation

5. Deep Subsea: CODE RED is ideally suited for aerospace and downhole applications that do not exceed 2 BAR (30 psi) atmospheric pressure differential.

6. Life Support Systems: Requires additional qualification testing not yet performed by Glenair.

© 2022 Glenair, Inc • 1211 Air Way, Glendale, CA 91201 • 818-247-6000 • www.glenair.com • U.S. CAGE code 06324 • SuperNine® Catalog
Dimensions in Inches (millimeters) are subject to change without notice.

SuperNine® Lightweight hermetic

MIL-DTL-38999 Series III Type

233-250 Wall mount or jam-nut receptacle, PC tails or solder cup

Part Number Development							
Sample Part Number	**233-250**	**-00**	**ME**	**17**	**-35**	**P**	**N**
Series / Basic Part No.	Series 23 SuperNine jam-nut mount CODE RED hermetic receptacle						
Connector Style	**00** = Receptacle, wall mount with slotted holes **D0** = Receptacle, wall mount with round holes **Omit** = Receptacle, jam nut mount						
Material/Finish	**AB** = Marine Bronze, None (Clean Only), -65°C to +200°C **MA** = Aluminum Alloy, Electroless Nickel, Matte Finish, -65°C to +200°C **ME** = Aluminum Alloy, Electroless Nickel, -65°C to +200°C **NF** = Aluminum Alloy, Cad/O.D. Over Electroless Nickel, -65°C to +175°C **ZN** = Aluminum Alloy, Zinc Nl, Olive Drab, -65°C to +175°C **ZR** = Aluminum Alloy, Zinc Nl, Black (Tri-Valent CR), -65°C to +175°C						
Shell Size	Per MIL-DTL-38999 Series III						
Insert Arrangement	Per MIL-STD-1560						
Contact Style	**C** = Pin, PC tail **D** = Socket, PC tail **P** = Pin, solder cup **S** = Socket, solder cup						
Alternate Polarization	**A**, **B**, **C**, **D**, **E**, **N** = Normal; see section A for key position details						

***Refer to Section A for complete details, consult factory for additional options**
Modification codes may be added directly to the end of any valid part number

**Inactive For New Design

NOTES

1. Glenair environmental connectors are designed to mate with any QPL manufacturer's MIL-DTL-38999, series III mating plug having the same shell size, insert arrangment, opposite contact gender and polarization.
2. Connectors meet all applicable dimensions, mechanical, electrical, environmental and sealing requirements of MIL-DTL-38999/23, PC tails.
3. Performance
   - Operation temperature range: -65°C to +200°C
   - Leak Rate: 1 x 10^{-7} cc/s max helium, 1 ATM
   - IR: 5,000 megohms min at room temperature per MIL-DTL-38999
   - DWV: see service rating per applicable MIL-STD-1560 arrangements

Material/Finish

- Shell and jam-nuts: see Material/Finish in Part Number Development
- Insulators: high grade rigid dielectric
- O-ring and Seals: fluorosilicone
- Contacts: copper alloy/gold plated
- Sealing compound: polymer encapsulant

WALL MOUNT PANEL CUTOUTS

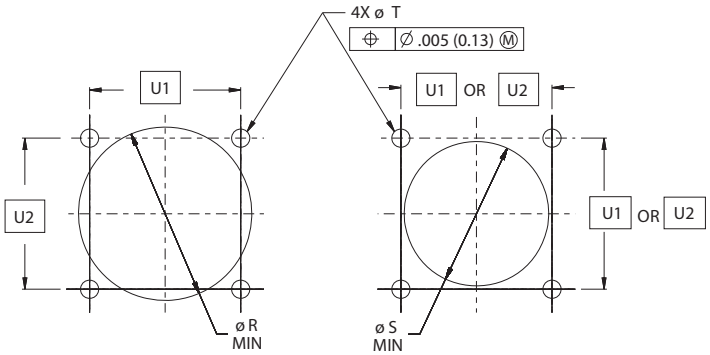

Recommended Mounting Holes for Wall and Box Mount Receptacles						
Shell Size Code	**Shell Size**	**ø R Min**	**ø S Min**	**ø T Holes**	**U1 BSC**	**U2 BSC**
A	09	0.656 (16.66)	0.516 (13.11)	0.133 (3.38) 0.123 (3.12)	0.719 (18.26)	0.594 (15.09)
B	11	0.796 (20.22)	0.625 (15.88)		0.812 (20.62)	0.719 (18.26)
C	13	0.922 (23.42)	0.750 (19.05)		0.906 (23.01)	0.812 (20.62)
D	15	1.047 (26.59)	0.906 (23.01)		0.969 (24.61)	0.906 (23.01)
E	17	1.219 (30.96)	1.016 (25.81)		1.062 (26.97)	0.969 (24.61)
F	19	1.297 (32.94)	1.141 (28.98)		1.156 (29.36)	1.062 (26.97)
G	21	1.422 (36.12)	1.266 (32.16)		1.250 (31.75)	1.156 (29.36)
H	23	1.547 (39.29)	1.375 (34.92)	0.159 (4.04) 0.149 (3.78)	1.375 (34.92)	1.250 (31.75)
J	25	1.672 (42.47)	1.484 (37.69)	0.155 (3.94) 0.145 (3.68)	1.500 (38.10)	1.375 (34.92)

© 2022 Glenair, Inc • 1211 Air Way, Glendale, CA 91201 • 818-247-6000 • www.glenair.com • U.S. CAGE code 06324 • SuperNine® Catalog
Dimensions in Inches (millimeters) are subject to change without notice.

Rev. 02.06.24

SuperNine® Lightweight hermetic

MIL-DTL-38999 Series III Type

233-250 Wall mount or jam-nut receptacle, PC tails or solder cup

233-250-00 WALL MOUNT RECEPTACLE WITH SLOTTED HOLES

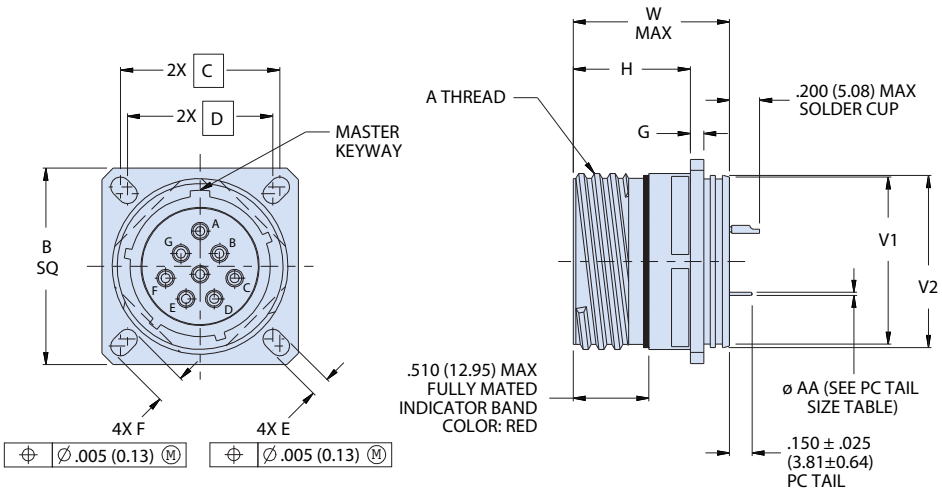

PC Tail Size	
Contact Size	øAA
22D	.020 (0.51) .018 (0.46)
20	.030 (0.76) .028 (0.71)
16	.040 (1.02) .038 (0.97)
12	.072 (1.83) .070 (1.78)

Dimensions											
Shell Size Code	Shell Size	A Thread	B SQ	C BSC	D BSC	E	F	G	H	øV1 ±.012	øV2 ±.012 -.000	W Max
A	09	.6250-.1P-.3L-TS-2A	0.949 (24.10) 0.925 (23.50)	0.719 (18.26)	0.594 (15.09)	0.136 (3.45) 0.120 (3.05)	0.224 (5.69) 0.208 (5.28)	0.098 (2.49) 0.083 (2.11)	0.820 (20.83) 0.771 (19.58)	0.602 (15.29)	0.642 (16.31)	1.280 (32.51)
B	11	.7500-.1P-.3L-TS-2A	1.043 (26.49) 1.019 (25.88)	.812 (20.62)	0.719 (18.26)		0.202 (5.13) 0.186 (4.72)			0.724 (18.39)	0.764 (19.41)	
C	13	.8750-.1P-.3L-TS-2A	1.138 (28.91) 1.114 (28.30)	.906 (23.01)	0.812 (20.62)					0.850 (21.59)	0.894 (22.71)	
D	15	1.0000-.1P-.3L-TS-2A	1.232 (31.29) 1.208 (30.68)	.969 (24.61)	0.906 (23.01)		0.181 (4.60) 0.165 (4.19)			0.976 (24.79)	1.020 (25.91)	
E	17	1.1875-.1P-.3L-TS-2A	1.323 (33.60) 1.299 (32.99)	1.062 (26.97)	0.969 (24.61)		0.202 (5.13) 0.186 (4.72)			1.102 (27.99)	1.142 (29.01)	
F	19	1.2500-.1P-.3L-TS-2A	1.449 (36.80) 1.425 (36.20)	1.156 (29.36)	1.062 (26.97)					1.228 (31.19)	1.268 (32.21)	
G	21	1.3750-.1P-.3L-TS-2A	1.575 (40.00) 1.551 (39.40)	1.250 (31.75)	1.156 (29.36)			0.126 (3.20) 0.083 (2.11)	0.790 (20.07) 0.741 (18.82)	1.350 (34.29)	1.394 (35.41)	
H	23	1.5000-.1P-.3L-TS-2A	1.701 (43.21) 1.677 (42.60)	1.375 (34.92)	1.250 (31.75)	0.162 (4.11) 0.146 (3.71)	0.250 (6.35) 0.234 (5.94)			1.476 (37.49)	1.520 (38.61)	
J	25	1.6250-.1P-.3L-TS-2A	1.823 (46.30) 1.799 (45.69)	1.500 (38.10)	1.375 (34.92)					1.602 (40.69)	1.642 (41.71)	

© 2022 Glenair, Inc • 1211 Air Way, Glendale, CA 91201 • 818-247-6000 • www.glenair.com • U.S. CAGE code 06324 • SuperNine® Catalog
Dimensions in Inches (millimeters) are subject to change without notice.

SuperNine® Lightweight hermetic

MIL-DTL-38999 Series III Type

233-250 Wall mount or jam-nut receptacle, PC tails or solder cup

233-250-D0 WALL MOUNT RECEPTACLE WITH STANDARD HOLES

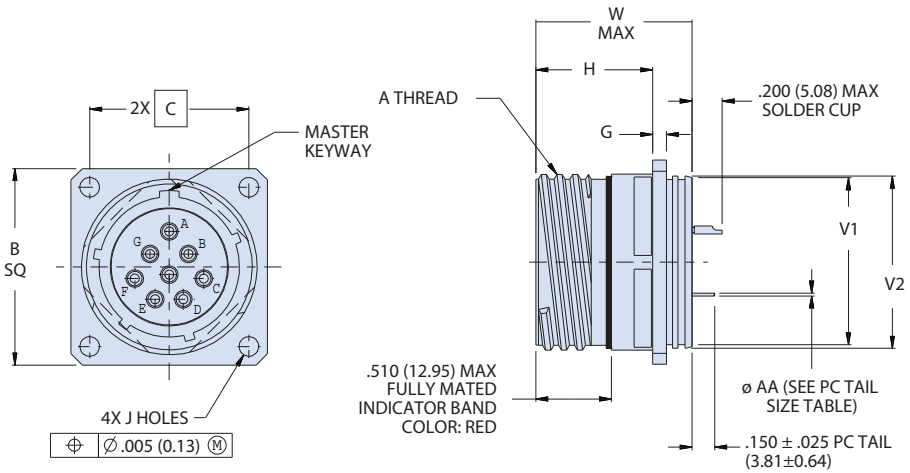

PC Tail Size	
Contact Size	øAA
22D	.020 (0.51) .018 (0.46)
20	.030 (0.76) .028 (0.71)
16	.040 (1.02) .038 (0.97)
12	.072 (1.83) .070 (1.78)

Dimensions										
Shell Size Code	Shell Size	A Thread	B SQ	C BSC	G	H	øJ Holes	øV1 ±.012	øV2 ±.012 -.000	W Max
A	09	.6250-.1P-.3L-TS-2A	0.949 (24.10) 0.925 (23.50)	0.719 (18.26)	0.098 (2.49) 0.083 (2.11)	0.820 (20.83) 0.771 (19.58)	0.136 (3.45) 0.120 (3.05)	0.602 (15.29)	0.642 (16.31)	1.280 (32.51)
B	11	.7500-.1P-.3L-TS-2A	1.043 (26.49) 1.019 (25.88)	.812 (20.62)				0.724 (18.39)	0.764 (19.41)	
C	13	.8750-.1P-.3L-TS-2A	1.138 (28.91) 1.114 (28.30)	.906 (23.01)				0.850 (21.59)	0.894 (22.71)	
D	15	1.0000-.1P-.3L-TS-2A	1.232 (31.29) 1.208 (30.68)	.969 (24.61)				0.976 (24.79)	1.020 (25.91)	
E	17	1.1875-.1P-.3L-TS-2A	1.323 (33.60) 1.299 (32.99)	1.062 (26.97)				1.102 (27.99)	1.142 (29.01)	
F	19	1.2500-.1P-.3L-TS-2A	1.449 (36.80) 1.425 (36.20)	1.156 (29.36)				1.228 (31.19)	1.268 (32.21)	
G	21	1.3750-.1P-.3L-TS-2A	1.575 (40.00) 1.551 (39.40)	1.250 (31.75)	0.126 (3.20) 0.083 (2.11)	0.790 (20.07) 0.741 (18.82)		1.350 (34.29)	1.394 (35.41)	
H	23	1.5000-.1P-.3L-TS-2A	1.701 (43.21) 1.677 (42.60)	1.375 (34.92)			0.162 (4.11) 0.146 (3.71)	1.476 (37.49)	1.520 (38.61)	
J	25	1.6250-.1P-.3L-TS-2A	1.823 (46.30) 1.799 (45.69)	1.500 (38.10)				1.602 (40.69)	1.642 (41.71)	

© 2022 Glenair, Inc • 1211 Air Way, Glendale, CA 91201 • 818-247-6000 • www.glenair.com • U.S. CAGE code 06324 • SuperNine® Catalog
Dimensions in Inches (millimeters) are subject to change without notice.

Rev. 02.06.24

SuperNine® Lightweight hermetic

MIL-DTL-38999 Series III Type

233-250 Jam-nut receptacle, PC tails or solder cup

233-250 JAM NUT MOUNT RECEPTACLE

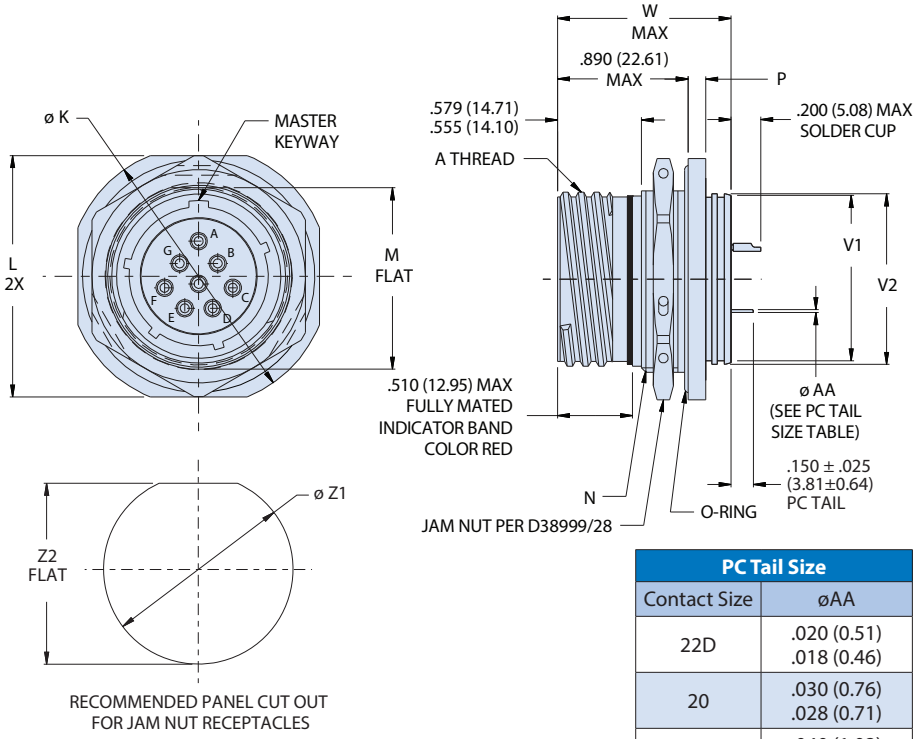

PC Tail Size	
Contact Size	øAA
22D	.020 (0.51) .018 (0.46)
20	.030 (0.76) .028 (0.71)
16	.040 (1.02) .038 (0.97)
12	.072 (1.83) .070 (1.78)

Panel Cut-Out Dimensions for Jam Nut Receptacles			
Shell Size Code	Shell Size	ø Z1	Z2 Flat
A	09	0.703 (17.86) 0.693 (17.60)	0.661 (16.79) 0.654 (16.61)
B	11	0.835 (21.21) 0.825 (20.96)	0.771 (19.58) 0.761 (19.33)
C	13	1.020 (25.91) 1.010 (25.65)	0.955 (24.26) 0.945 (24.00)
D	15	1.145 (29.08) 1.135 (28.83)	1.085 (27.56) 1.075 (27.30)
E	17	1.270 (32.26) 1.260 (32.00)	1.210 (30.73) 1.200 (30.48)
F	19	1.395 (35.43) 1.385 (35.18)	1.335 (33.91) 1.325 (33.65)
G	21	1.520 (38.61) 1.510 (38.35)	1.460 (37.08) 1.450 (36.83)
H	23	1.645 (41.78) 1.635 (41.53)	1.585 (40.26) 1.575 (40.00)
J	25	1.770 (44.96) 1.760 (44.70)	1.710 (43.43) 1.700 (43.18)

Dimensions										
Shell Size Code	Shell Size	A Thread	øK	L	M Flat	N Thread	P	øV1 ±.012	øV2 ±.012 -.000	W Max
A	09	.6250-.1P-.3L-TS-2A	1.200 (30.48) 1.178 (29.92)	1.078 (27.38) 1.048 (26.62)	0.654 (16.61) 0.645 (16.38)	M17 X 1.0-6g 0.100R	.122 (3.10) .083 (2.11)	0.602 (15.29)	0.642 (16.31)	1.280 (32.51)
B	11	.7500-.1P-.3L-TS-2A	1.386 (35.20) 1.362 (34.59)	1.268 (32.21) 1.236 (31.39)	0.755 (19.18) 0.745 (18.92)	M20 X 1.0-6g 0.100R		0.724 (18.39)	0.764 (19.41)	
C	13	.8750-.1P-.3L-TS-2A	1.512 (38.40) 1.488 (37.80)	1.390 (35.31) 1.358 (34.49)	0.942 (23.93) 0.932 (23.67)	M25 X 1.0-6g 0.100R		0.850 (21.59)	0.894 (22.71)	
D	15	1.0000-.1P-.3L-TS-2A	1.638 (41.61) 1.614 (41.00)	1.516 (38.51) 1.484 (37.69)	1.066 (27.08) 1.056 (26.82)	M28 X 1.0-6g 0.100R		0.976 (24.79)	1.020 (25.91)	
E	17	1.1875-.1P-.3L-TS-2A	1.764 (44.81) 1.740 (44.20)	1.642 (41.71) 1.610 (40.89)	1.191 (30.25) 1.181 (30.00)	M32 X 1.0-6g 0.100R		1.102 (27.99)	1.142 (29.01)	
F	19	1.2500-.1P-.3L-TS-2A	1.949 (49.50) 1.925 (48.90)	1.827 (46.41) 1.795 (45.59)	1.316 (33.43) 1.306 (33.17)	M35 X 1.0-6g 0.100R	.153 (3.89) .114 (2.90)	1.228 (31.19)	1.268 (32.21)	
G	21	1.3750-.1P-.3L-TS-2A	2.075 (52.71) 2.051 (52.10)	1.953 (49.61) 1.921 (48.79)	1.441 (36.60) 1.431 (36.35)	M38 X 1.0-6g 0.100R		1.350 (34.29)	1.394 (35.41)	
H	23	1.5000-.1P-.3L-TS-2A	2.201 (55.91) 2.177 (55.30)	2.079 (52.81) 2.047 (51.99)	1.566 (39.78) 1.556 (39.52)	M41 X 1.0-6g 0.100R		1.476 (37.49)	1.520 (38.61)	
J	25	1.6250-.1P-.3L-TS-2A	2.323 (59.00) 2.299 (58.39)	2.205 (56.01) 2.173 (55.19)	1.691 (42.95) 1.681 (42.70)	M44 X 1.0-6g 0.100R		1.602 (40.69)	1.642 (41.71)	

© 2022 Glenair, Inc • 1211 Air Way, Glendale, CA 91201 • 818-247-6000 • www.glenair.com • U.S. CAGE code 06324 • SuperNine® Catalog
Dimensions in Inches (millimeters) are subject to change without notice.

Rev. 02.06.24

SuperNine® Lightweight hermetic

MIL-DTL-38999 Series III Type

233-251 Jam-nut mount, bulkhead feed-thru

Part Number Development									
Sample Part Number	**233-251-07**	**ME**	**17**	**-8**	**P**	**N**	**S**	**N**	**-02**
Series / Basic Part No.	Series 23 SuperNine jam-nut CODE RED hermetic receptacle								
Material/Finish*	**ME** = Aluminum alloy 6061-T6, electroless nickel								
Shell Size*	Per MIL-DTL-38999 Series III								
Insert Arrangement*	Per MIL-STD-1560								
Contact Style (Panel Side)	**P** = Pin, gold, 500 cycles **S** = Socket, gold, 500 cycles								
Polarization* (Panel Side)	**A**, **B**, **C**, **D**, **E**, **N** = Normal; see section A for key position details								
Contact Style (Flange Side)	**P** = Pin, gold, 500 cycles **S** = Socket, gold, 500 cycles								
Polarization* (Flange Side)	**A**, **B**, **C**, **D**, **E**, **N** = Normal; see section A for key position details								
Panel Accommodation	**02**; See panel accommodation table for details								

***Refer to Section A for complete details, consult factory for additional options**
Modification codes may be added directly to the end of any valid part number

Dimensions							
Shell Size Code	Shell Size	A Thread 0.1P-0.3L-TS-2A	ØB	C Sq	D Flat	E Thread ISO Metric	F
A	9	.6250	1.200 (30.48) 1.178 (29.92)	1.078 (27.38) 1.048 (26.62)	.654 (16.61) .645 (16.38)	M17 X 1.0-6g	.122 (3.10) .083 (2.11)
B	11	.7500	1.386 (35.20) 1.362 (34.59)	1.268 (32.21) 1.236 (31.39)	.755 (19.18) .745 (18.92)	M20 X 1.0-6g	
C	13	.8750	1.512 (38.40) 1.488 (37.80)	1.390 (35.31) 1.358 (34.49)	.942 (23.93) .932 (23.67)	M25 X 1.0-6g	
D	15	1.0000	1.638 (41.61) 1.614 (41.00)	1.516 (38.51) 1.484 (37.69)	1.066 (27.08) 1.056 (26.82)	M28 X 1.0-6g	
E	17	1.1875	1.764 (44.81) 1.740 (44.20)	1.642 (41.71) 1.610 (40.89)	1.191 (30.25) 1.181 (30.00)	M32 X 1.0-6g	
F	19	1.2500	1.949 (49.50) 1.925 (48.90)	1.827 (46.41) 1.795 (45.59)	1.316 (33.43) 1.306 (33.17)	M35 X 1.0-6g	.153 (3.89) .114 (2.90)
G	21	1.3750	2.075 (52.71) 2.051 (52.10)	1.953 (49.61) 1.921 (48.79)	1.441 (36.60) 1.431 (36.35)	M38 X 1.0-6g	
H	23	1.5000	2.201 (55.91) 2.177 (55.30)	2.079 (52.81) 2.047 (51.99)	1.566 (39.78) 1.556 (39.52)	M41 X 1.0-6g	
J	25	1.6250	2.323 (59.00) 2.299 (58.39)	2.205 (56.01) 2.173 (55.19)	1.691 (42.95) 1.681 (42.70)	M44 X 1.0-6g	

Panel Accommodation			
Sym	Panel Thickness	G Max	H Max
02	.250 (6.35) .062 (1.57)	1.090 (27.69)	1.78 (45.21)

© 2022 Glenair, Inc • 1211 Air Way, Glendale, CA 91201 • 818-247-6000 • www.glenair.com • U.S. CAGE code 06324 • SuperNine® Catalog
Dimensions in Inches (millimeters) are subject to change without notice.

SuperNine® Lightweight hermetic

MIL-DTL-38999 Series III Type

233-251 Jam-nut mount, bulkhead feed-thru

CODE RED

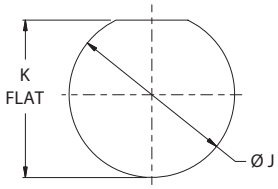

RECOMMENDED PANEL CUT-OUT

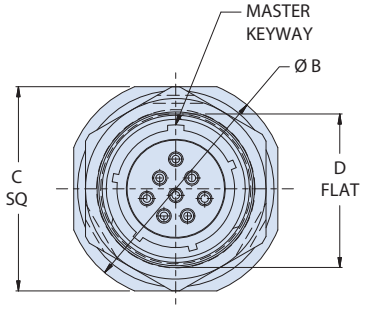

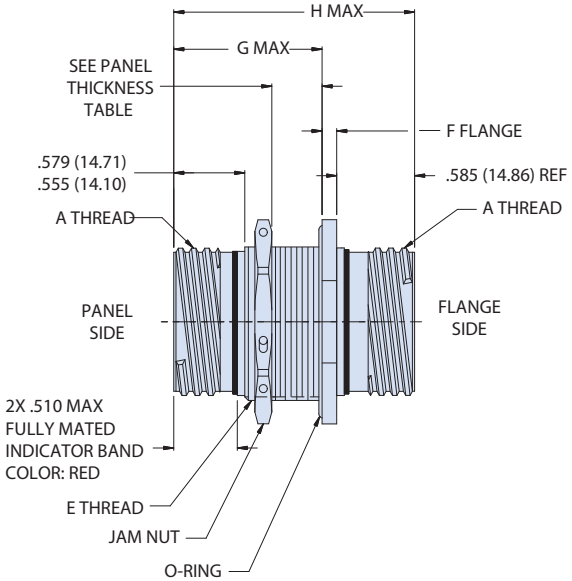

Panel Cut-out Dimensions			
Shell Size Code	Shell Size	ØJ	K Flat
A	9	.703 (17.86) .693 (17.60)	.661 (16.79) .654 (16.61)
B	11	.835 (21.21) .825 (20.96)	.771 (19.58) .761 (19.33)
C	13	1.020 (25.91) 1.010 (25.65)	.955 (24.26) .945 (24.00)
D	15	1.145 (29.08) 1.135 (28.83)	1.085 (27.56) 1.075 (27.30)
E	17	1.270 (32.26) 1.260 (32.00)	1.210 (30.73) 1.200 (30.48)
F	19	1.395 (35.43) 1.385 (35.18)	1.335 (33.91) 1.325 (33.65)
G	21	1.520 (38.61) 1.510 (38.35)	1.460 (37.08) 1.450 (36.83)
H	23	1.645 (41.78) 1.635 (41.53)	1.585 (40.26) 1.575 (40.00)
J	25	1.770 (44.96) 1.760 (44.70)	1.710 (43.43) 1.700 (43.18)

NOTES

1. Connector is designed to meets all applicable mechanical dimensional, electrical, and environmental and sealing requirements of MIL-DTL-38999, D38999/23, and MIL-STD-1560 except as shown and/or noted. Insert arrangement in accordance with MIL-STD-1560. Contact manufacturer for available arrangement options
2. For pin/pin configuration, symmetrical layout only, Consult factory for available insert arrangements and for availability of socket/socket configuration
3. Power to a given contact on one end will result in power to a contact directly opposite, regardless of identification letter
4. Electrical safety limits must be established by user. Peak voltage switching surge, transient, etc should be used to determine the safety application
5. Sealing compound employed has been tested and meets applicable requirements of MIL-DTL-38999/23 class N and Y. See Glenair test report GT-16-223
6. Performance
   - Operation temperature Range: -65°C to +200°C
   - Leak Rate: 1 x 10^{-7} cc/s max helium, 1 ATM
   - IR: 5,000 megohms min at room temperature per MIL-DTL-38999
   - DWV: see service rating per applicable MIL-STD-1560 arrangements
   - Dimensions shown comply with applicable MIL-DTL-38999/23

Material/Finish

- Shell and jam-nut: aluminum alloy 6061-T6/nickel plate per D38999 series III, Class F
- Insulators: high grade rigid dielectric/ N.A.
- O-ring and Seals: fluorosilicone/N.A.
- Contacts: copper alloy/gold plated
- sealing compound: silicone base polymer

© 2022 Glenair, Inc • 1211 Air Way, Glendale, CA 91201 • 818-247-6000 • www.glenair.com • U.S. CAGE code 06324 • SuperNine® Catalog
Dimensions in Inches (millimeters) are subject to change without notice.

SuperNine® Lightweight hermetic

MIL-DTL-38999 Series III Type

233-252 Jam-nut mount, crimp removable contact

Part Number Development						
Sample Part Number	**233-252-07**	**ME**	**17**	**-8**	**P**	**N**
Series / Basic Part No.	Series 23 SuperNine CODE RED hermetic jam-nut mount receptacle					
Material/Finish*	**ME** = Aluminum alloy 6061-T6, electroless nickel					
Shell Size*	Per MIL-DTL-38999 Series III					
Insert Arrangement*	Per MIL-STD-1560					
Contact Style	**P** = Pin, gold, 500 cycles **S** = Socket, gold, 500 cycles					
Polarization*	**A**, **B**, **C**, **D**, **E**, **N** = Normal; see section A for key position details					

***Refer to Section A for complete details, consult factory for additional options**
Modification codes may be added directly to the end of any valid part number

Dimensions

Shell Size Code	Shell Size	A Thread 0.1P-0.3L-TS-2A	ØB	C Sq	D Flat	E Thread ISO Metric 1.0-6g 0.100R	F	G Thread ISO Metric
A	9	.6250	1.200 (30.48) 1.178 (29.92)	1.078 (27.38) 1.048 (26.62)	.654 (16.61) .645 (16.38)	M17	.122 (3.10) .083 (2.11)	M12 X 1.0-6g 0.100R
B	11	.7500	1.386 (35.20) 1.362 (34.59)	1.268 (32.21) 1.236 (31.39)	.755 (19.18) .745 (18.92)	M20		M15 X 1.0-6g 0.100R
C	13	.8750	1.512 (38.40) 1.488 (37.80)	1.390 (35.31) 1.358 (34.49)	.942 (23.93) .932 (23.67)	M25		M18 X 1.0-6g 0.100R
D	15	1.0000	1.638 (41.61) 1.614 (41.00)	1.516 (38.51) 1.484 (37.69)	1.066 (27.08) 1.056 (26.82)	M28		M22 X 1.0-6g 0.100R
E	17	1.1875	1.764 (44.81) 1.740 (44.20)	1.642 (41.71) 1.610 (40.89)	1.191 (30.25) 1.181 (30.00)	M32		M25 X 1.0-6g 0.100R
F	19	1.2500	1.949 (49.50) 1.925 (48.90)	1.827 (46.41) 1.795 (45.59)	1.316 (33.43) 1.306 (33.17)	M35	.153 (3.89) .114 (2.90)	M28 X 1.0-6g 0.100R
G	21	1.3750	2.075 (52.71) 2.051 (52.10)	1.953 (49.61) 1.921 (48.79)	1.441 (36.60) 1.431 (36.35)	M38		M31 X 1.0-6g 0.100R
H	23	1.5000	2.201 (55.91) 2.177 (55.30)	2.079 (52.81) 2.047 (51.99)	1.566 (39.78) 1.556 (39.52)	M41		M34 X 1.0-6g 0.100R
J	25	1.6250	2.323 (59.00) 2.299 (58.39)	2.205 (56.01) 2.173 (55.19)	1.691 (42.95) 1.681 (42.70)	M44		M37 X 1.0-6g 0.100R

© 2022 Glenair, Inc • 1211 Air Way, Glendale, CA 91201 • 818-247-6000 • www.glenair.com • U.S. CAGE code 06324 • SuperNine® Catalog
Dimensions in Inches (millimeters) are subject to change without notice.

SuperNine® Lightweight hermetic

MIL-DTL-38999 Series III Type

233-252 Jam-nut mount, crimp removable contact

CODE RED

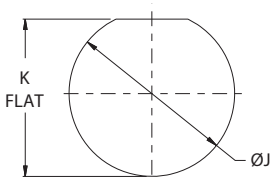

RECOMMENDED PANEL CUT-OUT

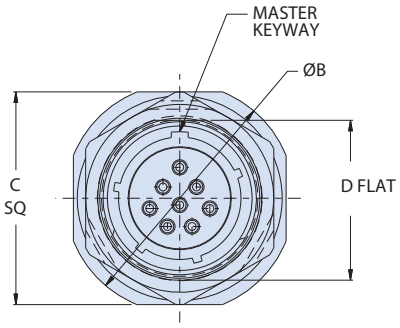

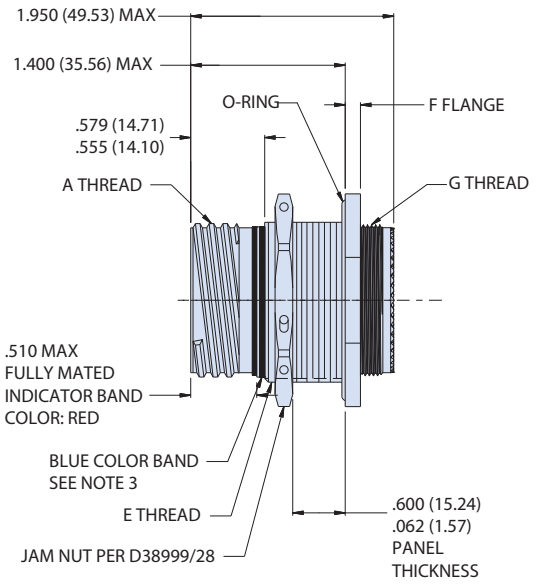

Supplied Socket Contacts	
Size	Contact P/N
22	AS39029/57-354
20	AS39029/57-357
16	AS39029/57-358

Panel Cut-out Dimensions			
Shell Size Code	Shell Size	ØJ	K Flat
A	9	.703 (17.86) .693 (17.60)	.661 (16.79) .655 (16.64)
B	11	.835 (21.21) .825 (20.96)	.771 (19.58) .761 (19.33)
C	13	1.020 (25.91) 1.010 (25.65)	.955 (24.26) .945 (24.00)
D	15	1.145 (29.08) 1.135 (28.83)	1.085 (27.56) 1.075 (27.30)
E	17	1.270 (32.26) 1.260 (32.00)	1.210 (30.73) 1.200 (30.48)
F	19	1.395 (35.43) 1.385 (35.18)	1.335 (33.91) 1.325 (33.65)
G	21	1.520 (38.61) 1.510 (38.35)	1.460 (37.08) 1.450 (36.83)
H	23	1.645 (41.78) 1.635 (41.53)	1.585 (40.26) 1.575 (40.00)
J	25	1.770 (44.96) 1.760 (44.70)	1.710 (43.43) 1.700 (43.18)

NOTES

1. Meets applicable mechanical, dimensional, electrical, environmental and sealing requirements of MIL-DTL-38999, D38999/23, and MIL-STD-1560 except as shown and/or noted.
2. Insert arrangement in accordance with MIL-STD-1560. Contact manufacturer for available arrangement options
3. Blue color band indicates rear release retention system
4. Connector supplied with loose socket contacts (including spares shown in table), insertion/removal tool and sealing plug
5. Sealing compound employed has been tested and meets applicable performance requirements of MIL-DTL-38999/23 See Glenair test report GT-16-223
6. Dimensions shown comply with applicable MIL-DTL-38999/23
7. Performance
   - Operation temperature Range: -65°C to +200°C
   - Leak Rate: 1 x 10^{-7} cc/s max helium, 1 ATM
   - IR: 5,000 megohms min at room temperature per MIL-DTL-38999
   - DWV: see service rating per applicable MIL-STD-1560 arrangements

Material/Finish

- Shell and jam-nuts: aluminum alloy 6061-T6/nickel plate per D38999 series III, Class F
- Insulators: high grade rigid dielectric/ N.A.
- O-ring and seals: fluorosilicone/N.A.
- Contacts: copper alloy/gold plated
- Sealing compound: silicone base polymer

© 2022 Glenair, Inc • 1211 Air Way, Glendale, CA 91201 • 818-247-6000 • www.glenair.com • U.S. CAGE code 06324 • SuperNine® Catalog
Dimensions in Inches (millimeters) are subject to change without notice.

SuperNine® Lightweight hermetic

MIL-DTL-38999 Series III Type

233-253 Jam-nut mount with solder cup and banding porch

Part Number Development								
Sample Part Number	**233-253**	**-M**	**07**	**ME**	**17**	**-8**	**P**	**N**
Series / Basic Part No.	Series 23 SuperNine CODE RED hermetic connector							
Band Style	**M** = Micro Band **N** = Nano Band **S** = Standard Band; see band style table							
Connector Style	**07** = Receptacle, jam nut (D38999/23)							
Material/Finish*	**ME** = Aluminum alloy 6061-T6, electroless nickel							
Shell Size*	Per MIL-DTL-38999 Series III							
Insert Arrangement*	Per MIL-STD-1560							
Contact Style	**P** = Pin, gold, 500 cycles **S** = Socket, gold, 500 cycles							
Polarization*	**A**, **B**, **C**, **D**, **E**, **N** = Normal; see section A for key position details							

***Refer to Section A for complete details, consult factory for additional options**
Modification codes may be added directly to the end of any valid part number

Dimensions							
Shell Size Code	**Shell Size**	**A Thread .1P-.3L-TS-2A**	**Ø B**	**C Sq**	**D Flat**	**E Thread ISO Metric**	**F**
A	9	.6250	1.200 (30.48) 1.178 (29.92)	1.078 (27.38) 1.048 (26.62)	.654 (16.61) .645 (16.38)	M17 X 1.0-6g 0.100R	.122 (3.10) .083 (2.11)
B	11	.7500	1.386 (35.20) 1.362 (34.59)	1.268 (32.21) 1.236 (31.39)	.755 (19.18) .745 (18.92)	M20 X 1.0-6g 0.100R	
C	13	.8750	1.512 (38.40) 1.488 (37.80)	1.390 (35.31) 1.358 (34.49)	.942 (23.93) .932 (23.67)	M25 X 1.0-6g 0.100R	
D	15	1.0000	1.638 (41.61) 1.614 (41.00)	1.516 (38.51) 1.484 (37.69)	1.066 (27.08) 1.056 (26.82)	M28 X 1.0-6g 0.100R	
E	17	1.1875	1.764 (44.81) 1.740 (44.20)	1.642 (41.71) 1.610 (40.89)	1.191 (30.25) 1.181 (30.00)	M32 X 1.0-6g 0.100R	
F	19	1.2500	1.949 (49.50) 1.925 (48.90)	1.827 (46.41) 1.795 (45.59)	1.316 (33.43) 1.306 (33.17)	M35 X 1.0-6g 0.100R	.153 (3.89) .114 (2.90)
G	21	1.3750	2.075 (52.71) 2.051 (52.10)	1.953 (49.61) 1.921 (48.79)	1.441 (36.60) 1.431 (36.35)	M38 X 1.0-6g 0.100R	
H	23	1.5000	2.201 (55.91) 2.177 (55.30)	2.079 (52.81) 2.047 (51.99)	1.566 (39.78) 1.556 (39.52)	M41 X 1.0-6g 0.100R	
J	25	1.6250	2.323 (59.00) 2.299 (58.39)	2.205 (56.01) 2.173 (55.19)	1.691 (42.95) 1.681 (42.70)	M44 X 1.0-6g 0.100R	

NOTES

1. Meets the applicable mechanical, dimensional, electrical, environmental, and sealing requirements of MIL-DTL-38999 Series III, D38999/23, and MIL-STD-1560 except as shown and/or noted. Mates with any QPL manufacturers MIL-DTL-38999, Series III connectors having the same shell size, insert arrangement, opposite contact gender and polarization.
2. Insert arrangement in in accordance with MIL-STD-1560. Contact manufacturer for available arrangement options
3. Dimensions shown comply with applicable MIL-DTL-38999/23
4. Connectors have been tested and meet applicable performance requirements of MIL-DTL-38999, series III, class N and Y. See Glenair test report GT-16-223
5. Performance
   - Operation temperature range: -65°C to +200°C
   - Leak rate: 1 x 10^{-7} cc/s max helium, 1 ATM
   - IR: 5,000 megohms min at room temperature per MIL-DTL-38999
   - DWV: see service rating per applicable MIL-STD-1560 arrangements

© 2022 Glenair, Inc • 1211 Air Way, Glendale, CA 91201 • 818-247-6000 • www.glenair.com • U.S. CAGE code 06324 • SuperNine® Catalog
Dimensions in Inches (millimeters) are subject to change without notice.

SuperNine® Lightweight hermetic

MIL-DTL-38999 Series III Type

233-253 Jam-nut mount with solder cup and bancding porch

CODE RED

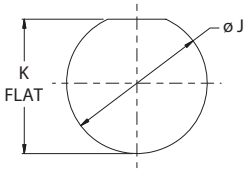

RECOMMENDED PANEL CUT OUT

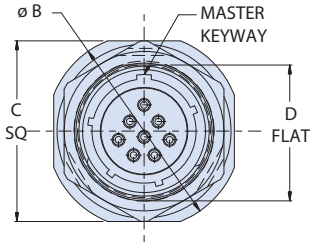

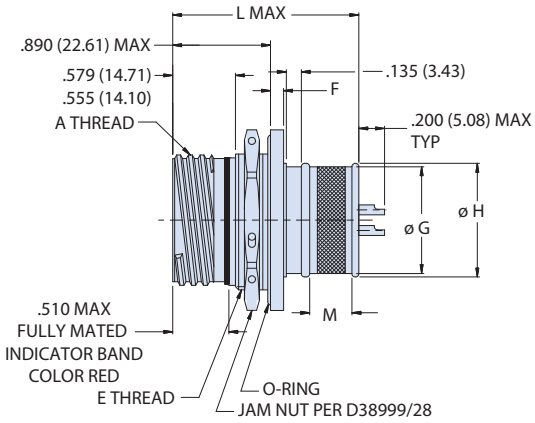

Panel Cut-Out Dimensions			
Shell Size Code	Shell Size	Ø J	K Flat
A	9	.703 (17.86) .693 (17.60)	.661 (16.79) .655 (16.64)
B	11	.835 (21.21) .825 (20.96)	.771 (19.58) .761 (19.33)
C	13	1.020 (25.91) 1.010 (25.65)	.955 (24.26) .945 (24.00)
D	15	1.145 (29.08) 1.135 (28.83)	1.085 (27.56) 1.075 (27.30)
E	17	1.270 (32.26) 1.260 (32.00)	1.210 (30.73) 1.200 (30.48)
F	19	1.395 (35.43) 1.385 (35.18)	1.335 (33.91) 1.325 (33.65)
G	21	1.520 (38.61) 1.510 (38.35)	1.460 (37.08) 1.450 (36.83)
H	23	1.645 (41.78) 1.635 (41.53)	1.585 (40.26) 1.575 (40.00)
J	25	1.770 (44.96) 1.760 (44.70)	1.710 (43.43) 1.700 (43.18)

Integral Backshell Dimensions			
Shell Size Code	Shell Size	ØG	ØH
A	9	0.475	0.538
B	11	0.600	0.662
C	13	0.700	0.762
D	15	0.835	0.898
E	17	0.960	1.022
F	19	1.062	1.125
G	21	1.188	1.250
H	23	1.275	1.338
J	25	1.475	1.538

Band Style Table			
Sym	Description	L Max	M
M	Micro Band	1.450 (36.83)	.190 (4.83)
N	Nano Band	1.410 (35.81)	.145 (3.68)
X	Standard Band	1.780 (45.21)	.380 (9.65)

Material/Finish

- Shell and jam-nut: aluminum alloy 6061-T6/nickel plate per D38999 series III, Class F
- Insulator: high grade rigid dielectric/N.A.
- O-ring and seals: fluorosilicone/N.A.
- Contacts: copper alloy/gold plated
- Sealing compound: silicone base polymer

© 2022 Glenair, Inc • 1211 Air Way, Glendale, CA 91201 • 818-247-6000 • www.glenair.com • U.S. CAGE code 06324 • SuperNine® Catalog
Dimensions in Inches (millimeters) are subject to change without notice.

ADVANCED PERFORMANCE

SuperNine® Lightweight hermetic

MIL-DTL-38999 Series III Type

233-254 Jam-nut mount with PC tail Quadrax contacts

Part Number Development							
Sample Part Number	**233-254**	**-07**	**ME**	**25Q**	**-8**	**P**	**N**
Series / Basic Part No.	Series 23 SuperNine CODE RED hermetic connector						
Connector Style	**07** = Receptacle, jam nut; standard standoff thread **17** = Receptacle, jam nut; metric standoff thread						
Material/Finish*	**ME** = Aluminum alloy 6061-T6, electroless nickel						
Shell Size (See Note 3)	Per MIL-DTL-38999 Series III						
Insert Arrangement*	See optional high-speed arrangements						
Contact Style	**P** = Pin, PC tail **S** = Socket, PC tail						
Polarization*	**A, B, C, D, E, N** = Normal; see section A for key position details						

***Refer to Section A for complete details, consult factory for additional options**
Modification codes may be added directly to the end of any valid part number

CODE RED

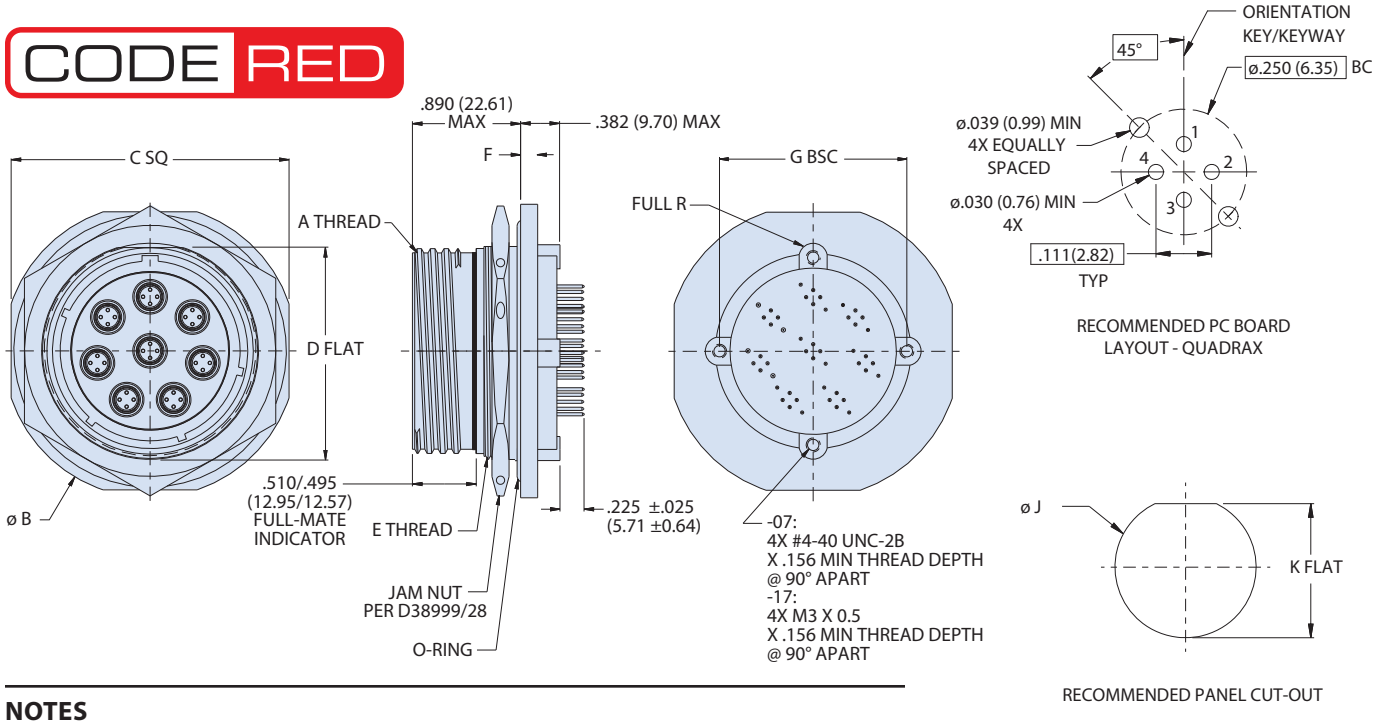

NOTES

1. Meets mechanical, dimensional, electrical, environmental and sealing requirements of MIL-DTL-38999, D38999/23, PC tails
2. Connectors have been tested and meet applicable performance requirements of MIL-DTL-38999/23, series III, class N and Y. See Glenair test report GT-16-223
3. Letter following shell size designates the contact type, Q = Quadrax, PC tail
4. Contact manufacturer for available arrangement options
5. Dimensions comply with applicable MIL-DTL-38999/23
6. Performance
   - Operation temperature Range: -65°C to +200°C
   - Leak Rate: 1 x 10^{-7} cc/s max helium, 1 ATM
7. Electrical parameters (Quadrax)
   - Differential impedance: 100 ohms nominal
   - DWV: 500 VRMS
   - I.R.: 5000 megohms min 200 VDC at room temperature

Material/Finish

- Shell and jam-nut: aluminum alloy 6061-T6/nickel plate per D38999 series III, Class F
- Insulator: high grade rigid dielectric/N.A.
- O-ring and seals: fluorosilicone/N.A.
- Contacts: copper alloy/gold plated
- Sealing compound: silicone base polymer

© 2022 Glenair, Inc • 1211 Air Way, Glendale, CA 91201 • 818-247-6000 • www.glenair.com • U.S. CAGE code 06324 • SuperNine® Catalog
Dimensions in Inches (millimeters) are subject to change without notice.

SuperNine® Lightweight hermetic

MIL-DTL-38999 Series III Type

233-254 Jam-nut mount with PC tail Quadrax Contacts

Dimensions								
Shell Size Code	Shell Size	A Thread .1P-.3L-TS-2A	Ø B	C Sq	D Flat	E Thread ISO Metric 1.0-6g 0.100R	F	G Bsc
A	9	.6250	1.200 (30.48) 1.178 (29.92)	1.078 (27.38) 1.048 (26.62)	.654 (16.61) .645 (16.38)	M17	.122 (3.10) .083 (2.11)	0.594 (15.09)
B	11	.7500	1.386 (35.20) 1.362 (34.59)	1.268 (32.21) 1.236 (31.39)	.755 (19.18) .745 (18.92)	M20		0.719 (18.26)
C	13	.8750	1.512 (38.40) 1.488 (37.80)	1.390 (35.31) 1.358 (34.49)	.942 (23.93) .932 (23.67)	M25		0.812 (20.62)
D	15	1.0000	1.638 (41.61) 1.614 (41.00)	1.516 (38.51) 1.484 (37.69)	1.066 (27.08) 1.056 (26.82)	M28		0.906 (23.01)
E	17	1.1875	1.764 (44.81) 1.740 (44.20)	1.642 (41.71) 1.610 (40.89)	1.191 (30.25) 1.181 (30.00)	M32		1.030 (26.16)
F	19	1.2500	1.949 (49.50) 1.925 (48.90)	1.827 (46.41) 1.795 (45.59)	1.316 (33.43) 1.306 (33.17)	M35	.153 (3.89) .114 (2.90)	1.150 (29.21)
G	21	1.3750	2.075 (52.71) 2.051 (52.10)	1.953 (49.61) 1.921 (48.79)	1.441 (36.60) 1.431 (36.35)	M38		1.221 (31.01)
H	23	1.5000	2.201 (55.91) 2.177 (55.30)	2.079 (52.81) 2.047 (51.99)	1.566 (39.78) 1.556 (39.52)	M41		1.360 (34.54)
J	25	1.6250	2.323 (59.00) 2.299 (58.39)	2.205 (56.01) 2.173 (55.19)	1.691 (42.95) 1.681 (42.70)	M44		1.475 (37.47)

Panel Cut-Out Dimensions			
Shell Size Code	Shell Size	Ø J	K Flat
A	9	.703 (17.86) .693 (17.60)	.661 (16.79) .655 (16.64)
B	11	.835 (21.21) .825 (20.96)	.771 (19.58) .761 (19.33)
C	13	1.020 (25.91) 1.010 (25.65)	.955 (24.26) .945 (24.00)
D	15	1.145 (29.08) 1.135 (28.83)	1.085 (27.56) 1.075 (27.30)
E	17	1.270 (32.26) 1.260 (32.00)	1.210 (30.73) 1.200 (30.48)
F	19	1.395 (35.43) 1.385 (35.18)	1.335 (33.91) 1.325 (33.65)
G	21	1.520 (38.61) 1.510 (38.35)	1.460 (37.08) 1.450 (36.83)
H	23	1.645 (41.78) 1.635 (41.53)	1.585 (40.26) 1.575 (40.00)
J	25	1.770 (44.96) 1.760 (44.70)	1.710 (43.43) 1.700 (43.18)

OPTIONAL HIGH-SPEED QUADRAX INSERT ARRANGEMENTS

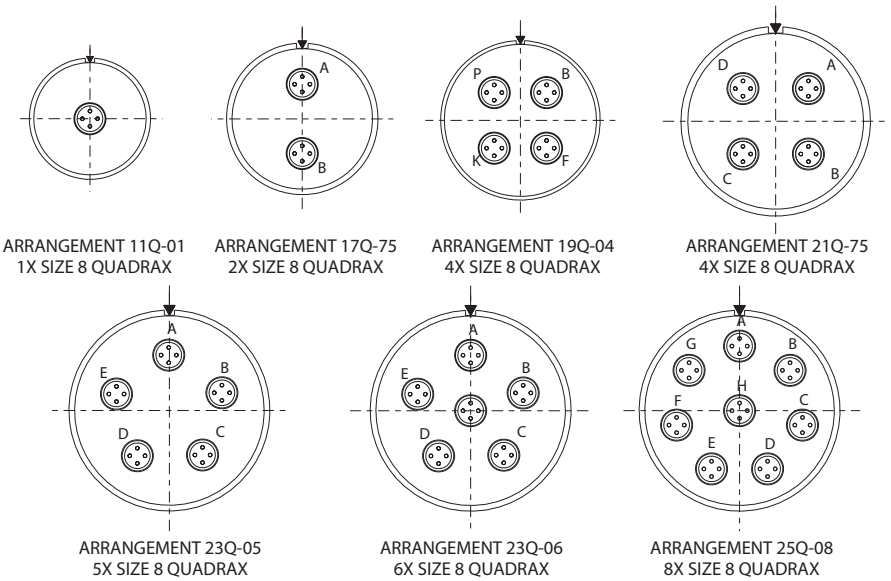

© 2022 Glenair, Inc • 1211 Air Way, Glendale, CA 91201 • 818-247-6000 • www.glenair.com • U.S. CAGE code 06324 • SuperNine® Catalog
Dimensions in Inches (millimeters) are subject to change without notice.

SuperNine® Lightweight hermetic

MIL-DTL-38999 Series III Type

233-255 Jam-nut mount, PC tail with threaded standoffs

Part Number Development							
Sample Part Number	**233-255**	**-07**	**ME**	**17**	**-8**	**C**	**N**
Series / Basic Part No.	Series 23 SuperNine CODE RED hermetic connector						
Connector Style	**07** = Receptacle, jam nut with standard stand off thread **17** = Receptacle, jam-nut with metric stand off thread						
Material/Finish*	**ME** = Aluminum alloy 6061-T6, electroless nickel						
Shell Size*	Per MIL-DTL-38999 Series III						
Insert Arrangement*	Per MIL-STD-1560						
Contact Style	**C** = Pin, PC Tail **D** = Socket, PC Tail						
Polarization*	**A**, **B**, **C**, **D**, **E**, **N** = Normal; see section A for key position details						

***Refer to Section A for complete details, consult factory for additional options**
Modification codes may be added directly to the end of any valid part number

Dimensions								
Shell Size Code	**Shell Size**	**A Thread .1P-.3L-TS-2A**	**Ø B**	**C Sq**	**D Flat**	**E Thread ISO Metric 1.0-6g 0.100R**	**F**	**G Bsc**
A	9	.6250	1.200 (30.48) 1.178 (29.92)	1.078 (27.38) 1.048 (26.62)	.654 (16.61) .645 (16.38)	M17	.122 (3.10) .083 (2.11)	.594 (15.09)
B	11	.7500	1.386 (35.20) 1.362 (34.59)	1.268 (32.21) 1.236 (31.39)	.755 (19.18) .745 (18.92)	M20		.719 (18.26)
C	13	.8750	1.512 (38.40) 1.488 (37.80)	1.390 (35.31) 1.358 (34.49)	.942 (23.93) .932 (23.67)	M25		.812 (20.62)
D	15	1.0000	1.638 (41.61) 1.614 (41.00)	1.516 (38.51) 1.484 (37.69)	1.066 (27.08) 1.056 (26.82)	M28		.906 (23.01)
E	17	1.1875	1.764 (44.81) 1.740 (44.20)	1.642 (41.71) 1.610 (40.89)	1.191 (30.25) 1.181 (30.00)	M32		1.030 (26.16)
F	19	1.2500	1.949 (49.50) 1.925 (48.90)	1.827 (46.41) 1.795 (45.59)	1.316 (33.43) 1.306 (33.17)	M35	.153 (3.89) .114 (2.90)	1.150 (29.21)
G	21	1.3750	2.075 (52.71) 2.051 (52.10)	1.953 (49.61) 1.921 (48.79)	1.441 (36.60) 1.431 (36.35)	M38		1.221 (31.01)
H	23	1.5000	2.201 (55.91) 2.177 (55.30)	2.079 (52.81) 2.047 (51.99)	1.566 (39.78) 1.556 (39.52)	M41		1.360 (34.54)
J	25	1.6250	2.323 (59.00) 2.299 (58.39)	2.205 (56.01) 2.173 (55.19)	1.691 (42.95) 1.681 (42.70)	M44		1.475 (37.47)

NOTES

1. Meets applicable mechanical, dimensional, electrical, environmental and sealing requirements of MIL-DTL-38999, D38999/23, PC tails
2. Insert arrangement in accordance with MIL-STD-1560. Contact manufacturer for available arrangement options
3. Dimensions shown comply with applicable MIL-DTL-38999/23
4. Connectors have been tested and meet applicable performance requirements of MIL-DTL-38999, series III, class N and Y. See Glenair test report GT-16-223
5. Performance
   - Operation temperature Range: -65°C to +200°C
   - Leak Rate: 1 x 10^{-7} cc/s max helium, 1 ATM
   - IR: 5,000 megohms min at room temperature per MIL-DTL-38999
   - DWV: see service rating per applicable MIL-STD-1560 arrangements

© 2022 Glenair, Inc • 1211 Air Way, Glendale, CA 91201 • 818-247-6000 • www.glenair.com • U.S. CAGE code 06324 • SuperNine® Catalog
Dimensions in Inches (millimeters) are subject to change without notice.

SuperNine® Lightweight hermetic

MIL-DTL-38999 Series III Type

233-255 Jam-nut mount, PC tail with threaded standoffs

CODE RED

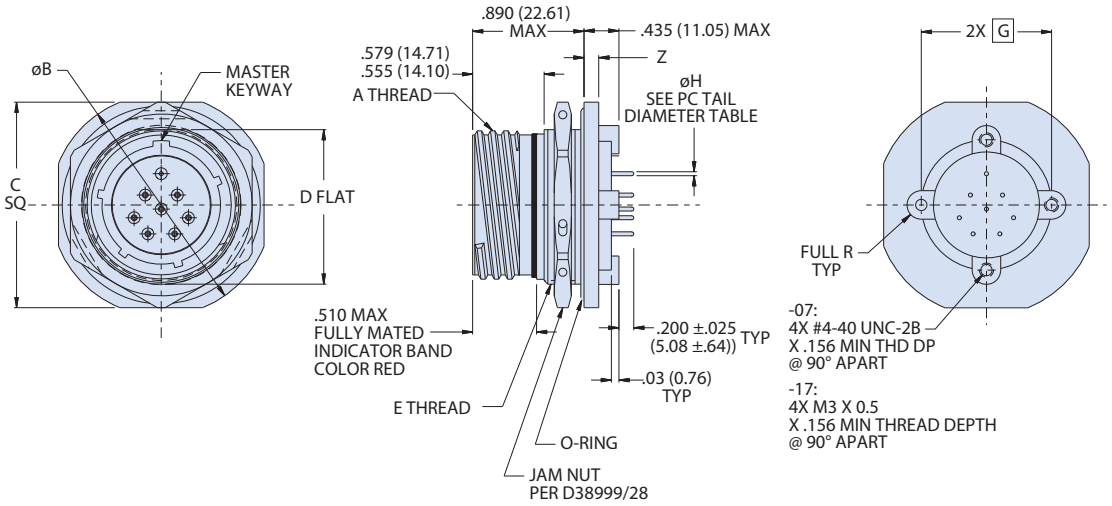

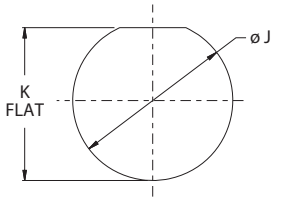

RECOMMENDED PANEL CUT OUT

Panel Mount Dimensions			
Shell Size Code	Shell Size	Ø J	K Flat
A	9	.703 (17.86) .693 (17.60)	.661 (16.79) .655 (16.64)
B	11	.835 (21.21) .825 (20.96)	.771 (19.58) .761 (19.33)
C	13	1.020 (25.91) 1.010 (25.65)	.955 (24.26) .945 (24.00)
D	15	1.145 (29.08) 1.135 (28.83)	1.085 (27.56) 1.075 (27.30)
E	17	1.270 (32.26) 1.260 (32.00)	1.210 (30.73) 1.200 (30.48)
F	19	1.395 (35.43) 1.385 (35.18)	1.335 (33.91) 1.325 (33.65)
G	21	1.520 (38.61) 1.510 (38.35)	1.460 (37.08) 1.450 (36.83)
H	23	1.645 (41.78) 1.635 (41.53)	1.585 (40.26) 1.575 (40.00)
J	25	1.770 (44.96) 1.760 (44.70)	1.710 (43.43) 1.700 (43.18)

PC Tail Diameter Dimensions	
Contact Size	PC Tail ØH
No 23	.020 (0.51) .018 (0.46)
No 22	.020 (0.51) .018 (0.46)
No 20	.030 (0.76) .028 (0.71)
No 16	.040 (1.02) .038 (0.97)
No 12	.072 (1.83) .070 (1.78)

Material/Finish

- Shell and jam-nut: aluminum alloy 6061-T6/nickel plate per D38999 series III, Class F
- Insulator: high grade rigid dielectric/N.A.
- O-ring and seals: fluorosilicone blend/N.A.
- Contacts: copper alloy/gold plated
- Sealing compound: silicone base polymer

© 2022 Glenair, Inc • 1211 Air Way, Glendale, CA 91201 • 818-247-6000 • www.glenair.com • U.S. CAGE code 06324 • SuperNine® Catalog
Dimensions in Inches (millimeters) are subject to change without notice.

SuperNine® Lightweight Hermetic

MIL-DTL-38999 Series III Type

2330-0131 Connector Receptacle, RJ45 to Solder Cup Termination

Part Number Development								
Sample Part Number	**2330-0131**	**NF**	**00**	**-**	**17**	**5**	**N**	**1**
Series / Basic Part No.	Series 23 SuperNine CODE RED hermetic connector							
Material/Finish	**ME** = Aluminum, Electroless Nickel **NF** = Aluminum, Cadmium O. D. Over Electroless Nickel **MA** = Aluminum, Electroless Nickel, Matte Finish **ZN** = Aluminum, Zinc NI , Olive Drab **ZR** = Aluminum, Zinc NI, Black (Tri- Valent CR) **AB**= Marine Bronze, None (Clean Only)							
Connector Style	**00** = Receptacle ,wall mount, with slotted holes **D0** = Receptacle, wall mount, with round holes **07** = Receptacle, jam nut							
Inline Shielded RJ45	**G** = Inline shielded and grounded to the shell **-** = Inline shielded RJ45							
Shell Size	**17**, **19**							
RJ45 Category	**5** = CAT 5e **6A** = CAT 6A							
Alternate Polarization	**A**, **B**, **C**, **D**, **E**, **N** = Normal							
RJ45 Orientation Option	**1**, **2**, **3**, **4**							

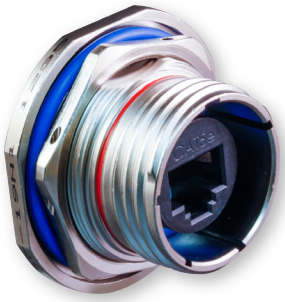

NOTES

1. Material / Finish
   - Shell & Jam Nut: See Table I
   - O-Rings & Seals: Fluorosilicone
   - RJ45 Coupler Housing: UL94V-0 compliant polymer
   - Contacts: Copper alloy / gold plated
   - Sealing Compound: Polymer encapsulant
2. Performances:
   - Leak Rate: 1 X 10^-7 cc/s max helium, 1 ATM
   - Electrical: Current rating: 1.5 AMP
   - D.W.V.: 1000 VDC, 2 mA max
   - I.R.: 500 Mega ohms @ 500 VDC
   - Operating Temperature Range: -40°C to +120°C
3. Glenair connectors are designed to mate with any QPL manufacturer's MIL-DTL-38999, Series III mating plug having the same shell size and polarization, opposite gender RJ45.
4. Receptacle connector designed to meet IP68 unmated condition.
5. Flange gaskets are not included with wall mounted receptacles. If required, select gasket from Glenair drawing 239-204.

© 2022 Glenair, Inc • 1211 Air Way, Glendale, CA 91201 • 818-247-6000 • www.glenair.com • U.S. CAGE code 06324 • SuperNine® Catalog
Dimensions in Inches (millimeters) are subject to change without notice.

SuperNine® Lightweight Hermetic

MIL-DTL-38999 Series III Type

2330-0131 Connector Receptacle, RJ45 to Solder Cup Termination

CODE RED

2330-0131-00 - WALL MOUNT RECEPTACLE WITH SLOTTED HOLES

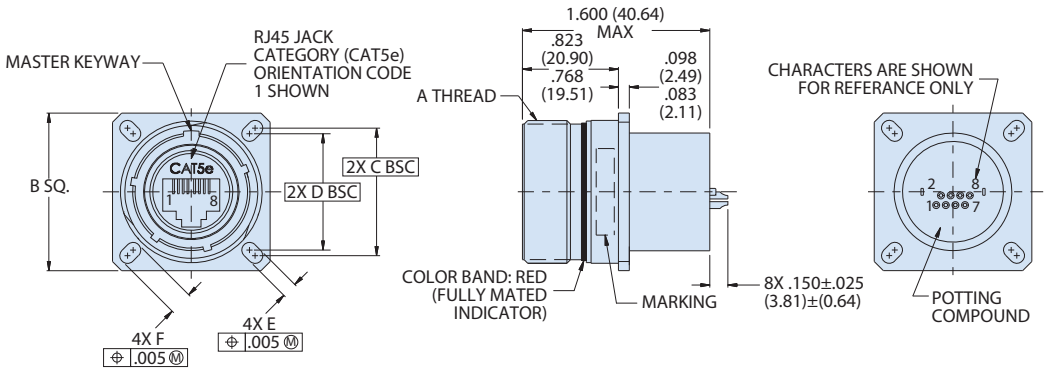

Table II Wall Mount							
Shell Size	A Thread	B SQ	C BSC	D BSC	E	F	ØG HOLES
17	1.1875-.1P-.3L-TS-2A	1.323 (33.60) 1.299 (32.99)	1.062 (26.97)	0.969 (24.61)	0.136 (3.45) 0.120 (3.05)	0.202 (5.13) 0.186 (4.72)	0.136 (3.45) 0.120 (3.05)
19	1.2500-.1P-.3L-TS-2A	1.449 (36.80) 1.425 (36.20)	1.156 (29.36)	1.062 (26.97)	0.136 (3.45) 0.120 (3.05)	0.202 (5.13) 0.186 (4.72)	0.136 (3.45) 0.120 (3.05)

2330-0131-D0 - WALL MOUNT RECEPTACLE WITH ROUND HOLES

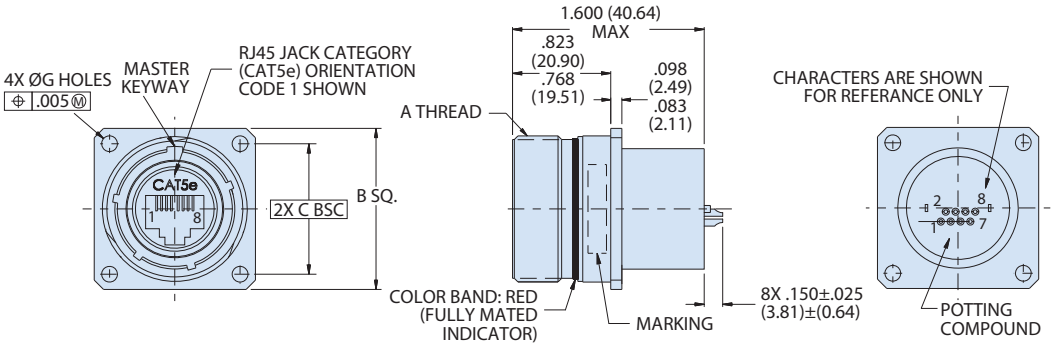

© 2022 Glenair, Inc • 1211 Air Way, Glendale, CA 91201 • 818-247-6000 • www.glenair.com • U.S. CAGE code 06324 • SuperNine® Catalog
Dimensions in Inches (millimeters) are subject to change without notice.

SuperNine® Lightweight Hermetic

MIL-DTL-38999 Series III Type

2330-0131 Connector Receptacle, RJ45 to Solder Cup Termination

2330-0131-07 - JAM NUT MOUNT RECEPTACLE

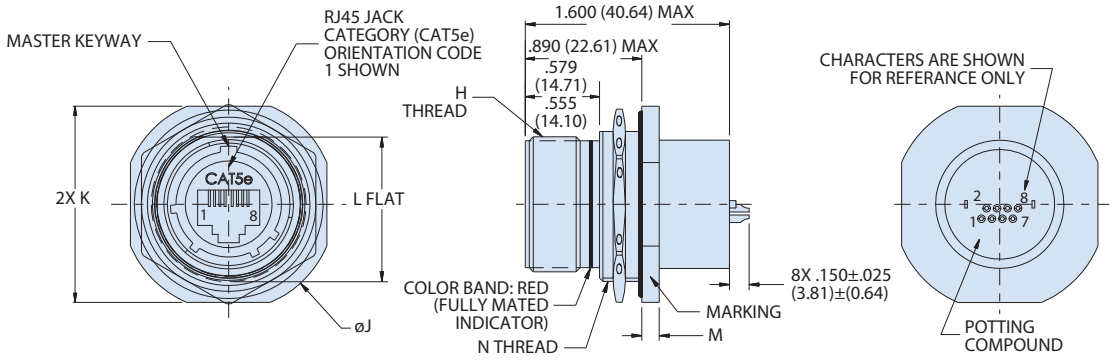

Table III Jam Nut Mount						
Shell Size	A Thread	ØJ	K	L FLAT	M	N THREAD
17	1.1875-.1P-.3L-TS-2A	1.764 (44.81) 1.740 (44.20)	1.642 (41.71) 1.610 (40.89)	1.191 (30.25) 1.181 (30.00)	0.122 (3.10) 0.083 (2.11)	M32 X 1.0-6g 0.100R
19	1.2500-.1P-.3L-TS-2A	1.949 (49.50) 1.925 (48.90)	1.827 (46.41) 1.795 (45.59)	1.316 (33.43) 1.306 (33.17)	0.153 (3.89) 0.114 (2.90)	M35 X 1.0-6g 0.100R

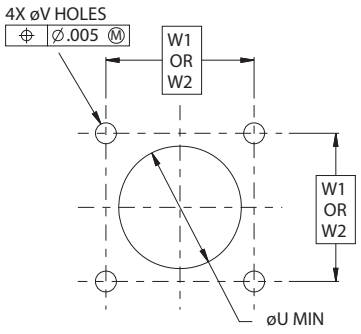

FRONT PANEL MOUNTING

RECOMMENDED MOUNTING HOLES

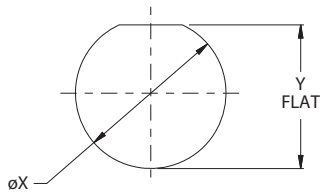

RECOMMENDED PANEL CUT OUT

Table IV Panel Cutout and Wall Mount						
Shell Size	ØU MIN	ØV HOLES	W1 BSC	W2 BSC	ØX	Y FLAT
17	1.016 (25.81)	0.133 (3.38) 0.123 (3.12)	1.062 (26.97)	0.969 (24.61)	1.270 (32.26) 1.260 (32.00)	1.210 (30.73) 1.200 (30.48)
19	1.141 (28.98)		1.156 (29.36)	1.062 (26.97)	1.395 (35.43) 1.385 (35.18)	1.335 (33.91) 1.325 (33.65)

© 2022 Glenair, Inc • 1211 Air Way, Glendale, CA 91201 • 818-247-6000 • www.glenair.com • U.S. CAGE code 06324 • SuperNine® Catalog
Dimensions in Inches (millimeters) are subject to change without notice.

SuperNine® Lightweight Hermetic

MIL-DTL-38999 Series III Type

2330-0131 Connector Receptacle, RJ45 to Solder Cup Termination

RJ45 ORIENTATION OPTIONS (PARTIAL VIEWS SHOWN)

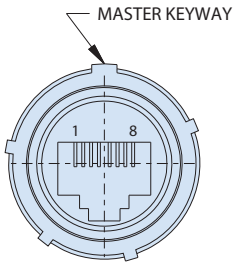

CODE 1
(FRONT)

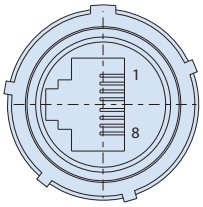

CODE 2
(FRONT)

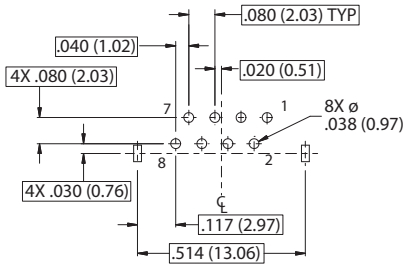

SOLDER CUP ORIENTATION
(REAR)

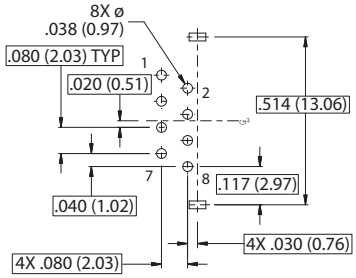

SOLDER CUP ORIENTATION
(REAR)

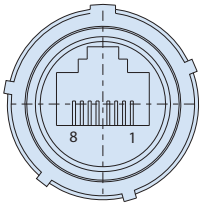

CODE 3
(FRONT)

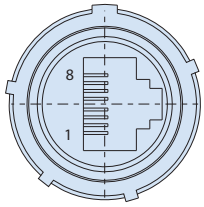

CODE 4
(FRONT)

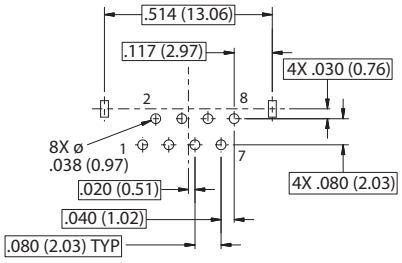

SOLDER CUP ORIENTATION
(REAR)

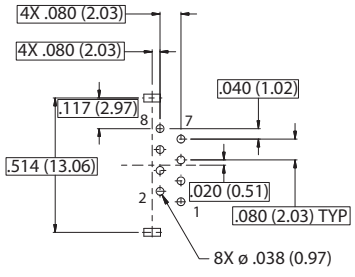

SOLDER CUP ORIENTATION
(REAR)

© 2022 Glenair, Inc • 1211 Air Way, Glendale, CA 91201 • 818-247-6000 • www.glenair.com • U.S. CAGE code 06324 • SuperNine® Catalog
Dimensions in Inches (millimeters) are subject to change without notice.

SuperNine® Glass seal hermetic

MIL-DTL-38999 Series III Type

2333-2002 bulkhead feed-thru connector with BMB contacts

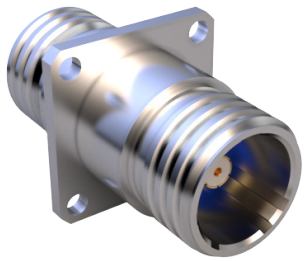

Part Number Development					
Sample Part Number	**2333-2002**	**-07**	**ME**	**11RFF1**	**N**
Series / Basic Part No.	Series 23 SuperNine jam-nut CODE RED hermetic receptacle				
Connector Style	**-07** = Jam-nut mount **-D0** = Wall mount with round holes				
Material/Finish	See Material and Finish Table				
Insert Arrangement	See Insert Arrangement Table				
Polarization	**A**, **B**, **C**, **D**, **E**, **N** = Normal				

NOTES

1. Material/finish:
   Shell, jam-nut, bushing - per table I
   seals, o-ring - fluorosilicone blend
   sealing compound - polymer encapsulant
   Contact:
   Outer/inner conductors - copper alloy / gold plate
   insulators - PTFE
   insulator (hermetic) - full glass
   ferrule/pin (hermetic) - nickel-iron alloy / gold plate
2. Hermeticity = < 1 x 10^-7 sccHe/sec @ 1 atm delta
3. For pin-pin feedthru, signal applied to one contact will result in signal to the contact directly opposite, regardless of contact identification
4. This receptacle connector mates with special Glenair plug connector with same polarization, size, arrangement, (233-290) and with BMB socket contact (852-256)
5. BMB contact electrical performance:
   impedance: 50 ohms nom
   Frequency range: DC-18 ghz
   VSWR: 1.5:1 Max
   DWV: 1000 vac, inner pin to outer pin
   IR: 5000 megaohms, inner pin to outer pin
6. Contact is non-removable and common ground to connector body.
7. Insert arrangement shown for reference only.
8. Assembly to be identified with glenair's name, part number, and date code, space permitting.
9. Flycuts (wrench flats) are an optional design.

Material and Finish Table			
Code	**Material**	**Finish**	**Temperature Range**
NF	Aluminum Alloy	Cad/O.D. Over Electroless Nickel	-65°C TO +175°C
ZR	Aluminum Alloy	Zinc Ni, Black	-65°C TO +175°C
ME	Aluminum Alloy	Electroless Nickel	-65°C TO +200°C
Z1	Stainless Steel	Passivate	-65°C TO +200°C
ZL	Stainless Steel	Electro-Deposited Nickel	-65°C TO +200°C

Dimensions						
SHELL SIZE	A THREAD	ØB	C	ØD	E	F THREAD
11	.750-.1P-.3L-TS-2A	1.375 (34.92)	1.252 (31.80)	.835 (21.21) .825 (20.96)	.771 (19.58) .761 (19.33)	M20 X 1-6g-.100R
17	1.1875-.1P-.3L-TS-2A	1.752 (44.50)	1.626 (41.30)	1.270 (32.26) 1.260 (32.00)	1.210 (30.73) 1.200 (30.48)	M32 X 1-6g-.100R
19	1.250-.1P-.3L-TS-2A	1.937 (49.20)	1.811 (46.00)	1.395 (35.43) 1.385 (35.18)	1.335 (33.91) 1.325 (33.65)	M35 X 1-6g-.100R
21	1.375-.1P-.3L-TS-2A	2.063 (52.40)	1.937 (49.20)	1.520 (38.61) 1.510 (38.35)	1.460 (37.08) 1.450 (36.83)	M38 X 1-6g-.100R
23	1.500-.1P-.3L-TS-2A	2.189 (55.60)	2.063 (52.40)	1.645 (41.78) 1.635 (41.53)	1.585 (40.26) 1.575 (40.00)	M41 X 1-6g-.100R
25	1.625-.1P-.3L-TS-2A	2.311 (58.70)	2.189 (55.60)	1.770 (44.96) 1.760 (44.70)	1.710 (43.43) 1.700 (43.18)	M44 X 1-6g-.100R

Dimensions (cont.)					
SHELL SIZE	G SQ	H BSC	J	ØK	ØL
11	1.043 (26.49) 1.019 (25.88)	0.812 (20.62)	.820 (20.83) .771 (19.58)	0.796 (20.22)	.133 (3.38) .123 (3.12)
17	1.323 (33.60) 1.299 (32.99)	1.062 (26.97)	.820 (20.83) .771 (19.58)	1.219 (30.96)	.133 (3.38) .123 (3.12)
19	1.449 (36.80) 1.425 (36.20)	1.156 (29.36)	.820 (20.83) .771 (19.58)	1.297 (32.94)	.133 (3.38) .123 (3.12)
21	1.575 (40.00) 1.551 (39.40)	1.250 (31.75)	.790 (20.07) .741 (18.82)	1.422 (36.12)	.133 (3.38) .123 (3.12)
23	1.701 (43.21) 1.677 (42.60)	1.375 (34.92)	.790 (20.07) .741 (18.82)	1.547 (39.29)	.159 (4.04) .149 (3.78)
25	1.823 (46.30) 1.799 (45.69)	1.500 (38.10)	.790 (20.07) .741 (18.82)	1.672 (42.47)	.155 (3.94) .145 (3.68)

© 2022 Glenair, Inc • 1211 Air Way, Glendale, CA 91201 • 818-247-6000 • www.glenair.com • U.S. CAGE code 06324 • SuperNine® Catalog
Dimensions in Inches (millimeters) are subject to change without notice.

Rev. 02.07.24

SuperNine® Glass seal hermetic

MIL-DTL-38999 Series III Type

2333-2002 Jam-nut mount, bulkhead feed-thru with BMB contacts

2333-2002-07 AND D0 BULKHEAD FEED-THRU WITH PIN-PIN SIZE 8 BMB CONTACTS

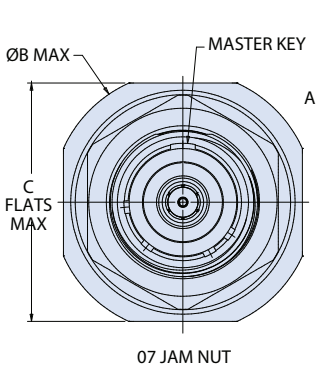

07 JAM NUT

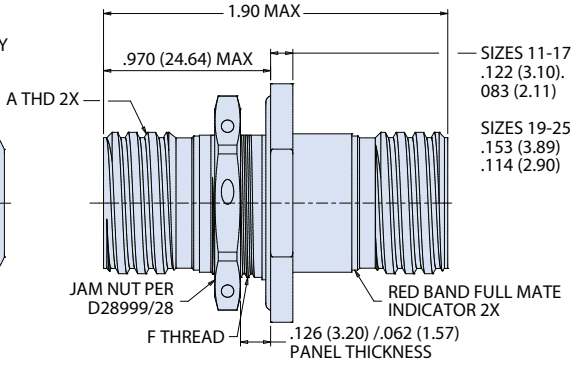

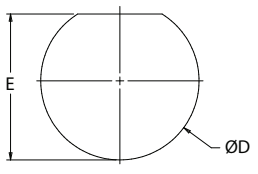

RECOMMENDED MOUNTING HOLE
FOR JAM NUT
(SEE TABLE I)

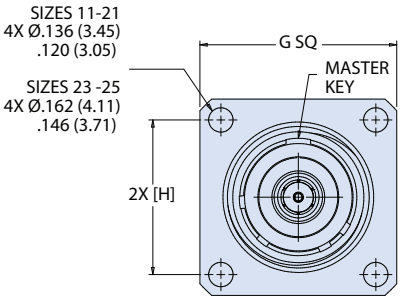

D0 WALL MOUNT

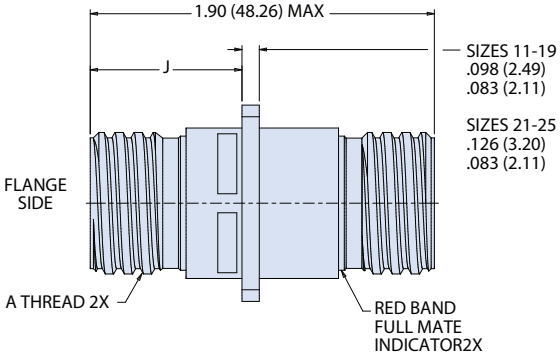

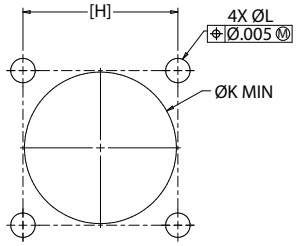

RECOMMENDED MOUNTING HOLES
FOR WALL MOUNT
(SEE TABLE I)

SIZE 8 BMB CONTACT INSERT ARRANGEMENTS

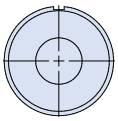

11RF1
1X SIZE 8

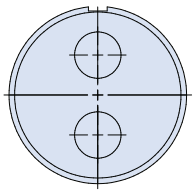

17RF75
2X SIZE 8

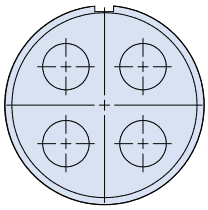

19RF4
4X SIZE 8

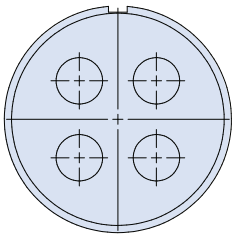

21RF75
4X SIZE 8

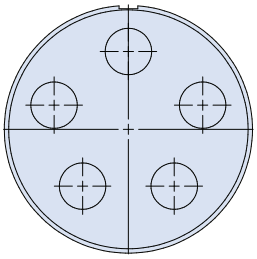

23RF5
5X SIZE 8

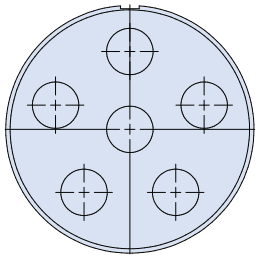

23RF6
6X SIZE 8

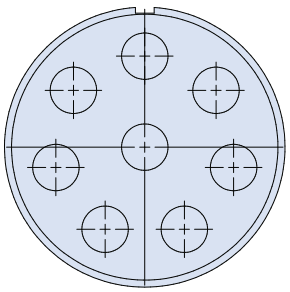

25RF8
8X SIZE 8

Insert Arrangement Layouts	
Layout	Contacts
11RF1	1 size 8
17RF75	2 size 8
19RF4	4 size 8
21RF75	4 size 8
23RF5	5 size 8
23RF6	6 size 8
25RF8	8 size 8

© 2022 Glenair, Inc • 1211 Air Way, Glendale, CA 91201 • 818-247-6000 • www.glenair.com • U.S. CAGE code 06324 • SuperNine® Catalog

Dimensions in Inches (millimeters) are subject to change without notice.

SuperNine® Lightweight hermetic

MIL-DTL-38999 Series III Type

233-256 Jam nut mount receptacle

Part Number Development						
Sample Part Number	**233-256**	**ME**	**17**	**-35**	**C**	**N**
Series / Basic Part No.	Series 23 SuperNine CODE RED hermetic connector					
Material/Finish*	**ME** = Aluminum alloy, nickel plate **AB** = Aluminum bronze					
Shell Size*	**9, 11, 13, 15, 17, 19, 21, 23, 25**					
Insert Arrangement*	Per MIL-STD-1560					
Contact Style	**C** = Pin, PC Tail **D** = Socket, PC Tail **P** = Pin, Solder Cup **S** = Socket, Solder Cup					
Polarization*	**A, B, C, D, E, N** = Normal; see section A for key position details					

***Refer to Section A for standard insert arrangements and pages D-8 thru D-10 for special shielded contact arrangements, consult factory for additional options**
Modification codes may be added directly to the end of any valid part number

NOTES

1. Connectors meet all applicable dimensions, mechanical, electrical, environmental and sealing requirements of MIL-DTL-38999/24, PC tails.
2. Connectors tested and meet applicable requirements of MIL-DTL-38999/24, class N & Y. See glenair test report GT-16-233.
3. Performances:
   - Operation temperature range: -65°C to +200°C
   - Leak rate: 1 x 10^-7 cc/s max helium, 1 ATM.
   - IR: 5,000 megohms min at room temperature per MIL-DTL-38999.
   - DWV: see service rating per applicable MIL-STD-1560 arrangements.

MATERIAL/FINISHES:

- Shell & jam nuts: see material/plating in p/n developement above.
- Insulators: high grade rigid dielectric / N.A.
- O-ring & seals: fluorosilicone / N.A.
- Contacts: copper alloy / gold plated.
- Sealing compound: silicone base polymer.

PC Tail Diameter Dimensions	
Contact Size	**ØA**
22D	.020/.018 (0.51/ 0.46)
20	.030/.028 (0.76/ 0.71)
16	.040/.038 (1.02/ 0.97)
12	.072/.070 (1.83/ 1.78)

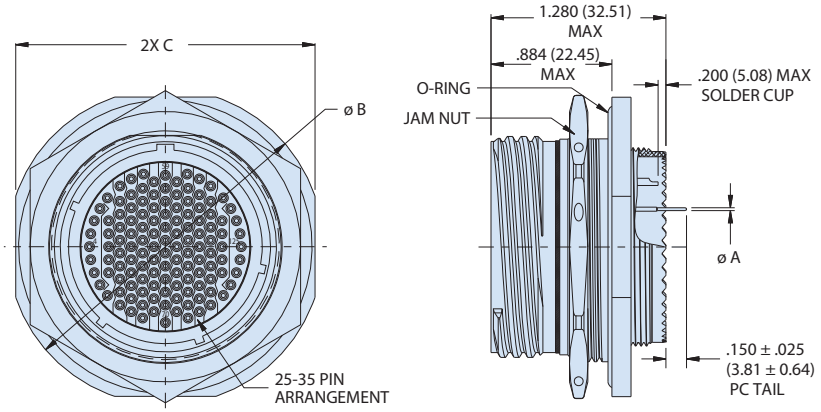

Dimensions					
Shell Size Code	**Shell Size**	**ø B ±.010**	**C ±.016**	**ø D ±.010 -0.000**	**E +0.000 -0.010**
A	9	1.189 (30.20)	1.063 (27.00)	0.693 (17.60)	0.657 (16.69)
B	11	1.374 (34.90)	1.252 (31.80)	0.825 (20.96)	0.771 (19.58)
C	13	1.500 (38.10)	1.374 (34.90)	1.010 (25.65)	0.955 (24.26)
D	15	1.626 (41.30)	1.500 (38.10)	1.135 (28.83)	1.085 (27.56)
E	17	1.752 (44.50)	1.626 (41.30)	1.260 (32.00)	1.210 (30.73)
F	19	1.937 (49.20)	1.811 (46.00)	1.385 (35.18)	1.335 (33.91)
G	21	2.063 (52.40)	1.937 (49.20)	1.510 (38.35)	1.460 (37.08)
H	23	2.189 (55.60)	2.063 (52.40)	1.635 (41.53)	1.585 (40.26)
J	25	2.311 (58.70)	2.189 (55.60)	1.760 (44.70)	1.710 (43.43)

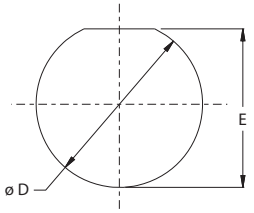

RECOMMENDED PANEL CUTOUT PER MIL-DTL-38999, TYPE E

© 2022 Glenair, Inc • 1211 Air Way, Glendale, CA 91201 • 818-247-6000 • www.glenair.com • U.S. CAGE code 06324 • SuperNine® Catalog
Dimensions in Inches (millimeters) are subject to change without notice.

Rev 02.06.24

MIL-DTL-38999 Series I Type

231-250 Code Red Lightweight Hermetic Receptacle





CONNECTOR FEATURES

- Bayonet coupling for rapid mating
- Scoop proof technology
- MIL-STD-1560 insert arrangements
- Same EMI performance as D38999 Series III
- Quick turn, positive lock, full mate indicator
- 500 cycles per D38999
- Enhanced finishes like Passivated stainless steel and Electrodeposited Nickel over stainless steel
- Available in jam nut, solder and box mount
- Meets 1 x 10^{-7} cc/sec He leak requirement
- Hi-reliability stainless steel bayonets utilized

HOW TO ORDER							
Sample Part Number	**231-250**	**-D0**	**NF**	**17**	**-8**	**P**	**N**

Basic Part Number	**231-250**
Connector Style	**07** = Receptacle, Jam Nut **D0** = Receptacle, Wall Mount Front Panel, Standard Holes **E0** = Receptacle, Extended Wall Mount, Back Panel, Standard Holes (MS27656T)
Material / Finish	See Table I
Connector Size	**9**, **11**, **13**, **15**, **17**, **19**, **21**, **23**, **25**
Insert Arrangement	Per MIL-STD-1560
Contact Style	**P** = Pin, Solder Cup **S** = Socket, Solder Cup **C** = Pin, PC Tail **D** = Socket, PC Tail
Alternate Polarization	**A**, **B**, **C**, **D** (**N** = Normal)

TABLE I - MATERIAL/FINISH

SYM	Material	Finish	Temp. Range
AB	Marine Bronze	None (Clean Only)	-65° to +200°C
MA	Aluminum Alloy	Electroless Nickel, Matte Finish	
ME		Electroless Nickel	
NF		Cad/O.D. Over Electroless Nickel	-65° to +175°C
ZN		Zinc Ni, Olive Drab	
ZR		Zinc Ni, Black (Tri-Valent Cr)	
Z1	Stainless Steel	CRES, Passivated	-65° to +200°C
ZL		CRES, Nickel Finish	

TABLE II - PC TAIL

Contact Size	Ø CC
22D	.020 .018
20	.030 .028
16	.040 .038
12	.072 .070

TABLE III - PANEL ACCOMMODATION

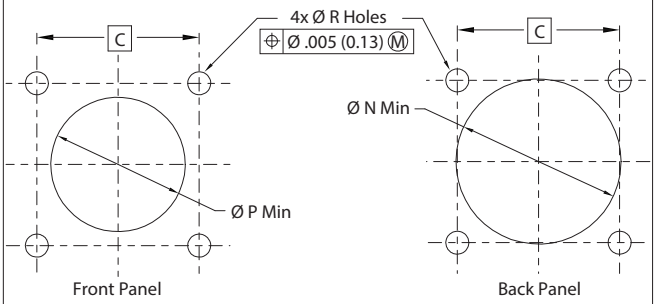

RECOMMENDED PANEL MOUNTING HOLES FOR WALL MOUNT RECEPTACLES

© 2022 Glenair, Inc • 1211 Air Way, Glendale, CA 91201 • 818-247-6000 • www.glenair.com • U.S. CAGE code 06324 •
SuperNine MIL-DTL-38999 Series I Type · Dimensions in Inches (millimeters) are subject to change without notice.

MIL-DTL-38999 Series I Type

231-250 Code Red Lightweight Hermetic Receptacle

231-250-D0 WALL MOUNT FRONT PANEL RECEPTACLE WITH STANDARD HOLES
231-250-E0 WALL MOUNT BACK PANEL RECEPTACLE WITH STANDARD HOLES

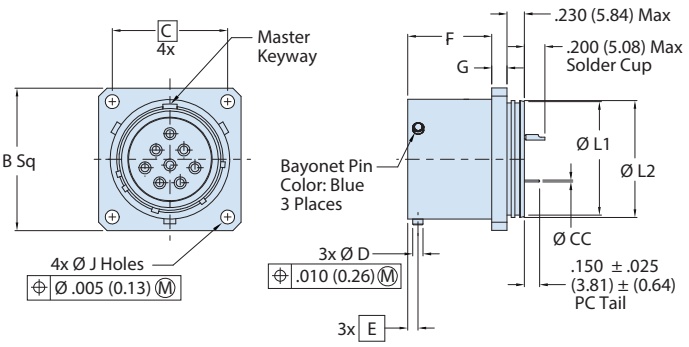

D0 - WALL MOUNT FRONT PANEL RECEPTACLE WITH STANDARD HOLES

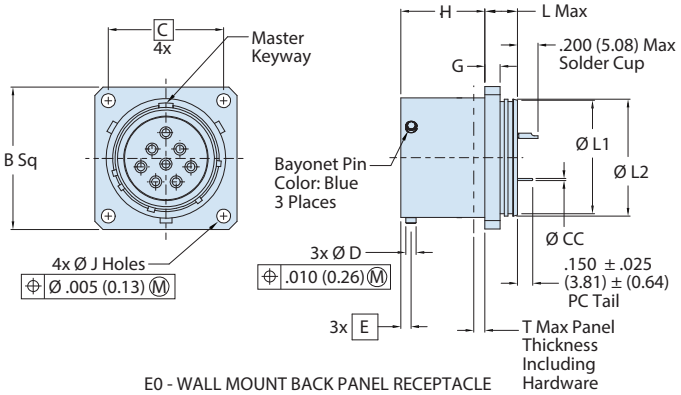

E0 - WALL MOUNT BACK PANEL RECEPTACLE WITH STANDARD HOLES

CONNECTOR AND PANEL MOUNT DIMENSIONS

Shell Size Code	Shell Size	B Sq	C Bsc	ØD	E Bsc	F	G	G'	H	ØJ Holes	K	K'	L Max	ØL1 ±.012	ØL2 0.012 0.000	ØN Min	ØP Min	ØR Holes	T Max
A	9	0.958 (24.33) 0.918 (23.32)	0.719 (18.26)	0.084 (2.13) 0.076 (1.93)	0.100 (2.54)	0.632 (16.05) 0.627 (15.93)	0.100 (2.54) 0.085 (2.16)	0.179 (4.55) 0.140 (3.56)	0.820 (20.83) 0.815 (20.70)	0.138 (3.51) 0.123 (3.12)	.112-40 UNC-3B	M3X0.5	0.300 (7.62)	0.602 (15.29)	0.642 (16.31)	0.656 (16.66)	0.658 (16.71)	0.133 (3.38) 0.123 (3.12)	0.234 (5.94)
B	11	1.051 (26.70) 1.011 (25.68)	0.812 (20.62)											0.724 (18.39)	0.764 (19.41)	0.796 (20.22)	0.780 (19.81)		
C	13	1.145 (29.08) 1.105 (28.07)	0.906 (23.01)											0.850 (21.59)	0.894 (22.71)	0.922 (23.42)	0.910 (23.11)		
D	15	1.239 (31.47) 1.199 (30.45)	0.969 (24.61)											0.976 (24.79)	1.020 (25.91)	1.047 (26.59)	1.036 (26.31)		
E	17	1.332 (33.83) 1.292 (32.82)	1.062 (26.97)											1.102 (27.99)	1.142 (29.01)	1.219 (30.96)	1.158 (29.41)		
F	19	1.458 (37.03) 1.418 (36.02)	1.156 (29.36)											1.228 (31.19)	1.268 (32.21)	1.297 (32.94)	1.284 (32.61)		
G	21	1.582 (40.18) 1.542 (39.17)	1.250 (31.75)			0.602 (15.29) 0.597 (15.16)	0.130 (3.30) 0.115 (2.92)	0.190 (4.83) 0.170 (4.32)	0.790 (20.07) 0.785 (19.94)	0.157 (3.99)			0.330 (8.38)	1.350 (34.29)	1.394 (35.41)	1.422 (36.12)	1.410 (35.81)	0.159 (4.04) 0.149 (3.78)	0.204 (5.18)
H	23	1.708 (43.38) 1.668 (42.37)	1.375 (34.93)											1.476 (37.49)	1.520 (38.61)	1.547 (39.29)	1.536 (39.01)		
J	25	1.832 (46.53) 1.792 (45.52)	1.500 (38.10)	0.131 (3.33) 0.123 (3.12)	0.109 (2.77)					0.142 (3.61)	.138-32 UNC-3B	M4X0.7		1.602 (40.69)	1.642 (41.71)	1.672 (42.47)	1.658 (42.11)	0.155 (3.94) 0.145 (3.68)	0.193 (4.90)

© 2022 Glenair, Inc • 1211 Air Way, Glendale, CA 91201 • 818-247-6000 • www.glenair.com • U.S. CAGE code 06324 •
SuperNine MIL-DTL-38999 Series I Type · Dimensions in Inches (millimeters) are subject to change without notice.

MIL-DTL-38999 Series I Type

231-250 Code Red Lightweight Hermetic Receptacle

231-250-07 JAM NUT MOUNT RECEPTACLE

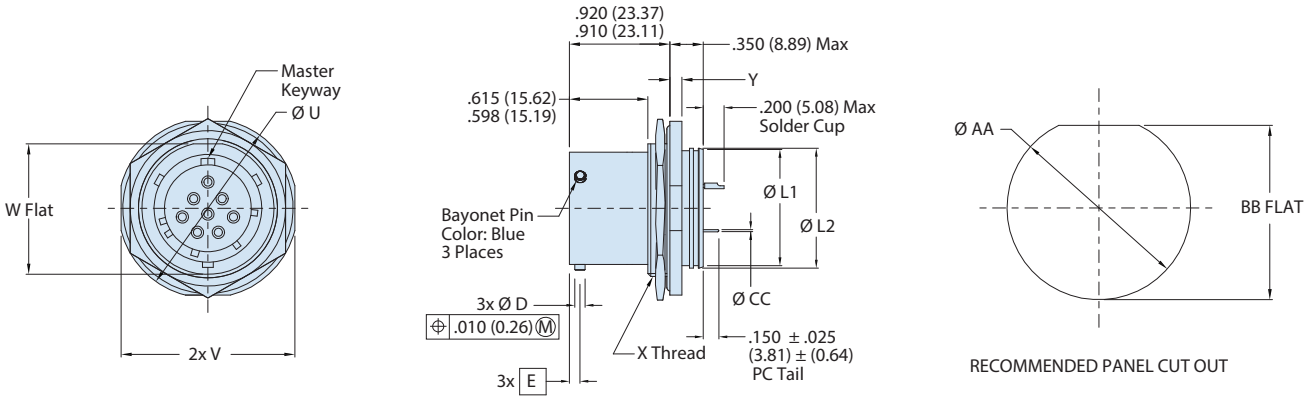

07 - JAM NUT MOUNT RECEPTACLE (MS27470 REF)

CONNECTOR AND PANEL MOUNT DIMENSIONS								
Shell Size Code	Shell Size	ØU	V	W Flat	X Thread	Y	ØAA	BB Flat
A	9	1.204 (30.58) 1.172 (29.77)	1.078 (27.38) 1.046 (26.57)	0.655 (16.64) 0.645 (16.38)	.6875-24 UNEF-2A	.120 (3.05) .099 (2.51)	0.703 (17.86) 0.693 (17.60)	0.661 (16.79) 0.654 (16.61)
B	11	1.391 (35.33) 1.359 (34.52)	1.266 (32.16) 1.234 (31.34)	.755 (19.18) .745 (18.92)	.8125-20 UNEF-2A		.835 (21.21) .825 (20.96)	.771 (19.58) .761 (19.33)
C	13	1.516 (38.51) 1.484 (37.69)	1.391 (35.33) 1.359 (34.52)	0.942 (23.93) 0.932 (23.67)	1.000-20 UNEF-2A		1.020 (25.91) 1.010 (25.65)	0.955 (24.26) 0.945 (24.00)
D	15	1.641 (41.68) 1.609 (40.87)	1.516 (38.51) 1.484 (37.69)	1.066 (27.08) 1.056 (26.82)	1.1250-18 UNEF-2A		1.145 (29.08) 1.135 (28.83)	1.085 (27.56) 1.075 (27.31)
E	17	1.766 (44.86) 1.734 (44.04)	1.641 (41.68) 1.609 (40.87)	1.191 (30.25) 1.181 (30.00)	1.2500-18 UNEF-2A		1.270 (32.26) 1.260 (32.00)	1.210 (30.73) 1.200 (30.48)
F	19	1.954 (49.63) 1.922 (48.82)	1.828 (46.43) 1.796 (45.62)	1.316 (33.43) 1.306 (33.17)	1.3750-18 UNEF-2A		1.395 (35.43) 1.385 (35.18)	1.335 (33.91) 1.325 (33.66)
G	21	2.078 (52.78) 2.046 (51.97)	1.954 (49.63) 1.922 (48.82)	1.441 (36.60) 1.431 (36.35)	1.5000-18 UNEF-2A	.151 (3.84) .130 (3.30)	1.520 (38.61) 1.510 (38.35)	1.460 (37.08) 1.450 (36.83)
H	23	2.204 (55.98) 2.172 (55.17)	2.078 (52.78) 2.046 (51.97)	1.566 (39.78) 1.556 (39.52)	1.6250-18 UNEF-2A		1.645 (41.78) 1.635 (41.53)	1.585 (40.26) 1.575 (40.01)
J	25	2.328 (59.13) 2.296 (58.32)	2.204 (55.98) 2.172 (55.17)	1.691 (42.95) 1.681 (42.70)	1.7500-18 UNEF-2A		1.770 (44.96) 1.760 (44.70)	1.710 (43.43) 1.700 (43.18)

© 2022 Glenair, Inc • 1211 Air Way, Glendale, CA 91201 • 818-247-6000 • www.glenair.com • U.S. CAGE code 06324 •
SuperNine MIL-DTL-38999 Series I Type · Dimensions in Inches (millimeters) are subject to change without notice.

ADVANCED PERFORMANCE

SuperNine® RJ45, USB, and HDMI MIL-DTL-38999 Series III Type connectors

with commercial high-speed data protocol connector interfaces

RJ45 SUPERNINE MIL-DTL-38999 SERIES III TYPE CONNECTORS



Page E-2

USB 2.0/3.0 SUPERNINE MIL-DTL-38999 SERIES III TYPE CONNECTORS



Page E-31

RJ45 TRANSIENT VOLTAGE SUPPRESSION SUPERNINE MIL-DTL-38999 SERIES III TYPE CONNECTORS

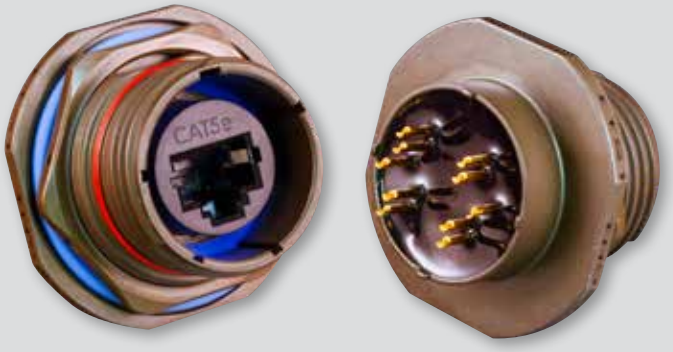

Page E-25

HDMI 2.0 CABLE ASSEMBLIES



Page E-53

AVAILABLE INTERFACE AND TERMINATION OPTIONS



Solder Cup



PC tail



Crimp Removable



Filtered



Quadrax



Pin/Socket

© 2022 Glenair, Inc • 1211 Air Way, Glendale, CA 91201 • 818-247-6000 • www.glenair.com • U.S. CAGE code 06324 • SuperNine Catalog
Dimensions in Inches (millimeters) are subject to change without notice.

RJ45/USB
SUPER SEAL™



SUPERSEAL™

Ruggedized RJ45, USB and HDMI connectors for applications as diverse as military ground vehicles to in-flight entertainment

High performance, proven reliability environmental connectors housing commercial data protocol interfaces — IP67 rated in unmated condition, for mission-critical field applications



MIL-DTL-38999 Series III with sealed RJ45



MIL-DTL-38999 Series III with sealed USB 2.0 and 3.0



MIL-DTL-38999 Series III with sealed HDMI 2

- **Superior sealing—IP67 unmated—for complete system protection against water, sand and dust**
- **Highly durable SuperSeal™ insert design, provides enhanced operating temperature, increased life-cycle, and rugged vibration and shock performance**
- **Shielded/grounded coupler designs in both receptacle and plug connectors**
- **Crimp, solder-cup, PC tail, cable assemblies and Quadrax contact/ wire termination options**
- **RJ45 plug and/or jack interface options available in Cat 5e/6A**
- **MIL-DTL-38999 type versions intermateable with other RJ45 field-duty connectors**

© 2022 Glenair, Inc • 1211 Air Way, Glendale, CA 91201 • 818-247-6000 • www.glenair.com • U.S. CAGE code 06324 • SuperNine Catalog
Dimensions in Inches (millimeters) are subject to change without notice.

SuperNine® RJ45, USB, and HDMI
MIL-DTL-38999 Series III Type connectors
Performance Specifications

RJ45 PCB FOOTPRINT AND ORIENTATIONS FOR MIL-DTL-38999 TYPE, SUPERNINE RECEPTACLES

CODE 1

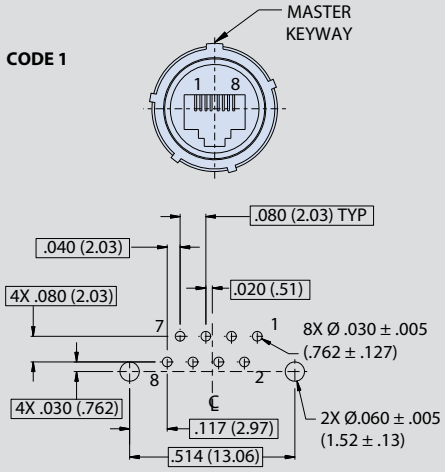

CODE 2

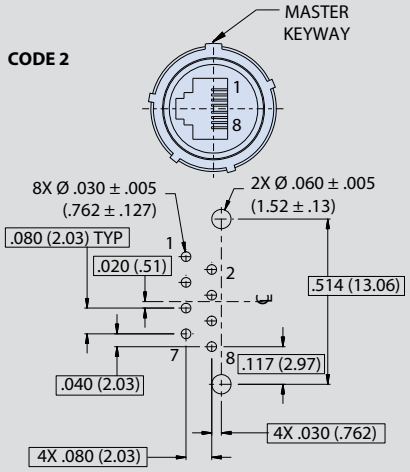

CODE 3

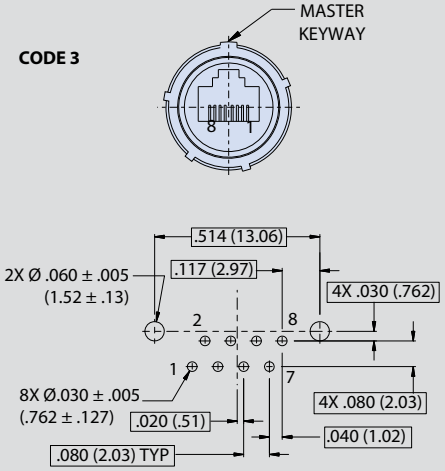

CODE 4

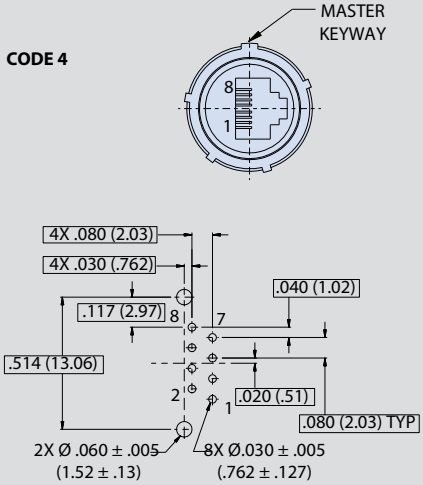

STANDARD USB 2.0 PCB FOOTPRINTS FOR MIL-DTL-38999 TYPE, SUPERNINE RECEPTACLES

Recommended (Solder Side)

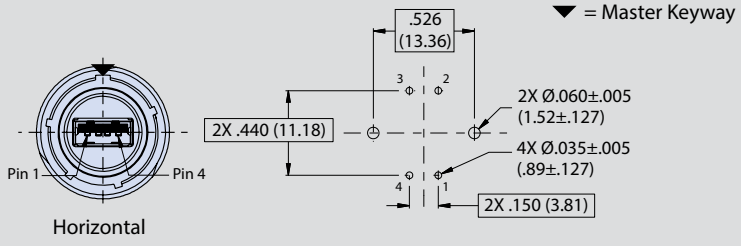

Recommended (Solder Side)

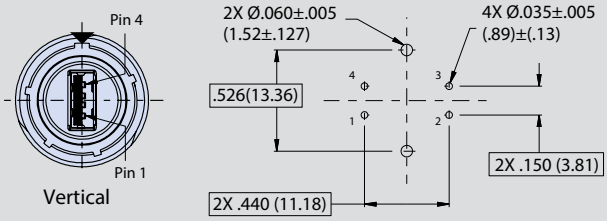

© 2022 Glenair, Inc • 1211 Air Way, Glendale, CA 91201 • 818-247-6000 • www.glenair.com • U.S. CAGE code 06324 • SuperNine Catalog
Dimensions in Inches (millimeters) are subject to change without notice.

SuperNine® RJ45, USB, and HDMI
MIL-DTL-38999 Series III Type connectors
Recommended Panel Cutouts

MIL-DTL-38999 TYPE, SUPERNINE RJ45 AND HDMI PANEL CUTOUTS FOR SHELL SIZE 17 AND 19

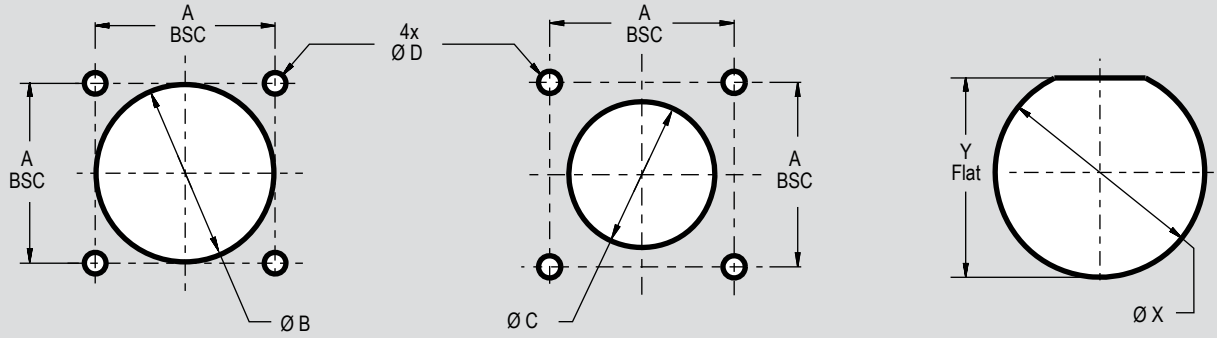

WALL MOUNT
REAR PANEL MOUNT

WALL MOUNT
FRONT PANEL MOUNT

JAM NUT MOUNT

Panel Cut-Out Dimensions						
Shell Size	A Bsc	B Dia Min	C Dia Min	D Holes	X Dia	Y Flat
17	1.062 (26.97)	1.219 (30.96)	1.016 (25.81)	.133 (3.38) .123 (3.12)	1.270 (32.26) 1.260 (32.00)	1.210 (30.73) 1.208 (30.68)
19*	1.156 (29.36)	1.297 (32.94)	1.141 (28.98)		1.395 (35.43) 1.385 (35.18)	1.335 (33.91) 1.325 (33.66)

*Not available for HDMI 2.0 connectors

MIL-DTL-38999 TYPE, SUPERNINE USB PANEL CUTOUTS FOR SHELL SIZE 15 AND 17

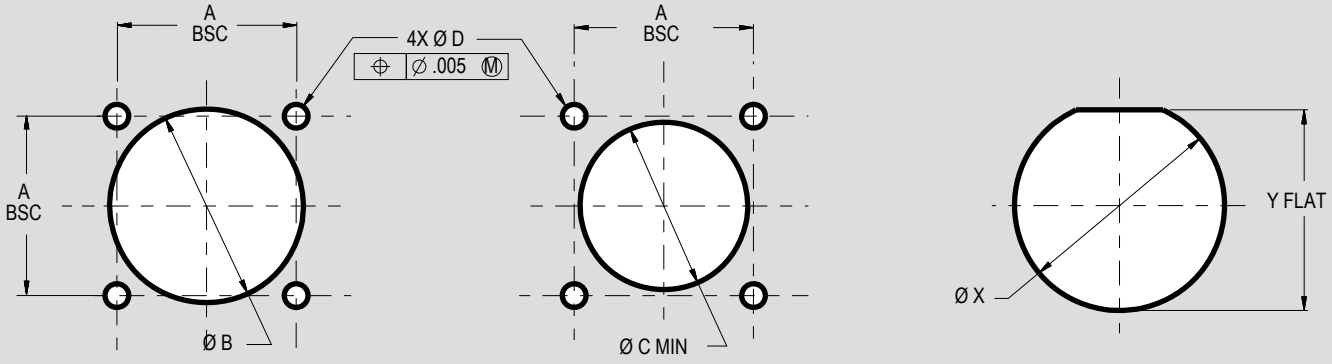

WALL MOUNT
REAR PANEL MOUNT

WALL MOUNT
FRONT PANEL MOUNTING

JAM NUT MOUNT

Panel Cut-Out Dimensions						
Shell Size	A Bsc	B Dia Min	C Dia Min	D Holes	X Dia	Y Flat
15	.969 (24.61)	1.047 (26.59)	.906 (23.01)	.133 (3.38) .123 (3.12)	1.145 (29.08) 1.135 (28.83)	1.085 (27.56) 1.075 (27.31)
17	1.062 (26.97)	1.219 (30.96)	FPM not offered		1.270 (32.26) 1.260 (32.00)	1.210 (30.73) 1.200 (30.48)

© 2022 Glenair, Inc • 1211 Air Way, Glendale, CA 91201 • 818-247-6000 • www.glenair.com • U.S. CAGE code 06324 • SuperNine Catalog
Dimensions in Inches (millimeters) are subject to change without notice.

SuperNine® RJ45, USB, and HDMI

MIL-DTL-38999 Series III type connectors

Modification Codes and Materials/Finishes

ASTM E595 Outgassing

MOD CODE 186S

- **SuperSeal® connectors specially processed to meet ASTM E595 outgassing requirements.**
- **Modification code specifies special outgassing bakeout processing.**
- **Meets NASA Screening Level 1 requirements**

Space flight equipment requires low-outgassing components in order to prevent degradation to optics and other sensitive instruments. The space industry has adopted a standardized test procedure, ASTM E595, to evaluate outgassing properties. In the ASTM test, material samples are heated to 125° C at a vacuum of 5 X 10^{-5} torr for 24 hours. The test sample is then weighed to calculate the Total Mass Loss (TML), which may not exceed 1.0% of the total initial mass. A collector plate is used to determine the Collected Volatile Condensable Material (CVCM), which may not exceed 0.1% of the total original specimen mass. SuperSeal™ connectors contain nonmetallic materials such as rubber, plastic, adhesives and potting compounds which can give off gases when subjected to a vacuum or high heat. Unless the connector is specially processed, the TML and CVCM can exceed allowable limits. Glenair is able to offer a bakeout process, 48 hour oven bakeout at 257º F, which assures all materials comply with ASTM E595

UL 94 V-0 Flammability Standard

MOD CODE 928

- **SuperSeal® connectors specially processed to meet UL 94 V-0 flammability standard**

UL 94, the Standard for Safety of Flammability of Plastic Materials for Parts in Devices and Appliances testing is a plastics flammability standard released by Underwriters Laboratories of the USA. The standard classifies plastics according to how they burn in various orientations and thicknesses. From lowest (least flame-retardant) to highest (most flame-retardant) V-0. Burning stops within 10 seconds on a vertical specimen; specimens may not drip flaming particles.

Flip Vertical USB Orientation by 180 degrees

MOD CODE 915

Flip standard, vertically oriented USB designs 180 degrees, allowing pin 1 to be located at the 12 O'clock position.

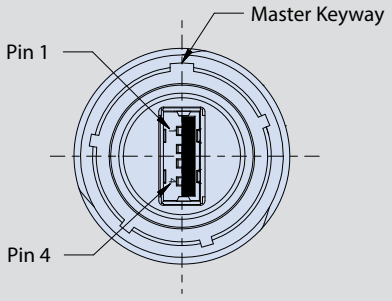

Vertical
With Pin 1 at 12 O'clock

MIL-DTL-38999 Connector and Cable Assembly Material and Finish Codes

Code	Material	Finish	Finish Specification	Hrs. Salt Spray	Electrical Conductivity	Operating Temp. Range	RoHS Compliance
ME	Aluminum	Electroless Nickel	MIL-DTL-24308 Class K	96	Yes		Yes
MT	Aluminum	Nickel PTFE	SAE AMS2454	500	Yes	-65° to +175°C	Yes
NF	Aluminum	Cadmium, Olive Drab	SAE-AMS-QQ-P-416 Type II Class 2 over electroless nickel	500	Yes	-65 to +175°C	No
ZR	Aluminum	Zinc-Nickel, Black	ASTM B841 Grade 5 over electroless nickel	500	Yes	-65 to +175°C	Yes

© 2022 Glenair, Inc • 1211 Air Way, Glendale, CA 91201 • 818-247-6000 • www.glenair.com • U.S. CAGE code 06324 • SuperNine Catalog
Dimensions in Inches (millimeters) are subject to change without notice.

SuperNine® RJ45 CAT 5e and 6A
MIL-DTL-38999 Series III Type connectors
Product Selection Guide



233-312 E-9
SuperSeal™ CAT 6A Plug with RJ45 Male Mating Interface and Accessory Threads



233-300 E-10
SuperSeal D38999 Type plug with CAT 5e or 6A RJ45 Plug or D38999 Type Receptacle with CAT 5e or 6A RJ45 Jack. D38999 Type Shells with Accessory Threads



233-301 E-12
SuperSeal™ CAT 5e Receptacle Adapter with RJ45 Mating Interface and Crimp Removable Contacts.



233-302 E-14
SuperSeal™ CAT 5e Receptacle with RJ45 Mating Interface and PC Tail Termination.



233-303 E-16
SuperSeal™ CAT 5e Rececptacle with RJ45 Mating Interface and Solder Cup Termination.



233-304 E-18
SuperSeal™ CAT 5e MIL-STD-1560 Interface Receptacle Adapter with Accessory Threads and Rear RJ45 Jack.



233-305 E-20
SuperSeal™ CAT 5e Quadrax Interface Receptacle Adapter with Accessory Threads and Rear RJ45 Jack.



233-330 E-22
SuperSeal™ CAT 5e and 6A Feed-thru Receptacle with Jack-to-Jack RJ45.



Cable Assemblies E-24
SuperSeal™ CAT 5e Cable Assemblies

Transient Voltage Suppression (TVS) RJ45 Connectors E-25
Prevents Catastrophic EMP Failure in Military and Commercial Aircraft



244-001 E-27
SuperSeal™ CAT 5e Transient Voltage Suppression, Jam-Nut Receptacle with Standoffs and RJ45 Jack to PC Tail or Solder Cup Termination.



244-002 E-28
SuperSeal™ CAT 5e Transient Voltage Suppression, Wall Mount Receptacle with Standoffs and RJ45 Jack, Mating Interface to PC Tail or Solder Cup.



244-003 E-29
SuperSeal™ CAT 5e Transient Voltage Suppression Jam-Nut Receptacle with Accessory Threads and RJ45 Jack, Mating Interface to PC Tail or Solder Cup.



244-004 E-30
SuperSeal™ CAT 5e Transient Voltage Suppression Wall Mount Receptacle with Accessory Threads and RJ45 Jack, Mating Interface to PC Tail or Solder Cup.

© 2022 Glenair, Inc • 1211 Air Way, Glendale, CA 91201 • 818-247-6000 • www.glenair.com • U.S. CAGE code 06324 • SuperNine Catalog
Dimensions in Inches (millimeters) are subject to change without notice.



SERIES 23

SuperSeal™

Performance Hardened CAT 6A and CAT 5e



The SuperSeal family of ruggedized Cat 5e and 6A SuperNine connectors are IP68 rated in the mated condition for reliable environmental field use. SuperSeal connectors provide military grade protection and durability for operational use under harsh environmental conditions. SuperSeal connectors benefit from increased operating temperature range, longer life cycle and, significantly improved vibration and shock performance. CAT 5e and 6A RJ45 Ethernet is the standard data communication protocol for gathering, distribution and sharing of C4ISR information to and from command and field units within military, police fire and rescue organizations. SuperSeal provides key performance benefits including superior sealing, grounding, and wire termination for more flexible and reliable communications in rugged field applications.

- **CAT 5e and CAT 6A versions available**
- **IP67 unmated—for complete system protection against water, sand and dust**
- **Highly durable SuperSeal™ insert design, provides enhanced operating temperature, increased life-cycle, and rugged vibration and shock performance**
- **Crimp, solder-cup, PC tail and cable assemblies**



Jam-nut Mount



Wall Mount



Cable Assemblies

SuperNine® RJ45 CAT 5e and 6A
MIL-DTL-38999 Series III Type connectors
Performance Specifications

RJ45 CAT 5e Performance Specifications	
Property	**Description**
Material and Finish	
Shell/Coupling and Plating	Complete list of options available in the Material and Finish Options portion of this section
Contacts	PC tails, solder cup, and crimp contacts: copper alloy, gold plated
RJ45 Insulator	PPS
Grommet, Peripheral Seal, Interfacial Seal, O-ring	Blended fluorosilicone/silicone elastomer, 30% silicone per ZZ-R-765, 70% fluorosilicone per MIL-R-25988
Shell Sizes	17 and 19
Shielding Sleeve	Material: Copper alloy Finish: Nickel
Electrical Specifications	
Data Rate	CAT 5e = 10 BASE-T, 100 BASE-TX, and 1000 BASE-T/1000 BASE-TX
Current Rating	Cat 5e, 1.5 Amps
D.W.V.	1000 VDC (700 VAC)
I.R.	500 Mega ohms @ 500 VDC
Frequency	100 MHz, Cat 5e
Wiring	Straight through, Cat 5e
Cabling Length	Up to 100 meters or 100 meters max.
Shield Continuity	Continuous through coupler or continuous coupler to shell
Environmental/Mechanical Performance	
Sealing	IP68 mated condition, IP67 unmated condition
Outgassing	**Mod Code 186S** meets outgassing requirements per ASTM E 595 and meets NASA level 3 screening for standard reliability **Mod Code 928** meets outgassing requirements per UL 94 V-0
Operating Temperature	-40°C to +120°C
Vibration	20g, 3 Axis, 10 - 2000Hz
Mechanical Shock	300 g's
Backshell Interface	MIL-DTL-38999, Designator H
Mating System	Triple-start stub ACME
Mating Cycles	500

RJ45 CAT 6A Performance Specifications	
Property	**Description**
Material and Finish	
Shell/Coupling and Plating	Complete list of options available in the Material and Finish Options portion of this section
Contacts	crimp contacts: copper alloy, gold plated
RJ45 Insulator	PPS
Grommet, Peripheral Seal, Interfacial Seal, O-ring	Blended fluorosilicone/silicone elastomer, 30% silicone per ZZ-R-765, 70% fluorosilicone per MIL-R-25988
Shell Sizes	17 and 19
Shielding Sleeve	Material: Copper alloy Finish: Nickel
Electrical Specifications	
Data Rate	CAT 6A = 10G BASE-T
Current Rating	Cat 6A, 1.5 Amps
D.W.V.	1000 VDC (700 VAC)
I.R.	500 Mega ohms @ 500 VDC
Frequency	500 MHz, Cat 6A
Wiring	Straight through, Cat 6A
Cabling Length	Up to 100 meters.
Shield Continuity	Continuous through coupler or continuous coupler to shell
Environmental/Mechanical Performance	
Sealing	IP68 mated condition IP67 unmated condition
Outgassing	**Mod Code 186S** meets outgassing requirements per ASTM E 595 and meets NASA level 3 screening for standard reliability **Mod Code 928** meets outgassing requirements per UL 94 V-0
Operating Temperature	-40°C to +120°C
Vibration	20g, 3 Axis, 10 - 2000Hz
Mechanical Shock	300 g's
Backshell Interface	MIL-DTL-38999, Designator H
Mating System	Triple-start stub ACME
Mating Cycles	500

© 2022 Glenair, Inc • 1211 Air Way, Glendale, CA 91201 • 818-247-6000 • www.glenair.com • U.S. CAGE code 06324 • SuperNine Catalog
Dimensions in Inches (millimeters) are subject to change without notice.

ADVANCED PERFORMANCE

SuperNine® RJ45 CAT 6A

MIL-DTL-38999 Series III Type connectors

233-312 Plug with accessory threads

Part Number Development										
Sample Part Number	**233-312**	**NF**	**G6**	**-**	**17**	**6A**	**N**	**1**		
Series / Basic Part No.	**233-312** = Cat 6A interface for D38999 type shell									
Material/Finish	**NF** = Aluminum/cadmium olive drag **MT** = Aluminum/nickel PTFE **ME** = Aluminum/electroless nickel **ZR** = Aluminum/zinc-nickel Contact factory for additional options									
Connector Style	**G6** = Plug									
Plug Options	(-) = CAT 6A (28 AWG) **A** = CAT 6A (22-24 AWG)									
Shell Size	**17** and **19**									
RJ45 Category	**6A** = Cat 6A									
Alternate Polarization	**A**, **B**, **C**, **D**, **E**, **N** = Normal; Per MIL-DTL-38999									
RJ45 Orientation	**1**, **2**, **3**, **4**									
Strain Relief Style	**A** = Accessory threads (accepts standard D38999 backshells) **T** = Shrink boot **M** = Over mold **Omit** for standard									
Cable OD	**W** = Large cable OD up to .400 (10.16) **Omit** for cable OD .187/.312 (4.75/7.92)									

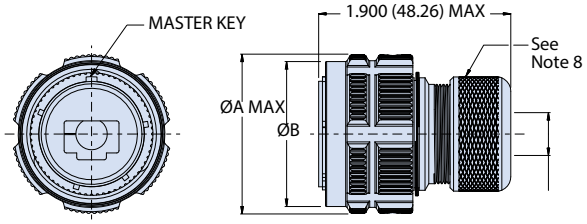

Strain Relief Style: Standard

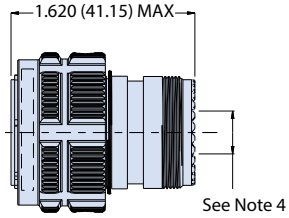

Strain Relief Style: A - Accessory Threads

RJ45 Orientation Options (Plug Face)

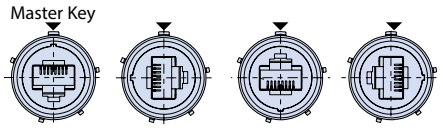

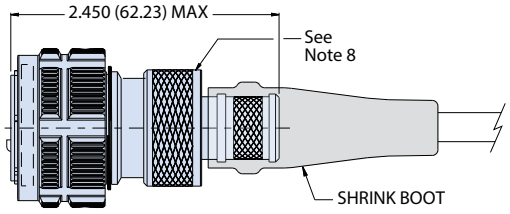

Strain Relief Style: T - Shrink Boot

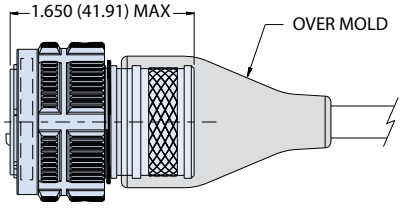

STRAIN RELIEF STYLE: M - OVER MOLD

Dimensions		
Shell Size	**ØA Max**	**ØB**
17	1.406 (35.71)	1.276 (32.41) 1.268 (32.21)
19	1.516 (38.51)	1.382 (35.10) 1.374 (34.90)

NOTES

1. Material/finish:
   - Barrel, coupling nut: see part number development. Composite coupling nut no plating required.
   - Insulators: high grade rigid dielectric/ N.A.
   - Seals: silicone based elastomer
   - Hardware: stainless steel/passivated
2. RJ45 plug specifications:
   - RJ45 plug cable maintains shield continuity
   - RoHS compliant

Electrical
- Current rating: 1 amp
- D.W.V.: 1000V DC/min
- I.R.: 500 Mega ohms minimum @ 1000V DC
- Operating temperature range: -20°C to +85°C

3. Meets IP68 in mated condition
4. Design accommodates cable outside diameter 0.187 (4.750) to 0.400 (10.16)
5. Design accommodates CAT 6A RJ45 modular plugs:
   (-) = CAT 6A, 28 AWG
   A = CAT 6A, 22-24 AWG
6. See assembly instructions AI233-312 for cable termination and connector assembly. Assembly instructions to be kitted with each shipment
7. CAT 6A modular plugs packaged loose for each plug connector.
8. Recommended torque value for different cable outside diameter.

Cable OD (in)	.187/.225	.225/.275	.275/.312	.312/.400
Torque (in/lbs)	20.6	18.3	12.6	10

© 2022 Glenair, Inc • 1211 Air Way, Glendale, CA 91201 • 818-247-6000 • www.glenair.com • U.S. CAGE code 06324 • SuperNine Catalog
Dimensions in Inches (millimeters) are subject to change without notice.

ADVANCED PERFORMANCE

SuperNine® RJ45 CAT 5e and 6A

MIL-DTL-38999 Series III Type connectors

233-300 Coupler with accessory threads



Plug
Front View



Receptacle
Front View



Receptacle
Rear View

Material and Finish[1]	
NF	Aluminum/Cadmium, Olive Drab
ME	Aluminum/Electroless Nickel
MT	Aluminum/Nickel PTFE
ZR	Aluminum/Black Zinc-Nickel

NOTES

1. See Section A for alternate key/ keyway positions and panel cutout dimensions
2. G option is inline shielded and grounded to shell, available for receptacle only
3. Front panel mount only
4. Meets IP67 in unmated condition, IP68 mated
5. For shrink boot see part number 770-028
6. Receptacle has RJ45 jack. Plug has RJ45 plug to jack

Part Number Development									
Sample Part Number	233-300	NF	00	G	17	5H	N	1	T
Basic Number	233-300								
Finish	See Material and Finish table								
Connector Style[1]	See Connector Style table								
Insert-to-Shell Grounding	– = Inline shielded RJ45 insert G = Shielded and grounded to shell[2]								
Shell Size	17 or 19								
RJ45 Category	5H = CAT 5e 6A = CAT 6A (CAT 6A receptacle only, for plug see 233-312)								
Alternate Key Position[1]	Per MIL-DTL-38999 A, B, C, D, E, N = Normal								
RJ45 Orientation	1, 2, 3, or 4								
Shrink Boot	T = Part No. 770-028; see accessory section. (Omit for None)								

Connector Style[1]	
00	Wall mount receptacle with slotted holes[3]
01	Wall mount receptacle with slotted holes and metal cable gland
05	Inline Receptacle
07	rear panel mount, jam nut receptacle
08	In-line receptacle with metal cable gland
D0	Wall mount receptacle with round holes
D1	Wall mount receptacle with round holes and metal gland
CM	Wall mount receptacle with metric clinch nuts
CG	Wall mount receptacle with metric clinch nuts and metal gland
CS	Wall Mount Receptacle with standard clinch nuts
G6	plug
G9	Plug with metal cable gland[5]

RJ45 Orientation Options (Plug Face)

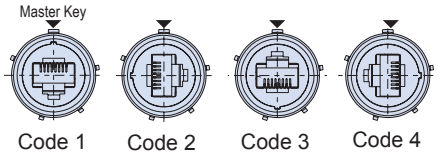

RJ45 Orientation Options (Receptacle Face)

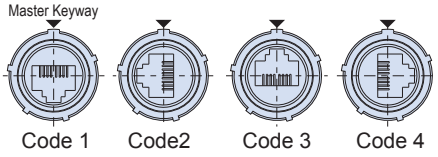

All external dimensions, features, etc. compliant with D38999/20, /24, &/26. Consult factory for additional information.

G6 - PLUG WITH INTEGRAL SHRINK BOOT

G6 and G7 - plug Dimensions				
Shell Size	A Dia Max		B Dia	
	in	mm	in	mm
17	1.406	35.71	1.276 1.268	32.41 32.21
19	1.516	38.51	1.382 1.374	35.10 34.90

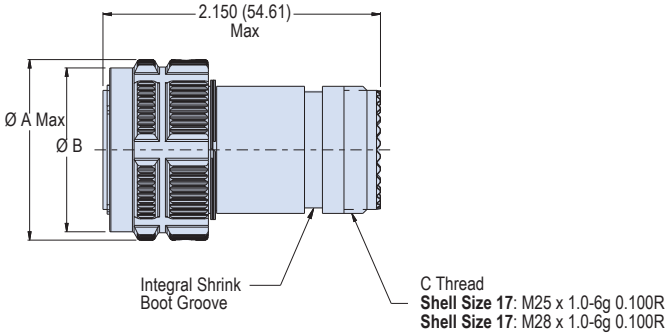

© 2022 Glenair, Inc • 1211 Air Way, Glendale, CA 91201 • 818-247-6000 • www.glenair.com • U.S. CAGE code 06324 • SuperNine Catalog
Dimensions in Inches (millimeters) are subject to change without notice.

SuperNine® RJ45 CAT 5e and 6A

MIL-DTL-38999 Series III Type connectors

233-300 Coupler with accessory threads

07 - REAR PANEL MOUNT JAM NUT AND 05 OR 08 - INLINE RECEPTACLES

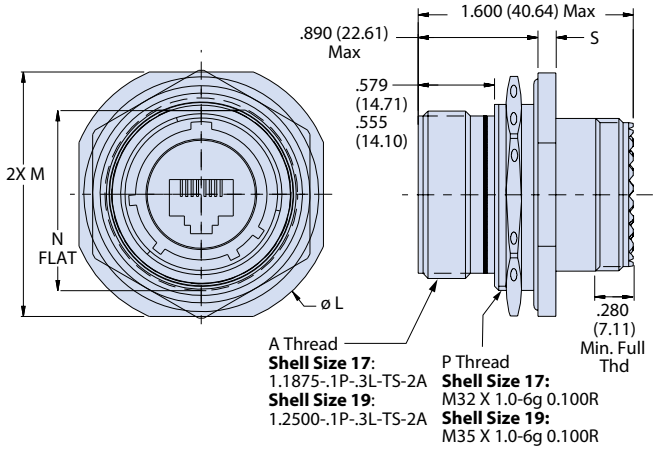

07 Jam Nut Receptacle (mating face and side view)

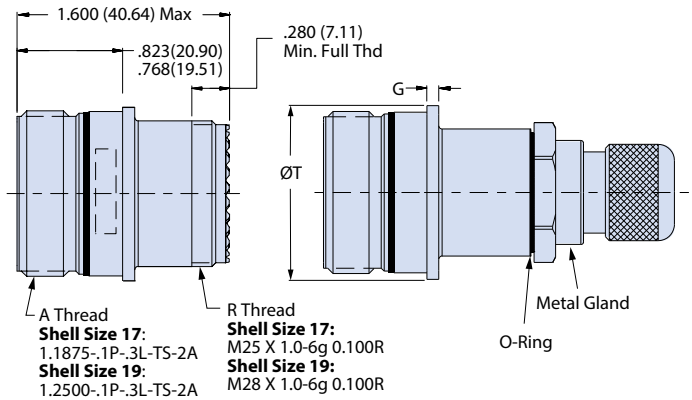

05 Inline with Acceesory Threads and 08 Inline with Metal Gland (side view only)

00, 01, DO, D1, CM AND CG - WALL MOUNT RECEPTACLES WITH ACCESSSORY THREADS OR METAL GLAND

00, 01 - Wall Mount Receptacle with Slotted Holes (Mating Face)

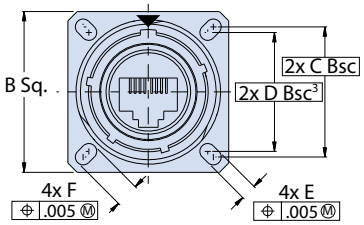

D0, D1 - Wall Mount Receptacle with Round Holes (Mating Face)

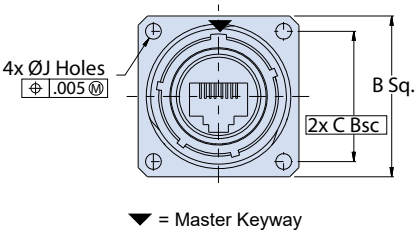

CM Metric and CS Standard - Wall Mount Receptacles (Mating Face and Side View)

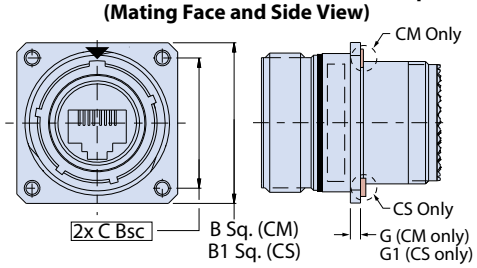

Note:
See CM & CS style for side view and style specific dimensions.

00, D0, CM - Wall Mount Receptacle

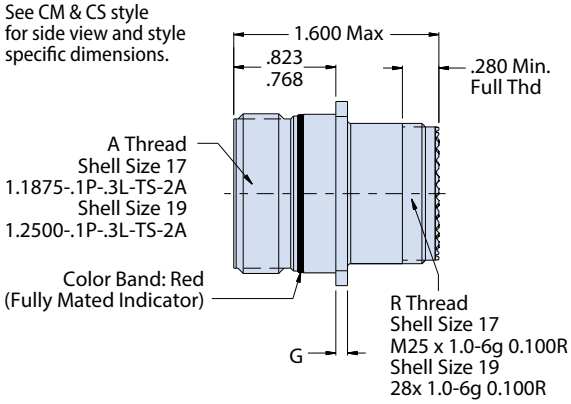

Rear View

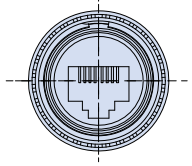

For all 233-300 plug and receptacle styles. Position rotates relative to Code (Code 1 shown)

01, D1, CG - Wall Mount Receptacle with Metal Gland

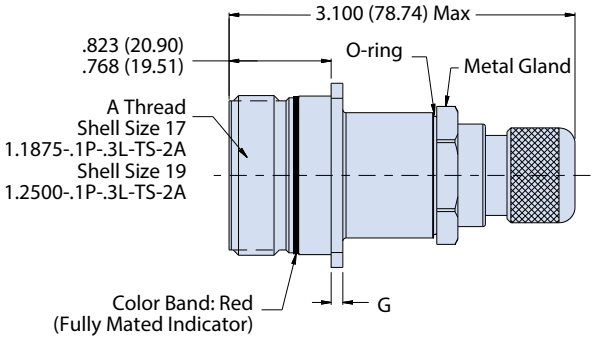

Jam Nut and Inline Receptacle Dimensions

Shell Size	ØL	M	N	S	ØT Max
17	1.764 (44.81) 1.740 (44.20)	1.642 (41.71) 1.610 (40.89)	1.191 (30.25) 1.181 (30.00)	.122 (3.09) .083 (2.11)	1.275 (32.39)
19	1.949 (49.50) 1.925 (48.90)	1.827 (46.41) 1.795 (45.59)	1.316 (33.43) 1.306 (33.17)	.153 (3.89) .114 (2.90)	1.337 (33.96)

Wall Mount Receptacle Dimensions

Shell Size	B Sq	B1 Sq	C Bsc	D Bsc[3]	E	F	G	G1	ØJ Holes
17	1.323 (33.60) 1.299 (32.99)	1.437 (34.50) 1.397 (35.48)	1.062 (26.97)	.969(24.61)	.136 (3.45)	.202 (5.13)	.098 (2.49)	.122 (3.10) .083 (.58)	.136 (3.45)
19	1.449 (36.80) 1.425 (36.20)	1.531 (38.89) 1.491 (37.87)	1.156 (29.36)	1.062 (26.97)	.120 (3.05)	.186 (4.72)	.083 (2.11)	.153 (3.89) .144 (3.66)	.120 (3.05)

© 2022 Glenair, Inc • 1211 Air Way, Glendale, CA 91201 • 818-247-6000 • www.glenair.com • U.S. CAGE code 06324 • SuperNine Catalog
Dimensions in Inches (millimeters) are subject to change without notice.

ADVANCED PERFORMANCE

SuperNine® RJ45 CAT 5e

MIL-DTL-38999 Series III Type connectors

233-301 Receptacle with crimp removable contacts



Receptacle front View



Receptacle rear View

Part Number Development									
Sample Part Number	**233-301**	**NF**	**00**	**G**	**17**	**5H**	**N**	**1**	**T**
Basic Number	**233-301**								
Finish	See Material and Finish table								
Connector Style	See Connector Style table								
Insert-to-Shell Grounding	**–** = Inline shielded RJ45 insert **G** = Shielded and grounded to shell[2]								
Shell Size	**17** or **19**								
RJ45 Category	**5H** = CAT 5e For Cat 6A applications consult factory								
Alternate Key Position[1]	Per MIL-DTL-38999 **A**, **B**, **C**, **D**, **E**, **N** = Normal								
RJ45 Orientation	**1**, **2**, **3**, or **4**								
Shrink Boot	**T** = Part No. 770-028 (Omit for None)								

Connector Style[1]	
00	Wall mount receptacle with slotted holes
05	Inline Receptacle
07	rear panel mount, jam nut receptacle
D0	Wall mount receptacle with round holes
CM	Wall mount receptacle with metric clinch nuts
CS	Wall mount receptacle with metric clinch nuts
G6	plug

Material and Finish	
NF	Aluminum/Cadmium, Olive Drab
ME	Aluminum/Electroless Nickel
MT	Aluminum/Nickel PTFE
ZR	Aluminum/Black Zinc-Nickel

RJ45 Orientation Options (Plug Face)

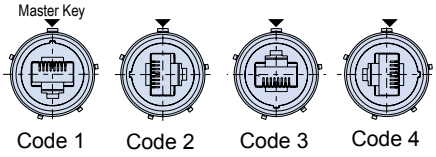

RJ45 Orientation Options (Receptacle Face)

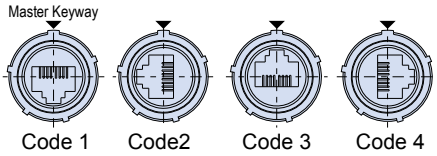

NOTES

1. See Section A for alternate key/keyway positions and panel cutout dimensions
2. G option is inline shielded and grounded to shell, available for receptacle only
3. Front panel mount only
4. Crimp removable size 22 pin contacts (M39029/58-360) supplied loose
5. Meets IP67 in unmated condition and IP68 mated condition
6. For shrink boot see part number 770-028
7. Receptacle connector has RJ45 jack

All external dimensions, features, etc. compliant with D38999/20, /24, &/26. Consult factory for additional information.

G6 PLUG WITH ACCESSORY THREADS

Plug Dimensions				
Shell Size	A Dia Max		B Dia	
	in	mm	in	mm
17	1.406	35.71	.928 .922	23.57 23.42
19	1.516	38.51	1.033 1.027	26.24 26.09

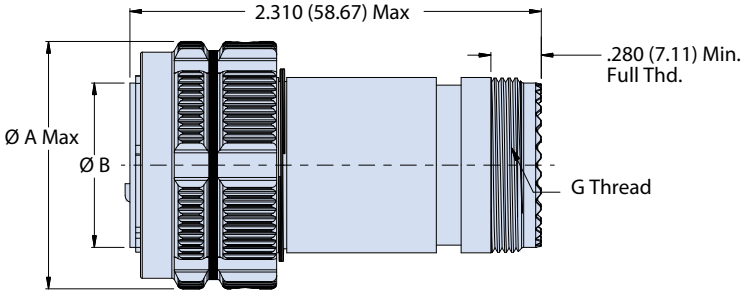

© 2022 Glenair, Inc • 1211 Air Way, Glendale, CA 91201 • 818-247-6000 • www.glenair.com • U.S. CAGE code 06324 • SuperNine Catalog
Dimensions in Inches (millimeters) are subject to change without notice.

SuperNine® RJ45 CAT 5e

MIL-DTL-38999 Series III Type connectors

233-301 Receptacle with crimp removable contacts

05 - INLINE AND 07 - REAR PANEL MOUNT, JAM NUT RECEPTACLE WITH ACCESSORY THREADS

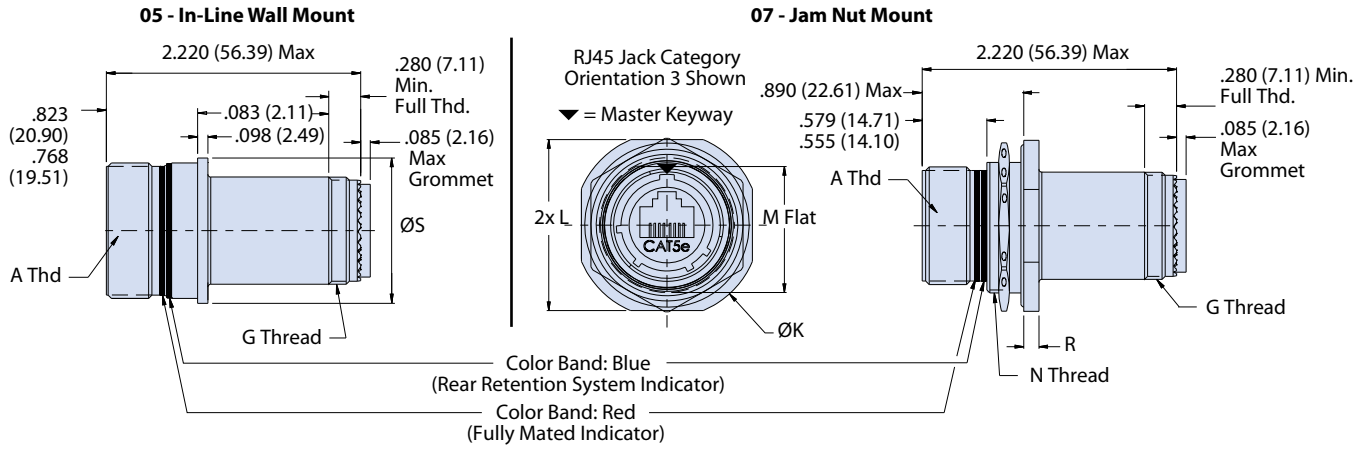

00, D0 AND CM - WALL MOUNT RECEPTACLES WITH ACCESSORY THREADS

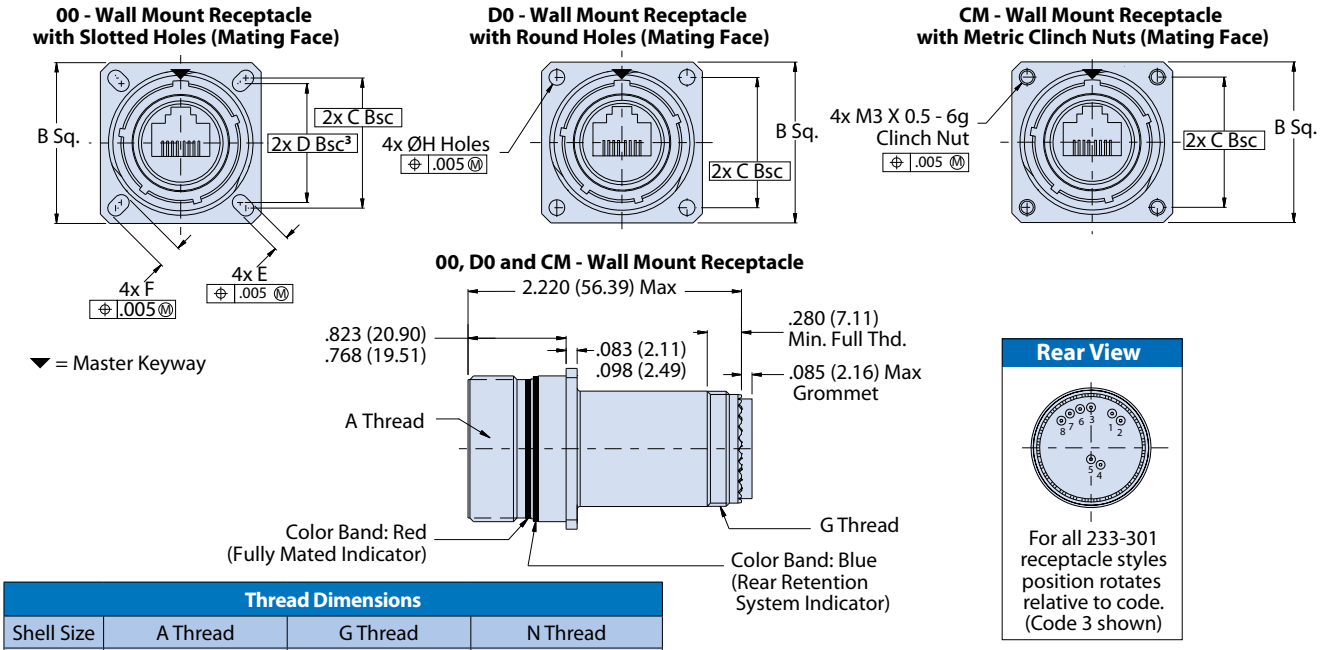

Thread Dimensions			
Shell Size	A Thread	G Thread	N Thread
17	1.1875-.1P-.3L-TS-2A	M25 x 1.0-6g 0.100R	M32 x 1.0-6g 0.100R
19	1.2500-.1P-.3L-TS-2A	M28x 1.0-6g 0.100R	M35 x 1.0-6g 0.100R

In-line and Jam Nut Receptacle Dimensions					
Shell Size	ØK	L	M	R	ØS
17	1.764 (44.81) 1.740 (44.20)	1.642 (41.71) 1.610 (40.89)	1.191 () 1.181 ()	.122 (3.09) .083 (2.11)	1.275 (32.39)
19	1.949 (49.50) 1.925 (48.90)	1.827 (46.51) 1.795 (45.59)	1.316 () 1.305 ()	.153 (3.89) .114 (2.90)	1.337 (33.96)

Wall Mount Receptacle Dimensions						
Shell Size	B Sq	C Bsc	D Bsc³	E	F	Ø H Holes
17	1.323 (33.60) 1.299 (32.99)	1.062 (26.97)	.969 (24.61)	.136 (3.45)	.202 (5.13)	.136 (3.45)
19	1.449 (36.80) 1.425 (36.20)	1.156 (29.36)	1.062 (26.97)	.120 (3.05)	.186 (4.72)	.120 (3.05)

© 2022 Glenair, Inc • 1211 Air Way, Glendale, CA 91201 • 818-247-6000 • www.glenair.com • U.S. CAGE code 06324 • SuperNine Catalog
Dimensions in Inches (millimeters) are subject to change without notice.

ADVANCED PERFORMANCE

SuperNine® RJ45 CAT 5e

MIL-DTL-38999 Series III Type connectors

233-302 Receptacle with PC tails



Receptacle front View



Receptacle rear View

Part Number Development								
Sample Part Number	**233-302**	**NF**	**00**	**G**	**17**	**5H**	**N**	**1**
Basic Number	**233-302**							
Finish	See Material and Finish table							
Connector Style[1]	See Connector Style table							
Insert-to-Shell Grounding	**–** = Inline shielded RJ45 insert **G** = Shielded and grounded to shell[2]							
Shell Size	**17** or **19**							
RJ45 Category	**5H** = CAT 5e For Cat 6A applications consult factory							
Alternate Key Position[1]	Per MIL-DTL-38999 **A**, **B**, **C**, **D**, **E**, **N** = Normal							
RJ45 Orientation	**1**, **2**, **3**, or **4**							

RJ45 ORIENTATION OPTIONS AND PCB LAYOUT

CODE 1

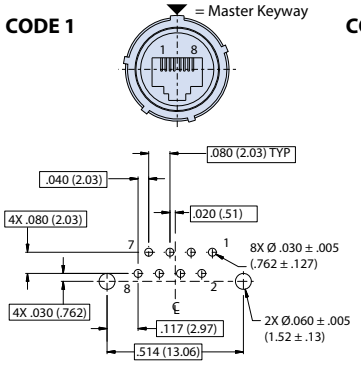

CODE 2

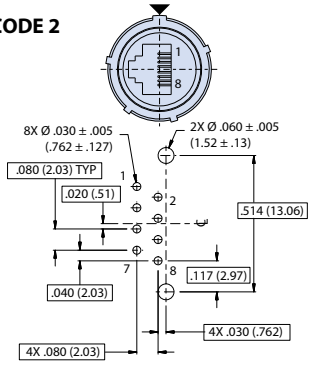

CODE 3

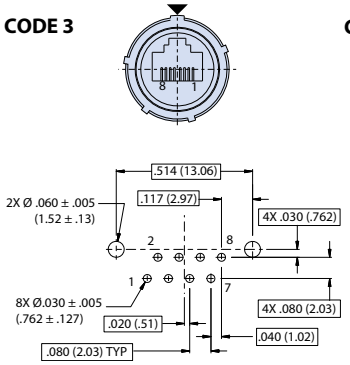

CODE 4

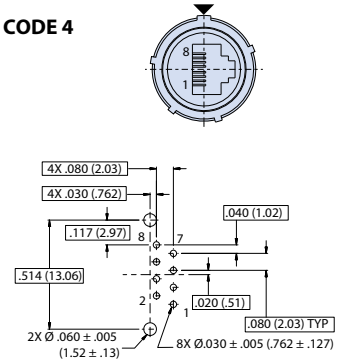

Connector Style[1]	
00	Wall mount receptacle with slotted holes
07	rear panel mount, jam nut receptacle
D0	Wall mount receptacle with round holes
CM	Wall mount receptacle with metric clinch nuts

Material and Finish	
NF	Aluminum/Cadmium, Olive Drab
ME	Aluminum/Electroless Nickel
MT	Aluminum/Nickel PTFE
ZR	Aluminum/Black Zinc-Nickel

Jam Nut Dimensions				
Shell Size	**Dia K**	**L**	**M Flat**	**P**
17	1.764 (44.81) 1.740 (44.20)	1.642 (41.71) 1.610 (40.89)	1.191 (30.25) 1.181 (30.00)	.090 (2.29) .080 (2.03)
19	1.949 (49.50) 1.925 (48.90)	1.827 (46.41) 1.795 (45.59)	1.316 (33.43) 1.306 (33.17)	.150 (3.81) .140 (3.56)

Wall Mount Receptacle Dimensions								
Shell Size	**B Sq**	**B' Sq**	**C BSC**	**D BSC**[3]	**E**	**F**	**G'**	**Ø H Holes**
17	1.323 (33.60) 1.299 (32.99)	1.437 (36.50) 1.397 (35.48)	1.062 (26.97)	.969 (24.61)	.136 (3.45) .120 (3.05)	.202 (5.13) .186 (4.72)	.122 (3.10) .083 (2.11)	0.136 (3.45) 0.120 (3.05)
19	1.449 (36.80) 1.425 (36.20)	1.531 (38.89) 1.491 (37.87)	1.156 (29.36)	1.062 (26.97)			.153 (3.89) .114 (2.90)	

NOTES

1. See Section A for alternate key/keyway positions and panel cutout dimensions
2. G option is inline shielded and grounded to shell, available for receptacle only
3. Front panel mount only
4. Meets IP67 in unmated condition, IP68 mated
5. Receptacle connector has RJ45 jack

© 2022 Glenair, Inc • 1211 Air Way, Glendale, CA 91201 • 818-247-6000 • www.glenair.com • U.S. CAGE code 06324 • SuperNine Catalog
Dimensions in Inches (millimeters) are subject to change without notice.

SuperNine® RJ45 CAT 5e

MIL-DTL-38999 Series III Type connectors

233-302 Receptacle with PC tails

07 - REAR PANEL MOUNT, JAM NUT RECEPTACLE

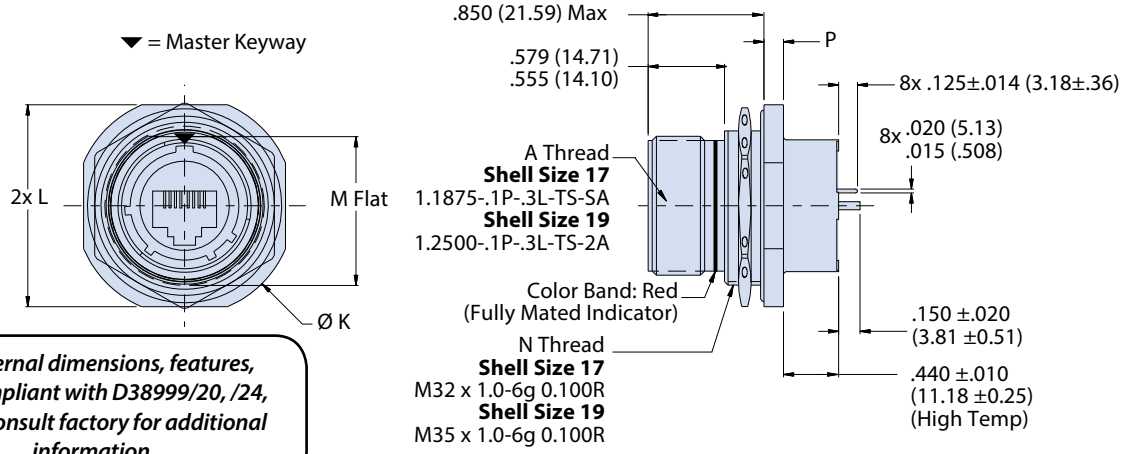

All external dimensions, features, etc. compliant with D38999/20, /24, &/26. Consult factory for additional information.

00, DO, CM AND CS - WALL MOUNT RECEPTACLES

00 - Wall Mount Receptacle with Slotted Holes (Mating Face)

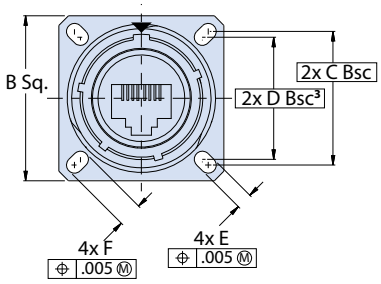

D0 - Wall Mount Receptacle With Round Holes (Mating Face)

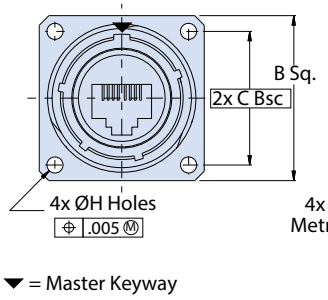

CM & CS - Wall Mount Receptacle With Metric/Std Clinch Nuts (Mating Face)

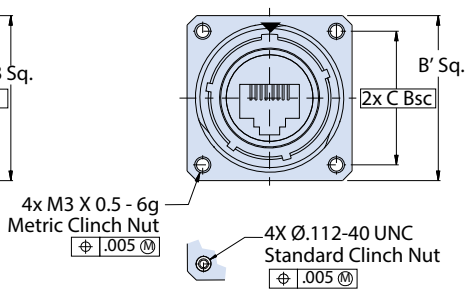

00 and D0 - Wall Mount Receptacle (Side View)

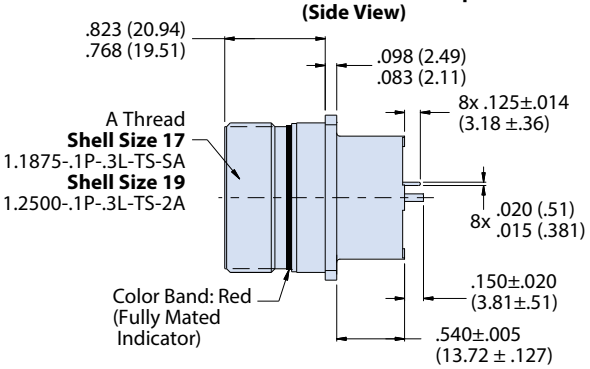

CS and CM - Wall Mount Receptacle (Side View)

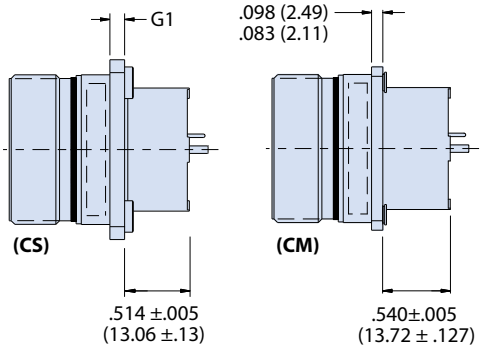

Rear View

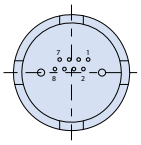

For all 233-302 receptacle styles position rotates relative to code (Code 1 shown)

© 2022 Glenair, Inc • 1211 Air Way, Glendale, CA 91201 • 818-247-6000 • www.glenair.com • U.S. CAGE code 06324 • SuperNine Catalog
Dimensions in Inches (millimeters) are subject to change without notice.

ADVANCED PERFORMANCE

SuperNine® RJ45 CAT 5e

MIL-DTL-38999 Series III Type connectors

233-303 Receptacle with solder cups



Part Number Development								
Sample Part Number	**233-303**	**NF**	**00**	**G**	**17**	**5H**	**N**	**1**
Basic Number	**233-303**							
Finish	See Material and Finish table							
Connector Style[1]	See Connector Style table							
Insert-to-Shell Grounding	**–** = Inline shielded RJ45 insert **G** = Shielded and grounded to shell[2]							
Shell Size	**17** or **19**							
RJ45 Category	**5H** = CAT 5e For Cat 6A applications consult factory							
Alternate Key Position[1]	Per MIL-DTL-38999 **A**, **B**, **C**, **D**, **E**, **N** = Normal							
RJ45 Orientation	**1**, **2**, **3**, or **4**							

RJ45 ORIENTATION OPTIONS

CODE 1 = Master Keyway 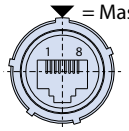

CODE 2 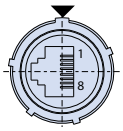

CODE 3 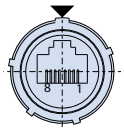

CODE 4 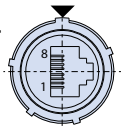

Jam Nut Dimensions								
Shell Size	**Ø J**		**K**		**L Flat**		**M**	
	in	**mm**	**in**	**mm**	**in**	**mm**	**in**	**mm**
17	1.764 1.740	44.81 44.20	1.642 1.610	41.71 40.89	1.191 1.181	30.25 30.00	.122 .083	3.10 2.11
19	1.949 1.925	49.50 48.90	1.827 1.795	46.41 45.59	1.316 1.306	33.43 33.17	.153 .114	3.89 2.90

Material and Finish	
NF	Aluminum/Cadmium Olive Drab
ME	Aluminum/Electroless Nickel
MT	Aluminum/Nickel PTFE
ZR	Aluminum/Black Zinc-Nickel

Wall Mount Receptacle Dimensions												
Shell Size	**B Sq**		**C Bsc**		**D Bsc**		**E**		**F**		**Ø G Holes**	
	In	**mm**	**In**	**mm**	**In**	**mm**	**In**	**mm**	**In**	**mm**	**In**	**mm**
17	1.323 1.299	33.60 32.99	1.062	26.97	.969	24.61	.136 .120	3.45 3.05	.202 .186	5.13 4.72	0.136 0.120	3.45 3.05
19	1.449 1.425	36.80 36.20	1.156	29.36	1.062	26.97						

Connector Style	
00	Wall mount receptacle with slotted holes
07	rear panel mount, jam nut receptacle
D0	Wall mount receptacle with round holes
CM	Wall mount receptacle with metric clinch nuts

All external dimensions, features, etc. compliant with D38999/20, /24, &/26. Consult factory for additional information.

NOTES

1. See Section A for alternate key/keyway positions and panel cutout dimensions
2. G option is inline shielded and grounded to shell, available for receptacle only
3. Front panel mount only
4. Meets IP67 in unmated condition, IP68 mated
5. Receptacle connector has RJ45 jack
6. Materials and finishes
   - Shell, jam nut: Al alloy/optional
   - Seals: Silicone based elastomer
   - RJ45 coupler housing: UL94V-0 compliant ABS or PPS
   - Contacts: Copper alloy, gold plated
   - Hardware: Stainless steel/passivated

© 2022 Glenair, Inc • 1211 Air Way, Glendale, CA 91201 • 818-247-6000 • www.glenair.com • U.S. CAGE code 06324 • SuperNine Catalog
Dimensions in Inches (millimeters) are subject to change without notice.

SuperNine® RJ45 CAT 5e

MIL-DTL-38999 Series III Type connectors

233-303 Receptacle with solder cups

07 - REAR PANEL MOUNT, JAM NUT RECEPTACLE

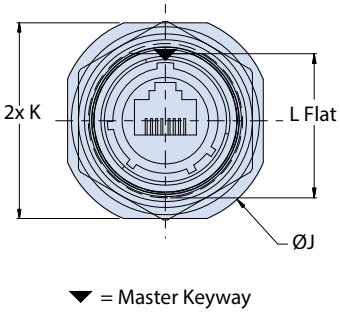

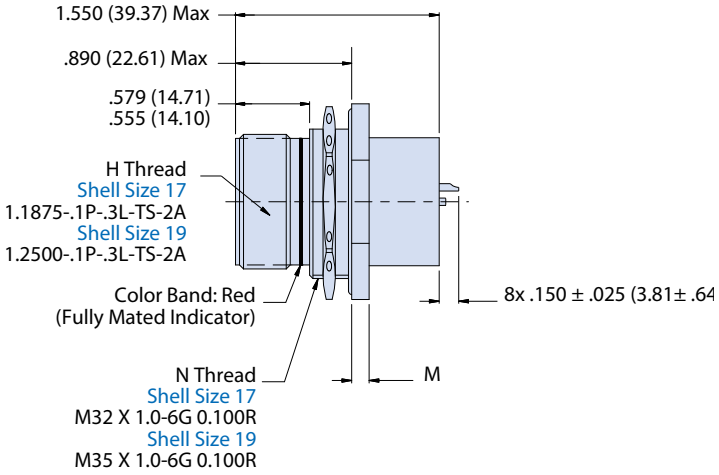

00, DO AND CM - WALL MOUNT RECEPTACLES

00 - Wall Mount Receptacle
with Slotted Holes (Mating Face)

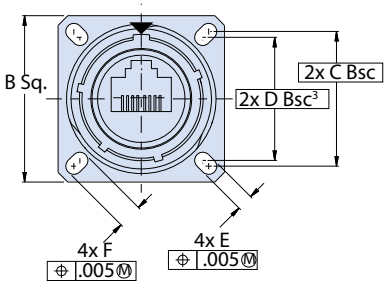

D0 - Wall Mount Receptacle
with Round Holes (Mating Face)

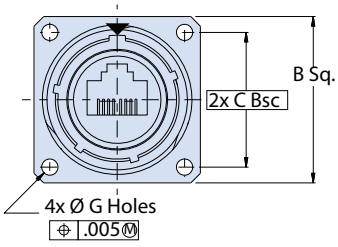

CM - Wall Mount Receptacle
with Metric Clinch Nuts (Mating Face)

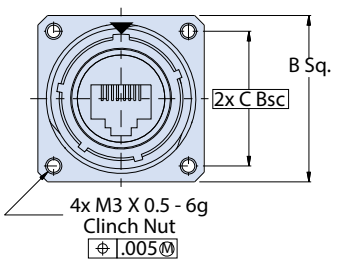

▼ = Master Keyway

00 and D0 - Wall Mount Receptacle
(Side View)

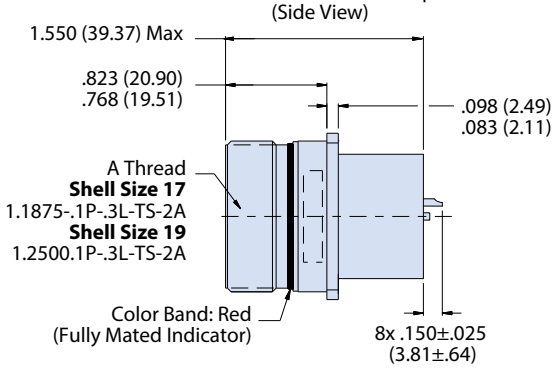

00 and D0 - Wall Mount Receptacle
(Side View)

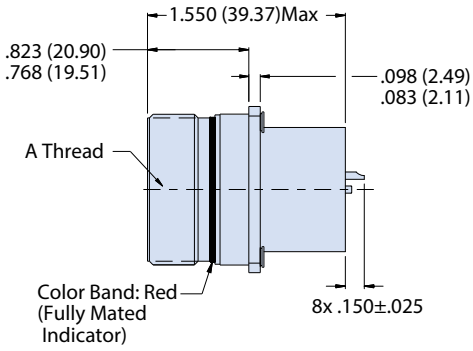

Rear View

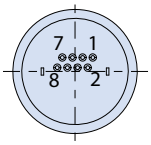

For All 233-303 Receptacle Styles Position Rotates Relative To Code (Code 1 Shown)

© 2022 Glenair, Inc • 1211 Air Way, Glendale, CA 91201 • 818-247-6000 • www.glenair.com • U.S. CAGE code 06324 • SuperNine Catalog
Dimensions in Inches (millimeters) are subject to change without notice.

ADVANCED PERFORMANCE

SuperNine® RJ45 CAT 5e

MIL-DTL-38999 Series III Type connectors

233-304 Plug and recptacle adapter with accessory thread

Part Number Development										
Sample Part Number	**233-304**	**NF**	**00**	**17**	**G**	**35**	**P**	**5H**	**N**	**T**
Basic Number	**233-304**									
Finish	See Material and Finish table									
Connector Style[1]	See Connector Style table									
Shell Size	**17**[6] consult factory for other shell sizes									
Insert-to-Shell Grounding[2]	**–** = Inline shielded RJ45 insert **G** = Shielded and grounded to shell									
Insert Arrangement	Per MIL-STD-1560; **17-26** or **17-35**[6]									
Contact Style	**P** = Pin **S** = Socket									
RJ45 Category	**5H** = CAT 5e For Cat 6A applications consult factory									
Alternate Key Position[1]	Per MIL-DTL-38999 **A**, **B**, **C**, **D**, **E**, **N** = Normal									
Shrink Boot	**T** = Part No. 770-028 (Omit for None)									

NOTES

1. See Section A for alternate key/keyway positions and panel cutout dimensions
2. G option is inline shielded and grounded to shell, available for receptacle only
3. Connector style 00 with slotted hole is front panel mount only
4. Meets IP67 in unmated condition, IP68 mated
5. Both plug and receptacle connectors have rear RJ45 jack
6. Consult factory for alternate insert arrangements

Material and Finish	
NF	Aluminum/Cadmium Olive Drab
ME	Aluminum/Electroless Nickel
MT	Aluminum/Nickel PTFE
ZR	Aluminum/Black Zinc-Nickel

Connector Style[1]	
00	Wall mount receptacle with slotted holes[3]
05	Inline Receptacle
07	rear panel mount, jam nut receptacle
D0	Wall mount receptacle with round holes
G6	plug
CM	Wall mount receptacle with metric clinch nuts

Thread Dimensions			
Shell Size	A Thread	G Thread	N Thread
17	1.1875-.1P-.3L-TS-2A	M25 x 1.0-6g 0.100R	M32 x 1.0-6g 0.100R
19	1.2500-.1P-.3L-TS-2A	M28x 1.0-6g 0.100R	M35 x 1.0-6g 0.100R

Wall Mount Receptacle Dimensions												
Shell Size	B Sq		C BSC		D BSC		E		F		Ø H Holes	
	In	mm	In	mm	In	mm	In	mm	In	mm	In	mm
17	1.323 1.299	33.60 32.99	1.062	26.97	.969	24.61	.136 .120	3.45 3.05	.202 .186	5.13 4.72	.136 .120	3.45 3.05
19	1.449 1.425	36.80 36.20	1.156	29.36	1.062	26.97						

Jam Nut and Inline Dimensions										
Shell Size	Ø K		L		M Flat		R		S	
	in	mm	in	mm	in	mm	In	mm	In	mm
17	1.764 1.740	44.81 44.20	1.642 1.610	41.71 40.89	1.191 1.181	30.25 30.00	.122 .083	3.10 2.11	1.406	35.71
19	1.949 1.925	49.50 48.90	1.827 1.795	46.41 45.59	1.316 1.306	33.43 33.17	.153 .114	3.89 2.90	1.516	38.51

Wiring Diagram for Ethernet 10base-T & 100 Base-TX
17-35 or (17-26 in parenthesis) Arrangement

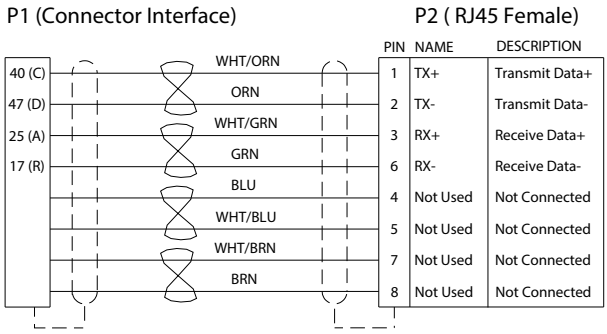

Wiring Diagram for Ethernet 1000base-T (Gigabit Ethernet)
17-35 or (17-26 in parenthesis) Arrangement

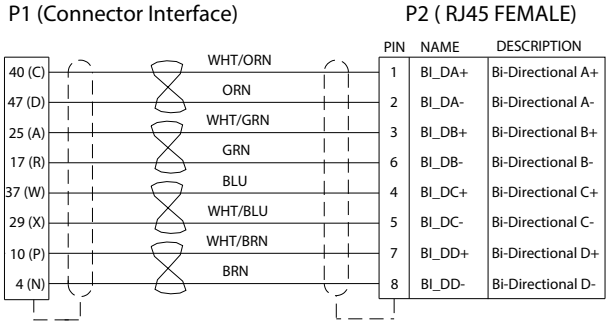

Color Codes Per EIA/TIA 568B

© 2022 Glenair, Inc • 1211 Air Way, Glendale, CA 91201 • 818-247-6000 • www.glenair.com • U.S. CAGE code 06324 • SuperNine Catalog
Dimensions in Inches (millimeters) are subject to change without notice.

SuperNine® RJ45 CAT 5e

MIL-DTL-38999 Series III Type connectors

233-304 Plug and receptacle adapter with accessory thread

G6 - PLUG WITH ACCESSORY THREADS

Plug Dimensions				
Shell Size	Ø A		Ø B	
	in	mm	in	mm
17	1.406	35.71	.928 .922	23.57 23.42
19	1.516	38.51	1.033 1.027	26.24 26.09

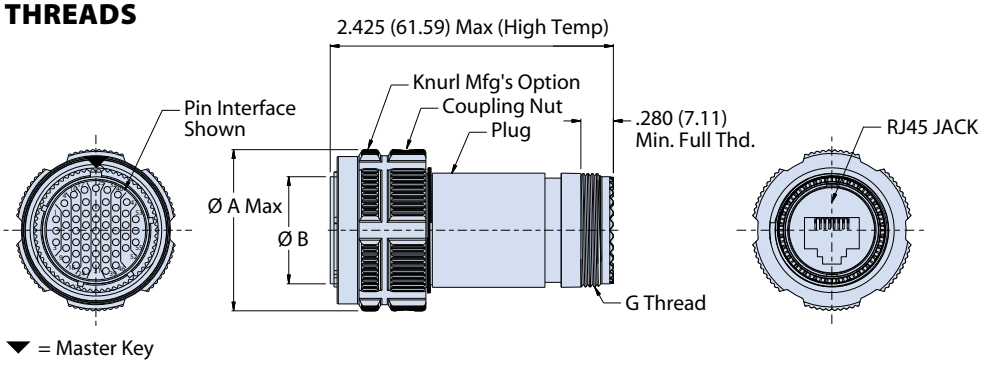

07 - REAR PANEL MOUNT, JAM NUT AND 05 - INLINE RECEPTACLE WITH ACCESSORY THREADS

Jam Nut Receptacle

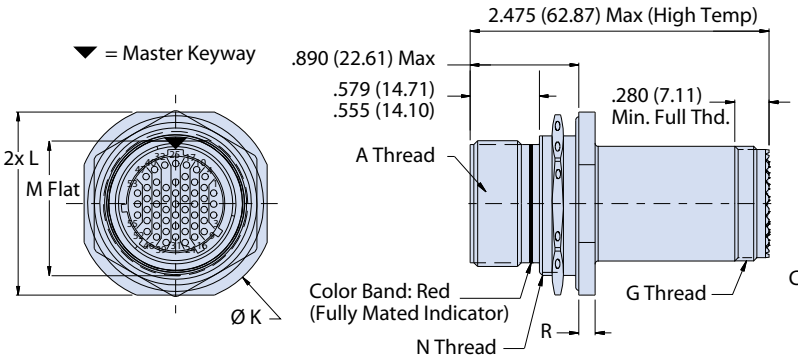

Inline Receptacle (side view only)

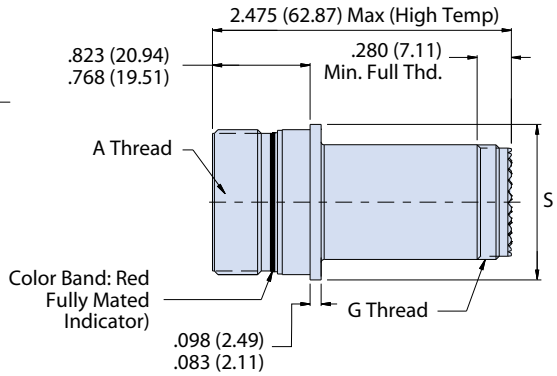

00, DO AND CM - WALL MOUNT RECEPTACLES WITH ACCESSORY THREADS

00 - Wall Mount Receptacle with Slotted Holes (Mating Face)

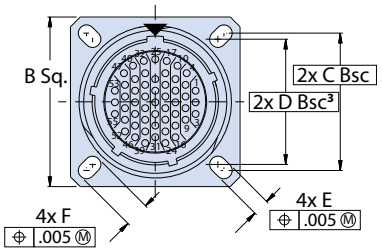

D0 - Wall Mount Receptacle With Round Holes (Mating Face)

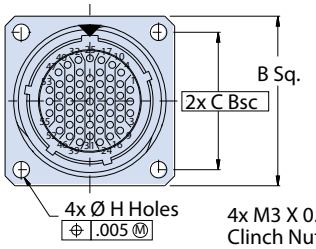

CM - Wall Mount Receptacle With Metric Clinch Nuts (Mating Face)

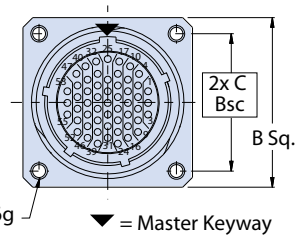

All external dimensions, features, etc. compliant with D38999/20, /24, &/26. Consult factory for additional information.

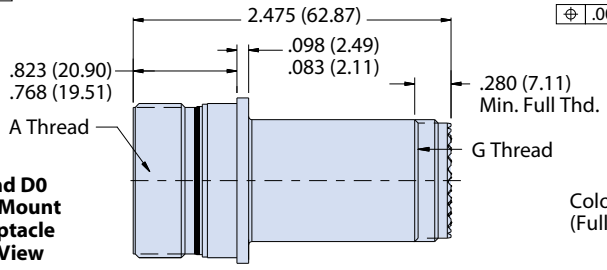

00 and D0 Wall Mount Receptacle Side View

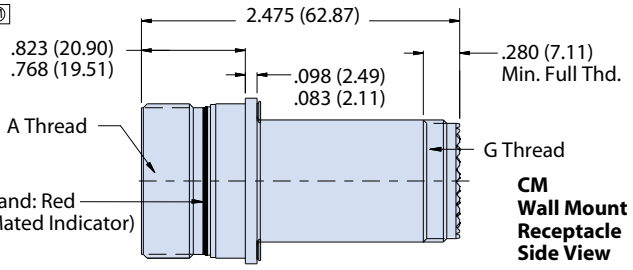

CM Wall Mount Receptacle Side View

© 2022 Glenair, Inc • 1211 Air Way, Glendale, CA 91201 • 818-247-6000 • www.glenair.com • U.S. CAGE code 06324 • SuperNine Catalog

Dimensions in Inches (millimeters) are subject to change without notice.

ADVANCED PERFORMANCE

SuperNine® RJ45 CAT 5e

MIL-DTL-38999 Series III Type connectors

233-305 Quadrax interface adapter with accessory threads



Receptacle front View



Receptacle rear View

Part Number Development									
Sample Part Number	**233-305**	**NF**	**00**	**-**	**17**	**5H**	**P**	**N**	**T**
Basic Number	**233-305**								
Finish	See Material and Finish table								
Connector Style	See Connector Style table								
Insert-to-Shell Grounding[2]	**–** = Inline shielded RJ45 insert **G** = Shielded and grounded to shell								
Shell Size	**17** or **19**								
RJ45 Category	**5H** = CAT 5e For Cat 6A applications consult factory								
Contact Style	**P** = Pin **S** = Socket								
Alternate Key Position[1]	**A**, **B**, **C**, **D**, **E**, **N** = Normal; Per MIL-DTL-38999								
Shrink Boot	**T** = Part No. 770-028 (Omit for None)								

Partial View Of Connector Quadrax Interface

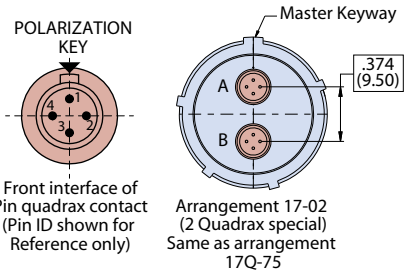

NOTES

1. See Section A for alternate key/keyway positions and panel cutout dimensions
2. G option is inline shielded and grounded to shell, available for receptacle only
3. Pin contact mates with P/N 854-002 Socket contact mates with P/N 854-001
4. Connector style 00 with slotted hole is front panel mount only
5. Meets IP67 in unmated condition, IP68 mated
6. Both plug and receptacle connectors have rear RJ45 jack

Wiring Diagram for Ethernet 10base-T & 100 Base-TX (Color Codes Per EIA/TIA 568B)

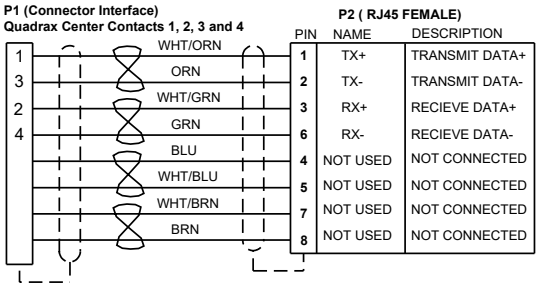

Wiring Diagram for Ethernet 1000base-T (Gigabit Ethernet) (Color Codes Per EIA/TIA 568B)

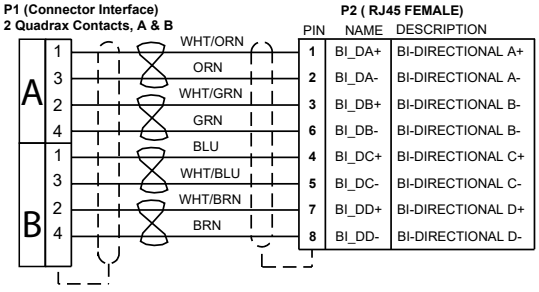

Material and Finish	
NF	Aluminum/Cadmium, Olive Drab
ME	Aluminum/Electroless Nickel
MT	Aluminum/Nickel PTFE
ZR	Aluminum/Black Zinc-Nickel

Connector Style	
05	Inline Receptacle
07	rear panel mount, jam nut receptacle
00	Wall mount receptacle with slotted holes
D0	Wall mount receptacle with round holes
CM	Wall mount receptacle with metric clinch nuts
G6	plug

Thread Dimensions			
Shell Size	A Thread	G Thread	N Thread
17	1.1875-.1P-.3L-TS-2A	M25 x 1.0-6g 0.100R	M32 x 1.0-6g 0.100R
19	1.2500-.1P-.3L-TS-2A	M28x 1.0-6g 0.100R	M35 x 1.0-6g 0.100R

Jam Nut Dimensions					
Shell Size	Ø K	L	M Flat	R	Ø S
17	1.764 (44.81) 1.740 (44.20)	1.642 (41.71) 1.610 (40.89)	1.191 (30.25) 1.181 (30.00)	.122 (3.10) .083 (2.11)	1.275 (32.39)
19	1.949 (49.50) 1.925 (48.90)	1.827 (46.41) 1.795 (45.59)	1.316 (33.43) 1.306 (33.17)	.153 (3.89) .114 (2.90)	1.337 (33.96)

Wall Mount Receptacle Dimensions						
Shell Size	B Sq	C BSC	D BSC	E	F	Ø H Holes
17	1.323 (33.60) 1.299 (32.99)	1.062 (26.97)	.969 (24.61)	.136 (3.45) .120 (3.05)	.202 (5.13) .186 (4.72)	.136 (3.45) .120 (3.05)
19	1.449 (36.80) 1.425 (36.20)	1.156 (29.36)	1.062 (26.97)			

© 2022 Glenair, Inc • 1211 Air Way, Glendale, CA 91201 • 818-247-6000 • www.glenair.com • U.S. CAGE code 06324 • SuperNine Catalog
Dimensions in Inches (millimeters) are subject to change without notice.

SuperNine® RJ45 CAT 5e

MIL-DTL-38999 Series III Type connectors

233-305 Quadrax interface adapter with accessory threads

G6 - PLUG WITH ACCESSORY THREADS

Plug Dimensions				
Shell Size	Ø A		Ø B	
	in	mm	in	mm
17	1.406	35.71	.928 .922	23.57 23.42
19	1.516	38.51	1.033 1.027	26.24 26.09

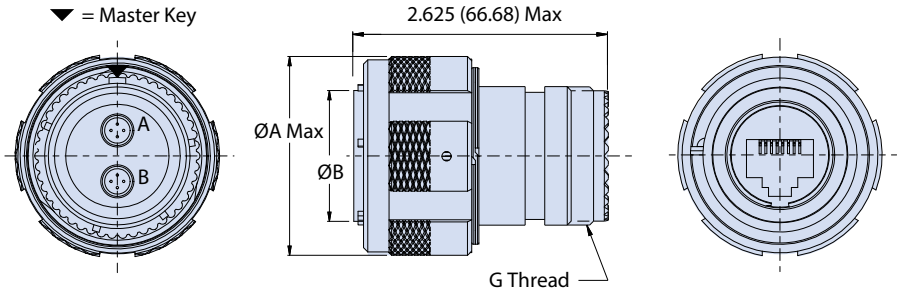

07 - REAR PANEL MOUNT, JAM NUT AND 05 - INLINE RECEPTACLE WITH ACCESSORY THREADS

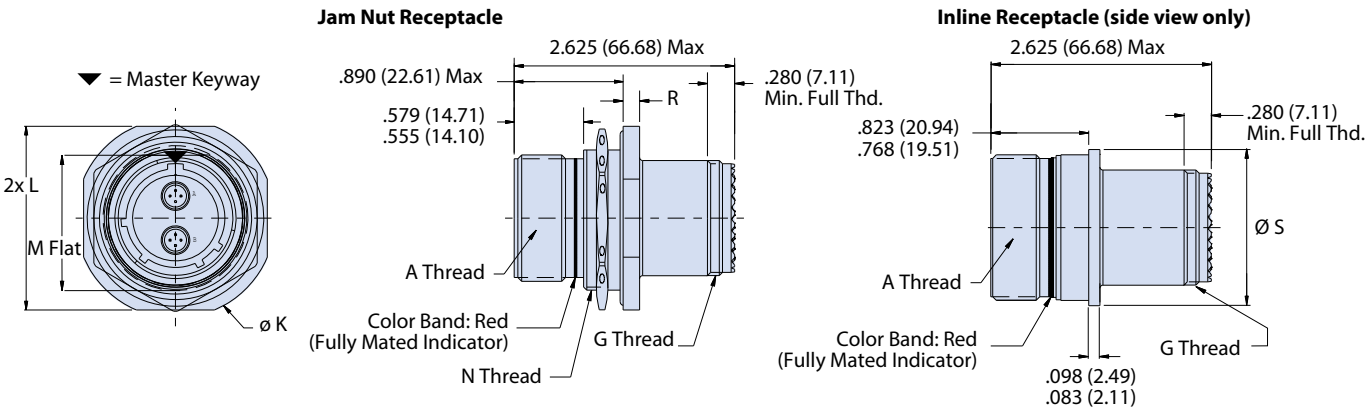

00, DO AND CM - WALL MOUNT RECEPTACLES WITH ACCESSORY THREADS

00 - Wall Mount Receptacle with Slotted Holes (Mating Face)

D0 - Wall Mount Receptacle With Round Holes (Mating Face)

CM - Wall Mount Receptacle With Metric Clinch Nuts (Mating Face)

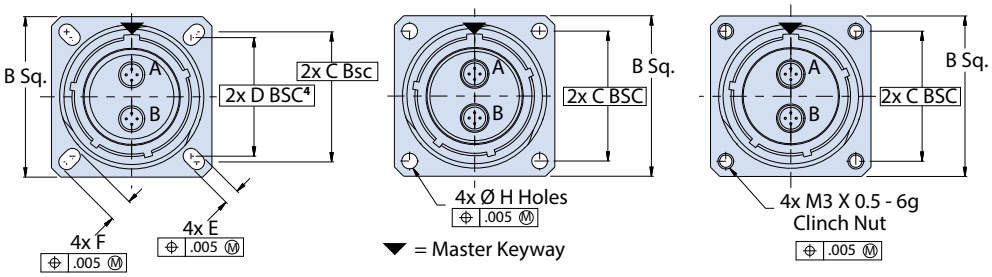

All external dimensions, features, etc. compliant with D38999/20, /24, &/26. Consult factory for additional information.

00 and D0 - Wall Mount Receptacle

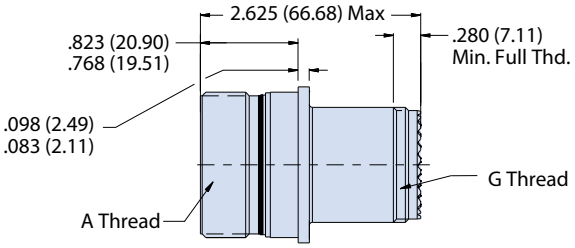

CM - Wall Mount Receptacle

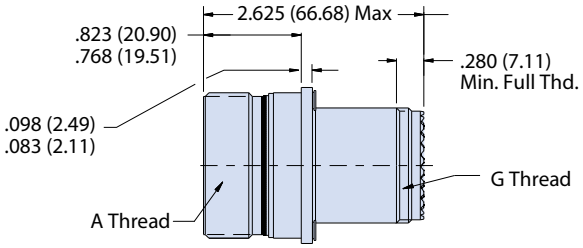

© 2022 Glenair, Inc • 1211 Air Way, Glendale, CA 91201 • 818-247-6000 • www.glenair.com • U.S. CAGE code 06324 • SuperNine Catalog
Dimensions in Inches (millimeters) are subject to change without notice.

ADVANCED PERFORMANCE

SuperNine® RJ45 CAT 5e and 6A

MIL-DTL-38999 Series III Type connectors

233-330 Feedthru receptacle connector



Receptacle front View

Part Number Development							
Sample Part Number	**233-330**	**NF**	**00**	**-17**	**5H**	**N**	**1**
Basic Number	**233-330**						
Finish	See Material and Finish table						
Connector Style[1]	See Connector Style table						
Shell Size	**17** or **19**						
RJ45 Category	**5H** = CAT 5e **6A** = CAT 6A						
Alternate Key Position[1]	Per MIL-DTL-38999 **A**, **B**, **C**, **D**, **E**, **N** = Normal						
RJ45 Orientation	**1**, **2**, **3**, or **4**						

Material and Finish	
NF	Aluminum/Cadmium Olive Drab
ME	Aluminum/Electroless Nickel
MT	Aluminum/Nickel PTFE
ZR	Aluminum/Black Zinc-Nickel

Connector Style[1]	
00	Wall mount receptacle with slotted hole[2]
07	rear panel mount, jam nut receptacle
D0	Wall mount receptacle with round holes
CM	Wall mount receptacle with metric clinch nuts

RJ45 Orientation Options (Receptacle Face)

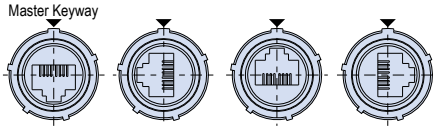

Jam Nut Dimensions								
Shell Size	**Ø K**		**L**		**M Flat**		**R**	
	in	**mm**	**in**	**mm**	**in**	**mm**	**in**	**mm**
17	1.764 1.740	44.81 44.20	1.642 1.610	41.71 40.89	1.191 1.181	30.25 30.00	.122 .083	3.10 2.11
19	1.949 1.925	49.50 48.90	1.827 1.795	46.41 45.59	1.316 1.306	33.43 33.17	.153 .114	3.89 2.90

Wall Mount Receptacle Dimensions												
Shell Size	**B Sq**		**C Bsc**		**D Bsc**[2]		**E**		**F**		**Ø H Holes**	
	In	**mm**	**In**	**mm**	**In**	**mm**	**In**	**mm**	**In**	**mm**	**In**	**mm**
17	1.323 1.299	33.60 32.99	1.062	26.97	.969	24.61	.136 .120	3.45 3.05	.202 .186	5.13 4.72	0.136 0.120	3.45 3.05
19	1.449 1.425	36.80 36.20	1.156	29.36	1.062	26.97						

NOTES

1. See Section A for alternate key/keyway positions and panel cutout dimensions
2. front panel mount only
3. Meets IP67 in unmated condition, IP68 mated
4. Feed-thru receptacle is jack-to-jack configuration

All external dimensions, features, etc. compliant with D38999/20, /24, &/26. Consult factory for additional information.

© 2022 Glenair, Inc • 1211 Air Way, Glendale, CA 91201 • 818-247-6000 • www.glenair.com • U.S. CAGE code 06324 • SuperNine Catalog
Dimensions in Inches (millimeters) are subject to change without notice.

SuperNine® RJ45 CAT 5e and 6A

MIL-DTL-38999 Series III Type conectors

233-330 Feedthru receptacle connector

07 - REAR PANEL MOUNT, JAM NUT FEED-THRU RECEPTACLE

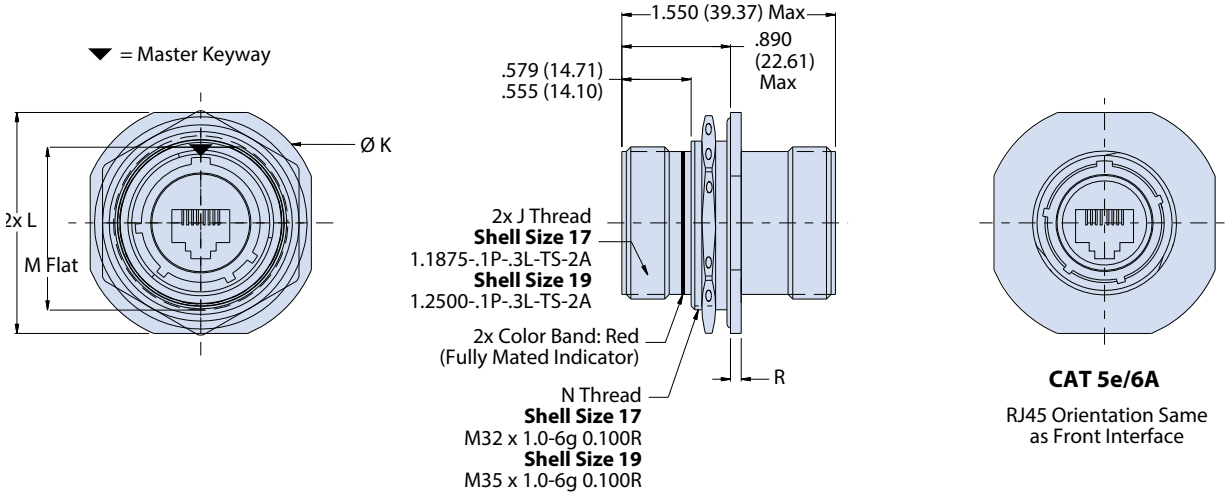

00, DO AND CM - WALL MOUNT FEED-THRU RECEPTACLES

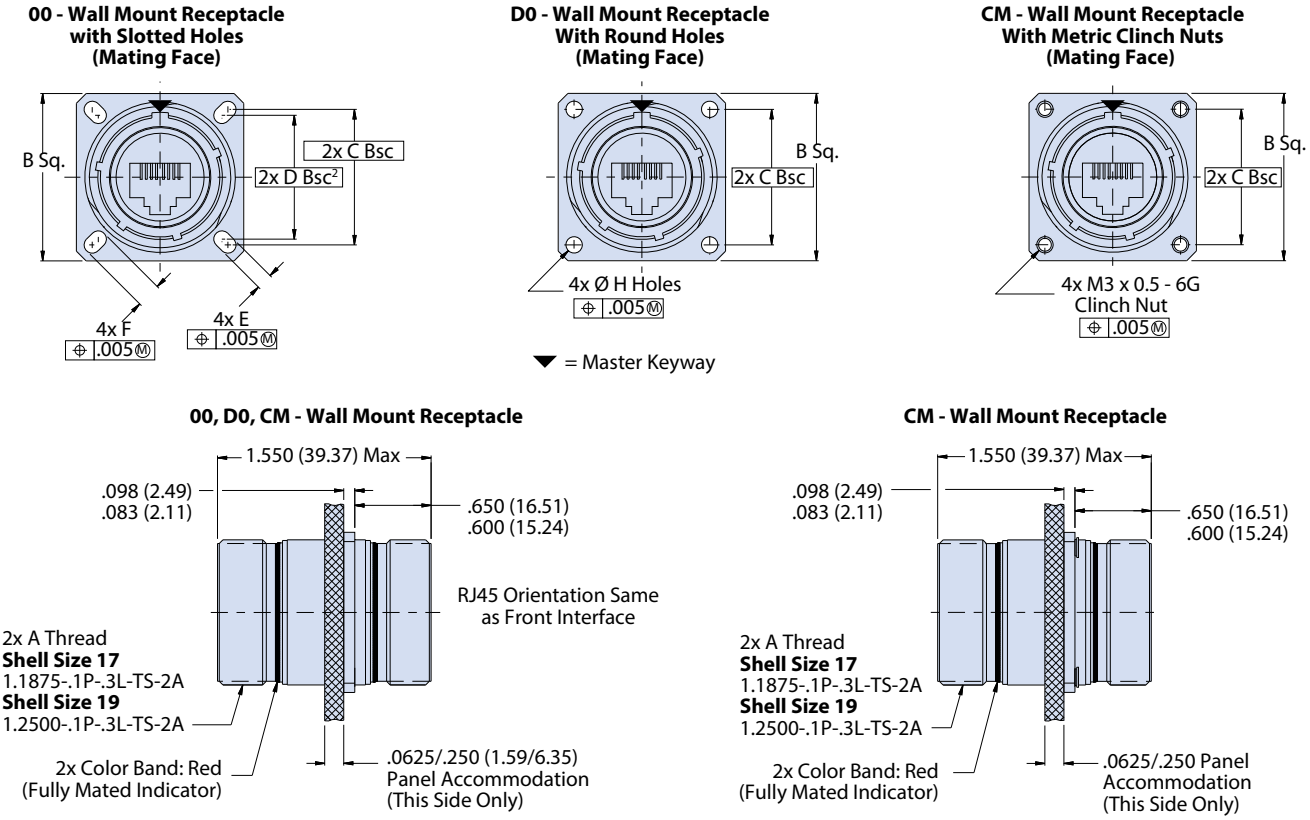

© 2022 Glenair, Inc • 1211 Air Way, Glendale, CA 91201 • 818-247-6000 • www.glenair.com • U.S. CAGE code 06324 • SuperNine Catalog
Dimensions in Inches (millimeters) are subject to change without notice.

ADVANCED PERFORMANCE

SuperNine® RJ45 CAT 5e

MIL-DTL-38999 Series III Type

CAT 5e cable assemblies



2330-0003 Glenair SuperNine RJ45 CAT 5e cable jumpers, SuperSeal to standard RJ45

SuperSeal RJ45 connectors are IP67 open face rated and IP68 in the mated condition for complete protection in harsh environments. SuperSeal connector styles include plug, wall mount and jam-nut receptacles. Wall mount receptacles are available with slotted holes, round holes and metric clinch nuts. All SuperSeal shells offer inline shielding and receptacle shells offer optional shell grounding. Any shell can be ordered with straight or right angle cable exit. RJ45 jack can be ordered in 1 of 4 available orientations to provide further security against mis-mating and accommodate existing RJ45 orientations. RJ45 connector end may be ordered as plug, jack or with flying leads in straight or right angle configurations. Maximum overall length is 100 feet. Consult factory for ordering information.

AVAILABLE INTERFACE OPTIONS



Plug



Wall mount receptacle with metric clinch nuts



Wall Mount Receptacle with round holes



Wall Mount Receptacle with round holes



Jam-nut mount Receptacle





CAT 5E PLUG OPTIONS



CAT 5e, Straight



CAT 5e, 45°,

RJ45 ORIENTATION OPTIONS

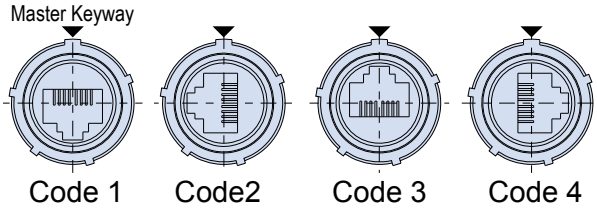

© 2022 Glenair, Inc • 1211 Air Way, Glendale, CA 91201 • 818-247-6000 • www.glenair.com • U.S. CAGE code 06324 • SuperNine Catalog
Dimensions in Inches (millimeters) are subject to change without notice.



MIL-DTL-38999 TYPE
TVS FIELD-READY
RJ45 ETHERNET

RJ45/USB SUPER SEAL™

FILTER EMI/EMP CONNECTORS

SUPERSEAL™

Transient Voltage Suppression (TVS) RJ45 Connectors

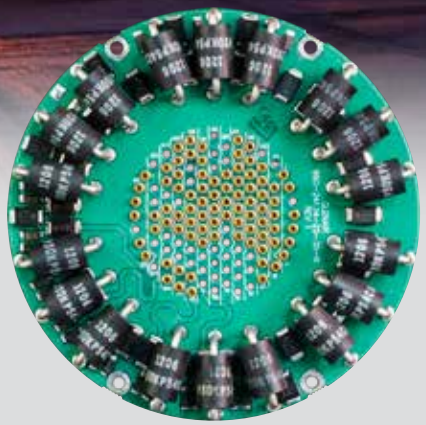

Transient Voltage Suppression (TVS) technologies are designed to shunt voltage transients directly to ground before such surges can damage sensitive electronic equipment. Individual TVS diodes as well as diode modules are incorporated directly into the TVS filter connector package to provide optimal protection for either individual contacts or groups of contacts without significant increases in connector size or weight. RTCA DO-160 and other electrical performance standards define acceptable benchmarks for withstanding electromagnetic pulse, lightning strike, or other induced voltage surges in high-reliability systems. For high-speed signals, care must be taken in selecting diodes to minimize capacitance loading effects which can lead to signal loss. Glenair SuperSeal™ TVS-equipped RJ45 connectors have been engineered to transmit high-speed signals while providing indirect lightning strike protection in accordance with the RTCA DO-160 standard.

Prevents Catastrophic EMP Failure in Military and Commercial Aircraft

- **Electromagnetic pulse (EMP) protection**
- **Lightning protection**
- **Saves weight and space**
- **Superior performance**
- **D38999 Series III type**
- **SuperSeal™ signature sealing and grounding**





MIL-DTL-38999 type Series III SuperNine RJ45 receptacles with transient voltage suppression technoloy

© 2022 Glenair, Inc • 1211 Air Way, Glendale, CA 91201 • 818-247-6000 • www.glenair.com • U.S. CAGE code 06324 • SuperNine Catalog
Dimensions in Inches (millimeters) are subject to change without notice.

SuperNine® RJ45 CAT 5e, TVS

MIL-DTL-38999 Series III Type connectors

TVS diode performance specifications and power selection

MIL-DTL-38999 Series III, TVS Diode, RJ45 CAT 5e and 6A Performance Specifications	
Material and Finish	
Shell/coupling Plating	Complete list of options available in the Material and Finish Options portion of this section
Contacts	PC tails or solder cup: copper alloy, gold plated
RJ45 coupler housing	UL94V-0 compliant ABS or PPS
Seals	Fluorosilicone
Shell Sizes	17 and 19
Environmental / Mechanical Performance	
Sealing	IP68 mated condition, IP67 unmated condition
Outgassing	Mod Code 186S* Mod Code 928**
Operating Temperature	-20°C to +85°C
Vibration	20g's, 3 Axis, 10 - 2000Hz
Mechanical Shock	300 g's
Backshell Interface	MIL-DTL-38999 Designator H
Mating Cycles	500
RJ45 Cat 6A & 5e Electrical Specifications	

* Meets outgassing requirements per ASTM E 595 and meets NASA screening requirements for level 1 highest reliability
** Meets outgassing requirements per UL 94 V-0

MIL-DTL-38999 Series III, TVS Diode, RJ45 CAT 5e and 6A Performance Specifications	
Voltage Rating	1000 Volts, Cat 5e
Data Rate	10BASE-T, 100BASE-TX, 1000BASE-T/1000BASE-TX
Current Rating	1.5 Amps, Cat 5e
D.W.V.	1000 VDC (700 VAC)
Frequency	100 MHz, Cat 5e
Wiring	Straight through
Cabling Length	100 Meters Max
Shield Continuity	Continuous Through Coupler and Grounded to the Shell
TVS Electrical Specifications Each signal line has TVS diode protection per the electrical schematic in figure 1.	

FIGURE 1

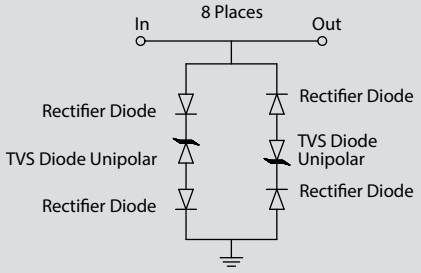

RTCA DO-160 Indirect Lightning Waveset A Waveforms		
RTCA DO-160 Waveform	**Level**	**Open Circuit Voltage/ Short Circuit Voltage V/A**
Waveform 3	1	100/4
	2	250/10
Waveform 4	1	50/10
	2	125/25

MIL-DTL-38999 Series III, TVS Diode, RJ45 CAT 5e and 6A Performance Specifications	
Peak pulse power (tp = 8/20us)	600w
Rated standoff voltage	2.8V
Minimum breakdown voltage	3.0V @ 1mA
Max clamping voltage (@ Ipp = 2A)	5.5V
Max clamping voltage (@ Ipp = 5A)	8.5V
Max clamping voltage (@ Ipp = 30A)	21.0V
Max leakage current	2.0uA max @ 2.8V
Typical junction capacitance	10pF @ 0v, 1Mhz
Polarity	bipolar
Compatible with IEC 61000-4-2 (ESD)	air - 15kv, contact - 8kv
Compatible with IEC 61000-4-4 (EFT)	40A - 5/50ns
Compatible with IEC 61000-4-5 (surge)	24A, 8/20us - level 2 (line-gnd) & level 3 (line-line)
Meets indirect lightning strike requirements per D0-160, section 222 pin injection waveform set A2.	

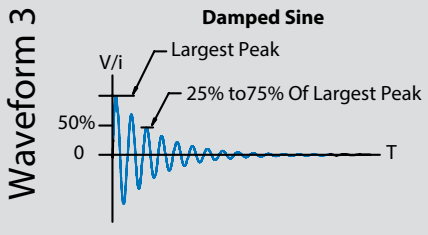

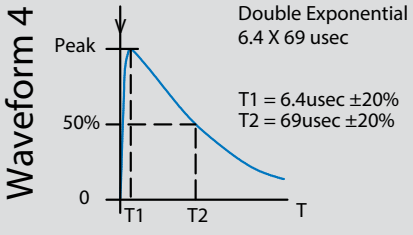

© 2022 Glenair, Inc • 1211 Air Way, Glendale, CA 91201 • 818-247-6000 • www.glenair.com • U.S. CAGE code 06324 • SuperNine Catalog
Dimensions in Inches (millimeters) are subject to change without notice.

SuperNine® RJ45 CAT 5e, TVS

MIL-DTL-38999 Series III Type connectors

244-001 Jam-nut receptacle, PC tail or solder cup



Receptacle Front View



Receptacle Rear View

Material and Finish	
NF	Aluminum/Cadmium Olive Drab
ME	Aluminum/Electroless Nickel
MT	Aluminum/Nickel PTFE
ZR	Aluminum/Black Zinc-Nickel

Part Number Development							
Sample Part Number	**244-001**	**NF**	**19**	**P**	**G**	**N**	**1**
Basic Number	**244-001** with stand-offs						
Finish	See Material and Finish Table						
Shell Size	**17** or **19**						
Termination	**P** = PC tail **S** = Solder cup						
Insert-to-Shell Grounding	**G** = Shielded and grounded to shell						
Alternate Key Position[1]	Per MIL-DTL-38999 **A**, **B**, **C**, **D**, **E**, **N** = Normal[2]						
RJ45 Orientation	**1**, **2**, **3**, or **4**						

NOTES

1. See Section A for alternate key/keyway positions and panel cutout dimensions
2. See page E-26 for diode values

All external dimensions, features, etc. compliant with D38999/20, /24, &/26. Consult factory for additional information.

RJ45 ORIENTATION CODE AND PCB LAYOUT (PCB LAYOUT FOR PC TAIL VERSION)

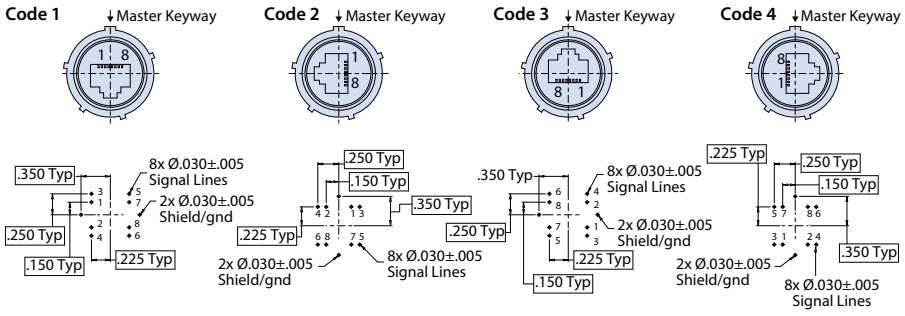

Component Mounting Side

Jam Nut Dimensions												
Shell Size	A Thread	B Thread	C		D Sq.		Ø E		Ø F		G Flat	
			in	mm	in	mm	in	mm	in	mm	in	mm
17	1.1875-.1P-.3L-TS-2A	M32 x 1.0-6g 0.100R	.122 .083	3.10 2.11	1.642 1.610	41.71 40.89	1.764 1.740	44.81 44.20	1.270 1.260	32.56 32.00	1.210 1.200	30.73 30.48
19	1.2500-.1P-.3L-TS-2A	M35 x 1.0-6g 0.100R	.154 .114	3.91 2.90	1.827 1.795	46.41 45.59	1.949 1.925	49.50 48.90	1.395 1.385	35.43 35.18	1.335 1.325	33.91 33.66

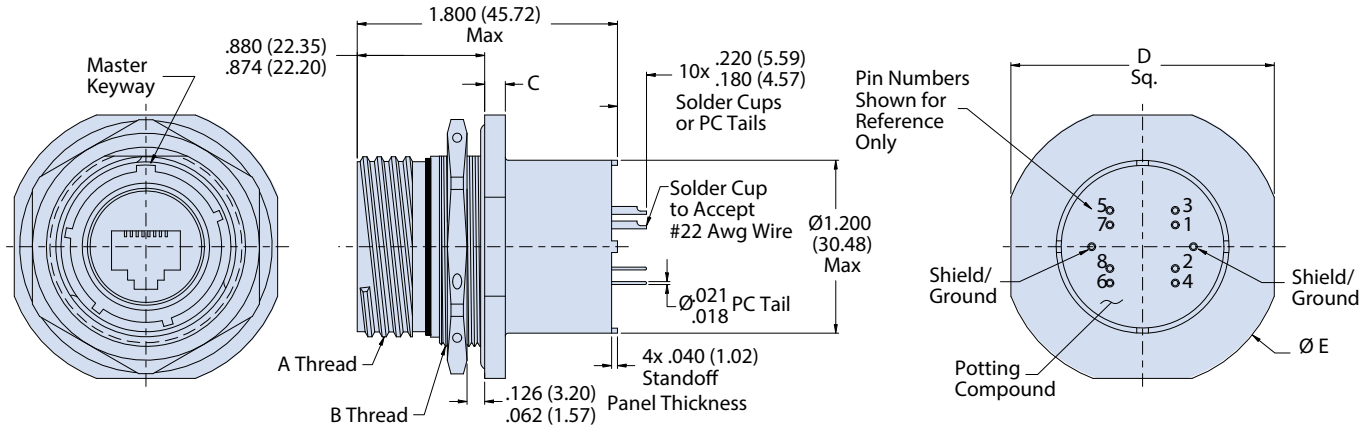

© 2022 Glenair, Inc • 1211 Air Way, Glendale, CA 91201 • 818-247-6000 • www.glenair.com • U.S. CAGE code 06324 • SuperNine Catalog
Dimensions in Inches (millimeters) are subject to change without notice.

ADVANCED PERFORMANCE

SuperNine® RJ45 CAT 5e, TVS

MIL-DTL-38999 Series III Type connectors

244-002 Wall mount receptacle with PC tails or solder cups



Material and Finish[1]	
NF	Aluminum/Cadmium Olive Drab
ME	Aluminum/Electroless Nickel
MT	Aluminum/Nickel PTFE
ZR	Aluminum/Black Zinc-Nickel

Part Number Development							
Sample Part Number	**244-002**	**NF**	**19**	**P**	**G**	**N**	**1**
Basic Number	**244-002** with stand-offs						
Finish	See Material and Finish Table						
Shell Size	**17** or **19**						
Termination	**P** = PC tail **S** = Solder cup						
Insert-to-Shell Grounding	**G** = Shielded and grounded to shell						
Alternate Key Position[1]	Per MIL-DTL-38999 **A**, **B**, **C**, **D**, **E**, **N** = Normal						
RJ45 Orientation	**1**, **2**, **3**, or **4**						

NOTES

1. See Section A for alternate key/keyway positions and panel cutout dimensions
2. See page E-26 for diode values

All external dimensions, features, etc. compliant with D38999/20, /24, &/26. Consult factory for additional information.

RJ45 ORIENTATION CODE AND PCB LAYOUT (PCB LAYOUT FOR PC TAIL VERSION)

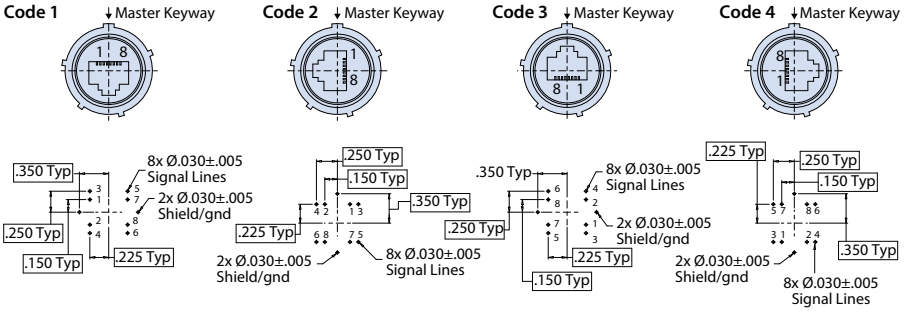

Component Mounting Side

Jam Nut Dimensions									
		B Sq.		C Bsc		Ø D Min.		E Bsc	
Shell Size	**A Thread**	**in**	**mm**	**in**	**mm**	**in**	**mm**	**in**	**mm**
17	1.1875-.1P-.3L-TS-2A	1.323 1.299	33.60 32.99	1.062	26.97	1.219	30.96	1.062	26.97
19	1.2500-.1P-.3L-TS-2A	1.449 1.425	36.80 36.195	1.156	29.36	1.297	32.94	1.156	29.36

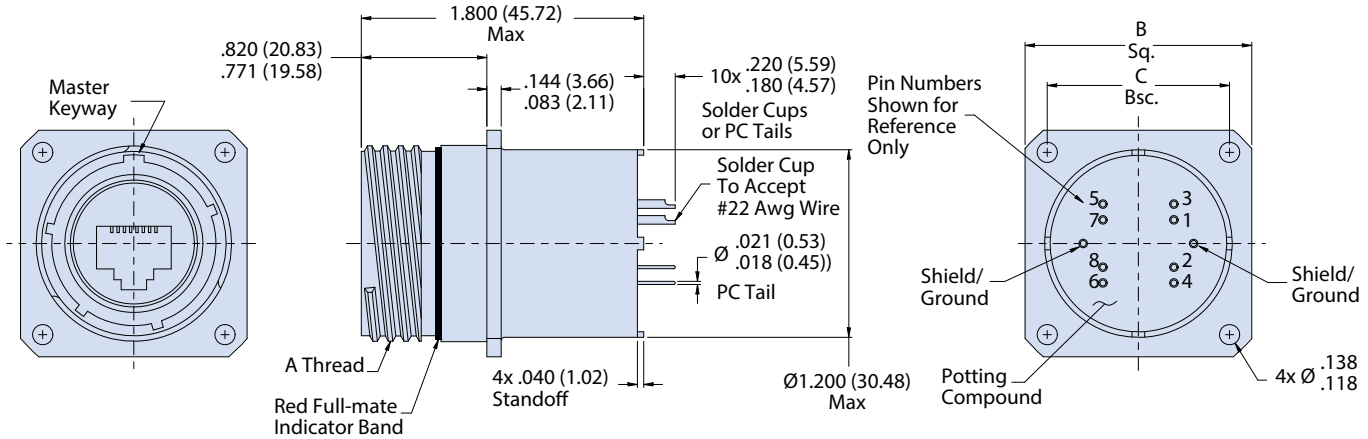

© 2022 Glenair, Inc • 1211 Air Way, Glendale, CA 91201 • 818-247-6000 • www.glenair.com • U.S. CAGE code 06324 • SuperNine Catalog
Dimensions in Inches (millimeters) are subject to change without notice.

SuperNine® RJ45 CAT 5e, TVS

MIL-DTL-38999 Series III Type connectors

244-003 Wall mount receptacle with PC tails or solder cups



Material and Finish	
NF	Aluminum/Cadmium Olive Drab
ME	Aluminum/Electroless Nickel
MT	Aluminum/Nickel PTFE
ZR	Aluminum/Black Zinc-Nickel

Part Number Development							
Sample Part Number	**244-003**	**NF**	**19**	**P**	**G**	**N**	**1**
Basic Number	**244-003** with accessory thread						
Finish	See Material and Finish Table						
Shell Size	**17** or **19**						
Termination	**P** = PC tail **S** = Solder cup						
Insert-to-Shell Grounding	**G** = Shielded and grounded to shell						
Alternate Key Position[1]	Per MIL-DTL-38999 **A**, **B**, **C**, **D**, **E**, **N** = Normal						
RJ45 Orientation	**1**, **2**, **3**, or **4**						

NOTES

1. See Section A for alternate key/keyway positions and panel cutout dimensions
2. See page E-26 for diode values

All external dimensions, features, etc. compliant with D38999/20, /24, &/26. Consult factory for additional information.

RJ45 ORIENTATION CODE AND PCB LAYOUT (PCB LAYOUT FOR PC TAIL VERSION)

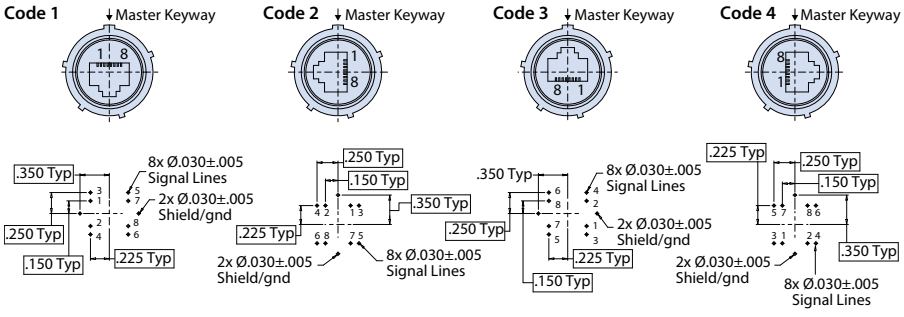

Component Mounting Side

Jam Nut Dimensions												
Shell Size	**A Thread**	**B Thread**	**C**		**D Sq.**		**Ø E**		**Ø F**		**G Flat**	
			in	**mm**	**in**	**mm**	**in**	**mm**				
17	1.1875-.1P-.3L-TS-2A	M32 x 1.0-6g 0.100R	.122 .083	3.10 2.11	1.642 1.610	41.71 40.89	1.764 1.740	44.81 44.17	1.270 1.260	32.26 32.00	1.210 1.200	30.73 30.48
19	1.2500-.1P-.3L-TS-2A	M35 x 1.0-6g 0.100R	.154 .114	3.91 2.90	1.827 1.795	46.41 45.59	1.949 1.925	49.50 48.90	1.395 1.385	35.43 35.18	1.35 1.325	33.91 33.66

JAM-NUT RECEPTACLE WITH ACCESSORY THREADS

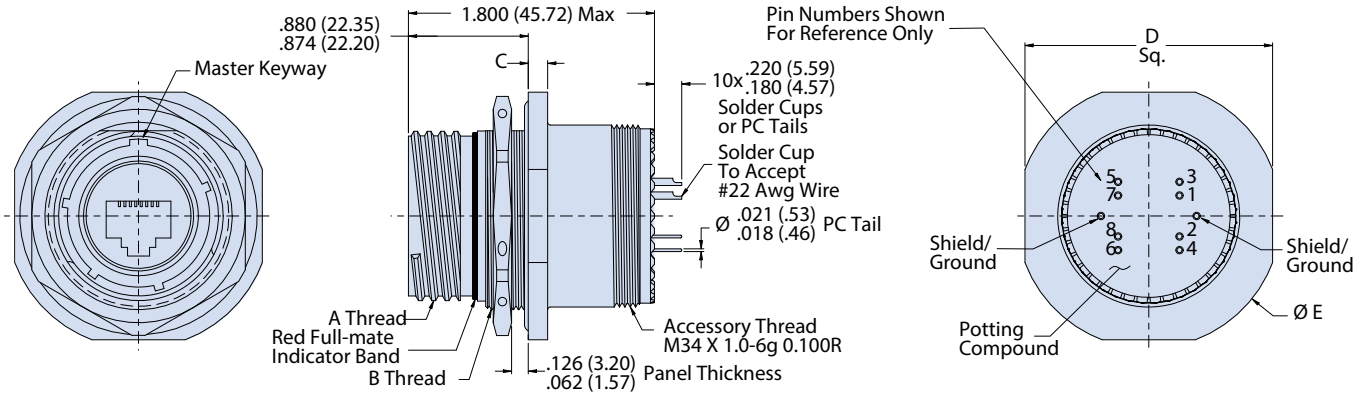

© 2022 Glenair, Inc • 1211 Air Way, Glendale, CA 91201 • 818-247-6000 • www.glenair.com • U.S. CAGE code 06324 • SuperNine Catalog
Dimensions in Inches (millimeters) are subject to change without notice.

ADVANCED PERFORMANCE

SuperNine® RJ45 CAT 5e, TVS

MIL-DTL-38999 Series III Type connectors

244-004 Wall mount receptacle with PC tails or solder cups



Material and Finish	
NF	Aluminum/Cadmium Olive Drab
ME	Aluminum/Electroless Nickel
MT	Aluminum/Nickel PTFE
ZR	Aluminum/Black Zinc-Nickel

Part Number Development							
Sample Part Number	**244-004**	**NF**	**19**	**P**	**G**	**N**	**1**
Basic Number	**244-004** with accessory thread						
Finish	See Material and Finish Table						
Shell Size	**17** or **19**						
Termination	**P** = PC tail **S** = Solder cup						
Insert-to-Shell Grounding	**G** = Shielded and grounded to shell						
Alternate Key Position	Per MIL-DTL-38999 **A**, **B**, **C**, **D**, **E**, **N** = Normal						
RJ45 Orientation	**1**, **2**, **3**, or **4**						

NOTES

1. See Section A for alternate key/keyway positions and panel cutout dimensions
2. See page E-26 for diode values

All external dimensions, features, etc. compliant with D38999/20, /24, &/26. Consult factory for additional information.

RJ45 ORIENTATION CODE AND PCB LAYOUT (PCB LAYOUT FOR PC TAIL VERSION)

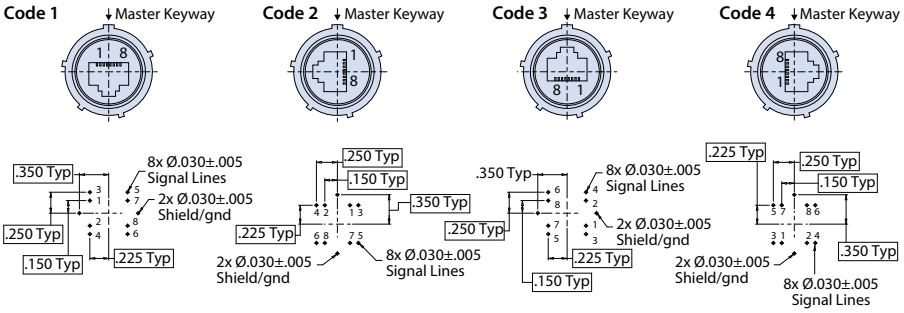

Component Mounting Side

Jam Nut Dimensions									
		B Sq.		C Bsc		Ø D Min		E Bsc	
Shell Size	**A Thread**	**in**	**mm**	**in**	**mm**	**in**	**mm**	**in**	**mm**
17	1.1875-.1P-.3L-TS-2A	1.323 1.299	33.60 32.99	1.062	26.97	1.219	30.96	1.062	26.97
19	1.2500-.1P-.3L-TS-2A	1.449 1.425	36.80 36.195	1.156	29.36	1.297	32.94	1.156	29.36

REAR PANEL MOUNT RECEPTACLE WITH ACCESSORY THREADS

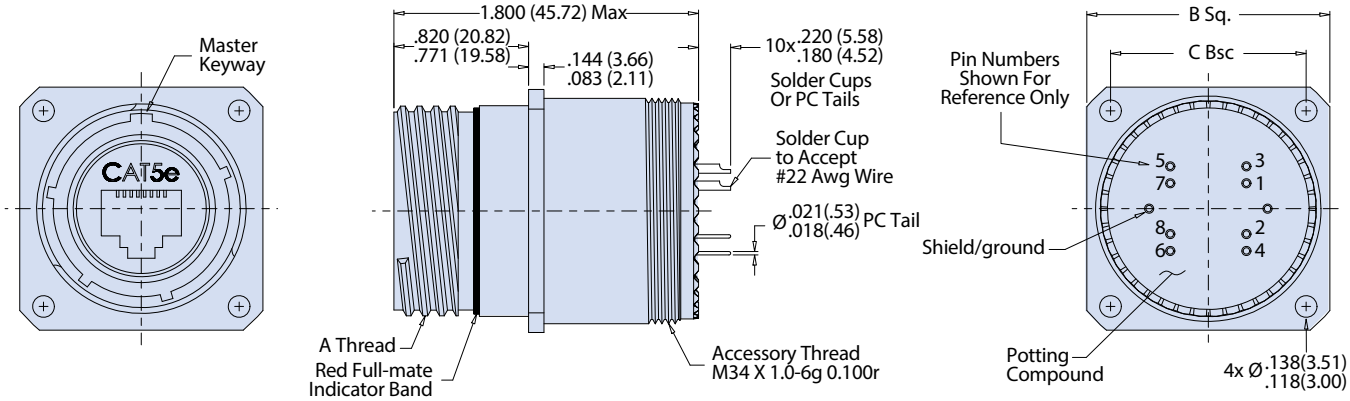

© 2022 Glenair, Inc • 1211 Air Way, Glendale, CA 91201 • 818-247-6000 • www.glenair.com • U.S. CAGE code 06324 • SuperNine Catalog
Dimensions in Inches (millimeters) are subject to change without notice.

SuperNine® USB 2.0/3.0 type A

MIL-DTL-38999 Series III Type connectors

SuperSeal™ Product Selection Guide



233-340 E-34

SuperSeal™ Coupler with Accessory Threads and USB 2.0 Male-to-Female (Plug) or Female-to-Female Receptacle



233-342 E-36

SuperSeal Receptacle with USB 2.0 Female Interface to PC Tail Termination



233-343 E-38

SuperSeal Receptacle with USB 2.0 Female Interface to Solder Cup Termination



233-344 E-40

SuperSeal Receptacle Adapter with Accessory Threads and Pin or Socket Contacts to USB 2.0 Female Interface



233-345 E-42

SuperSeal Connectors with Accessory Threads and USB 2.0 Male (Plug) or Female (Receptacle) Interface to Crimp Removable Contacts



233-370 E-44

SuperSeal Feed-thru Receptacle with USB 2.0 Female-to-Female Interface



233-390 E-46

SuperSeal USB 2.0 Memory Stick



233-392 E-47

SuperSeal USB 3.0 Memory Stick



2330-0015 Cable Assemblies E-48

SuperSeal USB 2.0 Cable Assemblies



Cable Assemblies E-50

SuperSeal USB 3.0 Cable Assemblies

© 2022 Glenair, Inc • 1211 Air Way, Glendale, CA 91201 • 818-247-6000 • www.glenair.com • U.S. CAGE code 06324 • SuperNine Catalog
Dimensions in Inches (millimeters) are subject to change without notice.



SERIES 23

SuperSeal™

USB 2.0 and 3.0 Ruggedized solutions



SuperSeal is the SuperNine family of ruggedized connectors with for USB 2.0 and high-speed USB 3.0 commercial interfaces. Both versions are IP68 (mated) and IP67 (unmated) rated. This interface datalink solution provides outstanding performance for field applications such as dismounted soldier and other C4ISR missions. SuperSeal USB provides military grade connector performance including metal-to-metal grounding, polarization keying, and non-corrosive conductive material and finish options. The USB protocol allows simple plug-and-play connectivity and *hot-swappable* addition of external peripherals such as digitally-aided close air support technologies without restarting systems.

- **USB 2.0 and 3.0 versions available**
- **Superior sealing—IP67 unmated—for complete system protection against water, sand and dust**
- **Highly durable SuperSeal™ insert design, provides enhanced operating temperature, increased life-cycle, and rugged vibration and shock performance**
- **Crimp, solder-cup, PC tail and cable assemblies**

© 2022 Glenair, Inc • 1211 Air Way, Glendale, CA 91201 • 818-247-6000 • www.glenair.com • U.S. CAGE code 06324 • SuperNine Catalog
Dimensions in Inches (millimeters) are subject to change without notice.

SuperNine® USB 2.0/3.0
MIL-DTL-38999 Series III Type connectors
Performance Specifications

USB 2.0 Performance Specifications	
Property	**Description**
Material and Finish	
Shell/Coupling and Plating	Aluminum, cad/o.d., electroless nickel, nickel PTFE, black zinc nickel
Contacts	PC tails, solder cup, and crimp contacts: copper alloy, gold plated
USB Insulator	LCP
Grommet, Peripheral Seal, Interfacial Seal, O-ring	Blended fluorosilicone/silicone elastomer, 30% silicone per ZZ-R-765, 70% fluorosilicone per MIL-R-25988
Shell Sizes	15 Consult factory for other shell size options
Electrical Specifications	
Data Rate	480 MBps
Power Usage	500 milliamps (mA)
Current Rating	1.5 Amps,
D.W.V.	500 VAC
I.R.	1000 MegOhms
Cabling Length	5.0 Meters Max
Shielding	Continuous through coupler or continuous coupler to shell
Environmental/Mechanical Performance	
Sealing	IP68 mated condition, IP67 unmated condition
Outgassing	**Mod Code 186S** meets outgassing requirements per ASTM E 595 and meets NASA level 3 screening for standard reliability **Mod Code 928** meets outgassing requirements per UL 94 V-0
Operating Temperature	-40°C to +120°C
Vibration	20g's, 3 Axis, 10 - 2000Hz
Mechanical Shock	300 g's
Backshell Interface	MIL-DTL-38999 Designator H
Mating System	Triple-start stub ACME
Mating Cycles	500

USB 3.0 Performance Specifications	
Property	**Description**
Material and Finish	
Shell/Coupling and Plating	Aluminum, cad/o.d., electroless nickel, nickel PTFE, black zinc nickel
Contacts	PC tails, solder cup, and crimp contacts: copper alloy, gold plated
USB Insulator	LCP
Grommet, Peripheral Seal, Interfacial Seal, O-ring	Blended fluorosilicone/silicone elastomer, 30% silicone per ZZ-R-765, 70% fluorosilicone per MIL-R-25988
Shell Sizes	15 Consult factory for other shell size options
Electrical Specifications	
Data Rate	5.0 GBps
Power Usage	500 milliamps (mA)
Current Rating	1.5 Amps,
D.W.V.	500 VAC
I.R.	1000 MegOhms
Cabling Length	3.0 Meters Max
Shielding	Continuous through coupler or continuous coupler to shell
Environmental/Mechanical Performance	
Sealing	IP68 mated condition, IP67 unmated condition
Outgassing	**Mod Code 186S** meets outgassing requirements per ASTM E 595 and meets NASA level 3 screening for standard reliability **Mod Code 928** meets outgassing requirements per UL 94 V-0
Operating Temperature	-40°C to +120°C
Vibration	20g's, 3 Axis, 10 - 2000Hz
Mechanical Shock	300 g's
Backshell Interface	MIL-DTL-38999 Designator H
Mating System	Triple-start stub ACME
Mating Cycles	500

© 2022 Glenair, Inc • 1211 Air Way, Glendale, CA 91201 • 818-247-6000 • www.glenair.com • U.S. CAGE code 06324 • SuperNine Catalog
Dimensions in Inches (millimeters) are subject to change without notice.

SuperNine® USB 2.0 type A

MIL-DTL-38999 Series III Type connectors

233-340 Couplers with Type A rear USB interface



Plug
Front View



Square Flange
Receptacle
Front View



Jam Nut Receptacle
Front View

Part Number Development										
Sample Part Number	**233-340**	**NF**	**00**	**-15**	**2**	**A**	**A**	**N**	**H**	**T**
Basic Number	**233-340**									
Finish	See Material and Finish table									
Connector Style[1]	See Connector Style table									
Shell Size	**15**									
USB Performance	**2** = USB 2.0									
USB Front Interface	**A** = Type A									
USB Back Interface	**A** = Type A									
Alternate Key Position[1]	**A**, **B**, **C**, **D**, **E**, **N** = Normal per MIL-DTL-38999									
USB Orientation	**H** = Horizontal **V** = Vertical									
Shrink Boot	**T** = Shrink Boot Included (Omit for None)									

USB Receptacle Orientation Options

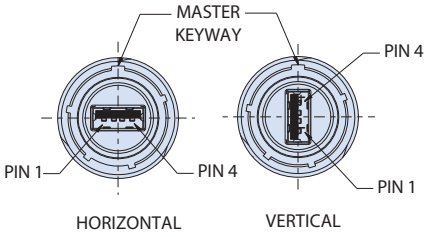

USB Plug Orientation Options

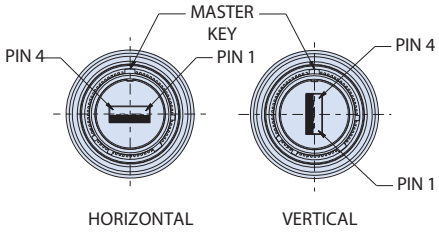

Material and Finish	
NF	Aluminum/Cadmium, Olive Drab
M	Aluminum/Electroless Nickel
MT	Alumimun/Nickel PTFE
ZR	Aluminum/Black Zinc-Nickel

All external dimensions, features, etc. compliant with D38999/20, /24, &/26. Consult factory for additional information.

Connector Style	
G6	Plug
07	Rear panel mount, jam nut receptacle
00	Wall mount receptacle with slotted holes
D0	Wall mount receptacle with round holes
CM	Wall mount receptacle with metric clinch nuts

USB 2.0 Wiring				
Pin	**Name**	**Cable Color (USB)**	**Description**	**Recommended Wire Sizes (AWG)**
1	(V Bus)	Red	+5 V	22
2	(D-)	White	Data -	28
3	(D+)	Green	Data +	28
4	(GND)	Black	Ground	22

G6 - PLUG WITH ACCESSORY THREADS

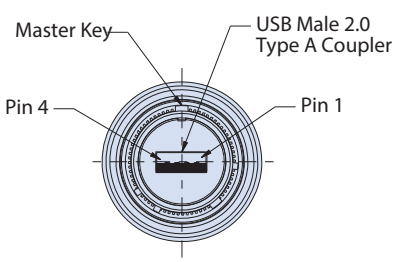

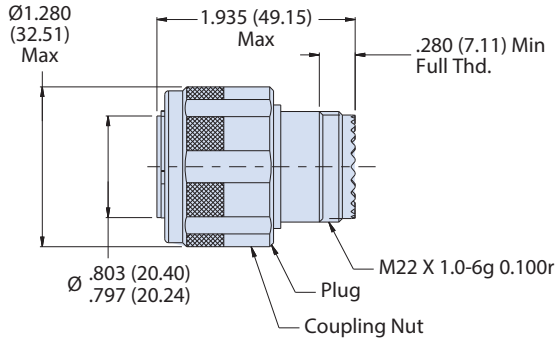

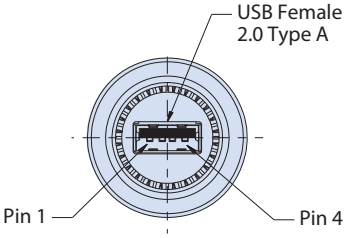

© 2022 Glenair, Inc • 1211 Air Way, Glendale, CA 91201 • 818-247-6000 • www.glenair.com • U.S. CAGE code 06324 • SuperNine Catalog
Dimensions in Inches (millimeters) are subject to change without notice.

SuperNine® USB 2.0 type A

MIL-DTL-38999 Series III Type connectors

233-340 Couplers with Type A rear USB interface

07 - REAR PANEL MOUNT, JAM NUT RECEPTACLE WITH ACCESSORY THREADS

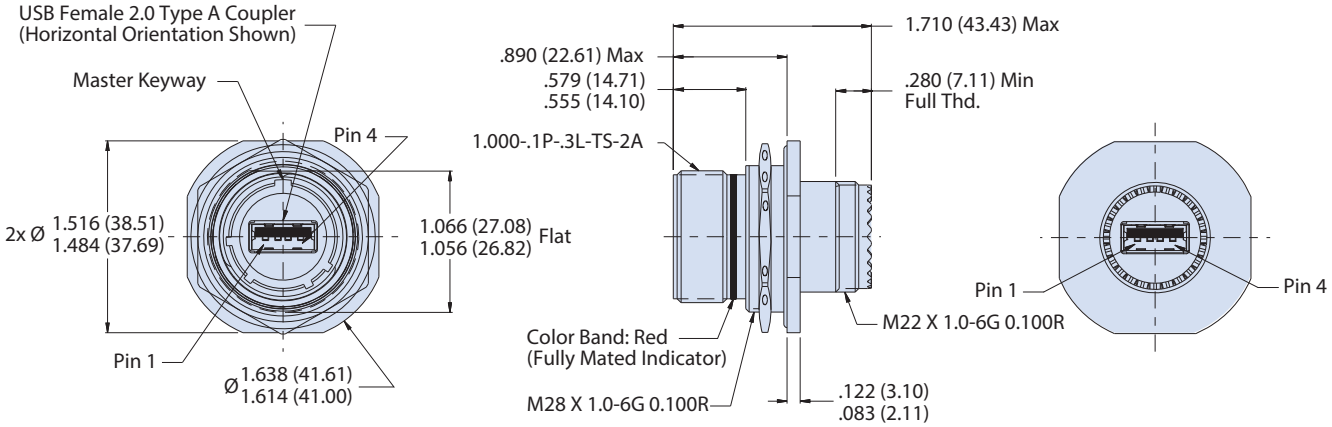

00, DO AND CM - WALL MOUNT RECEPTACLES WITH ACCESSORY THREADS

00 - Slotted Hole Receptacle Face View

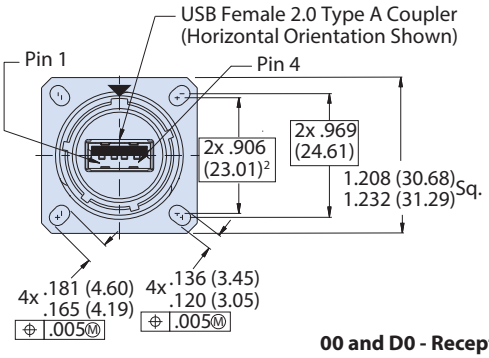

D0 - Round Hole Receptacle Face View

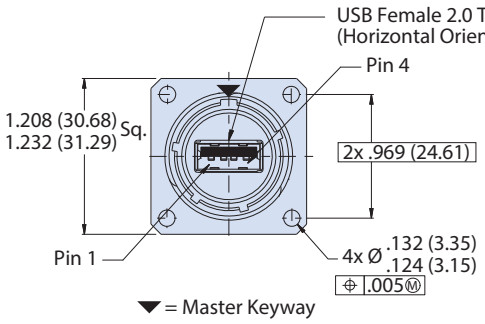

CM - Clinch Hole Receptacle Face View

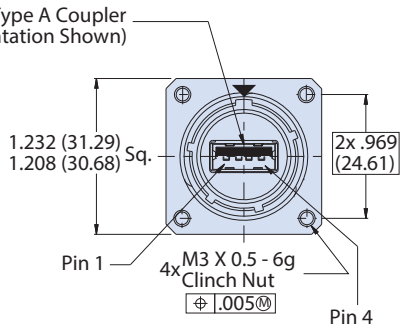

00 and D0 - Receptacle Side View

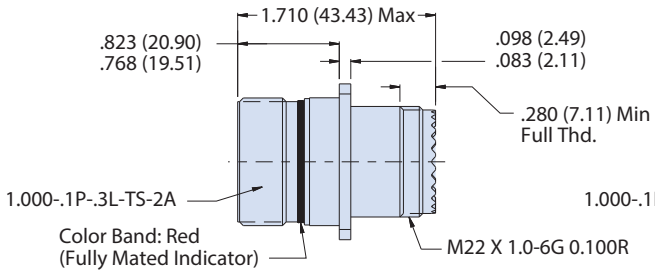

CM - Receptacle Side View

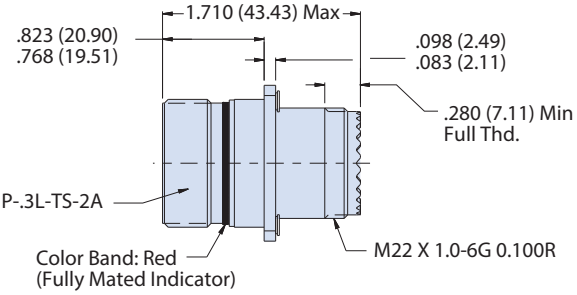

NOTES

1. See Section A for alternate key/keyway positions and panel cutout dimensions
2. Meets IP67 in unmated condition, IP68 mated
3. Receptacle has USB female receptacle, plug has USB male plus
4. Material and Finish
   - Shell, jam nut: al alloy
   - Insulators: high grade rigid dielectric/ n.a.
   - Contacts: copper alloy, gold plated
   - Seals: silicone based elastomer
   - USB (shell/contacts): copper alloy
   - Dielectric: hi-temp thermoplastic PA9T UL94V-0
   - Hardware: stainless steel /passivated

© 2022 Glenair, Inc • 1211 Air Way, Glendale, CA 91201 • 818-247-6000 • www.glenair.com • U.S. CAGE code 06324 • SuperNine Catalog
Dimensions in Inches (millimeters) are subject to change without notice.

SuperNine® USB 2.0 type A

MIL-DTL-38999 Series III Type connectors

233-342 Receptacle with PC tails



Jam Nut Receptacle Rear View



Jam Nut Receptacle Front View

Part Number Development								
Sample Part Number	**233-342**	**NF**	**00**	**-15**	**2**	**A**	**N**	**H**
Basic Number	**233-342**							
Finish	See Material and Finish table							
Connector Style[1]	See Connector Style table							
Shell Size	**15**							
USB Performance	**2** = USB 2.0							
USB Interface Type	**A** = Type A							
Alternate Key Position[1]	**A**, **B**, **C**, **D**, **E**, **N** = Normal; per MIL-DTL-38999							
USB Orientation	**H** = Horizontal **V** = Vertical							

Material and Finish	
NF	Aluminum/Cadmium, Olive Drab
M	Aluminum/Electroless Nickel
MT	Alumimun/Nickel PTFE
ZR	Aluminum/Black Zinc-Nickel

Connector Style	
07	Rear panel mount, jam nut receptacle
00	Wall mount receptacle with slotted holes
D0	Wall mount receptacle with round holes
CM	Wall mount receptacle with metric clinch nuts

USB Receptacle Orientation Options (Partial Views Shown)

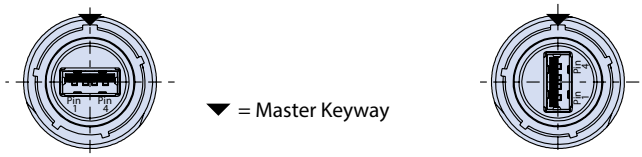

Horizontal Vertical

Recommended (Solder Side)

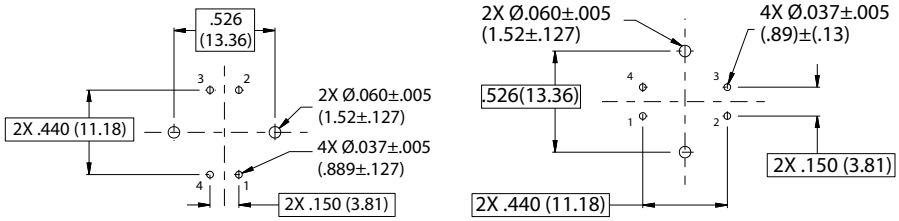

NOTES

1. See Section A for alternate key/keyway positions and panel cutout dimensions
2. Rear panel mount only
3. Meets IP67 in unmated condition, IP68 mated
4. Receptacle has USB female receptacle
5. Material/Finishes:
   - Insulators: high grade rigid dielectric/ n.a.
   - Contacts: copper alloy, gold plated
   - Seals: silicone based elastomer
   - USB (shell/contacts): copper alloy
   - Dielectric: hi-temp thermoplastic PA9T UL94V-0
   - Hardware: stainless steel/passivated

USB 2.0 Wiring				
Pin	Name	Cable Color (USB)	Description	Recommended Wire Sizes (AWG)
1	(V Bus)	Red	+5 V	22
2	(D-)	White	Data -	28
3	(D+)	Green	Data +	28
4	(GND)	Black	Ground	22

All external dimensions, features, etc. compliant with D38999/20, /24, &/26. Consult factory for additional information.

© 2022 Glenair, Inc • 1211 Air Way, Glendale, CA 91201 • 818-247-6000 • www.glenair.com • U.S. CAGE code 06324 • SuperNine Catalog
Dimensions in Inches (millimeters) are subject to change without notice.

SuperNine® USB 2.0 type A

MIL-DTL-38999 Series III Type connectors

233-342 Receptacle with PC tails

07 - REAR PANEL MOUNT, JAM NUT RECEPTACLE

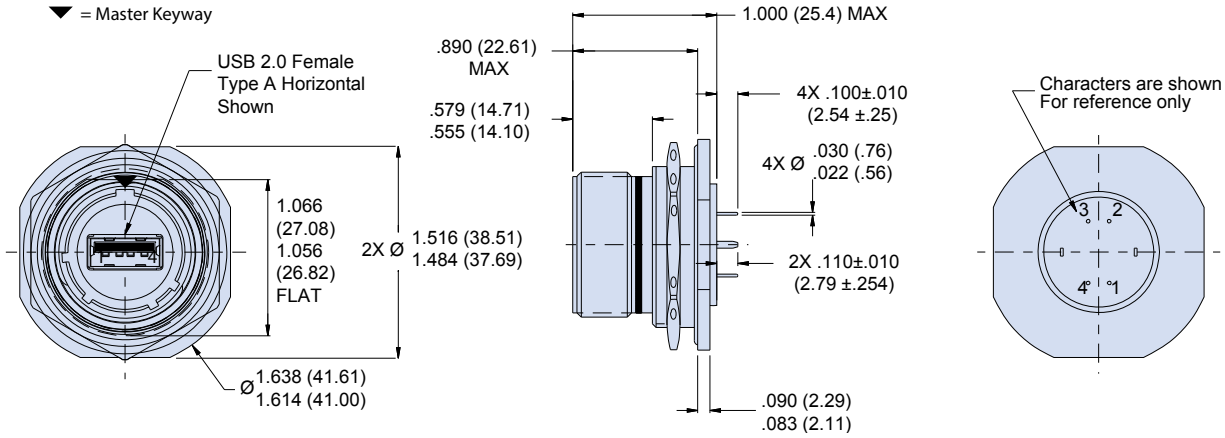

00, DO AND CM - WALL MOUNT RECEPTACLES

00 - Slotted Hole Receptacle Face View

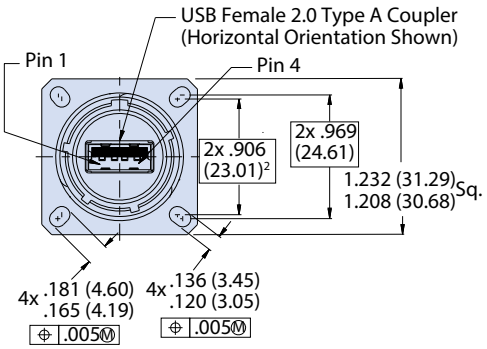

D0 - Round Hole Receptacle Face View

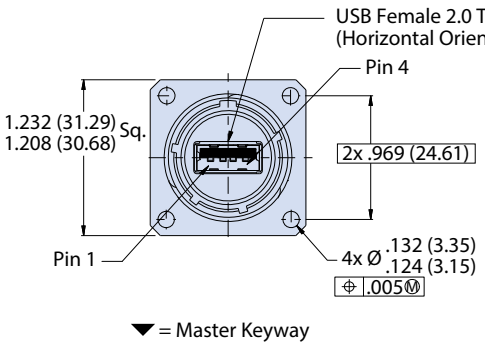

CM - Clinch Hole Receptacle Face View

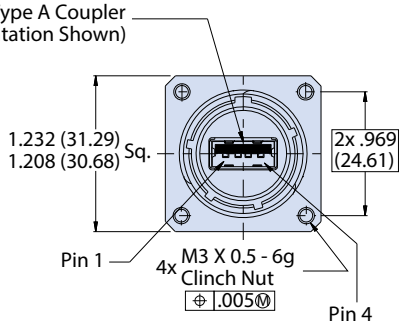

00 and D0 - Receptacle (Side View)

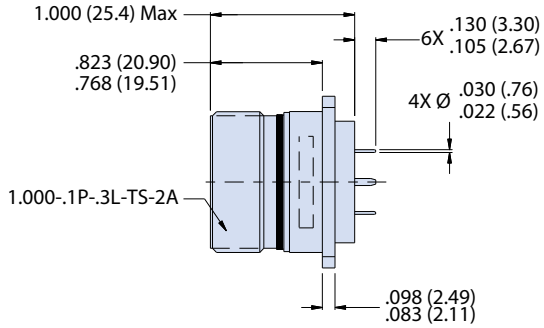

CM - Receptacle (Side View)

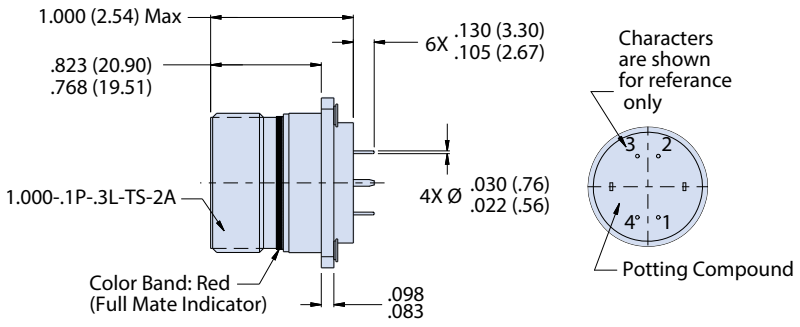

© 2022 Glenair, Inc • 1211 Air Way, Glendale, CA 91201 • 818-247-6000 • www.glenair.com • U.S. CAGE code 06324 • SuperNine Catalog
Dimensions in Inches (millimeters) are subject to change without notice.

SuperNine® USB 2.0 type A

MIL-DTL-38999 Series III Type connectors

233-343 Receptacle with solder cup termination



Jam Nut Receptacle
Front View



Jam Nut Receptacle
Rear View

Part Number Development								
Sample Part Number	**233-343**	**NF**	**00**	**-15**	**2**	**A**	**N**	**H**
Basic Number	**233-343**							
Finish	See Material and Finish table							
Connector Style[1]	See Connector Style table							
Shell Size	**15**							
USB Performance	**2** = USB 2.0							
USB Interface Type	**A** = Type A							
Alternate Key Position[1]	**A**, **B**, **C**, **D**, **E**, **N** = Normal; per MIL-DTL-38999							
USB Orientation	**H** = Horizontal **V** = Vertical							

USB Receptacle Orientation Options (Partial Views Shown)

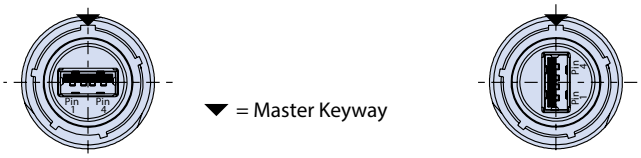

Horizontal Vertical

Material and Finish	
NF	Aluminum/cadmium, olive drab
M	Aluminum/electroless nickel
MT	Alumimun/nickel PTFE
ZR	Aluminum/black zinc-nickel

Connector Style	
07	Rear panel mount, jam nut receptacle
00	Wall mount receptacle with slotted holes
D0	Wall mount receptacle with round holes
CM	Wall mount receptacle with metric clinch nuts

USB 2.0 Wiring				
Pin	Name	Cable Color (USB)	Description	Recommended Wire Sizes (AWG)
1	(V Bus)	Red	+5 V	22
2	(D-)	White	Data -	28
3	(D+)	Green	Data +	28
4	(GND)	Black	Ground	22

All external dimensions, features, etc. compliant with D38999/20, /24, &/26. Consult factory for additional information.

NOTES

1. See Section A for alternate key/keyway positions and panel cutout dimensions
2. Front panel mount only
3. All external dimensions, features, etc. Compliant with D38999/20, /24 & /26. Consult factory for additional information
4. Meets IP67 in unmated condition, IP68 mated
5. Receptacle has USB female receptacle
6. Materials and finishes

- Shell, jam nut: aluminum ally
- insulators: high grade 4 rigid dielectric/n.a.
- contacts: copper alloy, god plated
- seals: silicone based elastomer
- USB (shell/contacts: copper alloy
- dielectric: hi-temp thermoplastic PA9T UL94V-0
- Hardware: stainless steel/passivated

© 2022 Glenair, Inc • 1211 Air Way, Glendale, CA 91201 • 818-247-6000 • www.glenair.com • U.S. CAGE code 06324 • SuperNine Catalog
Dimensions in Inches (millimeters) are subject to change without notice.

SuperNine® USB 2.0 type A

MIL-DTL-38999 Series III Type connectors

233-343 Receptacle with solder cup termination

07 - REAR PANEL MOUNT, JAM NUT RECEPTACLE

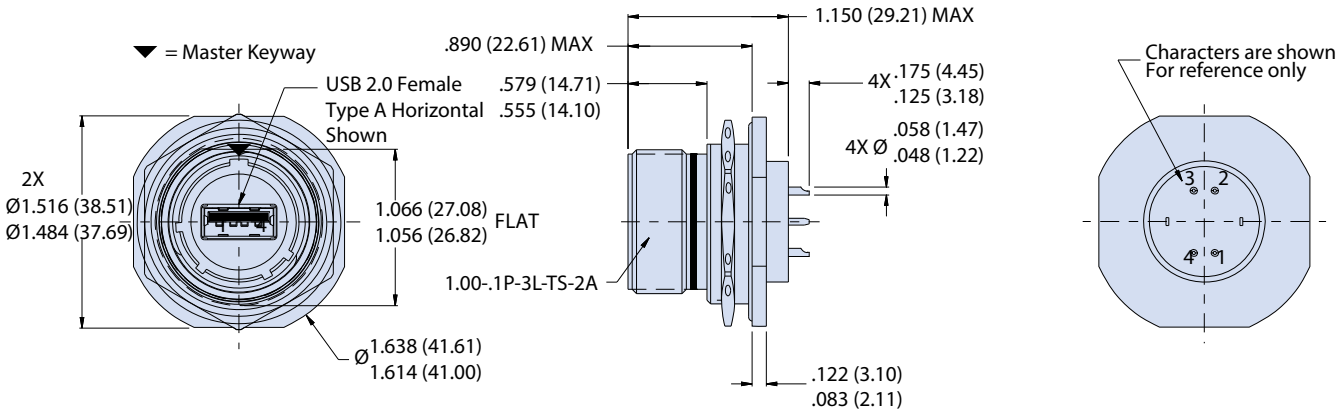

00, DO AND CM - WALL MOUNT RECEPTACLES

00 - Slotted Hole Receptacle Face View

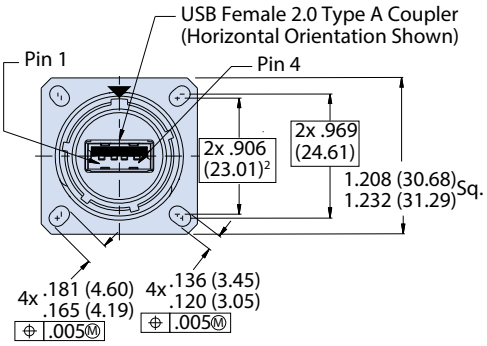

D0 - Round Hole Receptacle Face View

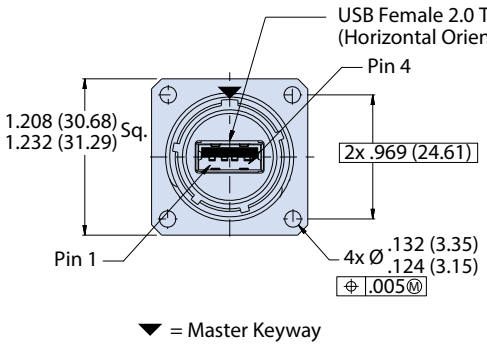

CM - Clinch Hole Receptacle Face View

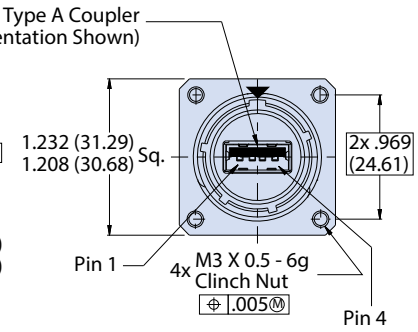

00 and D0 - Receptacle Side View

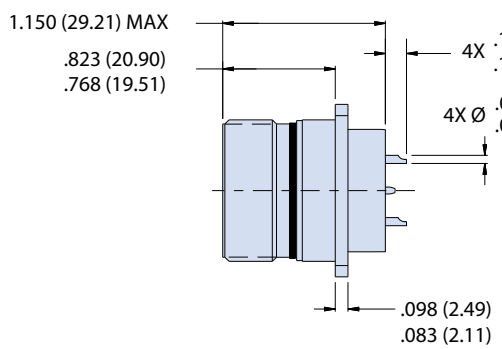

CM - Receptacle Side View

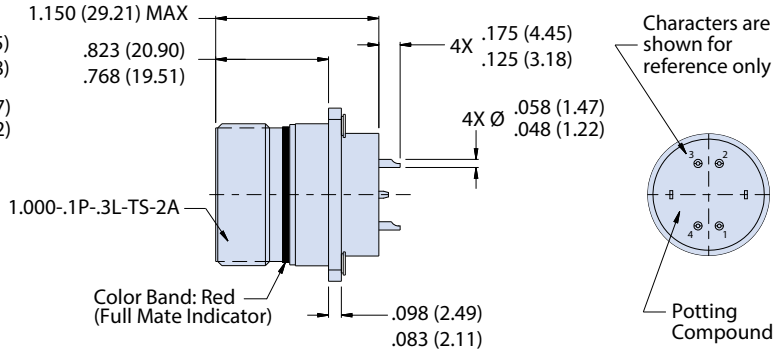

© 2022 Glenair, Inc • 1211 Air Way, Glendale, CA 91201 • 818-247-6000 • www.glenair.com • U.S. CAGE code 06324 • SuperNine Catalog
Dimensions in Inches (millimeters) are subject to change without notice.

ADVANCED PERFORMANCE

SuperNine® USB 2.0 type A

MIL-DTL-38999 Series III Type connectors

233-344 Receptacle adapter with MIL-STD 1560 interface



Plug
Front View



Receptacle
Front View

Material and Finish	
NF	Aluminum/cadmium, olive drab
M	Aluminum/electroless nickel
MT	Alumimun/nickel PTFE
ZR	Aluminum/black zinc-nickel

Connector Style	
G6	Plug
07	Rear panel mount, jam nut receptacle
00	Wall mount receptacle with slotted holes[2]
D0	Wall mount receptacle with round holes
CM	Wall mount receptacle with metric clinch nuts

NOTES

1. See Section A for alternate key/ keyway positions and panel cutout dimensions
2. Front panel mount only
3. Insert arrangement in accordance with MIL-STD-1560, 15-35. Contact factory for additional options
4. Meets IP67 in unmated condition, IP68 mated
5. For custom pin assignment consult factory
6. Both plug and receptacle shells have MIL-STD-1560 mating interface and rear USB female receptacles

Part Number Development										
Sample Part Number	**233-344**	**NF**	**00**	**15**	**-35**	**2**	**A**	**P**	**N**	**T**
Basic Number	**233-344**									
Finish	See Material and Finish table									
Connector Style[1]	See Connector Style table									
Shell Size	**15**									
Insert Arrangement[4]	**35** = IAW MIL-STD-1560, 15-35									
USB Performance	**2** = USB 2.0									
USB Rear Interface	**A** = Type A									
Contact Style	**P** = Pin **S** = Socket									
Alternate Polarization[1]	**A, B, C, D, E, N** = Normal; per MIL-DTL-38999									
Shrink Boot	**T** = Shrink Boot; Omit for none									

USB 2.0 Wiring Diagram

P1 (connector interface)
Only 4 pins needed)

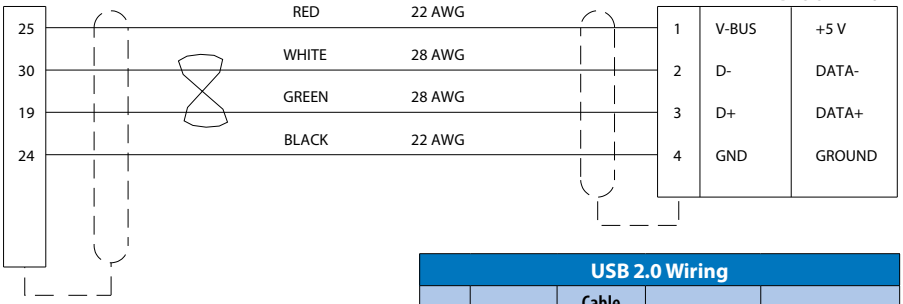

P2 (USB 2.0 FEMALE)

PIN	NAME	DESCRIPTION
1	V-BUS	+5 V
2	D-	DATA-
3	D+	DATA+
4	GND	GROUND

All external dimensions, features, etc. compliant with D38999/20, /24, &/26. Consult factory for additional information.

USB 2.0 Wiring				
Pin	Name	Cable Color (USB)	Description	Recommended Wire Sizes (AWG)
1	(V Bus)	Red	+5 V	22
2	(D-)	White	Data -	28
3	(D+)	Green	Data +	28
4	(GND)	Black	Ground	22

G6 PLUG WITH ACCESSORY THREADS

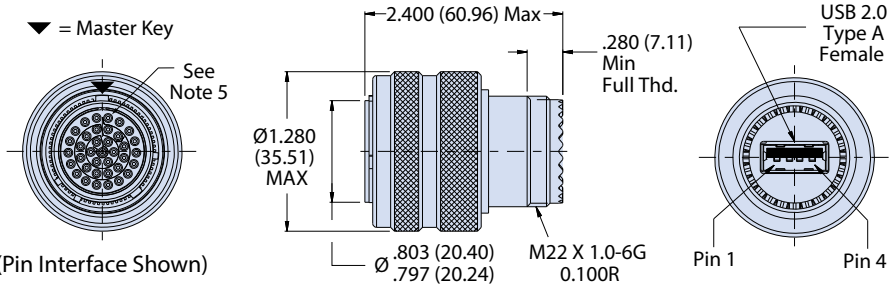

© 2022 Glenair, Inc • 1211 Air Way, Glendale, CA 91201 • 818-247-6000 • www.glenair.com • U.S. CAGE code 06324 • SuperNine Catalog
Dimensions in Inches (millimeters) are subject to change without notice.

SuperNine® USB 2.0 type A

MIL-DTL-38999 Series III Type connectors

233-344 Receptacle adapter with MIL-STD 1560 interface

07 - REAR PANEL MOUNT, JAM NUT RECEPTACLE WITH ACCESSORY THREADS

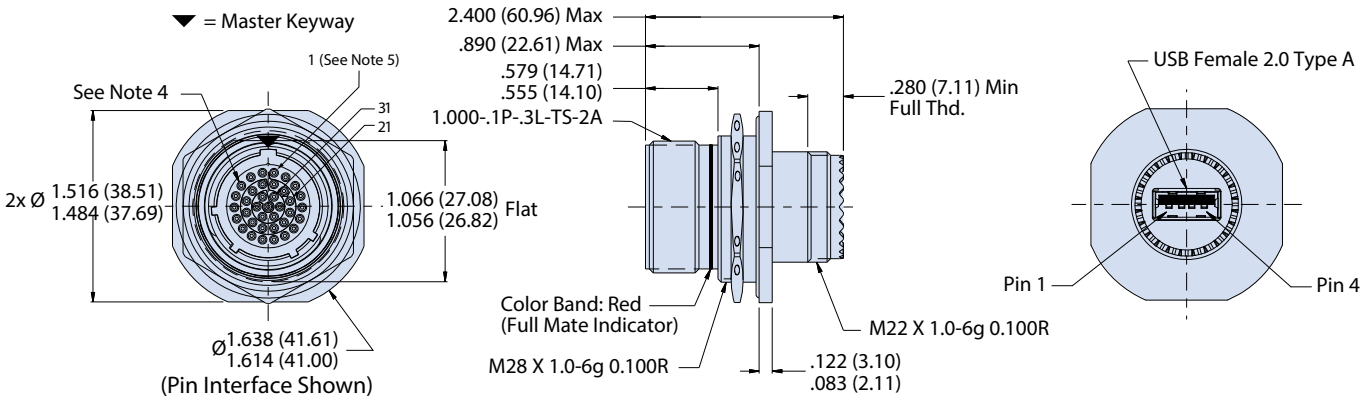

00, DO AND CM - WALL MOUNT RECEPTACLES WITH ACCESSORY THREADS

00 - Slotted Hole Receptacle (Mating Face)

(Pin Interface Shown)

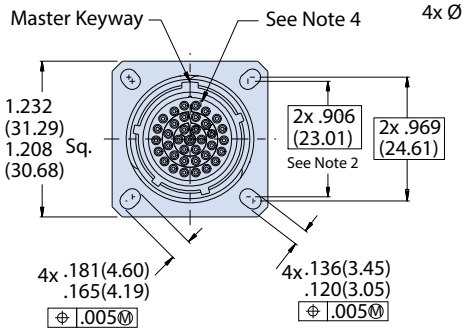

D0 - Round Hole Receptacle (Mating Face)

(Pin Interface Shown)

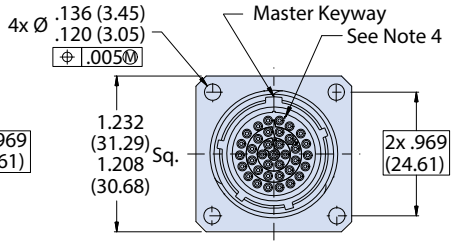

CM - Clinch Hole Receptacle (Mating Face)

(Pin Interface Shown)

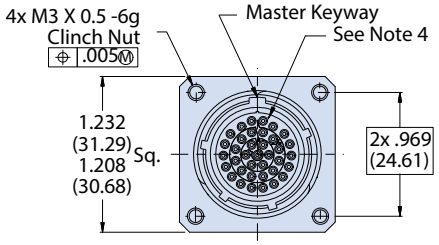

00 and D0 - Receptacle (Side View)

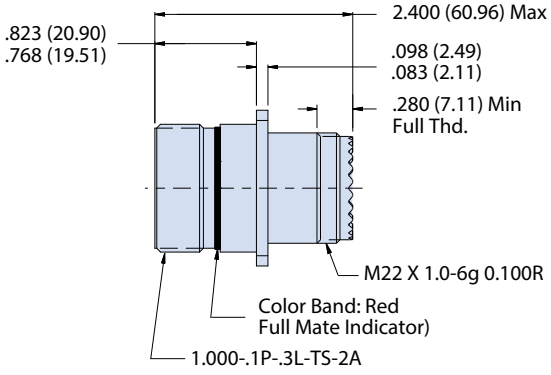

CM - Receptacle (Side View)

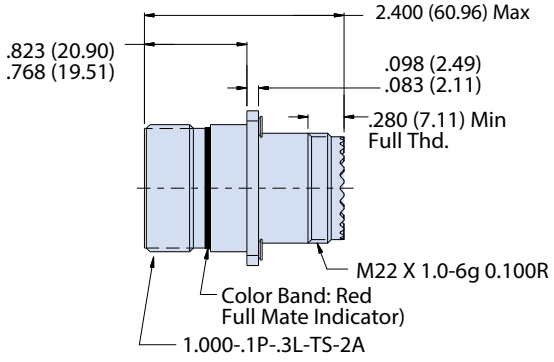

Rear View

USB 2.0
Female Type A
Pin locations
the same for all
wall mount
receptacles

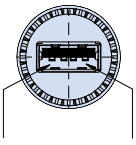

© 2022 Glenair, Inc • 1211 Air Way, Glendale, CA 91201 • 818-247-6000 • www.glenair.com • U.S. CAGE code 06324 • SuperNine Catalog
Dimensions in Inches (millimeters) are subject to change without notice.

SuperNine® USB 2.0 type A

MIL-DTL-38999 Series III Type connectors

233-345 Receptacle with size 22 crimp removeable contacts



Receptacle
Front View



Receptacle
Rear View

Part Number Development									
Sample Part Number	**233-345**	**NF**	**00**	**-15**	**2**	**A**	**N**	**H**	**T**
Basic Number	**233-345**								
Finish	See Material and Finish table								
Connector Style[1]	See Connector Style table								
Shell Size	**15**								
USB Performance	**2** = USB 2.0								
USB Interface Type	**A** = Type A								
Alternate Polarization[1]	**A**, **B**, **C**, **D**, **E**, **N** = Normal; per MIL-DTL-38999								
USB Orientation	**H** = Horizontal **V** = Vertical								
Shrink Boot	**T** = Shrink Boot; Omit for none								

Material and Finish	
NF	Aluminum/cadmium, olive drab
M	Aluminum/electroless nickel
MT	Alumimun/nickel PTFE
ZR	Aluminum/black zinc-nickel

Connector Style	
G6	Plug
07	Rear panel mount, jam nut receptacle
00	Wall mount receptacle with slotted holes
D0	Wall mount receptacle with round holes
CM	Wall mount receptacle with metric clinch nuts

USB 2.0 Wiring				
Pin	**Name**	**Cable Color (USB)**	**Description**	**Recommended Wire Sizes (AWG)**
1	(V Bus)	Red	+5 V	22
2	(D-)	White	Data -	28
3	(D+)	Green	Data +	28
4	(GND)	Black	Ground	22

USB Receptacle Orientation Options (Partial Views Shown)

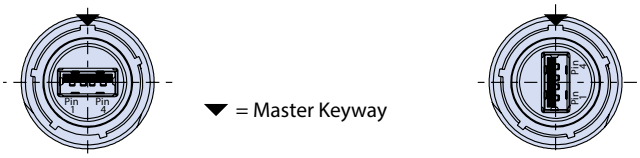

NOTES

1. See Section A for alternate key/keyway positions and panel cutout dimensions
2. Front panel mount only
3. Crimp removable size 22 socket contacts (M39029/56-348) supplied loose
4. Meets IP67 in unmated condition, IP68 mated
5. Receptacle has USB female receptacle mating interface

All external dimensions, features, etc. compliant with D38999/20, /24, &/26. Consult factory for additional information.

G6 PLUG WITH ACCESSORY THREADS

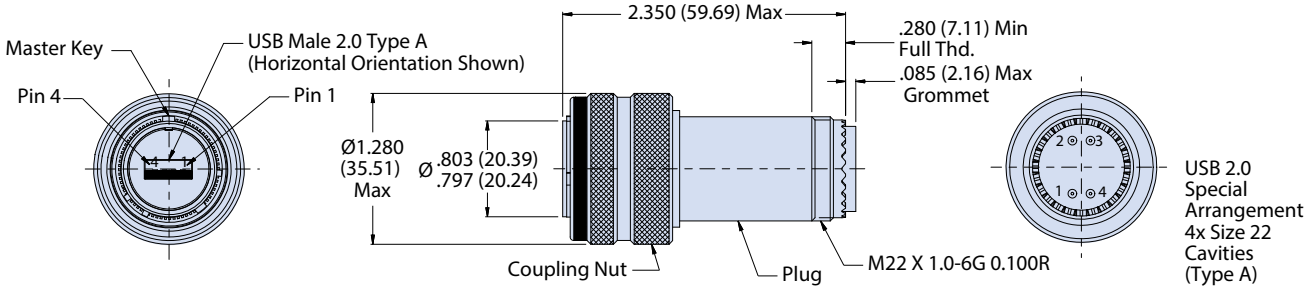

© 2022 Glenair, Inc • 1211 Air Way, Glendale, CA 91201 • 818-247-6000 • www.glenair.com • U.S. CAGE code 06324 • SuperNine Catalog
Dimensions in Inches (millimeters) are subject to change without notice.

SuperNine® USB 2.0 type A

MIL-DTL-38999 Series III Type connectors

233-345 Receptacle with size 22 crimp removeable contacts

07 - REAR PANEL MOUNT, JAM NUT RECEPTACLE WITH ACCESSORY THREADS

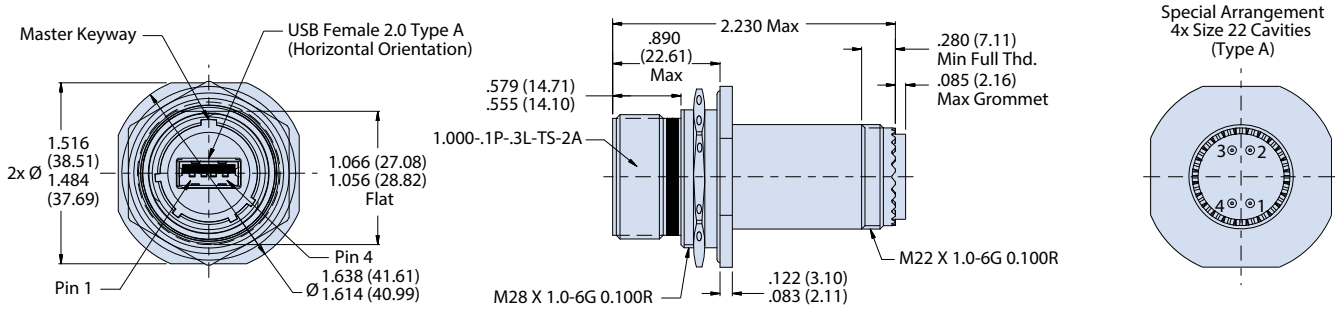

00 WALL MOUNT RECEPTACLE WITH ACCESSORY THREADS

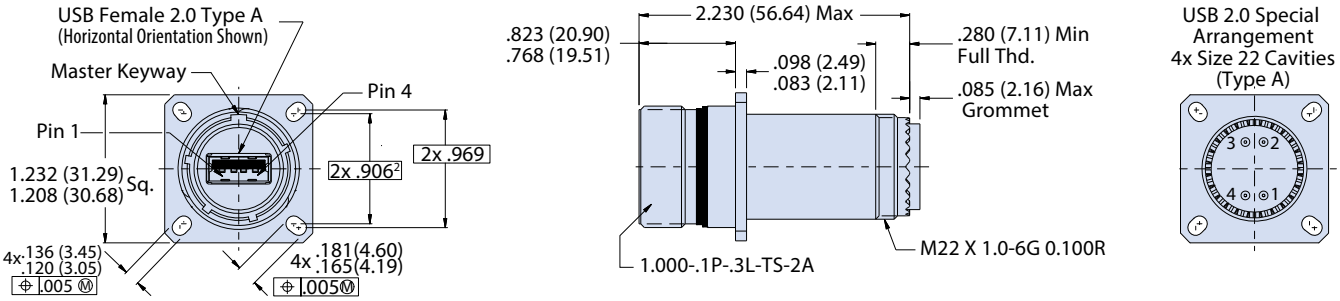

DO - WALL MOUNT RECEPTACLES WITH ACCESSORY THREADS

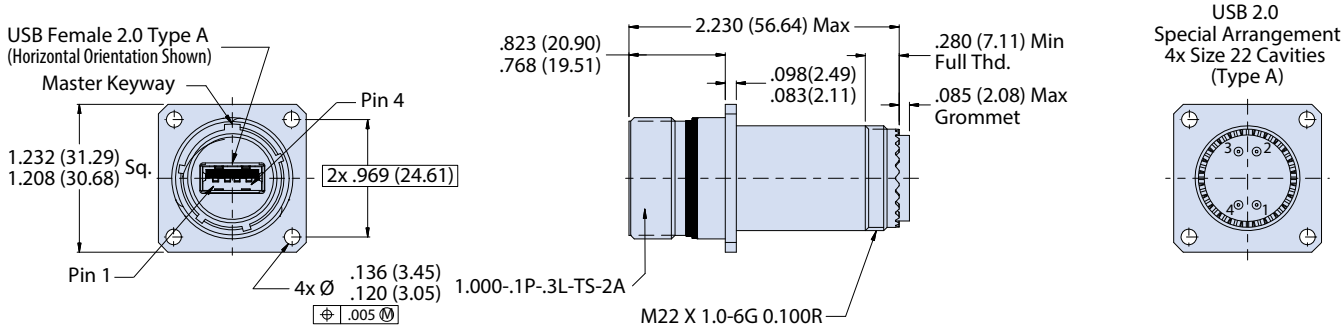

CM - WALL MOUNT RECEPTACLES WITH ACCESSORY THREADS

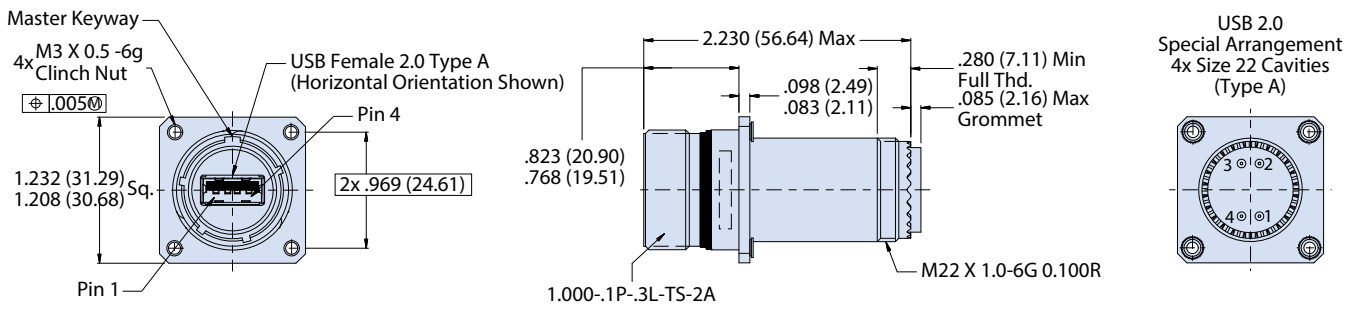

© 2022 Glenair, Inc • 1211 Air Way, Glendale, CA 91201 • 818-247-6000 • www.glenair.com • U.S. CAGE code 06324 • SuperNine Catalog

Dimensions in Inches (millimeters) are subject to change without notice.

SuperNine® USB 2.0 type A

MIL-DTL-38999 Series III Type connectors

233-370 Feed-thru receptacle with front/rear USB interface



Feed-Thru
Front View

Part Number Development									
Sample Part Number	**233-370**	**NF**	**00**	**-17**	**2**	**A**	**A**	**N**	**H**
Basic Number	**233-370**								
Finish	See Material and Finish table								
Connector Style[1]	See Connector Style table								
Shell Size	**15** or **17**								
USB Performance	**2** = USB 2.0								
USB Front Interface	**A** = Type A								
USB Rear Interface	**A** = Type A								
Alternate Polarization[1]	**A**, **B**, **C**, **D**, **E**, **N** = Normal								
USB Orientation	**H** = Horizontal **V** = Vertical								

USB Receptacle Orientation Options (Partial Views Shown)

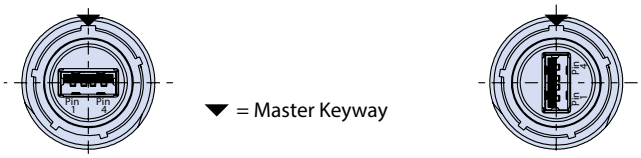

Horizontal Vertical

Material and Finish	
NF	Aluminum/cadmium, olive drab
M	Aluminum/electroless nickel
MT	Alumimun/nickel PTFE
ZR	Aluminum/black zinc-nickel

Connector Style	
07	Rear panel mount, jam nut receptacle
00	Wall mount receptacle with slotted holes[2]
D0	Wall mount receptacle with round holes
CM	Wall mount receptacle with metric clinch nuts

NOTES

1. See Section A for alternate key/keyway positions and panel cutout dimensions
2. Front panel mount only
3. Meets IP67 in unmated condition, IP68 mated
4. Feedthru has front and rear USB female mating interface

USB 2.0 Wiring				
Pin	Name	Cable Color (USB)	Description	Recommended Wire Sizes (AWG)
1	(V Bus)	Red	+5 V	22
2	(D-)	White	Data -	28
3	(D+)	Green	Data +	28
4	(GND)	Black	Ground	22

Jam Nut Mount							
	Ø H		J		K Flat		
Shell Size	in	mm	in	mm	in	mm	L Thread
15	1.638	41.61	1.516	38.51	1.066	27.08	M28 X 1.0-6G 0.100R
	1.614	41.00	1.484	37.69	1.056	26.82	
17	1.764	44.81	1.642	41.71	1.191	30.25	M32 X 1.0-6G 0.100R[4]
	1.740	44.20	1.610	40.89	1.181	30.00	

Wall Mount													
	A Thread	B Sq		C Bsc		D Bsc[2]		E		F		Ø G Holes	
Shell Size		in	mm	in	mm	in	mm	in	mm	in	mm	in	mm
15	1.0000-.1P-.3L-TS-2A	1.232 1.208	31.29 30.68	.969	24.61	.906	23.01	.136 0.120	3.45 3.05	0.181 0.165	4.60 4.19	0.136 0.120	3.45 3.05
17	1.1875-.1P-.3L-TS-2A	1.323 1.299	33.60 32.99	1.062	26.97	.969	24.61			0.202 0.186	5.13 4.72		

© 2022 Glenair, Inc • 1211 Air Way, Glendale, CA 91201 • 818-247-6000 • www.glenair.com • U.S. CAGE code 06324 • SuperNine Catalog
Dimensions in Inches (millimeters) are subject to change without notice.

SuperNine® USB 2.0 type A

MIL-DTL-38999 Series III Type connectors

233-370 Feed-thru receptacle with front/rear USB interface

07 - REAR PANEL MOUNT, JAM NUT RECEPTACLE

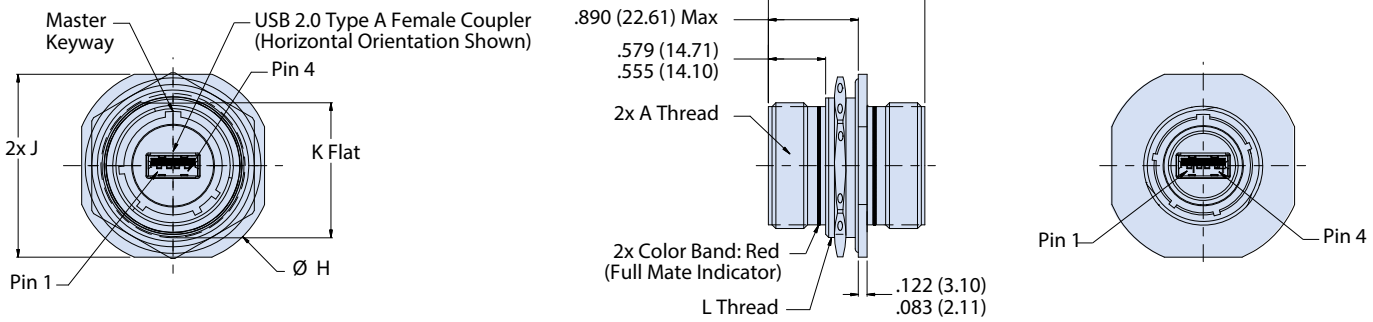

00, DO AND CM - WALL MOUNT RECEPTACLES

00 - Slotted Hole Receptacle Face View

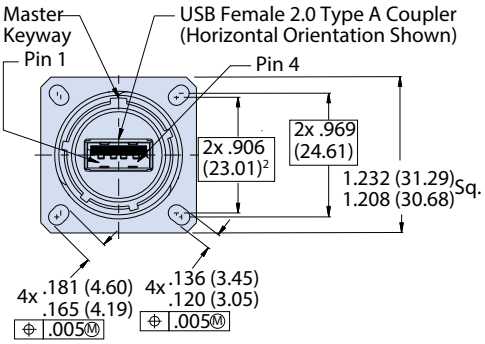

D0 - Round Hole Receptacle Face View

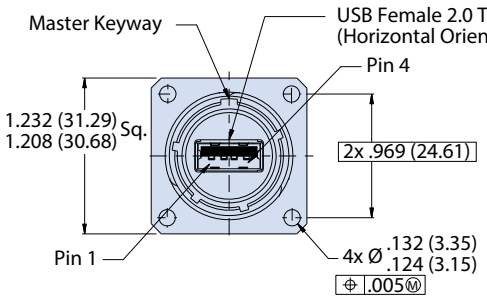

CM - Clinch Hole Receptacle Face View

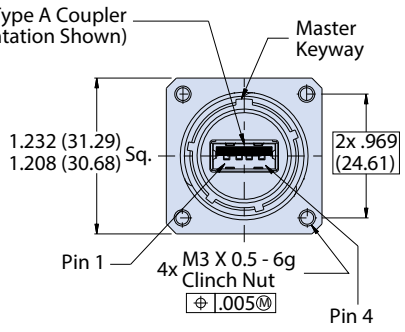

00 and D0 - Receptacle Side View

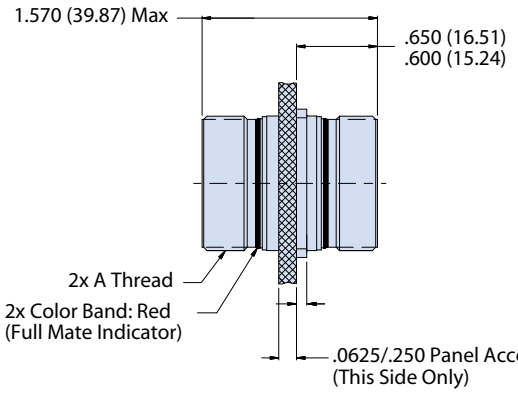

CM - Receptacle Side View

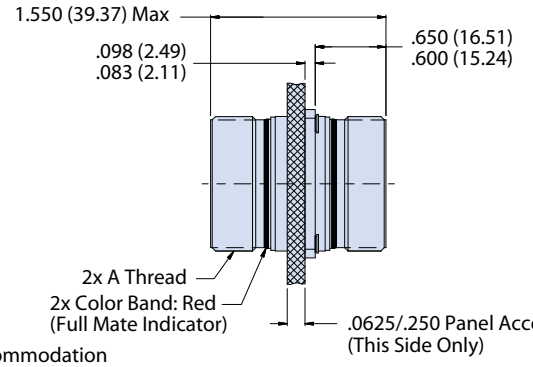

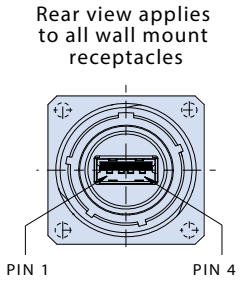

All external dimensions, features, etc. compliant with D38999/20, /24, &/26. Consult factory for additional information.

© 2022 Glenair, Inc • 1211 Air Way, Glendale, CA 91201 • 818-247-6000 • www.glenair.com • U.S. CAGE code 06324 • SuperNine Catalog
Dimensions in Inches (millimeters) are subject to change without notice.

SuperNine® USB 2.0 type A

MIL-DTL-38999 Series III Type connectors

233-390 Memory stick

Part Number Development							
Sample Part Number	**233-390**	**NF**	**32**	**-15**	**N**	**H**	**P**
Series / Basic Part No.	**233-390**						
Finish	**NF** = Aluminum/cadmium olive drab **ME** = Aluminum/electroless nickel **MT** = Aluminum/nickel PTFE **ZR** = Aluminum/zinc-nickel						
Storage Capacity Options	**128** = 128Gb **64** = 64Gb **32** = 32 Gb, **16** = 16 Gb, **8** = 8Gb						
Shell Size	**15**, **17**, **19**, **21**, **23**, **25**						
Alternate Key Position	**A**, **B**, **C**, **D**, **E**, **N** = Normal; Per MIL-DTL-38999						
USB Orientation	**H** = Horizontal **V** = Vertical						
Protective Cover Option	**P** = Series 660-023 cover (omit for none)						



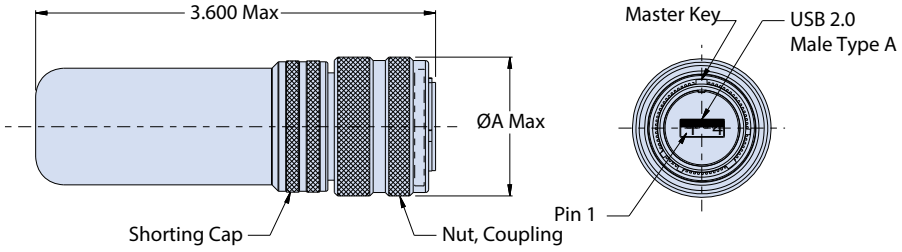

View shown with Protective Cap

Dimensions	
Shell Size	**ØA Max**
15	1.280 (32.5)
17	1.406 (35.7)
19	1.516 (38.5)
21	1.642 (41.7)
23	1.768 (44.9)
25	1.890 (48.0)

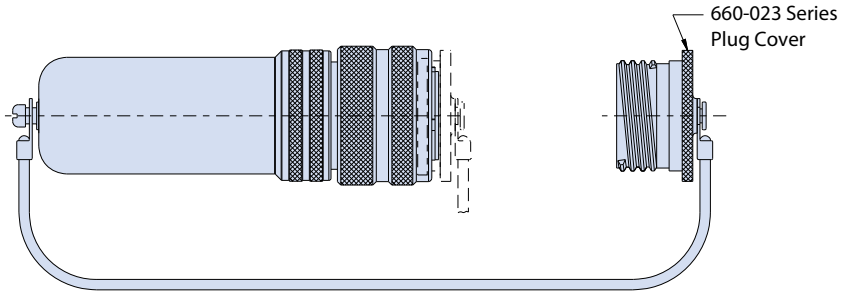

NOTES

1. System requirements: Windows 2000, XP, Vista, Windows 7.
2. Compatibility: plug and play; USB 2.0 Compliance.
3. Interface: USB 2.0, Type A male.
4. Data transfer rates: USB 2.0: Up to 25 Mb/sec read, 10Mb/sec write.
5. Password protection and AES encryption.
6. Mates with 233-340,-341,-342,-343 & -345
7. Environmental parameters: Operating temperatures: -40°C to 85°C (see part number development)
8. Storage temperatures: -40°C to 85°C
9. Humidity range operating: 10% to 95%
10. Memory stick uses USB male plug
11. Material/Finish
    - Barrel, coupling nut:
    - Insulators: high grade rigid dielectric/ N.A.
    - Seal: fluorosilicone/N.A.
    - EMI grounding spring: BeCu /electroless nickel plate.
    - Hardware: stainless steel/passivated

© 2022 Glenair, Inc • 1211 Air Way, Glendale, CA 91201 • 818-247-6000 • www.glenair.com • U.S. CAGE code 06324 • SuperNine Catalog
Dimensions in Inches (millimeters) are subject to change without notice.

SuperNine® USB 3.0 type A

MIL-DTL-38999 Series III Type connectors

233-392 USB 3.0 memory stick

Part Number Development							
Sample Part Number	**233-392**	**NF**	**32**	**15**	**-N**	**H**	**P**
Series / Basic Part No.	**233-392**						
Material/Finish	**NF** = Aluminum/cadmium olive drab **ME** = Aluminum/electroless nickel **MT** = Aluminum/nickel PTFE **ZR** = Aluminum/zinc-nickel						
Storage Capacity Options	**32** = 32 GB, **64** = 64 GB, **128** = 128 GB						
Shell Size	**15**						
Alternate Polarization	**A**, **B**, **C**, **D**, **E**, **N** = Normal; Per MIL-DTL-38999						
USB Orientation	**H** = Horizontal **V** = Vertical						
Protective Cover Option	**P** = Series 660-023 cover; Omit for none						

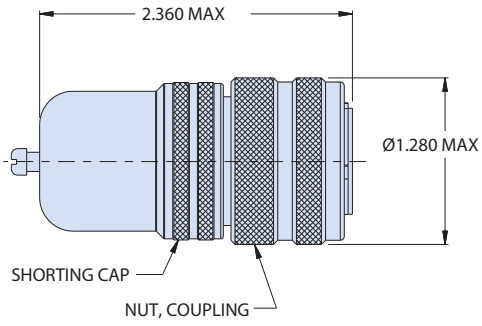

Table II

Read / Write Performance		
Capacity	Read (MB/s)	Write (MB/s)
32 GB	190	45
64 GB	190	95
128 GB	195	95
256 GB	180	130

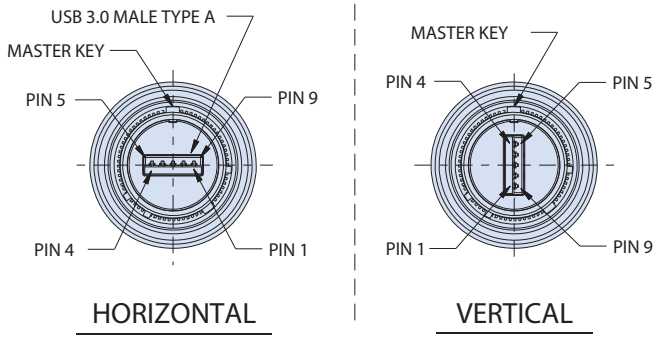

NOTES

1. Contact factory for details of protective cover options.
2. This connector is designed to mate with Glenair part numbers 233-340,-341,-342,-343 &-345.
3. USB flash memory specifications:
   - Storage capacity - 32 GB, 64 GB, 128 GB (consult factory for other capacity options)
   - System requirements - windows 2000, xp, vista, windows 7.
   - Compatibility - plug and play; USB 3.0 compliance; backward compatible with USB 2.0.
   - Interface - USB 3.0, Type a male.
   - Data transfer rates - see table II
   - Password protection and AES encryption.
   - Environmental parameters:
     - » Operating temperatures - -40°c to 85°c
     - » Storage temperatures - -40°c to 85°c
     - » Humidity range operating - 10% to 95%.
4. Material/finishes:
   - Barrel, coupling nut - see part number development
   - Insulators-high grade rigid dielectric/N.A.
   - Seal: fluorosilicone/N.A.
   - EMI grounding spring-BeCu/ electroless nickel plate.
   - Hardware: stainless steel/ passivated
5. Assembly shall be identified with Glenair's name, part number and date code, space permitting.
6. Interpret drawing per ASME Y14.5 - 2009.

© 2022 Glenair, Inc • 1211 Air Way, Glendale, CA 91201 • 818-247-6000 • www.glenair.com • U.S. CAGE code 06324 • SuperNine Catalog
Dimensions in Inches (millimeters) are subject to change without notice.

Rev. 03.12.24

SuperNine® USB 2.0 type A

MIL-DTL-38999 Series III Type connectors

2330-0015 USB 2.0 Cable Assembly



2330-0015 Glenair SuperSeal™ USB 2.0 cable jumpers, with SuperNine® connectors to standard USB Type A plug

SuperSeal USB connectors are IP67 open face rated and IP68 in the mated condition for complete protection in harsh environments. SuperSeal connector styles include plug, wall mount and jam-nut receptacles. Wall mount receptacles are available with slotted holes and straight cable exit. USB 2.0 can be ordered in horizontal or vertical orientation to provide further security against mis-mating and conform to existing USB orientations. Please consult factory for custom configurations.

All external dimensions, features, etc. compliant with D38999/20, /24, &/26. Consult factory for additional information.

Material and Finish	
NF	Aluminum/cadmium, olive drab
ME	Aluminum/electroless nickel
ZR	Zinc nickel, black (tri-valent chromium) RoHS compliant

Connector Style	
G6	Plug
07	Rear panel mount, jam nut receptacle
00	Wall mount receptacle with slotted holes[2]

Part Number Development

Sample Part Number	2330-0015	NF	07	S	-15	2	A	N	H	A	S	-03
Basic Number	2330-0015											
P1 Finish	See Material and Finish table											
P1 Connector Style[1]	See Connector Style table											
P1 Cable Exit	S = Staight											
P1 Shell Size	15											
USB Performance	2 = USB 2.0											
USB Interface	A = Type A											
Polarization	N = Normal											
USB Orientation	H = Horizontal V = Vertical											
P2 Connector Style	A - Type A USB plug											
P2 Cable Exit	S = Straight											
Standard Lengths	01, 02, 03, 06, 10, 15 and 25 feet in length											

USB Receptacle Orientation Options (Partial Views Shown)

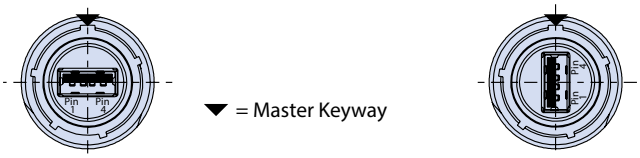

Horizontal Vertical

NOTES

1. See Section A for panel cutout dimensions
2. Meets IP67 in unmated condition, IP68 mated
3. Standard configurations provided with potted back end
4. SuperSeal plug houses USB plug. Superseal receptacle houses USB receptacle

© 2022 Glenair, Inc • 1211 Air Way, Glendale, CA 91201 • 818-247-6000 • www.glenair.com • U.S. CAGE code 06324 • SuperNine Catalog
Dimensions in Inches (millimeters) are subject to change without notice.

SuperNine® USB 2.0 type A

MIL-DTL-38999 Series III Type connectors

2330-0015 USB 2.0 Cable Assembly

AVAILABLE P1 CONNECTOR DIMENSIONS, SHELL SIZE 15

G6 Plug

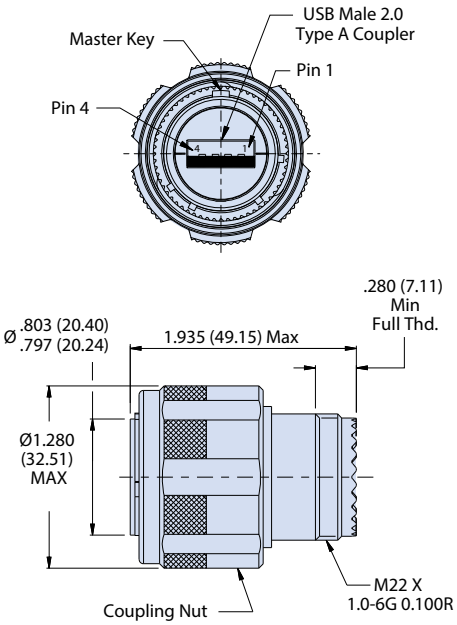

07 Receptacle, Jam-Nut Mount

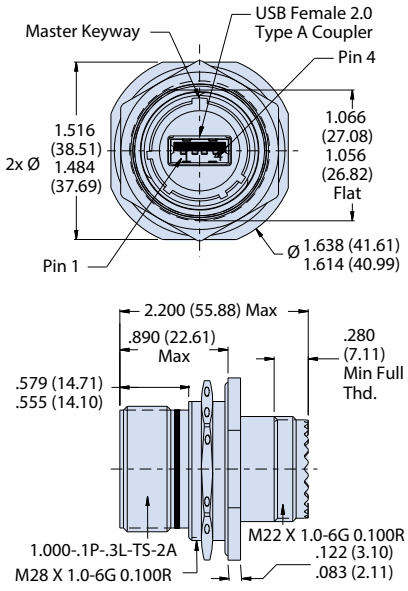

00 Receptacle, Wall Mount with Slotted Holes

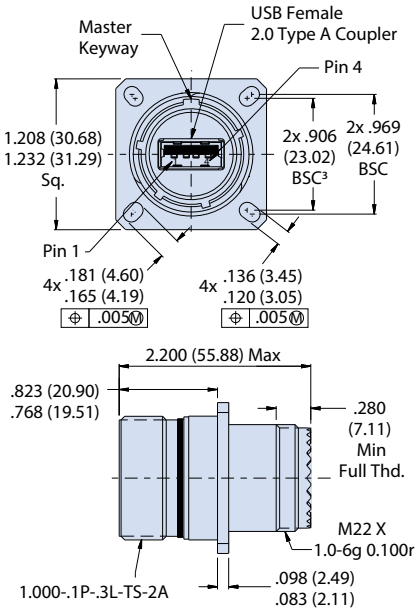

CABLE ASSEMBLY SHOWN WITH PLUG CONNECTOR STYLE

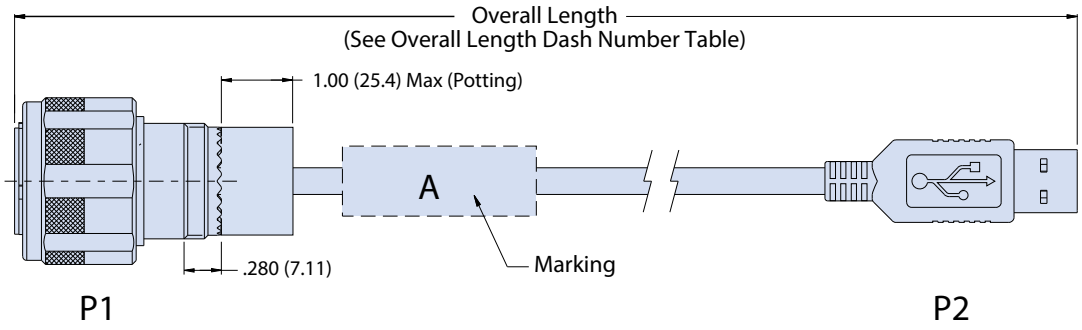

© 2022 Glenair, Inc • 1211 Air Way, Glendale, CA 91201 • 818-247-6000 • www.glenair.com • U.S. CAGE code 06324 • SuperNine Catalog
Dimensions in Inches (millimeters) are subject to change without notice.

SuperNine® USB 3.0 type A

MIL-DTL-38999 Series III Type connectors

2330-0445 USB 3.0 Cable Assembly



All external dimensions, features, etc. compliant with D38999/20, /24, &/26. Consult factory for additional information.

Material and Finish	
NF	Aluminum/cadmium, olive drab
ME	Aluminum/electroless nickel
ZR	Zinc nickel, black (tri-valent chromium) RoHS compliant

Connector Style	
G6	Plug
07	Rear panel mount, jam nut receptacle
00	Wall mount receptacle with slotted holes[2]

2330-0445 Glenair SuperSeal™ USB 3.0 cable jumpers, with SuperNine® connectors to standard USB Type A plug

SuperSeal USB connectors are IP67 open face rated and IP68 in the mated condition for complete protection in harsh environments. SuperSeal connector styles include plug, wall mount and jam-nut receptacles. USB 3.0 can be ordered in horizontal or vertical orientation to provide further security against mis-mating and conform to existing USB orientations. Please consult factory for custom configurations.

Part Number Development									
Sample Part Number	**2330-0445**	**NF**	**07**	**-15**	**3**	**A**	**N**	**H**	**-03**
Basic Number	**2330-0445**								
P1 Finish	See Material and Finish table								
P1 Connector Style[1]	See Connector Style table								
P1 Shell Size	**15**								
USB Performance	**3** = USB 3.0								
USB Interface	**A** = Type A								
Polarization	**N** = Normal								
USB Orientation	**H** = Horizontal **V** = Vertical								
Overall Length	**01**, **02**, **03**, **06** and **10** feet in length. For lengths longer than 10 feet use 2330-0450 repeaters for optimal performance								

NOTES

1. See Section A for panel cutout dimensions
2. Meets IP67 in unmated condition, IP68 mated
3. USB 3.0 Specifications
   DWV: 100 VAC (RMS)
   IR: 100 Megohms minimum
   Operating Temperature: 20°C to +85°C
4. Standard configurations provided with adhesive lined shrink boot
5. SuperSeal plug houses USB plug. Superseal receptacle houses USB receptacle

USB Receptacle Orientation Options (Partial Views Shown)

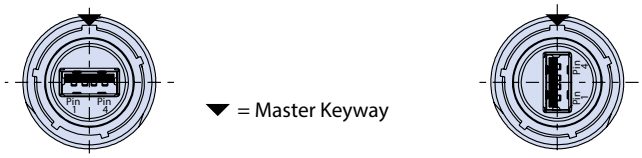

Horizontal Vertical

© 2022 Glenair, Inc • 1211 Air Way, Glendale, CA 91201 • 818-247-6000 • www.glenair.com • U.S. CAGE code 06324 • SuperNine Catalog
Dimensions in Inches (millimeters) are subject to change without notice.

SuperNine® USB 3.0 type A

MIL-DTL-38999 Series III Type connectors

2330-0445 USB 3.0 Cable Assembly

AVAILABLE P 1 CONNECTOR DIMENSIONS, SHELL SIZE 15

G6 Plug

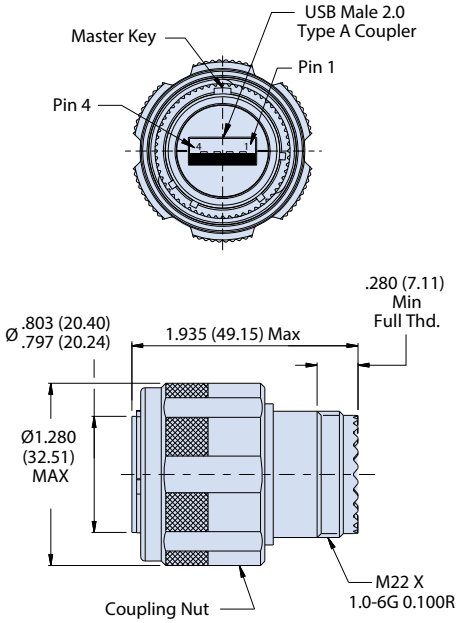

07 Receptacle, Jam-Nut Mount

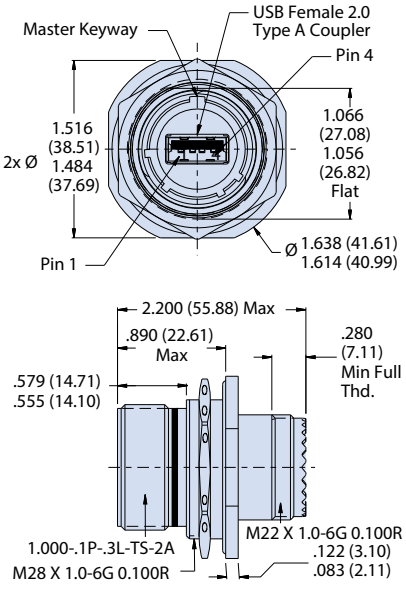

00 Receptacle, Wall Mount

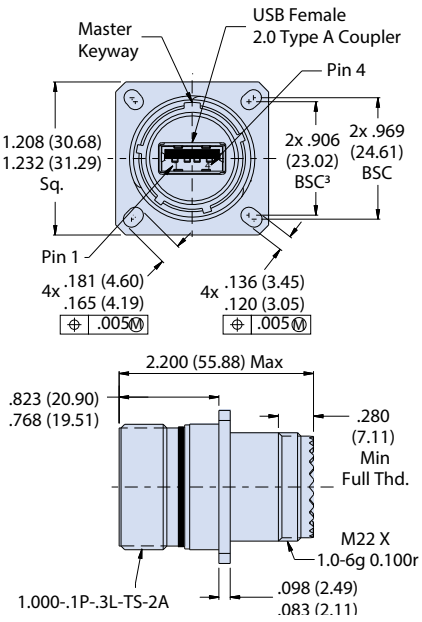

CABLE ASSEMBLY SHOWN WITH PLUG CONNECTOR STYLE

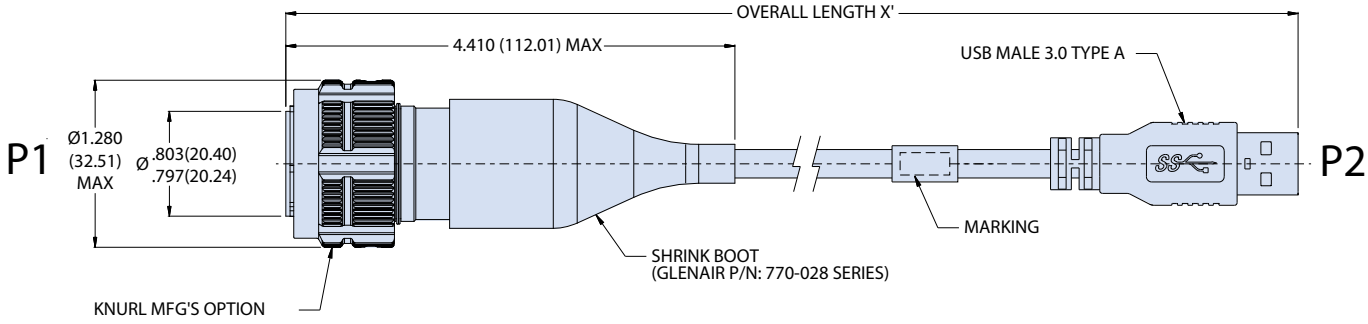

© 2022 Glenair, Inc • 1211 Air Way, Glendale, CA 91201 • 818-247-6000 • www.glenair.com • U.S. CAGE code 06324 • SuperNine Catalog
Dimensions in Inches (millimeters) are subject to change without notice.

SuperNine® USB 3.0 type A

MIL-DTL-38999 Series III Type connectors

233-0450 USB 3.0 Cable Assembly



All external dimensions, features, etc. compliant with D38999/20, /24, &/26. Consult factory for additional information.

Material and Finish	
NF	Aluminum/cadmium, olive drab
ME	Aluminum/electroless nickel
ZR	Zinc nickel, black (tri-valent chromium) RoHS compliant

NOTES

1. Meets IP67 in unmated condition, IP68 mated
2. SuperSeal plug houses USB plug.

2330-0450 Glenair SuperSeal™ USB 3.0 plug cable jumper, with active repeater.

SuperSeal USB cable assemblys with IP67 open face rated connectors offer complete protection from environmental debris and water ingress common under harsh environmental conditions. USB 3.0 can be ordered in horizontal or vertical orientation to provide further security against mis-mating and conforms to existing USB orientations. Additional length options and custom configurations available. Please consult factory.

Part Number Development									
Sample Part Number	**2330-0450**	**NF**	**G6**	**-15**	**3**	**A**	**N**	**H**	**-03**
Basic Number	**2330-0450**								
P1 Finish	See Material and Finish table								
P1 Connector Style[1]	**G6** = Plug								
P1 Shell Size	**15**								
USB Performance	**3** = USB 3.0								
USB Interface	**A** = Type A								
Polarization	**A**, **B**, **C**, **D**, **E**, **N** = Normal								
USB Orientation	**H** = Horizontal **V** = Vertical								
Overall Length	**01** thru **10**; length in feet.								

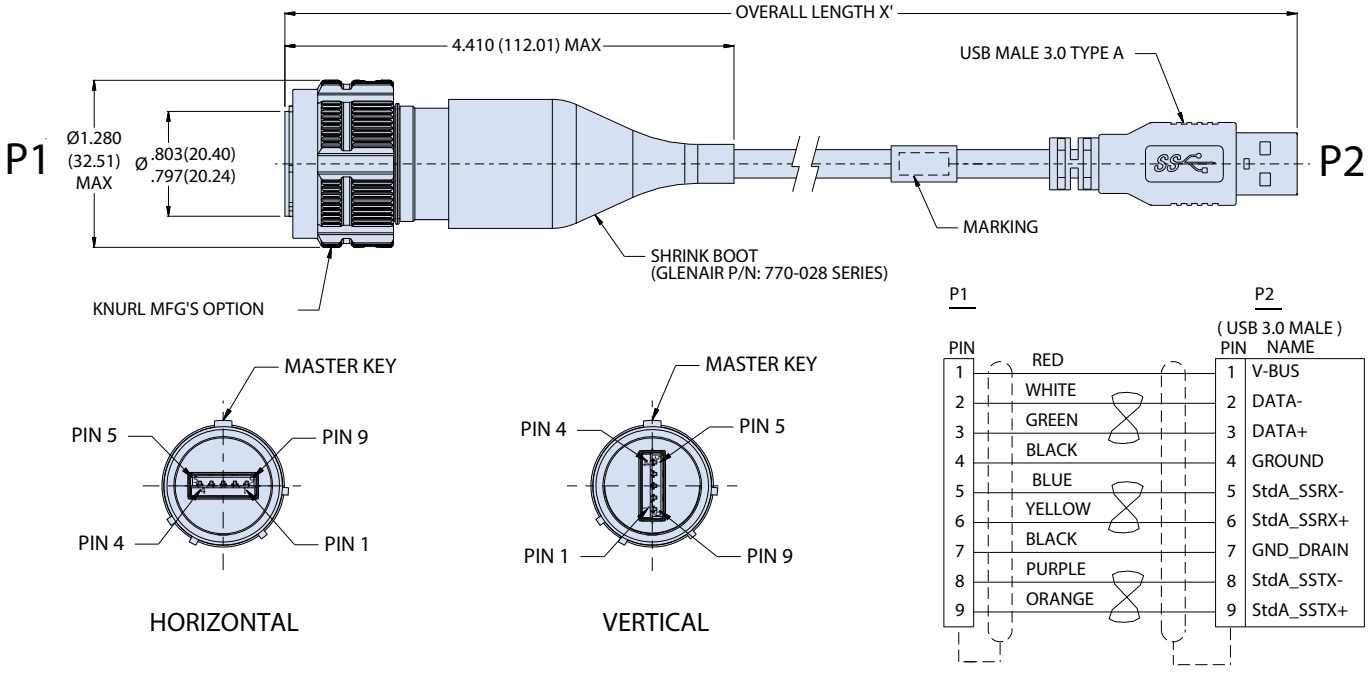

© 2022 Glenair, Inc • 1211 Air Way, Glendale, CA 91201 • 818-247-6000 • www.glenair.com • U.S. CAGE code 06324 • SuperNine Catalog
Dimensions in Inches (millimeters) are subject to change without notice.

SuperNine® USB 3.0 type A

MIL-DTL-38999 Series III Type connectors

Product selection guide



233-360 E-56
SuperSeal™ HDMI 2.0 Type A Panel Mount Couplers with Accessory Threads



233-362 E-59
SuperSeal™ HDMI 2.0 Type A Panel Mount Couplers with PC Tails



233-363 E-61
SuperSeal™ HDMI 2.0 Type A Panel Mount Couplers with Solder Cups



233-364 E-63
SuperSeal™ HDMI 2.0 Type A Panel Mount Couplers with Break-out Board



233-365 E-66
SuperSeal™ HDMI 2.0 Type A Panel Mount Feed-thru Couplers



233-368 E-68
SuperSeal™ HDMI 2.0 Type A Plug Adapter



2330-0455 E-69
SuperSeal™ HDMI 2.0 Cable Assembly

© 2022 Glenair, Inc • 1211 Air Way, Glendale, CA 91201 • 818-247-6000 • www.glenair.com • U.S. CAGE code 06324 • SuperNine Catalog
Dimensions in Inches (millimeters) are subject to change without notice.



SERIES 23

SuperSeal™

HDMI 2.0 Ruggedized Cable Assemblies



HDMI has become the defacto connector interface for the transmission of compressed and uncompressed high-resolution video and is widely supported across multiple manufacturer displays as the replacement for analog video transmission. The HDMI 2.0 standard provides greater audio and video signal capacity and is excellent for delivery of video and audio data where clear, high-quality reproduction is necessary. Although well-suited for commercial applications these interfaces are not designed for exposure to the harsh operating conditions encountered in military field use and harsh-environment aerospace applications. SuperSeal, the SuperNine product series for HDMI 2.0 resolves these shortcomings by introducing a ruggedized solution with increased operating temperature range, improved shock and vibration and IP68 mated and IP67 unmated performance.

- **HDMI 2.0 version**
- **Highly durable SuperSeal insert design, provides enhanced operating temperature, increased life-cycle, and rugged vibration and shock performance**
- **Pre-terminated cable assemblies available for wall mount or jam-nut mount to HDMI interface**

© 2022 Glenair, Inc • 1211 Air Way, Glendale, CA 91201 • 818-247-6000 • www.glenair.com • U.S. CAGE code 06324 • SuperNine Catalog
Dimensions in Inches (millimeters) are subject to change without notice.

SuperNine® HDMI 2.0

MIL-DTL-38999 Series III Type

HDMI Performance Specifications and Orientation Options

HDMI 2.0 Performance Specifications	
Property	**MIL-DTL-38999 Series III Type**
Material and Finish	
Shell/Coupling and Plating	Complete list of options available in the Material and Finish Options portion of this section
Contacts	Copper alloy/gold plate
HDMI Insulator	LCP
Grommet, Peripheral Seal, Interfacial Seal, O-ring	Blended fluorosilicone/silicone elastomer, 30% silicone per ZZ-R-765, 70% fluorosilicone per MIL-R-25988
Shell Size	17 Consult factory for other shell size options
Electrical Specifications	
Data Rate	Up to 18 Gbps
Power Usage	+5.0 volts
Current Rating	0.3 Amps min.
D.W.V.	300 VAC
I.R.	100 Mega Ohms min
Cabling Length	10 Meters Max (recommended)
Shielding	Continuous through coupler or continuous coupler to shell
Environmental/Mechanical Performance	
Sealing	IP67 unmated IP68 mated
Outgassing	**Mod Code 186S** meets outgassing requirements per ASTM E 595 and meets NASA level 3 screening for standard reliability **Mod Code 928** meets outgassing requirements per UL 94 V-0
Operating Temperature	-20°C to +85°C
Backshell Interface	MIL-DTL-38999 Designator H
Mating System	Triple-start stub ACME
Mating Cycles	500

HDMI 2.0 CONNECTOR ORIENTATION OPTIONS

Receptacle

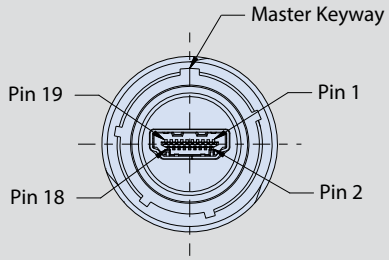

Horizontal

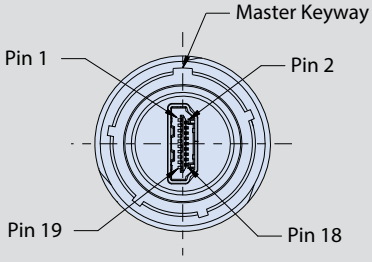

Vertical

Plug

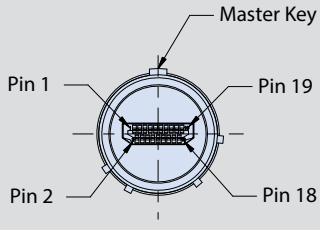

Horizontal

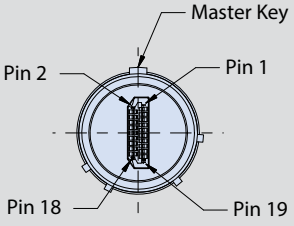

Vertical

© 2022 Glenair, Inc • 1211 Air Way, Glendale, CA 91201 • 818-247-6000 • www.glenair.com • U.S. CAGE code 06324 • SuperNine Catalog
Dimensions in Inches (millimeters) are subject to change without notice.

ADVANCED PERFORMANCE

SuperNine® HDMI 2.0

MIL-DTL-38999 Series III Type

233-360 Panel mount couplers with accessory threads



Part Number Development							
Sample Part Number	**233-360**	**NF**	**00**	**-17**	**N**	**H**	
Basic Number	**233-360**						
Finish	See Material and Finish table						
Connector Style[1]	See Connector Style table						
Shell Size	**17**						
Alternate Key Position[1]	**A**, **B**, **C**, **D**, **E**, **N** = Normal per MIL-DTL-38999						
HDMI Orientation	**H** = Horizontal **V** = Vertical						
Shrink Boot	**T** = Part No. 770-028 (Omit for None)						

Material and Finish	
NF	Aluminum/Cadmium, Olive Drab
ME	Aluminum/Electroless Nickel
MT	Alumimun/Nickel PTFE
ZR	Aluminum/Black Zinc-Nickel
AB	Marine Bronze
XM	Composite/Electroless Nickel

Additional material / finish options available consult factory

Connector Style	
00	Wall mount receptacle with slotted holes
D0	Wall mount receptacle with thru-holes
CM	Wall mount receptacle with metric clinch nuts
CS	Wall mount receptacle with standard clinch nuts
07	Rear panel mount, jam nut receptacle
05	Inline receptacle

All external dimensions, features, etc. compliant with D38999/20, /24, &/26. Consult factory for additional information.

HDMI 2 FEMALE ORIENTATION OPTIONS

(PARTIAL FRONT VIEWS SHOWN)

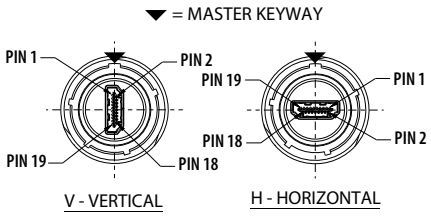

00 - WALL MOUNT RECEPTACLE WITH SLOTTED THRU-HOLES

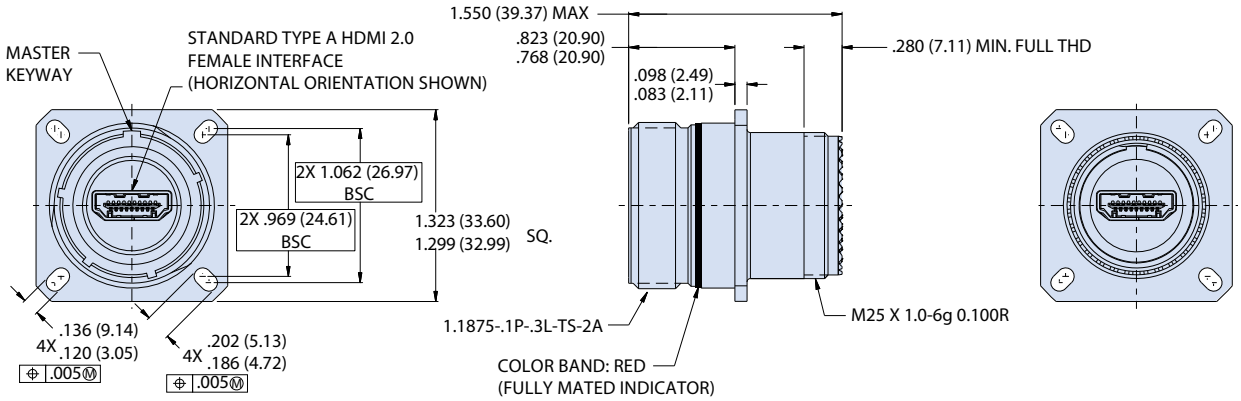

NOTES

1. See Section A for alternate key/keyway positions and panel cutout dimensions
2. Meets IP67 in unmated condition, IP68 mated
3. HDMI Type A female port, front and back
4. Front panel mount only
5. Material and Finish
   - Shell, jam nut: see material finish table
   - Seals: silicone based elastomer
   - Hardware: stainless steel/passivated
6. HDMI:
   - Housing: thermoplastic/NA
   - Shell: copper alloy nickel plated
   - Terminal: copper alloy/gold plated
7. HDMI performance: design meets HDMI 2.0 protocol requirement including 18Gbps of bandwidth and suppots 4K resolution and 60Hz

© 2022 Glenair, Inc • 1211 Air Way, Glendale, CA 91201 • 818-247-6000 • www.glenair.com • U.S. CAGE code 06324 • SuperNine Catalog
Dimensions in Inches (millimeters) are subject to change without notice.

SuperNine® HDMI 2.0

MIL-DTL-38999 Series III Type

233-360 Panel mount couplers with accessory threads

DO - WALL MOUNT RECEPTACLE WITH ROUND THRU-HOLES

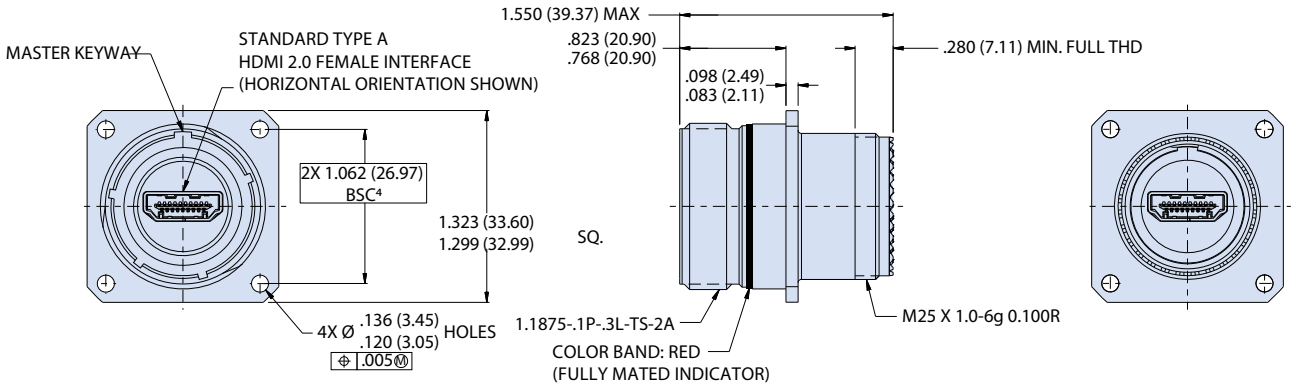

CM - WALL MOUNT RECEPTACLE WITH METRIC CLINCH NUTS

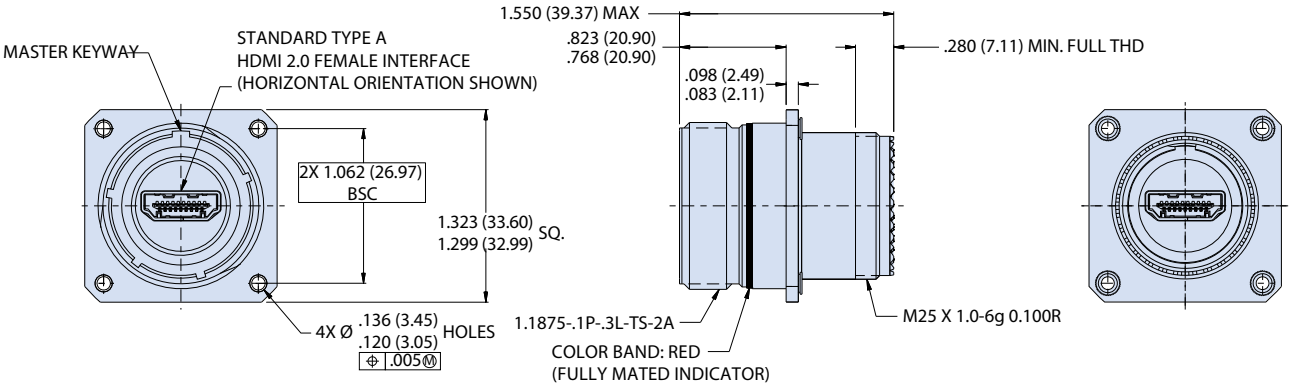

CS - WALL MOUNT RECEPTACLE WITH STANDARD CLINCH NUTS

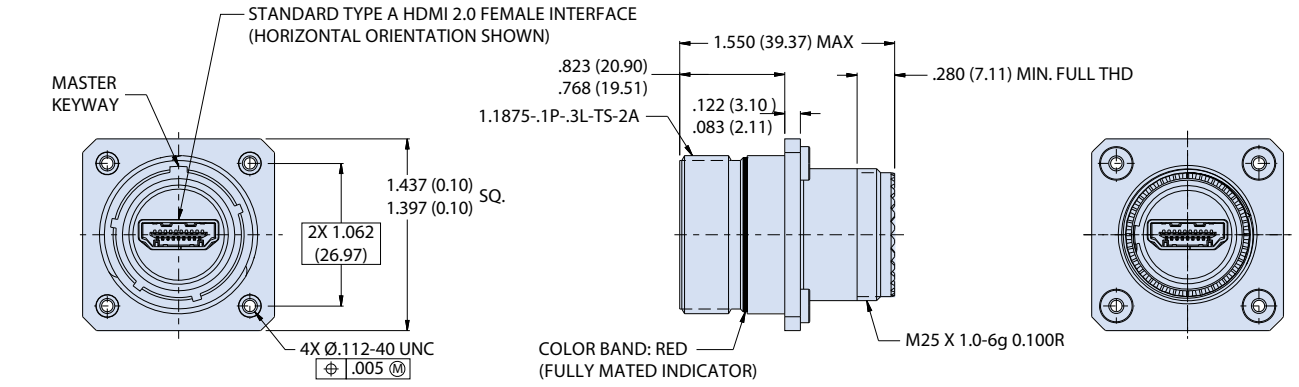

© 2022 Glenair, Inc • 1211 Air Way, Glendale, CA 91201 • 818-247-6000 • www.glenair.com • U.S. CAGE code 06324 • SuperNine Catalog
Dimensions in Inches (millimeters) are subject to change without notice.

SuperNine® HDMI 2.0

MIL-DTL-38999 Series III Type

233-360 Panel mount couplers with accessory threads

07 - REAR PANEL MOUNT, JAM NUT RECEPTACLE

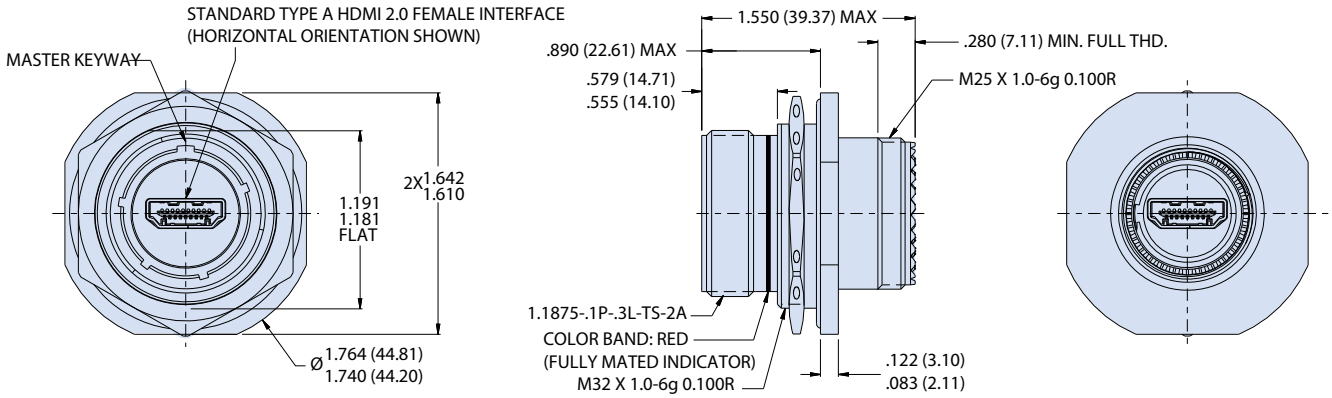

05 - CABLE RECEPTACLE

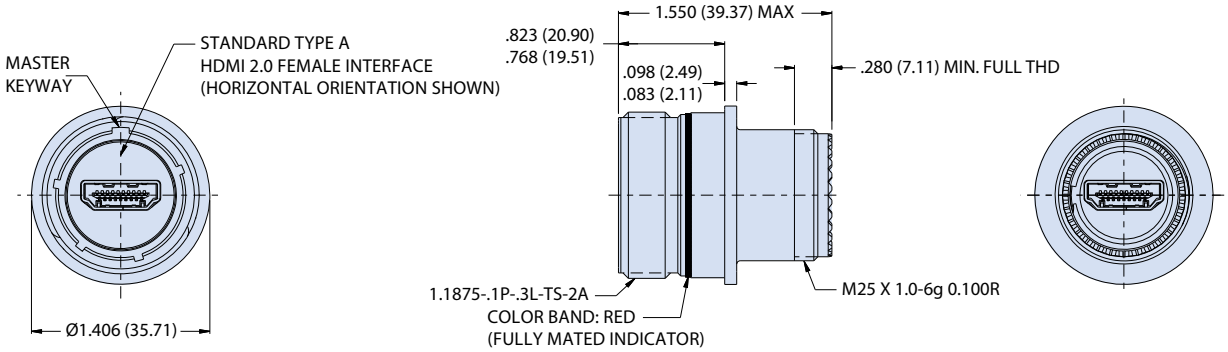

© 2022 Glenair, Inc • 1211 Air Way, Glendale, CA 91201 • 818-247-6000 • www.glenair.com • U.S. CAGE code 06324 • SuperNine Catalog
Dimensions in Inches (millimeters) are subject to change without notice.

SuperNine® HDMI 2.0

MIL-DTL-38999 Series III Type

233-362 Panel mount receptacles with PC tails



HDMI 2 FEMALE ORIENTATION OPTIONS

PCB LAYOUT (SOLDER SIDE)

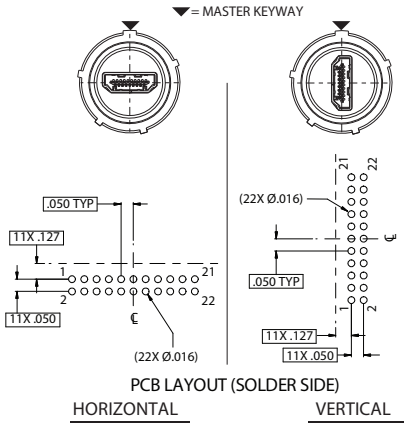

Part Number Development							
Sample Part Number	**233-362**	**NF**	**00**	**-17**	**N**	**H**	
Basic Number	**233-362**						
Finish	See Material and Finish table						
Connector Style[1]	See Connector Style table						
Shell Size	**17**						
Alternate Key Position[1]	**A**, **B**, **C**, **D**, **E**, **N** = Normal per MIL-DTL-38999						
HDMI Orientation	**H** = Horizontal **V** = Vertical						
Shrink Boot	**T** = Part No. 770-028 (Omit for None)						

Material and Finish	
NF	Aluminum/Cadmium, Olive Drab
ME	Aluminum/Electroless Nickel
MT	Alumimun/Nickel PTFE
ZR	Aluminum/Black Zinc-Nickel
AB	Marine Bronze
XM	Composite/Electroless Nickel

Additional material / finish options available consult factory

Connector Style	
00	Wall mount receptacle with slotted holes
D0	Wall mount receptacle with round holes
CM	Wall mount receptacle with metric clinch nuts
07	Rear panel mount, jam nut receptacle

All external dimensions, features, etc. compliant with D38999/20, /24, &/26. Consult factory for additional information.

00 - WALL MOUNT RECEPTACLE WITH SLOTTED THRU-HOLES

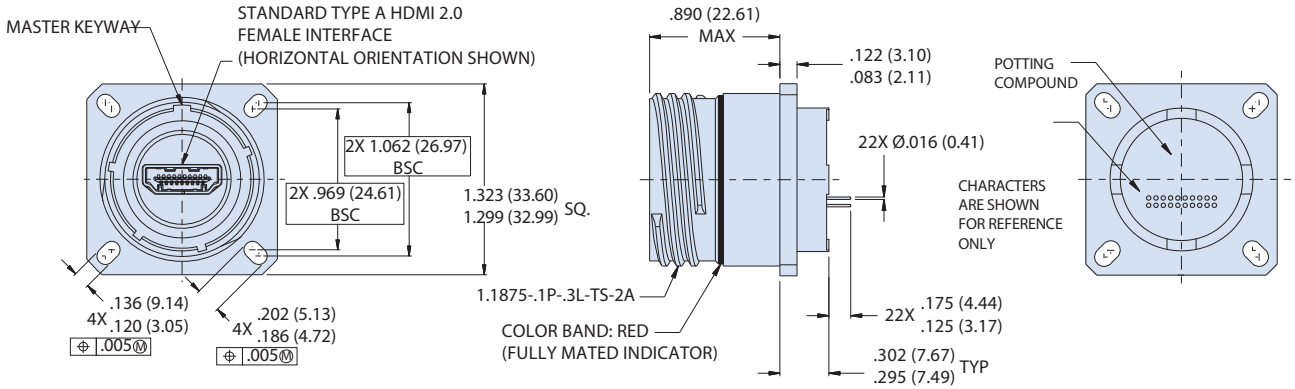

NOTES

1. See Section A for alternate key/keyway positions and panel cutout dimensions
2. Meets IP67 in unmated condition, IP68 mated
3. HDMI Type A female port, front and back
4. Front panel mount only
5. Material and Finish
   - Shell, jam nut: see material/finish table
   - Seals: silicone based elastomer
   - Hardware: stainless steel/passivated
6. HDMI:
   - Housing: thermoplastic/NA
   - Shell: copper alloy nickel plated
   - Terminal: copper alloy/gold plated
7. HDMI performance: design meets HDMI 2.0 protocol requirement including 18Gbps of bandwidth and suppots 4K resolution and 60Hz

© 2022 Glenair, Inc • 1211 Air Way, Glendale, CA 91201 • 818-247-6000 • www.glenair.com • U.S. CAGE code 06324 • SuperNine Catalog

Dimensions in Inches (millimeters) are subject to change without notice.

SuperNine® HDMI 2.0

MIL-DTL-38999 Series III Type

233-362 Panel mount receptacles with PC tails

DO - WALL MOUNT RECEPTACLE WITH ROUND THRU-HOLES

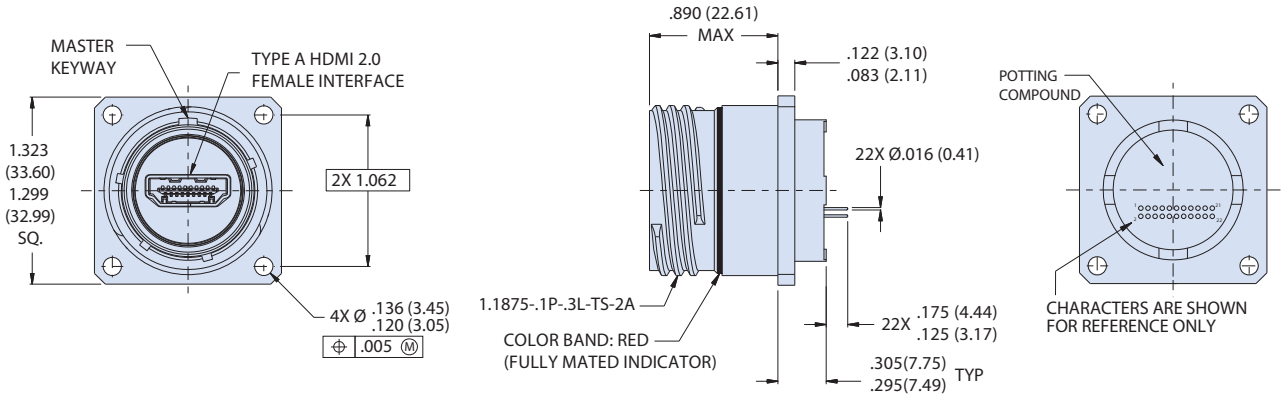

CM - WALL MOUNT RECEPTACLE WITH METRIC CLINCH NUTS

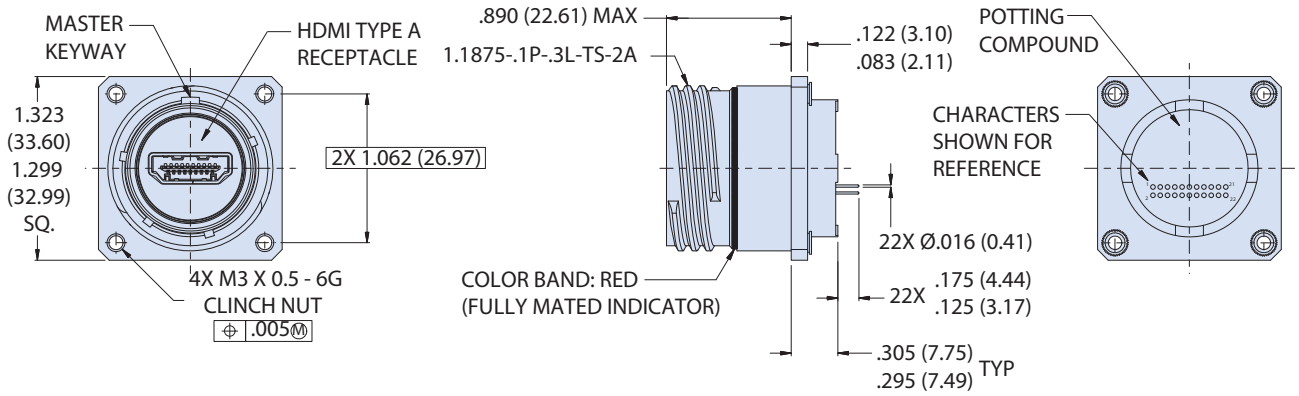

07 - JAM-NUT MOUNT RECEPTACLE

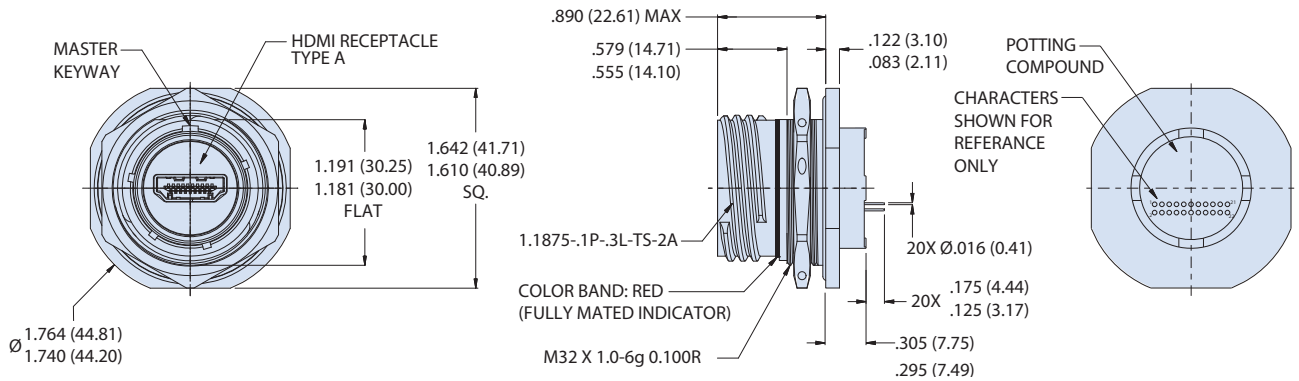

© 2022 Glenair, Inc • 1211 Air Way, Glendale, CA 91201 • 818-247-6000 • www.glenair.com • U.S. CAGE code 06324 • SuperNine Catalog
Dimensions in Inches (millimeters) are subject to change without notice.

ADVANCED PERFORMANCE

SuperNine® HDMI 2.0

MIL-DTL-38999 Series III Type

233-363 Panel mount connectors with solder cups

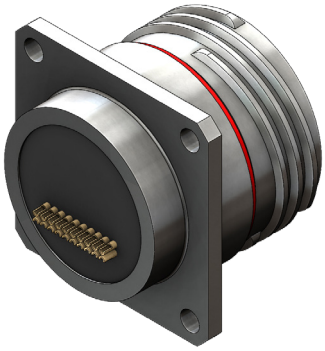

Part Number Development							
Sample Part Number	**233-363**	**NF**	**00**	**-17**	**N**	**H**	
Basic Number	**233-363**						
Finish	See Material and Finish table						
Connector Style[1]	See Connector Style table						
Shell Size	**17**						
Alternate Key Position[1]	**A**, **B**, **C**, **D**, **E**, **N** = Normal per MIL-DTL-38999						
HDMI Orientation	**H** = Horizontal **V** = Vertical						
Shrink Boot	**T** = Part No. 770-028 (Omit for None)						

Material and Finish	
NF	Aluminum/Cadmium, Olive Drab
ME	Aluminum/Electroless Nickel
MT	Alumimun/Nickel PTFE
ZR	Aluminum/Black Zinc-Nickel
AB	Marine Bronze
XM	Composite/Electroless Nickel

Additional material / finish options available consult factory

Connector Style	
00	Wall mount receptacle with slotted holes
D0	Wall mount receptacle with thru-holes
CM	Wall mount receptacle with metric clinch nuts
07	Rear panel mount, jam nut receptacle

All external dimensions, features, etc. compliant with D38999/20, /24, &/26. Consult factory for additional information.

HDMI 2 FEMALE ORIENTATION OPTIONS

(PARTIAL FRONT VIEWS SHOWN)

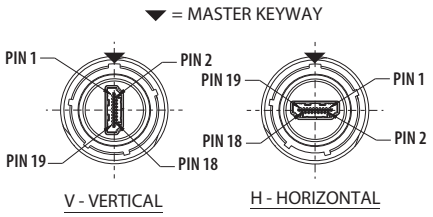

00 - WALL MOUNT RECEPTACLE WITH SLOTTED THRU-HOLES

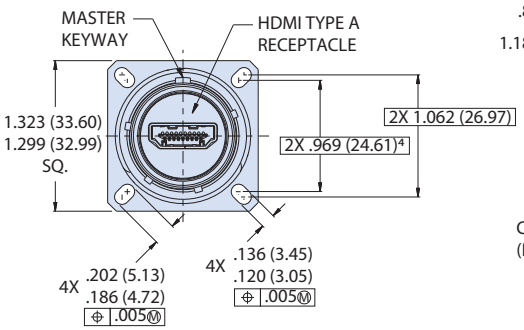

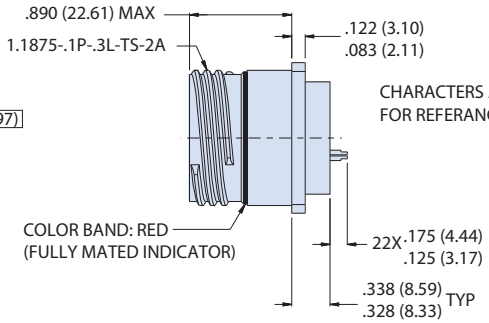

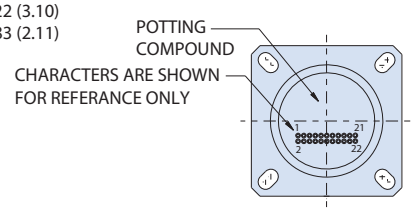

NOTES

1. See Section A for alternate key/keyway positions and panel cutout dimensions
2. Meets IP67 in unmated condition, IP68 mated
3. HDMI Type A female port, front and back
4. Front panel mount only
5. Material and Finish
   - Shell, jam nut: see material finish table
   - Seals: silicone based elastomer
   - Hardware: stainless steel/passivated
6. HDMI:
   - Housing: thermoplastic/NA
   - Shell: copper alloy nickel plated
   - Terminal: copper alloy/gold plated
7. HDMI performance: design meets HDMI 2.0 protocol requirement including 18Gbps of bandwidth and suppots 4K resolution and 60Hz

© 2022 Glenair, Inc • 1211 Air Way, Glendale, CA 91201 • 818-247-6000 • www.glenair.com • U.S. CAGE code 06324 • SuperNine Catalog
Dimensions in Inches (millimeters) are subject to change without notice.

SuperNine® HDMI 2.0

MIL-DTL-38999 Series III Type

233-363 Panel mount connectors with solder cups

DO - WALL MOUNT RECEPTACLE WITH ROUND THRU-HOLES

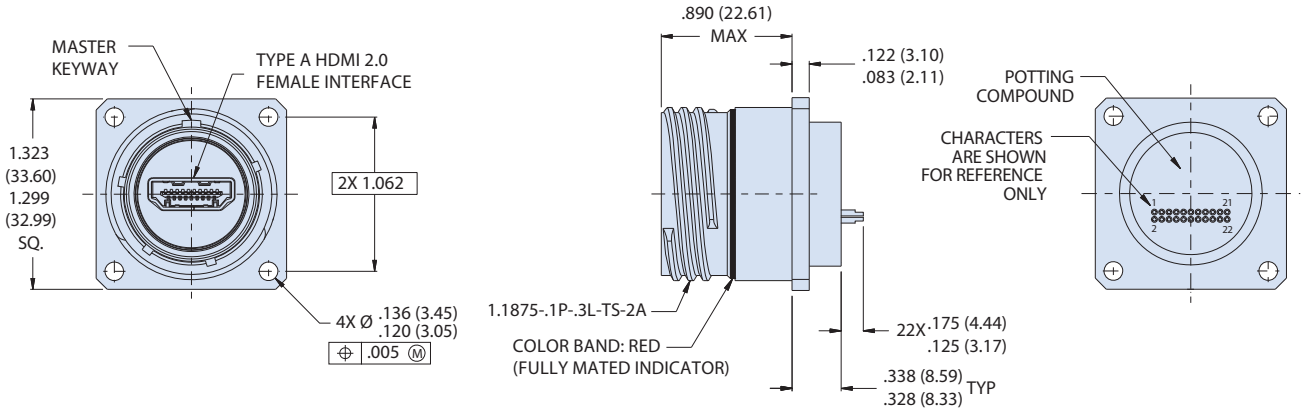

CM - WALL MOUNT RECEPTACLE WITH METRIC CLINCH NUTS

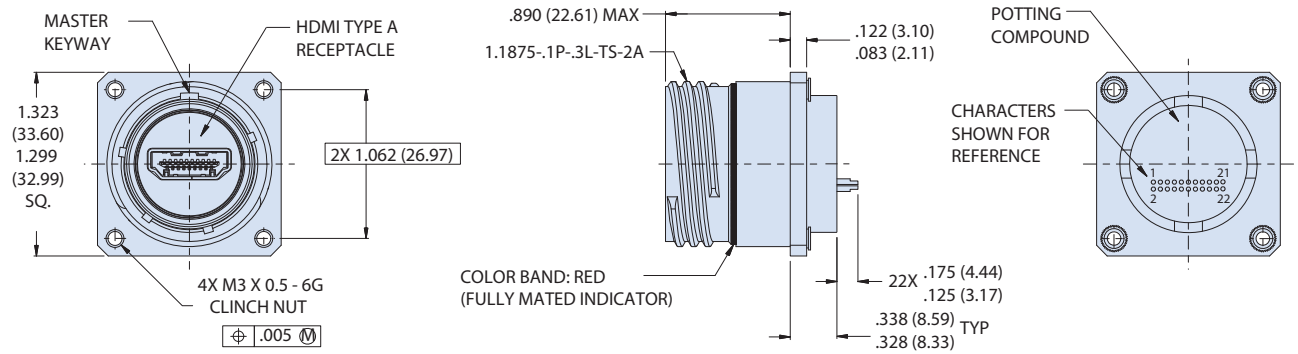

07 - JAM-NUT MOUNT RECEPTACLE

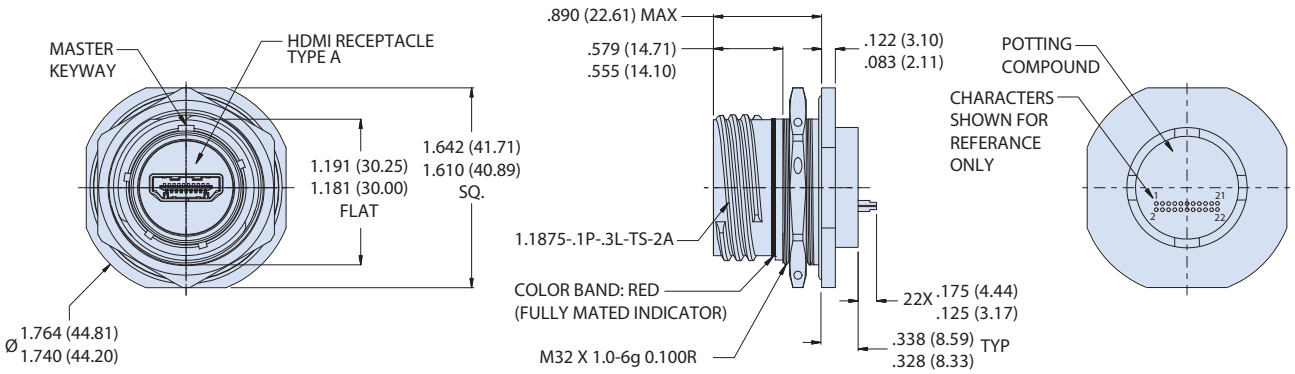

© 2022 Glenair, Inc • 1211 Air Way, Glendale, CA 91201 • 818-247-6000 • www.glenair.com • U.S. CAGE code 06324 • SuperNine Catalog
Dimensions in Inches (millimeters) are subject to change without notice.

ADVANCED PERFORMANCE

SuperNine® HDMI 2.0

MIL-DTL-38999 Series III Type

233-364 Panel mount receptacles with break-out board



Part Number Development							
Sample Part Number	**233-364**	**NF**	**00**	**-17**	**N**	**H**	
Basic Number	**233-364**						
Finish	See Material and Finish table						
Connector Style[1]	See Connector Style table						
Shell Size	**17**						
Alternate Key Position[1]	**A**, **B**, **C**, **D**, **E**, **N** = Normal per MIL-DTL-38999						
HDMI Orientation	**H** = Horizontal **V** = Vertical						
Shrink Boot	**T** = Part No. 770-028 (Omit for None)						

Material and Finish	
NF	Aluminum/Cadmium, Olive Drab
ME	Aluminum/Electroless Nickel
MT	Alumimun/Nickel PTFE
ZR	Aluminum/Black Zinc-Nickel
AB	Marine Bronze
XM	Composite/Electroless Nickel

Additional material / finish options available consult factory

Connector Style	
00	Wall mount receptacle with slotted holes
D0	Wall mount receptacle with thru-holes
CM	Wall mount receptacle with metric clinch nuts
CS	Wall mount receptacle with standard clinch nuts
07	Rear panel mount, jam nut receptacle
05	Inline receptacle

HDMI 2 FEMALE ORIENTATION OPTIONS

(PARTIAL FRONT VIEWS SHOWN)

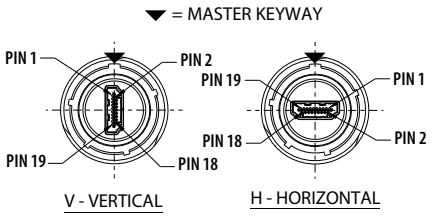

All external dimensions, features, etc. compliant with D38999/20, /24, &/26. Consult factory for additional information.

00 - WALL MOUNT RECEPTACLE WITH SLOTTED THRU-HOLES

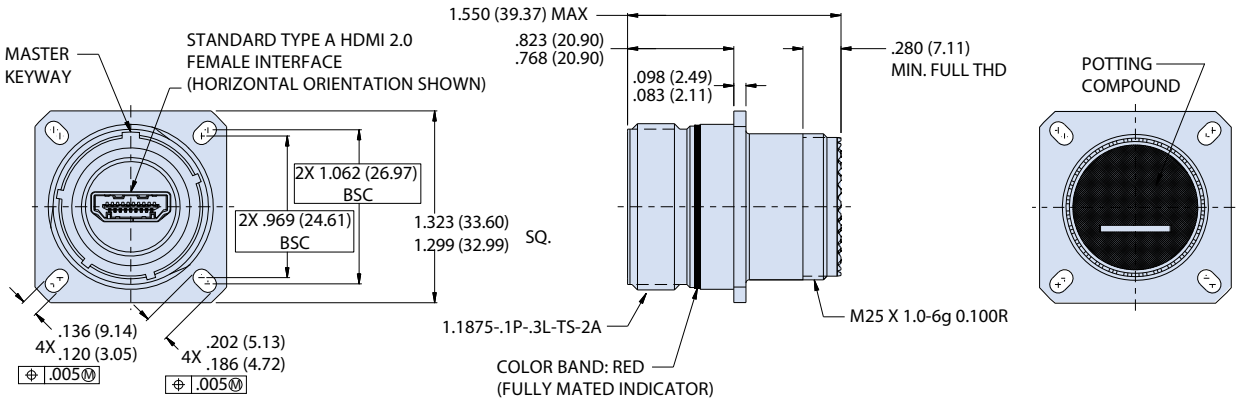

NOTES

1. See Section A for alternate key/keyway positions and panel cutout dimensions
2. Meets IP67 in unmated condition, IP68 mated
3. HDMI Type A female port, front and back
4. Front panel mount only
5. Material and Finish
   - Shell, jam nut: see material finish table
   - Seals: silicone based elastomer
   - Hardware: stainless steel/passivated
6. HDMI:
   - Housing: thermoplastic/NA
   - Shell: copper alloy nickel plated
   - Terminal: copper alloy/gold plated
7. HDMI performance: design meets HDMI 2.0 protocol requirement including 18Gbps of bandwidth and suppots 4K resolution and 60Hz

© 2022 Glenair, Inc • 1211 Air Way, Glendale, CA 91201 • 818-247-6000 • www.glenair.com • U.S. CAGE code 06324 • SuperNine Catalog

Dimensions in Inches (millimeters) are subject to change without notice.

SuperNine® HDMI 2.0

MIL-DTL-38999 Series III Type

233-364 Panel mount receptacles with break-out board

DO - WALL MOUNT RECEPTACLE WITH ROUND THRU-HOLES

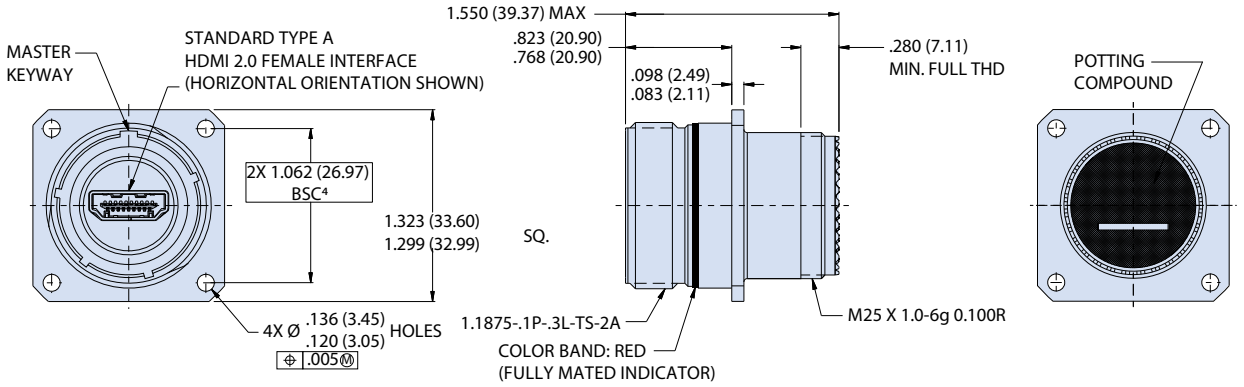

CM - WALL MOUNT RECEPTACLE WITH METRIC CLINCH NUTS

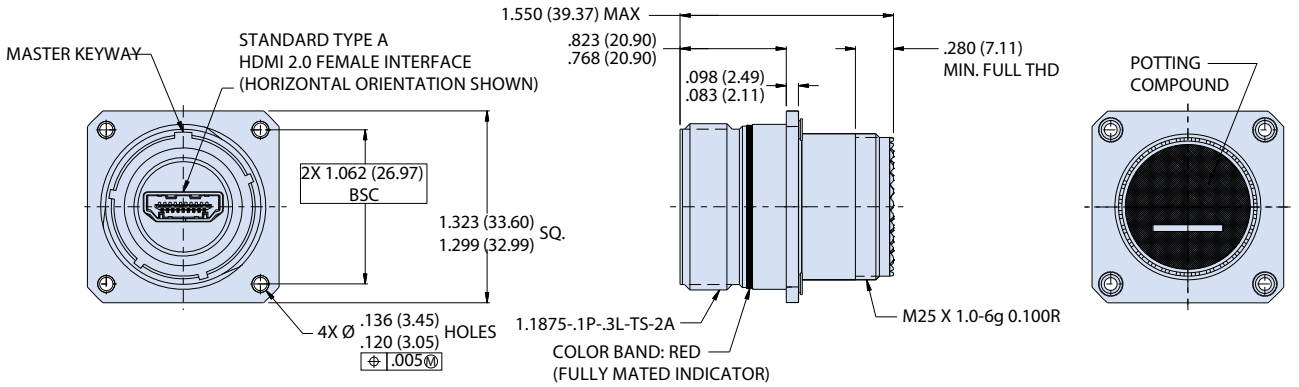

CS - WALL MOUNT RECEPTACLE WITH STANDARD CLINCH NUTS

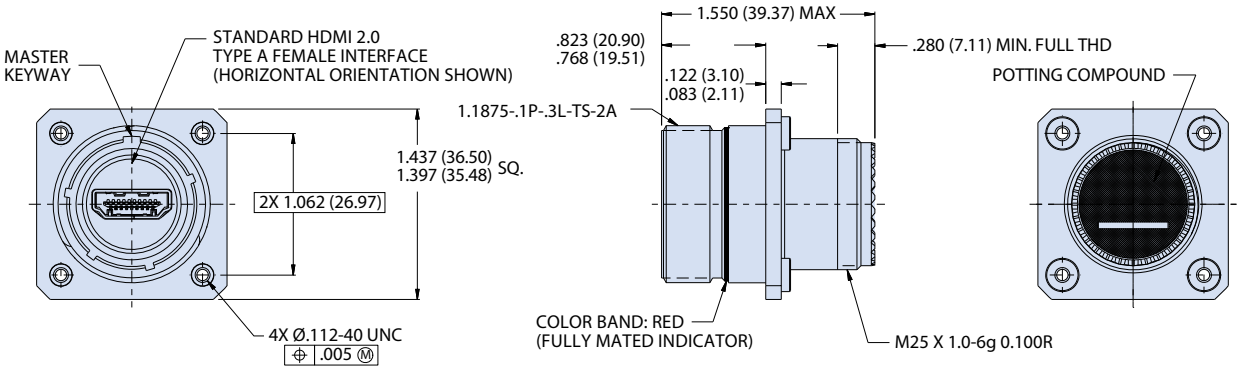

© 2022 Glenair, Inc • 1211 Air Way, Glendale, CA 91201 • 818-247-6000 • www.glenair.com • U.S. CAGE code 06324 • SuperNine Catalog
Dimensions in Inches (millimeters) are subject to change without notice.

SuperNine® HDMI 2.0

MIL-DTL-38999 Series III Type

233-364 Panel mount receptacles with break out board

07 - REAR PANEL MOUNT, JAM NUT RECEPTACLE

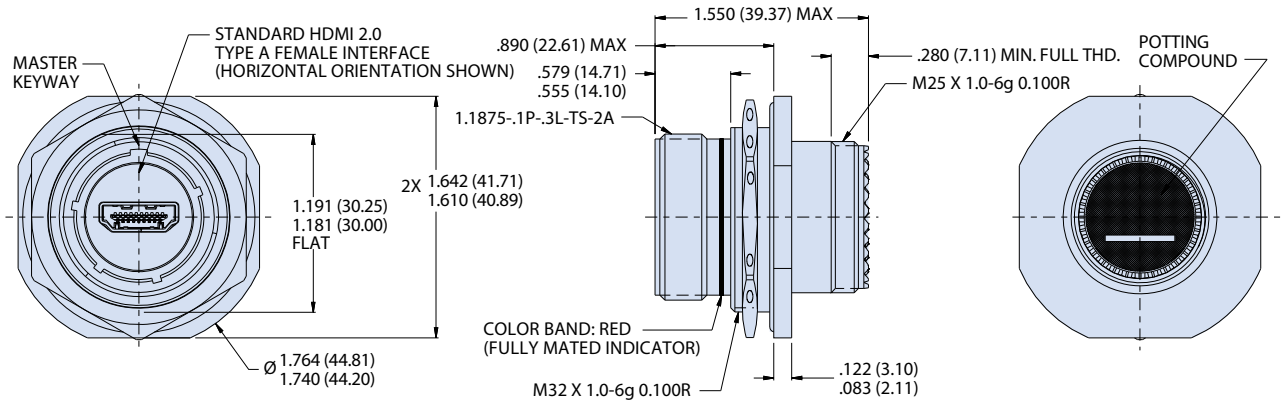

05 - CABLE RECEPTACLE

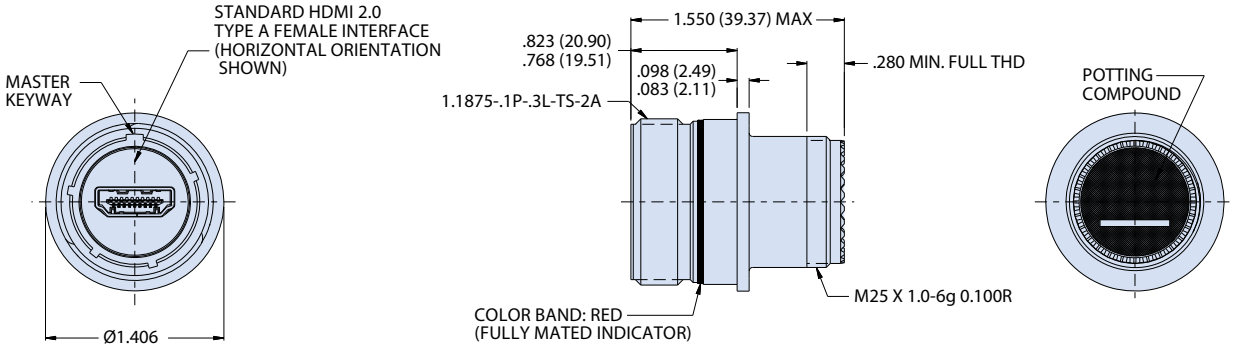

© 2022 Glenair, Inc • 1211 Air Way, Glendale, CA 91201 • 818-247-6000 • www.glenair.com • U.S. CAGE code 06324 • SuperNine Catalog
Dimensions in Inches (millimeters) are subject to change without notice.

ADVANCED PERFORMANCE

SuperNine® HDMI 2.0

MIL-DTL-38999 Series III Type

233-365 Panel mount feed-thru couplers



Part Number Development							
Sample Part Number	**233-365**	**NF**	**00**	**-17**	**N**	**H**	
Basic Number	**233-365**						
Finish	See Material and Finish table						
Connector Style[1]	See Connector Style table						
Shell Size	**17**						
Alternate Key Position[1]	**A**, **B**, **C**, **D**, **E**, **N** = Normal per MIL-DTL-38999						
HDMI Orientation	**H** = Horizontal **V** = Vertical						
Shrink Boot	**T** = Part No. 770-028 (Omit for None)						

Material and Finish	
NF	Aluminum/Cadmium, Olive Drab
ME	Aluminum/Electroless Nickel
MT	Alumimun/Nickel PTFE
ZR	Aluminum/Black Zinc-Nickel
AB	Marine Bronze
XM	Composite/Electroless Nickel

Additional material / finish options available consult factory

Connector Style	
00	Wall mount receptacle with slotted holes
D0	Wall mount receptacle with thru-holes
CM	Wall mount receptacle with metric clinch nuts
07	Rear panel mount, jam nut receptacle

All external dimensions, features, etc. compliant with D38999/20, /24, &/26. Consult factory for additional information.

HDMI 2 FEMALE ORIENTATION OPTIONS

(PARTIAL FRONT VIEWS SHOWN)

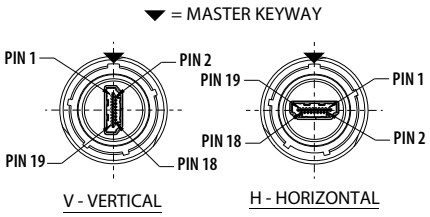

00 - REAR PANEL MOUNT WALL MOUNT FEED-THRU WITH SLOTTED THRU-HOLES

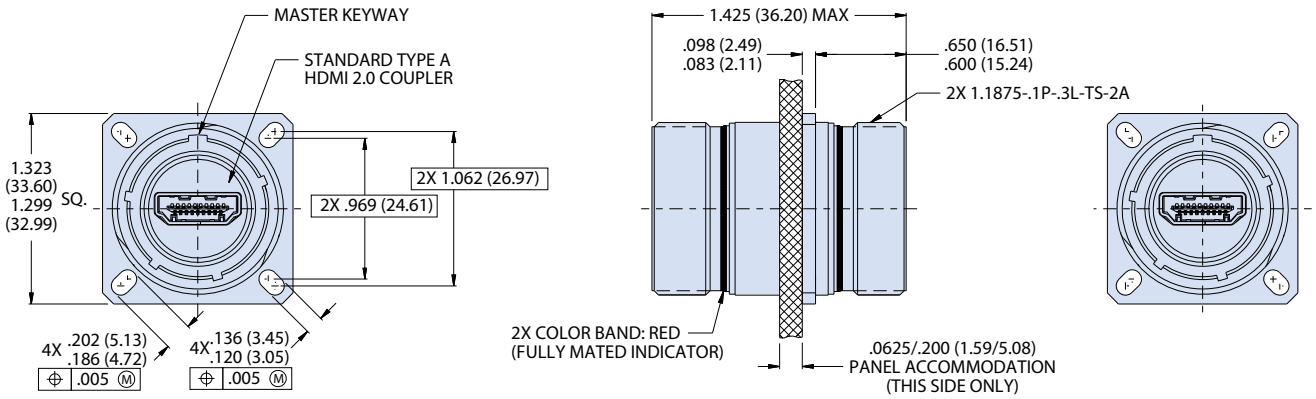

NOTES

1. See Section A for alternate key/keyway positions and panel cutout dimensions
2. Meets IP67 in unmated condition, IP68 mated
3. See assembly instructions AI233-368 for connector assembly, included with shipment
4. Material and Finish
   - Barrel, coupling nut: aluminum alloy (composite coupling nut no plating requied)
   - Insulators: high-grade rigid dieletric/ NA
   - Seals: silicone based elastomer
   - Hardware: stainless steel/passivated

© 2022 Glenair, Inc • 1211 Air Way, Glendale, CA 91201 • 818-247-6000 • www.glenair.com • U.S. CAGE code 06324 • SuperNine Catalog
Dimensions in Inches (millimeters) are subject to change without notice.

SuperNine® HDMI 2.0

MIL-DTL-38999 Series III Type

233-365 Panel mount feed-thru couplers

DO - REAR PANEL MOUNT WALL MOUNT RECEPTACLE WITH THRU-HOLES

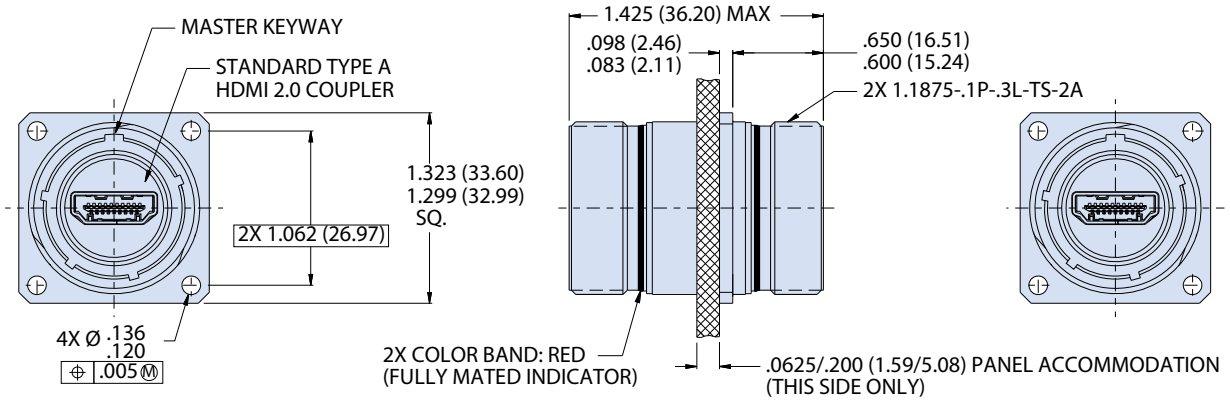

CM - REAR PANEL MOUNT WALL MOUNT RECEPTACLE WITH METRIC CLINCH NUTS

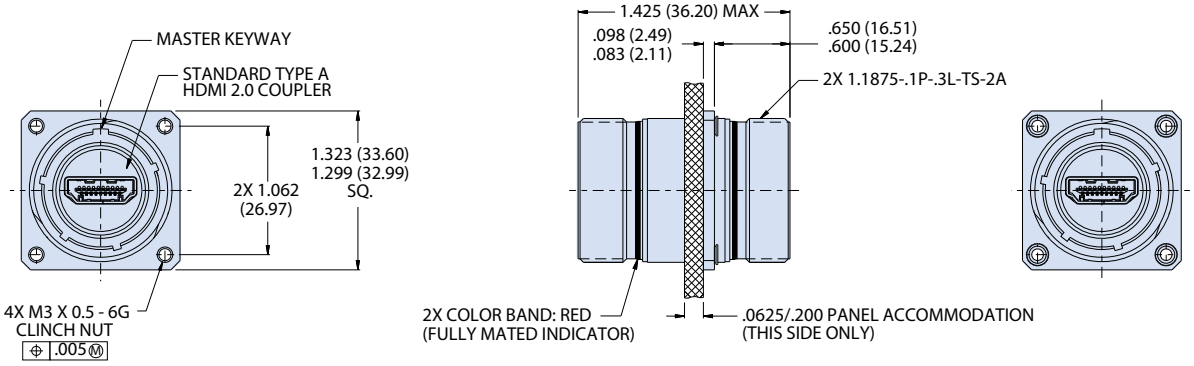

07 - JAM-NUT MOUNT RECEPTACLE

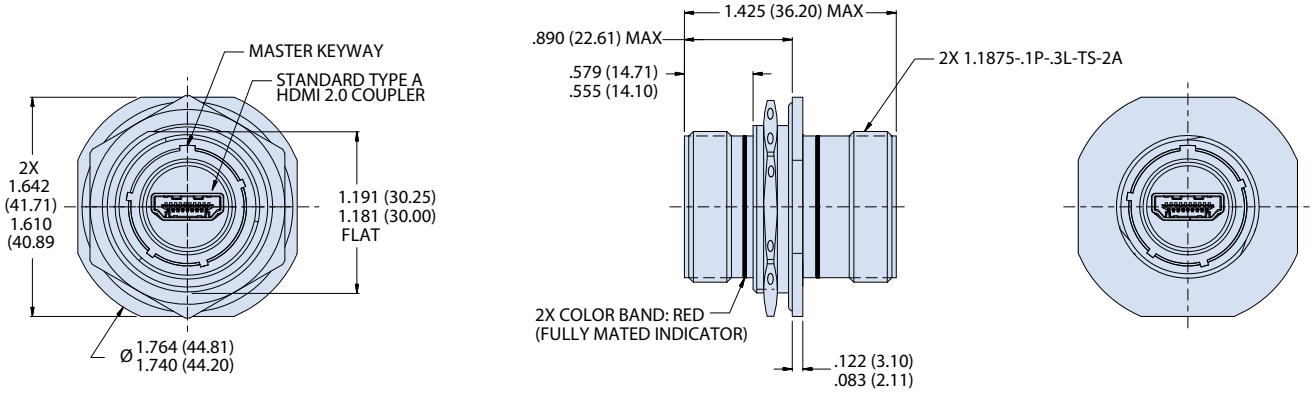

© 2022 Glenair, Inc • 1211 Air Way, Glendale, CA 91201 • 818-247-6000 • www.glenair.com • U.S. CAGE code 06324 • SuperNine Catalog
Dimensions in Inches (millimeters) are subject to change without notice.

ADVANCED PERFORMANCE

SuperNine® HDMI 2.0

MIL-DTL-38999 Series III Type

233-368 Plug, accepts HDMI Plug



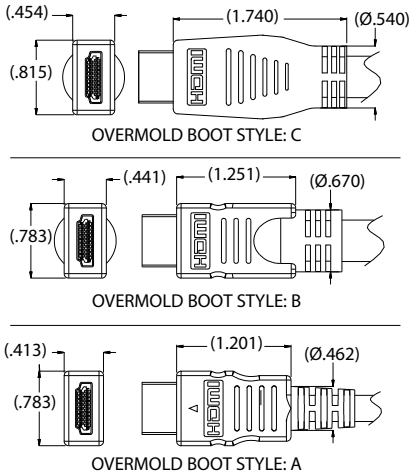

Part Number Development							
Sample Part Number	**233-368**	**NF**	**G6**	**A**	**17**	**N**	**H**
Basic Number	**233-368**						
Finish	See Material and Finish table						
Connector Style[1]	**G6** = Plug						
Overmold Style	**A**, **B**, **C**						
Shell Size	**17**						
Alternate Key Position[1]	**A**, **B**, **C**, **D**, **E**, **N** = Normal per MIL-DTL-38999						
HDMI Orientation	**H** = Horizaontal **V** = Vertical						

Material and Finish	
NF	Aluminum/Cadmium, Olive Drab (500 hour salt spray)
ME	Aluminum/Electroless Nickel
MT	Alumimun/Nickel PTFE
ZR	Aluminum/Black Zinc-Nickel (Tri-valent CR)
AB	Marine Bronze
XM	Composite/Electroless Nickel

Additional material / finish options available consult factory

All external dimensions, features, etc. compliant with D38999/20, /24, &/26. Consult factory for additional information.

HDMI 2 FEMALE ORIENTATION OPTIONS

(PARTIAL FRONT VIEWS SHOWN)

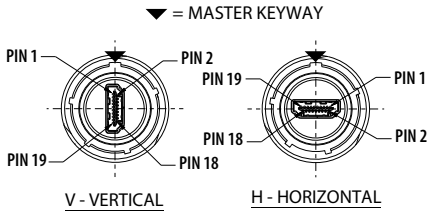

G6 - PLUG

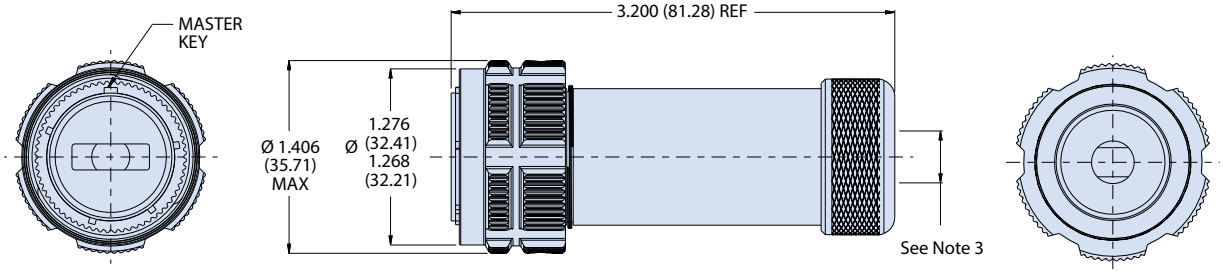

NOTES

1. See Section A for alternate key/keyway positions and panel cutout dimensions
2. Meets IP67 in unmated condition, IP68 mated
3. Design accommodates cable outside diameter .280 (7.112) nominal
4. Accommodates HDMI patch cords with standard plug interface
5. Material and Finish
   - Shell, jam nut: see material finish table
   - Seals: silicone based elastomer
   - Hardware: stainless steel/passivated
6. HDMI:
   - Housing: thermoplastic/NA
   - Shell: copper alloy nickel plated
   - Terminal: copper alloy/gold plated

© 2022 Glenair, Inc • 1211 Air Way, Glendale, CA 91201 • 818-247-6000 • www.glenair.com • U.S. CAGE code 06324 • SuperNine Catalog
Dimensions in Inches (millimeters) are subject to change without notice.

SuperNine® HDMI 2.0

MIL-DTL-38999 Series III Type

2330-0455 Cable assembly with commercial HDMI 2.0

Part Number Development							
Sample Part Number	**2330-0455**	**M**	**07**	**-17**	**N**	**H**	**-X**
Series / Basic Part No.	**2330-0455**						
P1 Material/Finish	**NF** = Aluminum/cadmium olive drab **ME** = Aluminum/electroless nickel **MT** = Aluminum/nickel PTFE **ZR** = Aluminum/zinc-nickel						
P1 Connector Style	**00** = Wall mount receptacle with slotted holes **D0** = Wall mount receptacle with round holes **07** = Jam-nut receptacle **G6** = Plug						
Shell Size	**17**						
Alternate Polarization	**A**, **B**, **C**, **D**, **E**, **N** = Normal; Per MIL-DTL-38999						
HDMI Orientation	**H** = Horizontal **V** = Vertical						
Overall Length	Provided in 1 foot increments; 01 - 1.0 ft						

00 - Wall Mount Receptacle With Slotted Holes

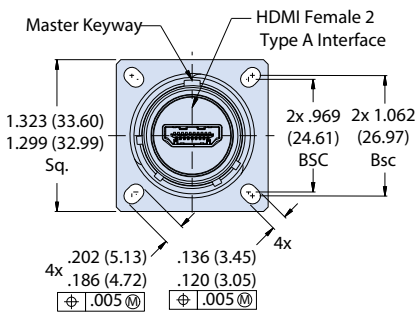

(Horizontal Orientation Shown)

D0 - Wall Mount Receptacle With Round Holes

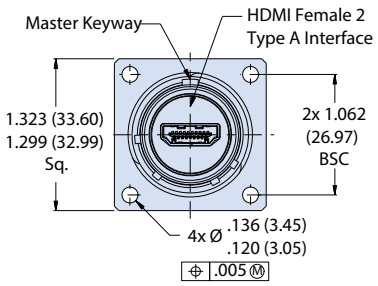

(Horizontal Orientation Shown)

07 - Jam Nut Receptacle

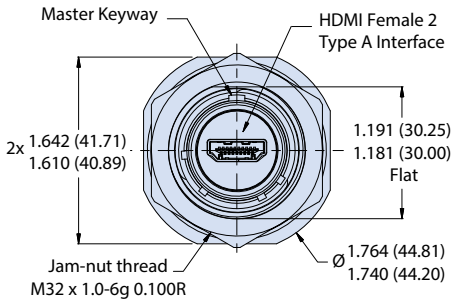

(Horizontal Orientation Shown)

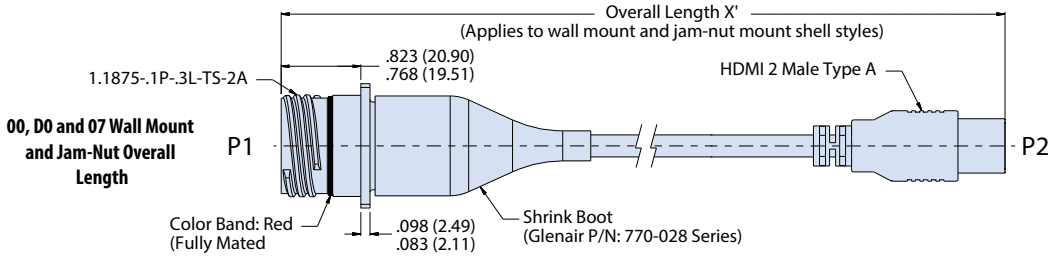

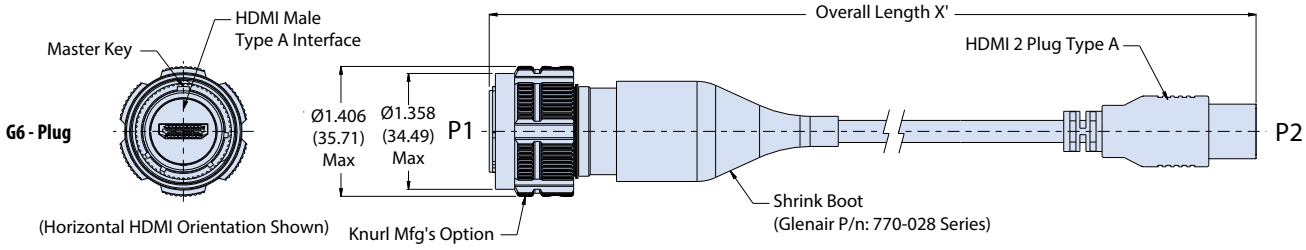

(Horizontal HDMI Orientation Shown)

© 2022 Glenair, Inc • 1211 Air Way, Glendale, CA 91201 • 818-247-6000 • www.glenair.com • U.S. CAGE code 06324 • SuperNine Catalog
Dimensions in Inches (millimeters) are subject to change without notice.

SuperNine® HDMI 2.0

MIL-DTL-38999 Series III Type

2330-0455 Cable assembly with HDMI 2

Recommended Mounting Holes & Cut Outs

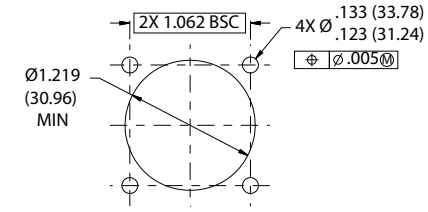

Back Panel Wall Mount Receptacle

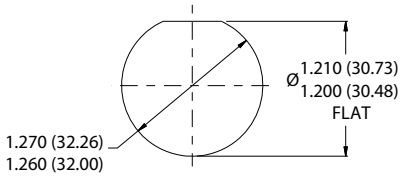

Jam Nut Receptacle

HDMI 2, Connector Pin Assignments			
Pin	Signal	Pin	Signal
1	TMDS DATA2+	11	TMDS CLOCK SHIELD
2	TMDS DATA2 SHIELD	12	TMDS CLOCK-
3	TMDS DATA2-	13	CEC
4	TMDS DATA1+	14	UTILITY
5	TMDS DATA1 SHIELD	15	SCL
6	TMDS DATA1-	16	SDA
7	TMDS DATA0+	17	DDC/CEC GROUND
8	TMDS DATA0 SHIELD	18	+5V POWER
9	TMDS DATA0-	19	HOT PLUG DETECT
10	TMDS CLOCK+		

NOTES

1. Material/finish
   - Shell, jam-nut, barrel: see part number development
   - Insulators: high grade rigid dielectric/N.A.
   - Contacts: copper alloy, gold plated
   - Seals: silicone based elastomer
   - HDMI (shell/contacts): copper alloy
   - Dielectric: thermoplastic PA9T UL94V-0
   - Hardware: stainless steel/passivated
2. HDMI specifications:
   Performance:
   - HDMI 2

   Electrical:
   - Current rating: 0.5 amps min
   - DWV: 300 Vac
   - I.R.: 100 Meg Ohms min.
   - Operating temperature range: -20°C to +85°C
3. Connector interface (P1) per MIL-DTL-38999, Series III, Shell size 17
4. Connector front interface with HDMI Type A male is designed to mate with HDMI receptacle patch cord or Glenair HDMI receptacle connector 2330-0441

   Connector front interface with HDMI Type A female is designed to mate with HDMI male patch cord

HDMI 2 ORIENTATION OPTIONS (PARTIAL FRONT VIEWS SHOWN)

Receptacle

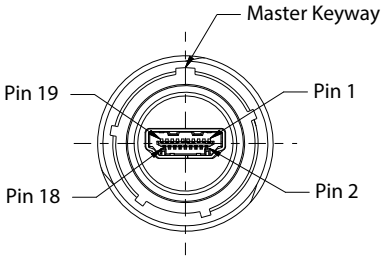

Horizontal

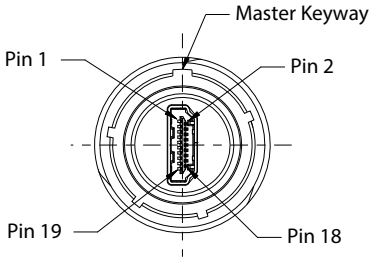

Vertical

Plug

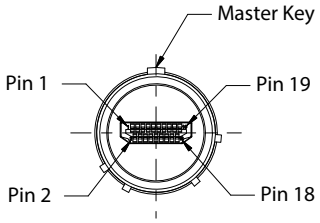

Horizontal

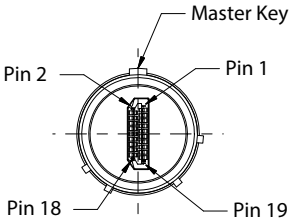

Vertical

© 2022 Glenair, Inc • 1211 Air Way, Glendale, CA 91201 • 818-247-6000 • www.glenair.com • U.S. CAGE code 06324 • SuperNine Catalog
Dimensions in Inches (millimeters) are subject to change without notice.

ADVANCED PERFORMANCE

SuperNine® EMI/RFI filter

MIL-DTL-38999 Series III Type connectors

Product Selection Guide

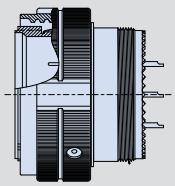

240-383P F-8

EMI/RFI Filter Plug

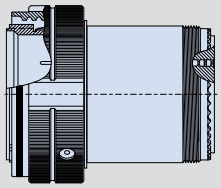

240-383Q F-10

EMI/RFI Filter Plug with Crimp Removable Contacts

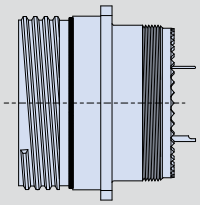

240-383W F-12

EMI/RFI Filter Wall Mount Receptacle with solder cup or PC tail termination

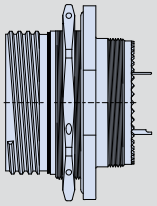

240-383J F-14

EMI/RFI Filter Jam Nut Receptacle with solder cup or PC tail termination

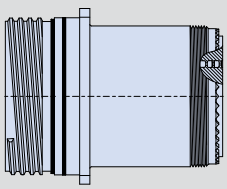

240-383R F-16

EMI/RFI Filter Wall Mount Receptacle with Crimp Removable Contacts

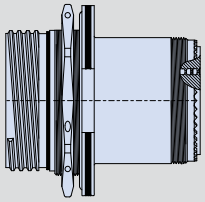

240-383S F-18

EMI/RFI Filter Jam Nut Receptacle with Crimp Removable Contacts

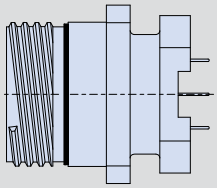

240-383D F-20

EMI/RFI Filter Dual Flange Wall Mount Receptacle with PC Tails and threaded standoff

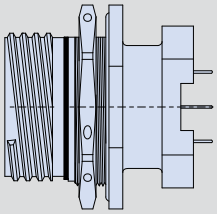

240-383E F-22

EMI/RFI Filter Dual Flange Jam Nut Receptacle with PC Tails and threaded standoff

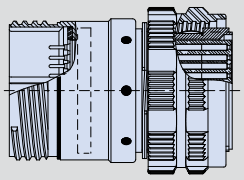

240-383B F-24

EMI/RFI Filter Adapter

© 2022 Glenair, Inc • 1211 Air Way, Glendale, CA 91201 • 818-247-6000 • www.glenair.com • U.S. CAGE code 06324 • SuperNine® Catalog
Dimensions in Inches (millimeters) are subject to change without notice.

SuperNine® EMI/RFI filter

MIL-DTL-38999 Series III Type connectors

Summary of material and panel cut-outs

SUMMARY OF MATERIALS AND SPECIFICATIONS (see performance spec for complete information)

Notes

- Insert arrangement in accordance with MIL-STD-1560. Arrangement shown for reference only.
- EMI circular filter receptacle connectors designed to meet requirements of MIL-STD-2120 and MIL-DTL-38999, Series III.
- All contacts to have identical filter value. Other filter arrangements available, contact factory.
- Other filter styles (C-L, L-C, Unbalanced Pi, Multi-Stage, Multi-Value) are available, please consult the factory.

Electrical Ratings:

- DWV- 500 VDC
- Standard operating voltage 200 VDC (Filter class X, Y and Z are 250 VDC)

Insulation Resistance:

- 5000 MegOhms Min. at 200 VDC.

Operating Temperature:

- -55°C to +125°C

Materials/Finishes:

- Shells, barrel, coupling nut, jam nut: see connector class
- Insulators: high grade rigid dielectric/ N.A.
- Seals: fluorosilicone
- Contacts: copper alloy 50µ" gold over 50µ" Nickel

PANEL CUT-OUT DIMENSIONS

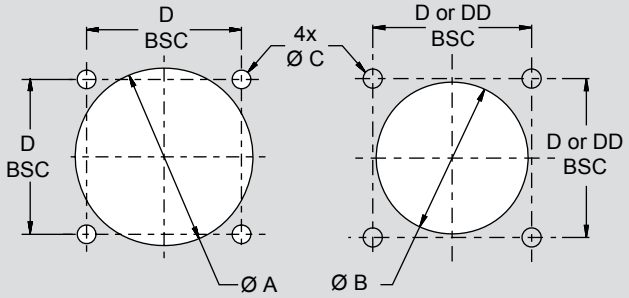

Wall Mount
Back Panel Mount

Wall Mount
Front Panel Mount

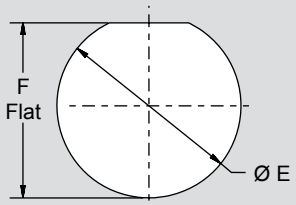

Jam Nut

Square Flange Panel Cut-Outs MIL-DTL-38999 Series III					
Shell Size	Ø A Min Back Panel	Ø B Min Front Panel	Ø C Holes	D BSC	DD BSC
9	.656 (16.7)	.516 (13.1)	.133 (3.4) .123 (3.1)	.719 (18.3)	.594 (15.09)
11	.796 (20.2)	.625 (15.9)		.812 (20.6)	.719 (18.3)
13	.922 (23.4)	.750 (19.1)		.906 (23.0)	.812 (20.6)
15	1.047 (26.6)	.906 (23.0)		.969 (24.6)	.906 (23.0)
17	1.219 (31.0)	1.016 (25.8)		1.062 (27.0)	.969 (24.6)
19	1.297 (32.9)	1.141 (29.0)		1.156 (29.4)	1.062 (27.0)
21	1.422 (36.1)	1.266 (32.2)		1.250 (31.8)	1.156 (29.4)
23	1.547 (39.3)	1.375 (34.9)	.159 (4.0) .149 (3.8)	1.375 (34.9)	1.250 (31.8)
25	1.672 (42.5)	1.484 (37.7)	.155 (3.9) .145 (3.7)	1.500 (38.1)	1.375 (34.9)

Jam Nut Panel Cut-Out MIL-DTL-38999 Series III		
Shell Size	Ø E	F Flat
9	.710 (18.0) .700 (17.8)	.670 (17.0) .660 (16.8)
11	.835 (21.2) .825 (21.0)	.771 (19.6) .761 (19.3)
13	1.020 (25.9) 1.010 (25.7)	.955 (24.3) .945 (24.0)
15	1.145 (29.1) 1.135 (28.8)	1.085 (27.6) 1.075 (27.3)
17	1.270 (32.3) 1.260 (32.0)	1.210 (30.7) 1.200 (30.5)
19	1.395 (35.4) 1.385 (35.2)	1.335 (33.9) 1.325 (33.7)
21	1.520 (38.6) 1.510 (38.4)	1.460 (37.1) 1.450 (36.8)
23	1.645 (41.8) 1.635 (41.5)	1.585 (40.3) 1.575 (40.0)
25	1.770 (45.0) 1.760 (44.7)	1.710 (43.4) 1.700 (43.2)

© 2022 Glenair, Inc • 1211 Air Way, Glendale, CA 91201 • 818-247-6000 • www.glenair.com • U.S. CAGE code 06324 • SuperNine® Catalog
Dimensions in Inches (millimeters) are subject to change without notice.

SuperNine® EMI/RFI filter

MIL-DTL-38999 Series III Type connectors

Alternate keying positions

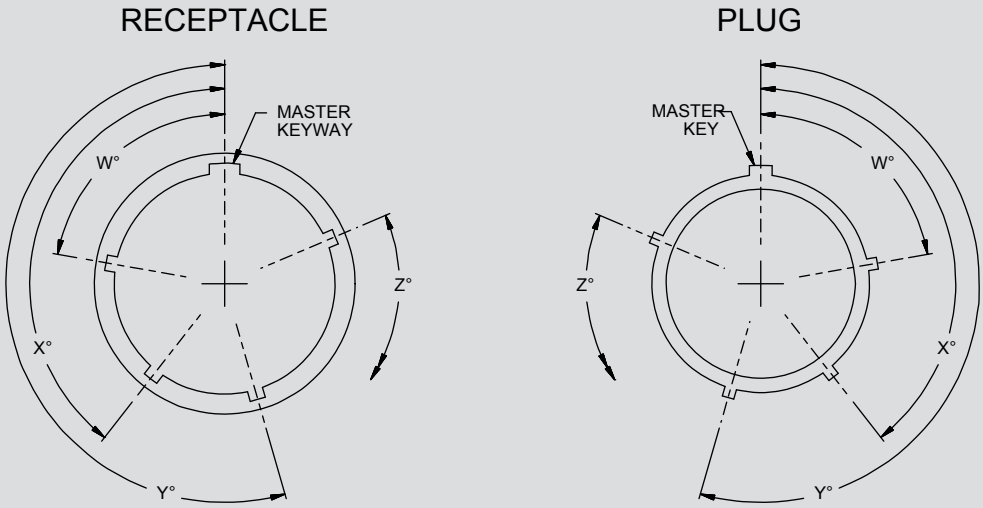

NOTE: ALL MINOR KEYS AND KEYWAYS ARE ROTATED TO PROVIDE POLARIZATION WHILE MASTER KEY AND KEYWAY REMAIN FIXED.

MIL-DTL-38999 Series III Keying Positions					
Shell Size	Keying Position	W° BSC	X° BSC	Y° BSC	Z° BSC
9	N	105°	140°	215°	265°
	A	102°	132°	248°	320°
	B	80°	118°	230°	312°
	C	35°	140°	205°	275°
	D	64°	155°	234°	304°
	E	91°	131°	197°	240°
11 13 15	N	95°	141°	208°	236°
	A	113°	156°	182°	292°
	B	90°	145°	195°	252°
	C	53°	156°	220°	255°
	D	119°	146°	176°	298°
	E	51°	141°	184°	242°
17 19 21 23 25	N	80°	142°	196°	293°
	A	135°	170°	200°	310°
	B	49°	169°	200°	244°
	C	66°	140°	200°	257°
	D	62°	145°	180°	280°
	E	79°	153°	197°	272°

© 2022 Glenair, Inc • 1211 Air Way, Glendale, CA 91201 • 818-247-6000 • www.glenair.com • U.S. CAGE code 06324 • SuperNine® Catalog
Dimensions in Inches (millimeters) are subject to change without notice.

SuperNine® EMI/RFI filter

MIL-DTL-38999 Series III Type connectors

Compliance Matrix

MIL-DTL-38999, Table XII, Group 2	Paragraph MIL-DTL-38999		3 Samples	
TEST OR INSPECTION	REQUIREMENT	TEST METHOD	TEST REQUIRED?	TEST REPORT
Visual and Mechanical Inspection	3.1, 3.3, 3.4, 3.5, 3.52 and 3.53	4.5.1	YES	STANDARD TEST
Gauge Location	3.22	4.5.18	NO	NOT REQUIRED. UUT HAS NON-REMOVABLE CONTACTS
Gauge Retention	3.23	4.5.19	NO	NOT REQUIRED. UUT HAS NON-REMOVABLE CONTACTS
Maintenance Aging	3.6	4.5.2	NO	NOT REQUIRED. UUT HAS NON-REMOVABLE CONTACTS
Contact Retention	3.24	4.5.20.1	NO	NOT REQUIRED. UUT HAS NON-REMOVABLE CONTACTS
Altitude-low temperature	3.25	4.5.21	YES	OC22756-0616284 Altitude Low Temperature (247-245)
Insulation resistance at ambient temperature	N/A	N/A	YES	OC22756-0616284 Altitude Low Temperature (247-245)
Dielectric withstanding voltage at sea level	N/A	N/A	YES	OC22756-0616284 Altitude Low Temperature (247-245)
Capacitance between contacts	N/A	N/A	YES	Capacitance Between Contacts - Before Vibration (247-245)
				Capacitance Between Contact - After Vibration (247-245)
Capacitance matching	N/A	N/A	YES	Capacitance Matching - Before Vibration (247-245)
				Capacitance Matching - After Vibration (247-245)
Insertion loss at minimum temperature	N/A	N/A	YES	Insertion Loss At Min Temperature (247-245)
Insertion loss at maximum temperature	N/A	N/A	YES	Insertion Loss At Max Temperature (247-245)
Insertion loss for feed thru contacts	N/A	N/A	YES	Insertion Loss At Room Temperature (247-245)
Cross talk isolation	N/A	N/A	YES	Crosstalk Isolation (247-245)
Temperature Shock (380 Cycles)	#N/A	#N/A	YES	380 Cycles Thermal Shock (247-245)
Air Leakage	N/A	N/A	YES	OC22817-0716312 Air Leakage (247-245)
Functional Test - Ground contact resistance to connector shell	N/A	N/A	NO	NOT REQUIRED. UUT DOES NOT HAVE GROUND CONTACTS.
Functional Test - Contact capacitance to ground	N/A	N/A	YES	380 CYCLES THERMAL SHOCK (247-245)
Functional Test - Dielectric withstanding voltage at sea level	N/A	N/A	YES	380 CYCLES THERMAL SHOCK (247-245)
Functional Test - Insulation resistance	N/A	N/A	YES	380 CYCLES THERMAL SHOCK (247-245)
Coupling Torque	3.11	4.5.7	YES	OC21361-0915309 Coupling Torque (247-245)
Insulation Resistance at elevated temperature	N/A	N/A	YES	Insulation Resistance at Temp (247-245)
Dielectric withstanding voltage at altitude	N/A	N/A	YES	OC21363-0915311 DWV at Altitude (247-245)
Dielectric withstanding voltage at sea level	N/A	N/A	YES	OC21363-0915311 DWV at Altitude (247-245)
Durability	3.12	4.5.8	YES	OC21364-0915312 Durability (247-245)
Accessory thread strength	3.26	4.5.22	NO	NOT REQUIRED. UUT DOES NOT HAVE ACCESSORY THREADS.
Vibration	3.27	4.5.23	YES	OC22773-0616282B Sine Vibration (247-245)
				OC21365-0915313 Random Vibration at Temp (247-245)
Shock	3.28	4.5.24.1	YES	OC21362-0915310 Shock (247-245)
Functional Test - Ground contact resistance to connector shell	N/A	N/A	NO	NOT REQUIRED. UUT DOES NOT HAVE GROUND CONTACTS.
Functional Test - Contact capacitance to ground	N/A	N/A	YES	OC21362-0915310 Shock (247-245)
Functional Test - Dielectric withstanding voltage at sea level	N/A	N/A	YES	OC21362-0915310 Shock (247-245)
Functional Test - Insulation resistance	N/A	N/A	YES	OC21362-0915310 Shock (247-245)
Shell-to-shell conductivity	3.29	4.5.25	YES	OC22635-0316173 Shell-to-Shell Conductivity (247-245)
High temperature exposure	3.38.2	4.5.34.2	YES	High Temperature Exposure (247-245)
Humidity	3.30	4.5.26	YES	OC21366-0915314 Humidity (247-245)
Insulation resistance at ambient temperature	N/A	N/A	YES	OC21366-0915314 Humidity (247-245)
Dielectric withstanding voltage at sea level	N/A	N/A	YES	OC21366-0915314 Humidity (247-245)
Functional Test - Ground contact resistance to connector shell	N/A	N/A	NO	NOT REQUIRED. UUT DOES NOT HAVE GROUND CONTACTS.
Functional Test - Contact capacitance to ground	N/A	N/A	YES	OC21366-0915314 Humidity (247-245)
Functional Test - Dielectric withstanding voltage at sea level	N/A	N/A	YES	OC21366-0915314 Humidity (247-245)

© 2022 Glenair, Inc • 1211 Air Way, Glendale, CA 91201 • 818-247-6000 • www.glenair.com • U.S. CAGE code 06324 • SuperNine® Catalog
Dimensions in Inches (millimeters) are subject to change without notice.

SuperNine® EMI/RFI filter

MIL-DTL-38999 Series III Type connectors

Compliance Matrix

Functional Test - Insulation resistance	N/A	N/A	YES	OC21366-0915314 Humidity (247-245)
Contact retention	3.24	4.5.20.1	NO	NOT REQUIRED. UUT HAS NON-REMOVABLE CONTACTS
Post test examination	3.52 and 3.53	4.5.49	YES	STANDARD TEST

MIL-DTL-38999, Table XII, Group 5	Paragraph MIL-DTL-38999		3 Samples	
TEST OR INSPECTION	REQUIREMENT	TEST METHOD	TEST REQUIRED?	TEST REPORT
Visual and Mechanical Inspection	3.1, 3.3, 3.4, 3.5, 3.52 and 3.53	4.5.1	YES	OC22772-0616281A Fluid Immersion (247-245)
Ozone exposure	3.33	4.5.29	NO	NOT REQUIRED. UUT WILL NOT BE EXPOSED TO OZONE.
Insulation resistance at ambient temperature	N/A	N/A	YES	OC22772-0616281A Fluid Immersion (247-245)
Dielectric withstanding voltage at sea level	N/A	N/A	YES	OC22772-0616281A Fluid Immersion (247-245)
Fluid immersion	3.34	4.5.30	YES	OC22772-0616281A Fluid Immersion (247-245)
Dielectric withstanding voltage at sea level	N/A	N/A	YES	OC22772-0616281A Fluid Immersion (247-245)
Coupling torque	3.11	4.5.7	YES	OC22772-0616281A Fluid Immersion (247-245)
Functional Test - Ground contact resistance to connector shell	N/A	N/A	NO	NOT REQUIRED. UUT DOES NOT HAVE GROUND CONTACTS.
Functional Test - Contact capacitance to ground	N/A	N/A	YES	OC22772-0616281A Fluid Immersion (247-245)
Functional Test - Dielectric withstanding voltage at sea level	N/A	N/A	YES	OC22772-0616281A Fluid Immersion (247-245)
Functional Test - Insulation resistance	N/A	N/A	YES	OC22772-0616281A Fluid Immersion (247-245)
Post test examination	3.52 and 3.53	4.5.49	YES	OC22772-0616281A Fluid Immersion (247-245)

MIL-DTL-38999, Table XII, Group 9	Paragraph MIL-DTL-38999		3 Samples	
TEST OR INSPECTION	REQUIREMENT	TEST METHOD	TEST REQUIRED?	TEST REPORT
Visual and Mechanical Inspection	3.1, 3.3, 3.4, 3.5, 3.52 and 3.53	4.5.1	YES	OC22865-0716347A Salt Spray (247-245)
Shock (high impact)	3.28	4.5.24.2	NO	OC21209-0915355 Hi-Impact Shock (247-463)
Dielectric withstanding voltage at sea level	N/A	N/A	YES	OC22865-0716347A Salt Spray (247-245)
Electrolytic erosion	3.39	4.5.35	YES	OC22865-0716347A Salt Spray (247-245)
Shell-to-shell conductivity	3.29	4.5.25	YES	OC22865-0716347A Salt Spray (247-245)
Temperature cycling	N/A	N/A	NO	NOT REQUIRED.
Salt spray (corrosion)	3.17	4.5.13.2	YES	OC22865-0716347A Salt Spray (247-245)
Functional Test - Ground contact resistance to connector shell	N/A	N/A	NO	NOT REQUIRED. UUT DOES NOT HAVE GROUND CONTACTS.
Functional Test - Contact capacitance to ground	N/A	N/A	YES	OC22865-0716347A Salt Spray (247-245)
Functional Test - Dielectric withstanding voltage at sea level	N/A	N/A	YES	OC22865-0716347A Salt Spray (247-245)
Functional Test - Insulation resistance	N/A	N/A	YES	OC22865-0716347A Salt Spray (247-245)
Coupling torque	3.11	4.5.7	YES	OC22865-0716347A Salt Spray (247-245)
Shell-to-shell conductivity	3.29	4.5.25	YES	OC22865-0716347A Salt Spray (247-245)
Coupling pin strength	3.21	4.5.17	NO	NOT REQUIRED. UUT IS A SERIES III TYPE CONNECTOR.
Post test examination	3.52 and 3.53	4.5.49	YES	OC22865-0716347A Salt Spray (247-245)

MIL-DTL-38999, Table XII, Group 10	Paragraph MIL-DTL-38999		2 Samples	
TEST OR INSPECTION	REQUIREMENT	TEST METHOD	TEST REQUIRED?	TEST REPORT
Visual and Mechanical Inspection	3.1, 3.3, 3.4, 3.5, 3.52 and 3.53	4.5.1	NO	NOT REQUIRED. UUT IS NOT A FIREWALL CLASS CONNECTOR.
Firewall	3.40	4.5.36	NO	NOT REQUIRED. UUT IS NOT A FIREWALL CLASS CONNECTOR.
Post test examination	3.52 and 3.53	4.5.49	NO	NOT REQUIRED. UUT IS NOT A FIREWALL CLASS CONNECTOR.

© 2022 Glenair, Inc • 1211 Air Way, Glendale, CA 91201 • 818-247-6000 • www.glenair.com • U.S. CAGE code 06324 • SuperNine® Catalog
Dimensions in Inches (millimeters) are subject to change without notice.

SuperNine® EMI/RFI filter

MIL-DTL-38999 Series III Type connectors

Complaince Matrix

MIL-DTL-38999, Table XII, Group 11	Paragraph MIL-DTL-38999		3 Samples	
TEST OR INSPECTION	REQUIREMENT	TEST METHOD	TEST REQUIRED?	TEST REPORT
Visual and Mechanical Inspection	3.1, 3.3, 3.4, 3.5, 3.52 and 3.53	4.5.1	YES	OC22641-0516246 Ice & Dust (247-245)
Ice resistance	3.44	4.5.40	YES	OC22641-0516246 Ice & Dust (247-245)
Dust (fine sand)	3.45	4.5.41	YES	OC22641-0516246 Ice & Dust (247-245)
Impact (classes J and M)	3.49	4.5.45	NO	NOT REQUIRED. UUT IS NOT A CLASS J OR M CONNECTOR.
Functional Test - Ground contact resistance to connector shell	N/A	N/A	NO	NOT REQUIRED. UUT DOES NOT HAVE GROUND CONTACTS.
Functional Test - Contact capacitance to ground	N/A	N/A	YES	OC22641-0516246 Ice & Dust (247-245)
Functional Test - Dielectric withstanding voltage at sea level	N/A	N/A	YES	OC22641-0516246 Ice & Dust (247-245)
Functional Test - Insulation resistance	N/A	N/A	YES	OC22641-0516246 Ice & Dust (247-245)
Post test examination	3.52 and 3.53	4.5.49	YES	OC22641-0516246 Ice & Dust (247-245)

MIL-DTL-38999, Table XII, Group 13	Paragraph MIL-DTL-38999		2 Samples	
TEST OR INSPECTION	REQUIREMENT	TEST METHOD	TEST REQUIRED?	TEST REPORT
Visual and Mechanical Inspection	3.1, 3.3, 3.4, 3.5, 3.52 and 3.53	4.5.1	NO	NOT REQUIRED. UUT IS NOT A CLASS J OR M CONNECTOR.
Hydrolytic stability (classes J and M)	3.47	4.5.43	NO	NOT REQUIRED. UUT IS NOT A CLASS J OR M CONNECTOR.
Post test examination	3.52 and 3.53	4.5.49	NO	NOT REQUIRED. UUT IS NOT A CLASS J OR M CONNECTOR.

MIL-DTL-38999, Table XII, Group 14	Paragraph MIL-DTL-38999		2 Samples	
TEST OR INSPECTION	REQUIREMENT	TEST METHOD	TEST REQUIRED?	TEST REPORT
Visual and Mechanical Inspection	3.1, 3.3, 3.4, 3.5, 3.52 and 3.53	4.5.1	NO	NOT REQUIRED. UUT DOES NOT HAVE ACCESSORY THREADS.
Coupling torque	3.11	4.5.7	NO	NOT REQUIRED. UUT DOES NOT HAVE ACCESSORY THREADS.
Backshell shield braid-to-shell conductivity	3.29.1	4.5.25.1	NO	NOT REQUIRED. UUT DOES NOT HAVE ACCESSORY THREADS.
Resistance to indirect lightning strike	3.51	4.5.47	NO	NOT REQUIRED. UUT DOES NOT HAVE ACCESSORY THREADS.
Backshell shield braid-to-shell conductivity	3.29.1	4.5.25.1	NO	NOT REQUIRED. UUT DOES NOT HAVE ACCESSORY THREADS.
Coupling torque	3.11	4.5.7	NO	NOT REQUIRED. UUT DOES NOT HAVE ACCESSORY THREADS.
Insulation resistance at ambient temperature	N/A	N/A	NO	NOT REQUIRED. UUT DOES NOT HAVE ACCESSORY THREADS.
Dielectric withstanding voltage at sea level	N/A	N/A	NO	NOT REQUIRED. UUT DOES NOT HAVE ACCESSORY THREADS.
Post test examination	3.52 and 3.53	4.5.49	NO	NOT REQUIRED. UUT DOES NOT HAVE ACCESSORY THREADS.

Lightning Transient Test Group	Paragraph MIL-DTL-38999		2 Samples	
TEST OR INSPECTION	REQUIREMENT	TEST METHOD	TEST REQUIRED?	TEST REPORT
Lightning transient test	N/A	N/A	YES	TR056503 Lightning (247-245)
Functional Test - Ground contact resistance to connector shell	N/A	N/A	NO	NOT REQUIRED. UUT DOES NOT HAVE GROUND CONTACTS.
Functional Test - Contact capacitance to ground	N/A	N/A	YES	TR056503 Lightning (247-245)
Functional Test - Dielectric withstanding voltage at sea level	N/A	N/A	YES	TR056503 Lightning (247-245)
Functional Test - Insulation resistance	N/A	N/A	YES	TR056503 Lightning (247-245)

© 2022 Glenair, Inc • 1211 Air Way, Glendale, CA 91201 • 818-247-6000 • www.glenair.com • U.S. CAGE code 06324 • SuperNine® Catalog
Dimensions in Inches (millimeters) are subject to change without notice.

SuperNine® EMI/RFI filter

MIL-DTL-38999 Series III Type connectors

Complaince Matrix

Rapid Decompression And Explosion Proofness Test Group	Paragraph MIL-DTL-38999		2 Samples	
TEST OR INSPECTION	REQUIREMENT	TEST METHOD	TEST REQUIRED?	TEST REPORT
Rapid decompression	N/A	N/A	YES	OC22757-0616266 Rapid Decompression (247-245)
Explosion Proofness	N/A	N/A	NO	NOT REQUIRED. UUT DOES NOT HAVE ACTIVE COMPONENTS.
Functional Test - Ground contact resistance to connector shell	N/A	N/A	NO	NOT REQUIRED. UUT DOES NOT HAVE GROUND CONTACTS.
Functional Test - Contact capacitance to ground	N/A	N/A	YES	OC22757-0616266 Rapid Decompression (247-245)
Functional Test - Dielectric withstanding voltage at sea level	N/A	N/A	YES	OC22757-0616266 Rapid Decompression (247-245)
Functional Test - Insulation resistance	N/A	N/A	YES	OC22757-0616266 Rapid Decompression (247-245)

Filter Life Test Group	Paragraph MIL-DTL-38999		2 Samples	
TEST OR INSPECTION	REQUIREMENT	TEST METHOD	TEST REQUIRED?	TEST REPORT
Filter life	N/A	N/A	YES	1000 Hour Life Test (247-075)
Functional Test - Ground contact resistance to connector shell	N/A	N/A	NO	NOT REQUIRED. UUT DOES NOT HAVE GROUND CONTACTS.
Functional Test - Contact capacitance to ground	N/A	N/A	YES	1000 Hour Life Test (247-075)
Functional Test - Dielectric withstanding voltage at sea level	N/A	N/A	YES	1000 Hour Life Test (247-075)
Functional Test - Insulation resistance	N/A	N/A	YES	1000 Hour Life Test (247-075)

© 2022 Glenair, Inc • 1211 Air Way, Glendale, CA 91201 • 818-247-6000 • www.glenair.com • U.S. CAGE code 06324 • SuperNine® Catalog
Dimensions in Inches (millimeters) are subject to change without notice.

SuperNine® EMI/RFI filter

MIL-DTL-38999 Series III Type connectors

240-383P Plug connector with solder cup contacts

SUPERNINE EMI/RFI FILTER PLUG

Part Nmber Development										
Sample Part Number	**240-383**	**P**	**ME**	**15-35**	**P**	**S**	**P**	**A**	**N**	**N**
Filter Connector	MIL-DTL-38999 Series III Type									
Shell Style	**P** = Plug									
Connector Class	See Connector Class Table									
Insert Arrangement*	IAW MIL-STD-1560.									
Contact Gender	**P** = Pin **S** = Socket									
Termination	**S** = Solder Cup									
Filter Type	**P** = Pi Circuit **C** = C Circuit (See Note 1)									
Capacitance	See Capacitor Array Code Table									
Flange Mounting Style	**N** = Not Applicable									
Alternate Key Position*	**A**, **B**, **C**, **D**, **E**, **N** = Normal									

*Refer to Section A for complete details

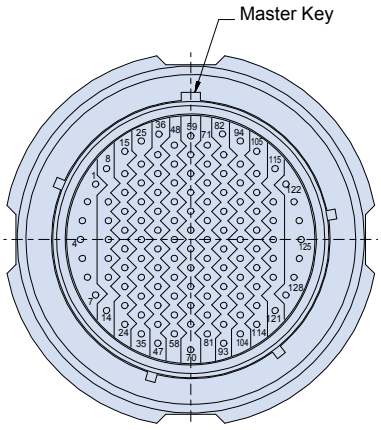

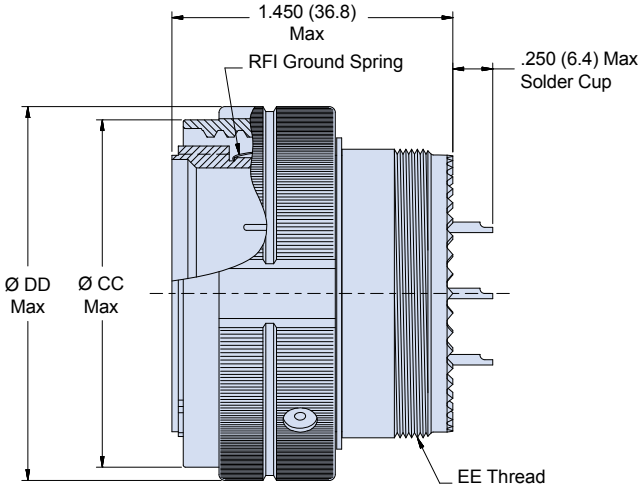

NOTES

1. Other filter styles (C-L, L-C, Unbalanced Pi, Multi-Stage, Multi-Value) are available, please consult the factory.

© 2022 Glenair, Inc • 1211 Air Way, Glendale, CA 91201 • 818-247-6000 • www.glenair.com • U.S. CAGE code 06324 • SuperNine® Catalog
Dimensions in Inches (millimeters) are subject to change without notice.

SuperNine® EMI/RFI filter

MIL-DTL-38999 Series III Type connectors

240-383P Plug connector with solder cup contacts

Connector Class			
Sym	**Class**	**Material**	**Finish Description**
ME	Environmental	Aluminum	Electroless Nickel
MT	Environmental	Aluminum	Ni-PTFE *1000 Hour Grey*™ Nickel Fluorocarbon Polymer
NF	Environmental	Aluminum	Cadmium O.D. Over Electroless Nickel
ZL	Environmental	Stainless Steel	Electro-Deposited Nickel
XM	Environmental	Composite	Electroless Nickel
XMT	Environmental	Composite	Ni-PTFE *1000 Hour Grey*™ Nickel Fluorocarbon Polymer
XW	Environmental	Composite	Cadmium O.D. Over Electroless Nickel
ZN	Environmental	Aluminum	Zinc-Nickel, Olive Drab
ZR	Environmental	Aluminum	Zinc Nickel, Black - RoHS

Dimensions			
Shell Size	**Ø CC Max**	**ØDD Max**	**EE Thread**
9	.811 (20.6)	.858 (21.8)	M12 X 1.0-6g 0.100R
11	.929 (23.6)	.984 (25.0)	M15 X 1.0-6g 0.100R
13	1.110 (28.2)	1.157 (29.4)	M18 X 1.0-6g 0.100R
15	1.232 (31.3)	1.280 (32.5)	M22 X 1.0-6g 0.100R
17	1.358 (34.5)	1.406 (35.7)	M25 X 1.0-6g 0.100R
19	1.469 (37.3)	1.516 (38.5)	M28 X 1.0-6g 0.100R
21	1.594 (40.5)	1.642 (41.7)	M31 X 1.0-6g 0.100R
23	1.720 (43.7)	1.768 (44.9)	M34 X 1.0-6g 0.100R
25	1.843 (46.8)	1.890 (48.0)	M37 X 1.0-6g 0.100R

Capacitor Array Code Capacitance Range		
Class	**Pi - Circuit (pF)**	**C - Circuit (pF)**
X*	160,000 - 240,000	80,000 - 120,000
Y*	80,000 - 120,000	40,000 - 60,000
Z*	60,000 - 90,000	30,000 - 45,000
A	38,000 - 56,000	19,000 - 28,000
B	32,000 - 45,000	16,000 - 22,500
C	18,000 - 33,000	9,000 - 16,500
D	8,000 - 12,000	4,000 - 6,000
E	3,300 - 5,000	1,650 - 2,500
F	800 - 1,300	400 - 650
G	400 - 600	200 - 300
J	70-120	35-60
* Filter Classes X, Y and Z are 250 VDC. All others are 500 VDC		

Consult Factory for Additional Filter Types, TVS Diodes, and other Custom Configurations.

© 2022 Glenair, Inc • 1211 Air Way, Glendale, CA 91201 • 818-247-6000 • www.glenair.com • U.S. CAGE code 06324 • SuperNine® Catalog
Dimensions in Inches (millimeters) are subject to change without notice.

SuperNine® EMI/RFI filter

MIL-DTL-38999 Series III Type connectors

240-383Q Plug connector with crimp removable contacts

SUPERNINE EMI/RFI FILTER PLUG WITH CRIMP REMOVABLE CONTACTS

Part Nmber Development										
Sample Part Number	**240-383**	**Q**	**ME**	**15-35**	**P**	**C**	**P**	**A**	**N**	**N**
Filter Connector	MIL-DTL-38999 Series III Type									
Shell Style	**Q** = Plug with Crimp Contacts									
Connector Class	See Connector Class Table									
Insert Arrangement*	IAW MIL-STD-1560.									
Contact Gender	**P** = Pin **S** = Socket									
Termination	**C** = Crimp									
Filter Type	**P** = Pi Circuit **C** = C Circuit (See Note 2)									
Capacitance	See Capacitor Array Code Table									
Flange Mounting Style	**N** = Not Applicable									
Alternate Key Position*	**A**, **B**, **C**, **D**, **E**, **N** = Normal									

*Refer to Section A for complete details

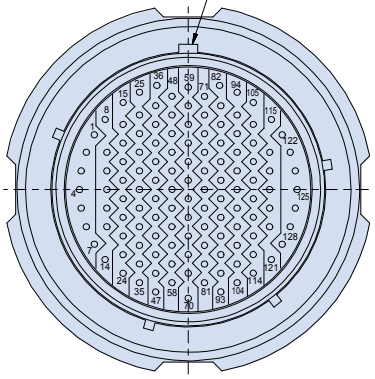

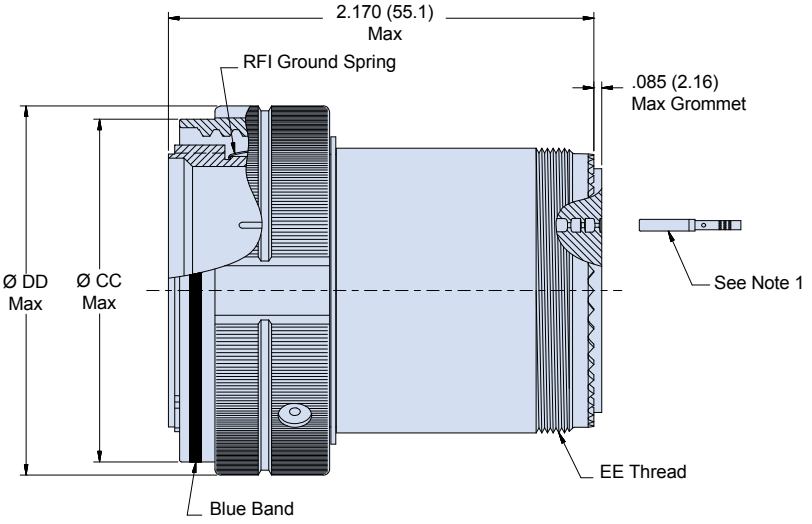

NOTES

1. Crimp removable contacts to conform to MIL-C-39029/57-358, Size 16, MIL-C-39029/57-357 Size 20, and MIL-C-39029/57-354 Size 22D (Supplied loose).
2. Other filter styles (C-L, L-C, Unbalanced Pi, Multi-Stage, Multi-Value) are available, please consult the factory.

© 2022 Glenair, Inc • 1211 Air Way, Glendale, CA 91201 • 818-247-6000 • www.glenair.com • U.S. CAGE code 06324 • SuperNine® Catalog
Dimensions in Inches (millimeters) are subject to change without notice.

SuperNine® EMI/RFI filter

MIL-DTL-38999 Series III Type connectors

240-383Q Plug connector with crimp removable contacts

Connector Class			
Sym	**Class**	**Material**	**Finish Description**
ME	Environmental	Aluminum	Electroless Nickel
MT	Environmental	Aluminum	Ni-PTFE *1000 Hour Grey*™ Nickel Fluorocarbon Polymer
NF	Environmental	Aluminum	Cadmium O.D. Over Electroless Nickel
ZL	Environmental	Stainless Steel	Electro-Deposited Nickel
XM	Environmental	Composite	Electroless Nickel
XMT	Environmental	Composite	Ni-PTFE *1000 Hour Grey*™ Nickel Fluorocarbon Polymer
XW	Environmental	Composite	Cadmium O.D. Over Electroless Nickel
ZN	Environmental	Aluminum	Zinc-Nickel, Olive Drab
ZR	Environmental	Aluminum	Zinc Nickel, Black - RoHS

Dimensions			
Shell Size	**Ø CC Max**	**ØDD Max**	**EE Thread**
9	.811 (20.6)	.858 (21.8)	M12 X 1.0-6g 0.100R
11	.929 (23.6)	.984 (25.0)	M15 X 1.0-6g 0.100R
13	1.110 (28.2)	1.157 (29.4)	M18 X 1.0-6g 0.100R
15	1.232 (31.3)	1.280 (32.5)	M22 X 1.0-6g 0.100R
17	1.358 (34.5)	1.406 (35.7)	M25 X 1.0-6g 0.100R
19	1.469 (37.3)	1.516 (38.5)	M28 X 1.0-6g 0.100R
21	1.594 (40.5)	1.642 (41.7)	M31 X 1.0-6g 0.100R
23	1.720 (43.7)	1.768 (44.9)	M34 X 1.0-6g 0.100R
25	1.843 (46.8)	1.890 (48.0)	M37 X 1.0-6g 0.100R

Capacitor Array Code Capacitance Range		
Class	**Pi - Circuit (pF)**	**C - Circuit (pF)**
X*	160,000 - 240,000	80,000 - 120,000
Y*	80,000 - 120,000	40,000 - 60,000
Z*	60,000 - 90,000	30,000 - 45,000
A	38,000 - 56,000	19,000 - 28,000
B	32,000 - 45,000	16,000 - 22,500
C	18,000 - 33,000	9,000 - 16,500
D	8,000 - 12,000	4,000 - 6,000
E	3,300 - 5,000	1,650 - 2,500
F	800 - 1,300	400 - 650
G	400 - 600	200 - 300
J	70-120	35-60
* Filter Classes X, Y and Z are 250 VDC. All others are 500 VDC		

Consult Factory for Additional Filter Types, TVS Diodes, and other Custom Configurations.

© 2022 Glenair, Inc • 1211 Air Way, Glendale, CA 91201 • 818-247-6000 • www.glenair.com • U.S. CAGE code 06324 • SuperNine® Catalog
Dimensions in Inches (millimeters) are subject to change without notice.

SuperNine® EMI/RFI filter

MIL-DTL-38999 Series III Type connectors

240-383W Wall mount receptacle connector

SUPERNINE EMI/RFI FILTER WALL MOUNT RECEPTACLE WITH SOLDER CUP OR PC TAIL TERMINATION

Part Nmber Development										
Sample Part Number	**240-383**	**W**	**ME**	**15-35**	**P**	**S**	**P**	**A**	**C**	**N**
Filter Connector	MIL-DTL-38999 Series III Type									
Shell Style	**W** = Wall Mount									
Connector Class	See Connector Class Table									
Insert Arrangement*	IAW MIL-STD-1560									
Contact Gender	**P** = Pin **S** = Socket									
Termination	**S** = Solder Cup **P** = PC Tail									
Filter Type	**P** = Pi Circuit **C** = C Circuit (See Note 1)									
Capacitance	See Capacitor Array Code Table									
Flange Mounting Style	**H** = Round Holes **C** = Clinch Nuts (4-40 UNC) **M** = Metric Clinch Nuts (M3) **S** = Slotted Holes									
Alternate Key Position*	**A**, **B**, **C**, **D**, **E**, **N** = Normal									

*Refer to Section A for complete details

Round Hole Flange Mounting Style

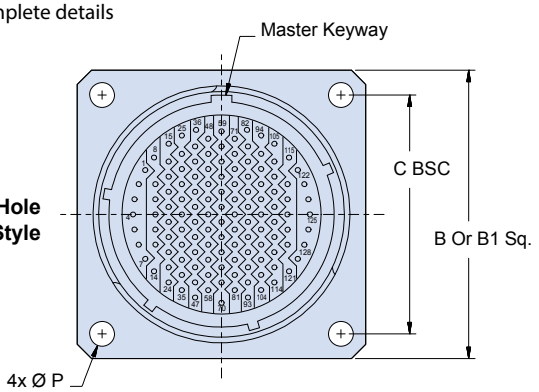

Slotted Hole Flange Mounting Style

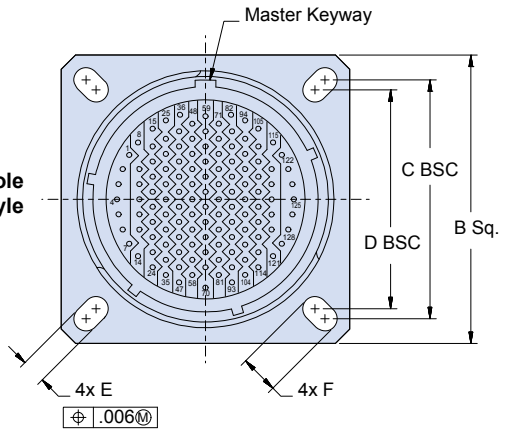

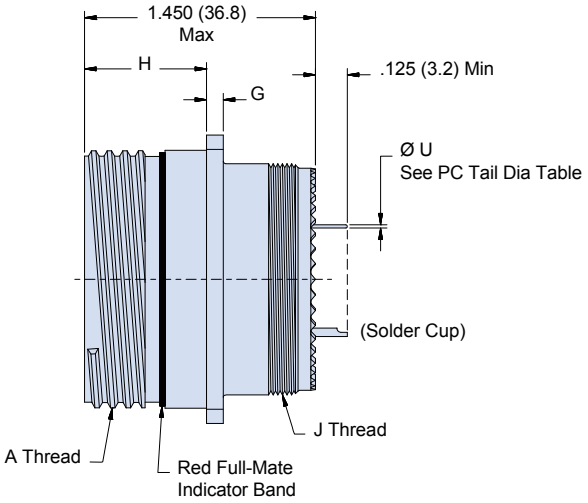

NOTES

1. Other filter styles (C-L, L-C, Unbalanced Pi, Multi-Stage, Multi-Value) are available, please consult the factory.
2. Consult factory for alternate PC Tail lengths
3. Helicoil and threaded inserts/specials available upon request.

© 2022 Glenair, Inc • 1211 Air Way, Glendale, CA 91201 • 818-247-6000 • www.glenair.com • U.S. CAGE code 06324 • SuperNine® Catalog
Dimensions in Inches (millimeters) are subject to change without notice.

SuperNine® EMI/RFI filter

MIL-DTL-38999 Series III Type connectors

240-383W Wall mount receptacle connector

Connector Class			
Sym	**Class**	**Material**	**Finish Description**
ME	Environmental	Aluminum	Electroless Nickel
MT	Environmental	Aluminum	Ni-PTFE *1000 Hour Grey*™ Nickel Fluorocarbon Polymer
NF	Environmental	Aluminum	Cadmium O.D. Over Electroless Nickel
ZL	Environmental	Stainless Steel	Electro-Deposited Nickel
XM†	Environmental	Composite	Electroless Nickel
XMT†	Environmental	Composite	Ni-PTFE *1000 Hour Grey*™ Nickel Fluorocarbon Polymer
XW†	Environmental	Composite	Cadmium O.D. Over Electroless Nickel
ZN	Environmental	Aluminum	Zinc-Nickel, Olive Drab
ZR	Environmental	Aluminum	Zinc Nickel, Black - RoHS
H2*	Hermetic	Stainless Steel	Electro-Deposited Nickel
*Some dimensions do not apply. See drawing 240-383WH2 † Clinch nuts and metric clinch nuts not available for composites.			

Dimensions											
		Thru Hole Flange		Clinch Nut Flange	Slotted Hole Flange						
Shell Size	**A Thread**	**B Sq.**	**Ø P ±.010 (.25)**	**B1 Sq. ±.020 (.51)**	**C Bsc**	**D Bsc**	**E**	**F**	**G**	**H**	**J Thread**
9	.6250-.1P-.3L-TS-2A	.949 (24.1) .925 (23.5)	.128 (3.3)	1.019 (25.9)	.719 (18.3)	.594 (15.1)	.136 (3.5) .120 (3.0)	.224 (5.7) .208 (5.3)	.144 (3.7) .083 (2.1)	.820 (20.8) .771 (19.6)	M12 X 1.0-6g 0.100R
11	.7500-.1P-.3L-TS-2A	1.043 (26.5) 1.019 (25.9)	.128 (3.3)	1.112 (28.2)	.812 (20.6)	.719 (18.3)	.136 (3.5) .120 (3.0)	.202 (5.1) .186 (4.7)	.144 (3.7) .083 (2.1)	.820 (20.8) .771 (19.6)	M15 X 1.0-6g 0.100R
13	.8750-.1P-.3L-TS-2A	1.138 (28.9) 1.114 (28.3)	.128 (3.3)	1.206 (30.6)	.906 (23.0)	.812 (20.6)	.136 (3.5) .120 (3.0)	.202 (5.1) .186 (4.7)	.144 (3.7) .083 (2.1)	.820 (20.8) .771 (19.6)	M18 X 1.0-6g 0.100R
15	1.0000-.1P-.3L-TS-2A	1.232 (31.3) 1.208 (30.7)	.128 (3.3)	1.269 (32.2)	.969 (24.6)	.906 (23.0)	.136 (3.5) .120 (3.0)	.181 (4.6) .165 (4.2)	.144 (3.7) .083 (2.1)	.820 (20.8) .771 (19.6)	M22 X 1.0-6g 0.100R
17	1.1875-.1P-.3L-TS-2A	1.323 (33.6) 1.299 (33.0)	.128 (3.3)	1.362 (34.6)	1.062 (27.0)	.969 (24.6)	.136 (3.5) .120 (3.0)	.202 (5.1) .186 (4.7)	.144 (3.7) .083 (2.1)	.820 (20.8) .771 (19.6)	M25 X 1.0-6g 0.100R
19	1.2500-.1P-.3L-TS-2A	1.449 (36.8) 1.425 (36.2)	.128 (3.3)	1.456 (37.0)	1.156 (29.4)	1.062 (27.0)	.136 (3.5) .120 (3.0)	.202 (5.1) .186 (4.7)	.144 (3.7) .083 (2.1)	.820 (20.8) .771 (19.6)	M28 X 1.0-6g 0.100R
21	1.3750-.1P-.3L-TS-2A	1.575 (40.0) 1.551 (39.4)	.128 (3.3)	1.562 (39.7)	1.250 (31.8)	1.156 (29.4)	.136 (3.5) .120 (3.0)	.202 (5.1) .186 (4.7)	.171 (4.3) .083 (2.1)	.790 (20.1) .741 (18.8)	M31 X 1.0-6g 0.100R
23	1.5000-.1P-.3L-TS-2A	1.701 (43.2) 1.677 (42.6)	.156 (4.0)	1.719 (43.7)	1.375 (34.9)	1.250 (31.8)	.162 (4.1) .146 (3.7)	.250 (6.4) .234 (5.9)	.171 (4.3) .083 (2.1)	.790 (20.1) .741 (18.8)	M34 X 1.0-6g 0.100R
25	1.6250-.1P-.3L-TS-2A	1.823 (46.3) 1.799 (45.7)	.156 (4.0)	1.844 (46.8)	1.500 (38.1)	1.375 (34.9)	.162 (4.1) .146 (3.7)	.250 (6.4) .234 (5.9)	.171 (4.3) .083 (2.1)	.790 (20.1) .741 (18.8)	M37 X 1.0-6g 0.100R

Capacitor Array Code Capacitance Range		
Class	**Pi - Circuit (pF)**	**C - Circuit (pF)**
X*	160,000 - 240,000	80,000 - 120,000
Y*	80,000 - 120,000	40,000 - 60,000
Z*	60,000 - 90,000	30,000 - 45,000
A	38,000 - 56,000	19,000 - 28,000
B	32,000 - 45,000	16,000 - 22,500
C	18,000 - 33,000	9,000 - 16,500
D	8,000 - 12,000	4,000 - 6,000
E	3,300 - 5,000	1,650 - 2,500
F	800 - 1,300	400 - 650
G	400 - 600	200 - 300
J	70-120	35-60
* Filter Classes X, Y and Z are 250 VDC. All others are 500 VDC		

PC Tail Dia	
Contact Size	**Ø U**
22D	.021 (0.53) .018 (0.46)
20	.031 (0.79) .029 (0.74)
16	.042 (1.07) .038 (0.97)
12	.096 (2.44) .092 (2.34)

© 2022 Glenair, Inc • 1211 Air Way, Glendale, CA 91201 • 818-247-6000 • www.glenair.com • U.S. CAGE code 06324 • SuperNine® Catalog
Dimensions in Inches (millimeters) are subject to change without notice.

SuperNine® EMI/RFI filter

MIL-DTL-38999 Series III Type connectors

240-383J Jam nut receptacle connector

SUPERNINE EMI/RFI FILTER JAM NUT RECEPTACLE WITH SOLDER CUP OR PC TAIL TERMINATION

Part Nmber Development										
Sample Part Number	**240-383**	**J**	**ME**	**15-35**	**P**	**S**	**P**	**A**	**N**	**N**
Filter Connector	MIL-DTL-38999 Series III Type									
Shell Style	**J** = Jam Nut									
Connector Class	See Connector Class Table									
Insert Arrangement*	IAW MIL-STD-1560.									
Contact Gender	**P** = Pin **S** = Socket									
Termination	**S** = Solder Cup **P** = PC Tail									
Filter Type	**P** = Pi Circuit **C** = C Circuit (See Note 1)									
Capacitance	See Capacitor Array Code Table									
Flange Mounting Style	**N** = Not Applicable									
Alternate Key Position*	**A**, **B**, **C**, **D**, **E**, **N** = Normal									

*Refer to Section A for complete details

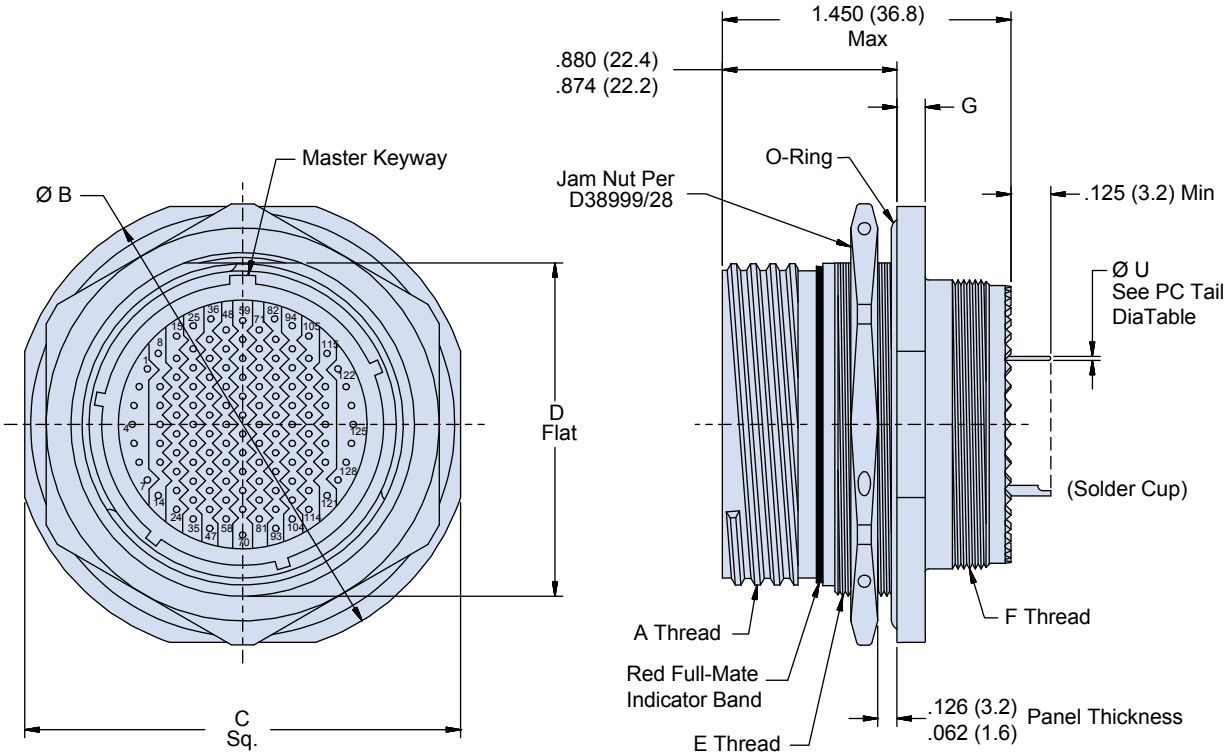

NOTES

1. Other filter styles (C-L, L-C, Unbalanced Pi, Multi-Stage, Multi-Value) are available, please consult the factory.

© 2022 Glenair, Inc • 1211 Air Way, Glendale, CA 91201 • 818-247-6000 • www.glenair.com • U.S. CAGE code 06324 • SuperNine® Catalog
Dimensions in Inches (millimeters) are subject to change without notice.

SuperNine® EMI/RFI filter

MIL-DTL-38999 Series III Type connectors

240-383J Jam nut receptacle connector

Connector Class			
Sym	**Class**	**Material**	**Finish Description**
ME	Environmental	Aluminum	Electroless Nickel
MT	Environmental	Aluminum	Ni-PTFE *1000 Hour Grey*™ Nickel Fluorocarbon Polymer
NF	Environmental	Aluminum	Cadmium O.D. Over Electroless Nickel
ZL	Environmental	Stainless Steel	Electro-Deposited Nickel
XM	Environmental	Composite	Electroless Nickel
XMT	Environmental	Composite	Ni-PTFE *1000 Hour Grey*™ Nickel Fluorocarbon Polymer
XW	Environmental	Composite	Cadmium O.D. Over Electroless Nickel
ZN	Environmental	Aluminum	Zinc-Nickel, Olive Drab
ZR	Environmental	Aluminum	Zinc Nickel, Black - RoHS
H2*	Hermetic	Stainless Steel	Electro-Deposited Nickel
*Some dimensions do not apply. See drawing 240-383JH2			

Dimensions							
Shell Size	**A Thread**	**Ø B**	**C Sq.**	**D Flat**	**E Thread**	**F Thread**	**G**
9	.6250- .1P- .3L-TS-2A	1.201 (30.5) 1.177 (29.9)	1.079 (27.4) 1.047 (26.6)	.655 (16.6) .645 (16.4)	M17 X 1.0-6g 0.100R	M12 X 1.0-6g 0.100R	.122 (3.1) .083 (2.1)
11	.7500- .1P- .3L-TS-2A	1.386 (35.2) 1.362 (34.6)	1.268 (32.2) 1.236 (31.4)	.755 (19.2) .745 (18.9)	M20 X 1.0-6g 0.100R	M15 X 1.0-6g 0.100R	.122 (3.1) .083 (2.1)
13	.8750- .1P- .3L-TS-2A	1.512 (38.4) 1.488 (37.8)	1.390 (35.3) 1.358 (34.5)	.942 (23.9) .932 (23.7)	M25 X 1.0-6g 0.100R	M18 X 1.0-6g 0.100R	.122 (3.1) .083 (2.1)
15	1.000- .1P- .3L-TS-2A	1.638 (41.6) 1.614 (41.0)	1.516 (38.5) 1.484 (37.7)	1.066 (27.1) 1.056 (26.8)	M28 X 1.0-6g 0.100R	M22 X 1.0-6g 0.100R	.122 (3.1) .083 (2.1)
17	1.1875- .1P- .3L-TS-2A	1.764 (44.8) 1.740 (44.2)	1.642 (41.7) 1.610 (40.9)	1.191 (30.3) 1.181 (30.0)	M32 X 1.0-6g 0.100R	M25 X 1.0-6g 0.100R	.122 (3.1) .083 (2.1)
19	1.2500- .1P- .3L-TS-2A	1.949 (49.5) 1.925 (48.9)	1.827 (46.4) 1.795 (45.6)	1.316 (33.4) 1.306 (33.2)	M35 X 1.0-6g 0.100R	M28 X 1.0-6g 0.100R	.154 (3.9) .114 (2.9)
21	1.3750- .1P- .3L-TS-2A	2.075 (52.7) 2.051 (52.1)	1.953 (49.6) 1.921 (48.8)	1.441 (36.6) 1.431 (36.3)	M38 X 1.0-6g 0.100R	M31 X 1.0-6g 0.100R	.154 (3.9) .114 (2.9)
23	1.5000- .1P- .3L-TS-2A	2.201 (55.9) 2.177 (55.3)	2.079 (52.8) 2.047 (52.0)	1.566 (39.8) 1.556 (39.5)	M41 X 1.0-6g 0.100R	M34 X 1.0-6g 0.100R	.154 (3.9) .114 (2.9)
25	1.6250- .1P- .3L-TS-2A	2.323 (59.0) 2.299 (58.4)	2.205 (56.0) 2.173 (55.2)	1.691 (43.0) 1.681 (42.7)	M44 X 1.0-6g 0.100R	M37 X 1.0-6g 0.100R	.154 (3.9) .114 (2.9)

Capacitor Array Code Capacitance Range		
Class	**Pi - Circuit (pF)**	**C - Circuit (pF)**
X*	160,000 - 240,000	80,000 - 120,000
Y*	80,000 - 120,000	40,000 - 60,000
Z*	60,000 - 90,000	30,000 - 45,000
A	38,000 - 56,000	19,000 - 28,000
B	32,000 - 45,000	16,000 - 22,500
C	18,000 - 33,000	9,000 - 16,500
D	8,000 - 12,000	4,000 - 6,000
E	3,300 - 5,000	1,650 - 2,500
F	800 - 1,300	400 - 650
G	400 - 600	200 - 300
J	70-120	35-60
* Filter Classes X, Y and Z are 250 VDC. All others are 500 VDC		

PC Tail Dia	
Contact Size	**Ø U**
22D	.021 (0.53) .018 (0.46)
20	.031 (0.79) .029 (0.74)
16	.042 (1.07) .038 (0.97)
12	.096 (2.44) .092 (2.34)

Consult Factory for Additional Filter Types, TVS Diodes, and other Custom Configurations.

© 2022 Glenair, Inc • 1211 Air Way, Glendale, CA 91201 • 818-247-6000 • www.glenair.com • U.S. CAGE code 06324 • SuperNine® Catalog
Dimensions in Inches (millimeters) are subject to change without notice.

ADVANCED PERFORMANCE

SuperNine® EMI/RFI filter

MIL-DTL-38999 Series III Type connectors

240-383R Wall mount receptacle with crimp contacts

SUPERNINE EMI/RFI FILTER WALL MOUNT RECEPTACLE WITH CRIMP REMOVABLE CONTACTS

Part Nmber Development										
Sample Part Number	**240-383**	**R**	**ME**	**15-35**	**P**	**C**	**P**	**A**	**C**	**N**
Filter Connector	MIL-DTL-38999 Series III Type									
Shell Style	**R** = Wall Mount with Crimp Contacts									
Connector Class	See Connector Class Table									
Insert Arrangement*	IAW MIL-STD-1560.									
Contact Gender	**P** = Pin **S** = Socket									
Termination	**C** = Crimp									
Filter Type	**P** = Pi Circuit **C** = C Circuit (See Note 2)									
Capacitance	See Capacitor Array Code Table									
Flange Mounting Style	**H** = Round Holes **C** = Clinch Nuts (4-40 UNC)† **M** = Metric Clinch Nuts (M3)† **S** = Slotted Holes									
Alternate Key Position*	**A**, **B**, **C**, **D**, **E**, **N** = Normal									

*Refer to Section A for complete details

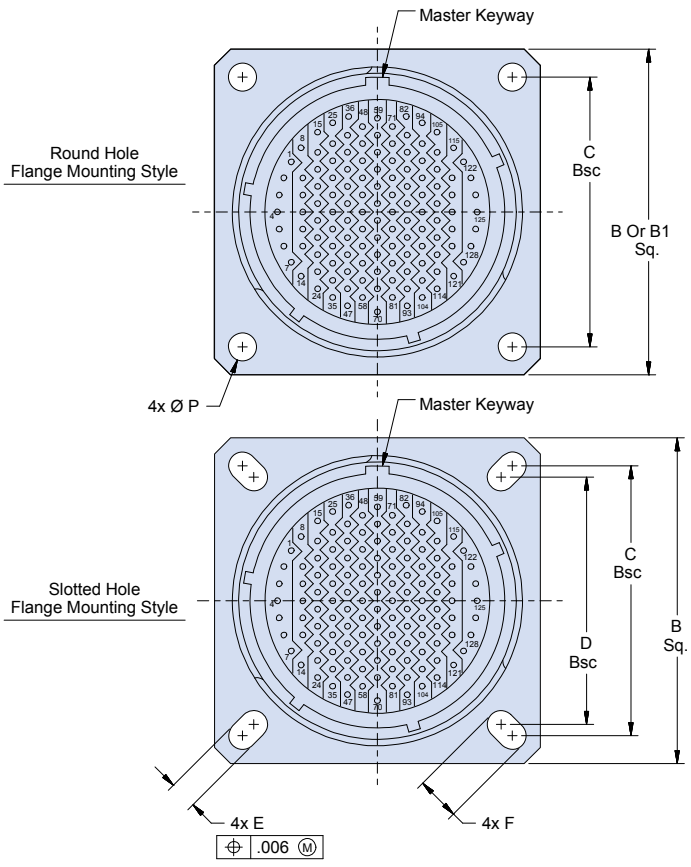

NOTES

1. Crimp removable contacts to conform to MIL-C-39029/57-358, Size 16, MIL-C-39029/57-357 Size 20, and MIL-C-39029/57-354 Size 22D (Supplied loose).
2. Other filter styles (C-L, L-C, Unbalanced Pi, Multi-Stage, Multi-Value) are available, please consult the factory.
3. Helicoil and threaded inserts/specials available upon request.

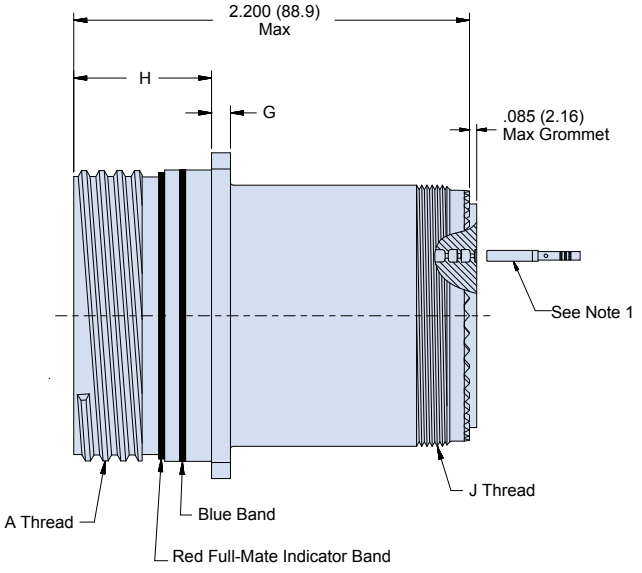

© 2022 Glenair, Inc • 1211 Air Way, Glendale, CA 91201 • 818-247-6000 • www.glenair.com • U.S. CAGE code 06324 • SuperNine® Catalog
Dimensions in Inches (millimeters) are subject to change without notice.

SuperNine® EMI/RFI filter

MIL-DTL-38999 Series III Type connectors

240-383R Wall mount receptacle with crimp contacts

Connector Class			
Sym	**Class**	**Material**	**Finish Description**
ME	Environmental	Aluminum	Electroless Nickel
MT	Environmental	Aluminum	Ni-PTFE *1000 Hour Grey*™ Nickel Fluorocarbon Polymer
NF	Environmental	Aluminum	Cadmium O.D. Over Electroless Nickel
ZL	Environmental	Stainless Steel	Electro-Deposited Nickel
XM†	Environmental	Composite	Electroless Nickel
XMT†	Environmental	Composite	Ni-PTFE *1000 Hour Grey*™ Nickel Fluorocarbon Polymer
XW†	Environmental	Composite	Cadmium O.D. Over Electroless Nickel
ZN	Environmental	Aluminum	Zinc-Nickel, Olive Drab
ZR	Environmental	Aluminum	Zinc Nickel, Black - RoHS
H2*	Hermetic	Stainless Steel	Electro-Deposited Nickel
*Some dimensions do not apply. See drawing 240-383RH2 † Clinch nuts and metric clinch nuts not available for composites.			

Dimensions											
		Thru Hole Flange		Clinch Nut Flange	Slotted Hole Flange						
Shell Size	**A Thread**	**B Sq.**	**Ø P ±.010 (.25)**	**B1 Sq. ±.020 (.51)**	**C Bsc**	**D Bsc**	**E**	**F**	**G**	**H**	**J Thread**
9	.6250-.1P-.3L-TS-2A	.949 (24.1) .925 (23.5)	.128 (3.3)	1.019 (25.9)	.719 (18.3)	.594 (15.1)	.136 (3.5) .120 (3.0)	.224 (5.7) .208 (5.3)	.144 (3.7) .083 (2.1)	.820 (20.8) .771 (19.6)	M12 X 1.0-6g 0.100R
11	.7500-.1P-.3L-TS-2A	1.043 (26.5) 1.019 (25.9)	.128 (3.3)	1.112 (28.2)	.812 (20.6)	.719 (18.3)	.136 (3.5) .120 (3.0)	.202 (5.1) .186 (4.7)	.144 (3.7) .083 (2.1)	.820 (20.8) .771 (19.6)	M15 X 1.0-6g 0.100R
13	.8750-.1P-.3L-TS-2A	1.138 (28.9) 1.114 (28.3)	.128 (3.3)	1.206 (30.6)	.906 (23.0)	.812 (20.6)	.136 (3.5) .120 (3.0)	.202 (5.1) .186 (4.7)	.144 (3.7) .083 (2.1)	.820 (20.8) .771 (19.6)	M18 X 1.0-6g 0.100R
15	1.0000-.1P-.3L-TS-2A	1.232 (31.3) 1.208 (30.7)	.128 (3.3)	1.269 (32.2)	.969 (24.6)	.906 (23.0)	.136 (3.5) .120 (3.0)	.181 (4.6) .165 (4.2)	.144 (3.7) .083 (2.1)	.820 (20.8) .771 (19.6)	M22 X 1.0-6g 0.100R
17	1.1875-.1P-.3L-TS-2A	1.323 (33.6) 1.299 (33.0)	.128 (3.3)	1.362 (34.6)	1.062 (27.0)	.969 (24.6)	.136 (3.5) .120 (3.0)	.202 (5.1) .186 (4.7)	.144 (3.7) .083 (2.1)	.820 (20.8) .771 (19.6)	M25 X 1.0-6g 0.100R
19	1.2500-.1P-.3L-TS-2A	1.449 (36.8) 1.425 (36.2)	.128 (3.3)	1.456 (37.0)	1.156 (29.4)	1.062 (27.0)	.136 (3.5) .120 (3.0)	.202 (5.1) .186 (4.7)	.144 (3.7) .083 (2.1)	.820 (20.8) .771 (19.6)	M28 X 1.0-6g 0.100R
21	1.3750-.1P-.3L-TS-2A	1.575 (40.0) 1.551 (39.4)	.128 (3.3)	1.562 (39.7)	1.250 (31.8)	1.156 (29.4)	.136 (3.5) .120 (3.0)	.202 (5.1) .186 (4.7)	.171 (4.3) .083 (2.1)	.790 (20.1) .741 (18.8)	M31 X 1.0-6g 0.100R
23	1.5000-.1P-.3L-TS-2A	1.701 (43.2) 1.677 (42.6)	.156 (4.0)	1.719 (43.7)	1.375 (34.9)	1.250 (31.8)	.162 (4.1) .146 (3.7)	.250 (6.4) .234 (5.9)	.171 (4.3) .083 (2.1)	.790 (20.1) .741 (18.8)	M34 X 1.0-6g 0.100R
25	1.6250-.1P-.3L-TS-2A	1.823 (46.3) 1.799 (45.7)	.156 (4.0)	1.844 (46.8)	1.500 (38.1)	1.375 (34.9)	.162 (4.1) .146 (3.7)	.250 (6.4) .234 (5.9)	.171 (4.3) .083 (2.1)	.790 (20.1) .741 (18.8)	M37 X 1.0-6g 0.100R

Capacitor Array Code Capacitance Range		
Class	**Pi - Circuit (pF)**	**C - Circuit (pF)**
X*	160,000 - 240,000	80,000 - 120,000
Y*	80,000 - 120,000	40,000 - 60,000
Z*	60,000 - 90,000	30,000 - 45,000
A	38,000 - 56,000	19,000 - 28,000
B	32,000 - 45,000	16,000 - 22,500
C	18,000 - 33,000	9,000 - 16,500
D	8,000 - 12,000	4,000 - 6,000
E	3,300 - 5,000	1,650 - 2,500
F	800 - 1,300	400 - 650
G	400 - 600	200 - 300
J	70-120	35-60
* Filter Classes X, Y and Z are 250 VDC. All others are 500 VDC		

Consult Factory for Additional Filter Types, TVS Diodes, and other Custom Configurations.

© 2022 Glenair, Inc • 1211 Air Way, Glendale, CA 91201 • 818-247-6000 • www.glenair.com • U.S. CAGE code 06324 • SuperNine® Catalog
Dimensions in Inches (millimeters) are subject to change without notice.

SuperNine® EMI/RFI filter

MIL-DTL-38999 Series III Type connectors

240-383S Jam nut receptacle connector with crimp contacts

SUPERNINE EMI/RFI FILTER JAM NUT RECEPTACLE WITH CRIMP REMOVABLE CONTACTS

Part Nmber Development										
Sample Part Number	**240-383**	**S**	**ME**	**15-35**	**P**	**C**	**P**	**A**	**N**	**N**
Filter Connector	MIL-DTL-38999 Series III Type									
Shell Style	**S** = Jam Nut with Crimp Contacts									
Connector Class	See Connector Class Table									
Insert Arrangement*	IAW MIL-STD-1560.									
Contact Gender	**P** = Pin **S** = Socket									
Termination	**C** = Crimp									
Filter Type	**P** = Pi Circuit **C** = C Circuit (See Note 2)									
Capacitance	See Capacitor Array Code Table									
Flange Mounting Style	**N** = Not Applicable									
Alternate Key Position*	**A**, **B**, **C**, **D**, **E**, **N** = Normal									

*Refer to Section A for complete details

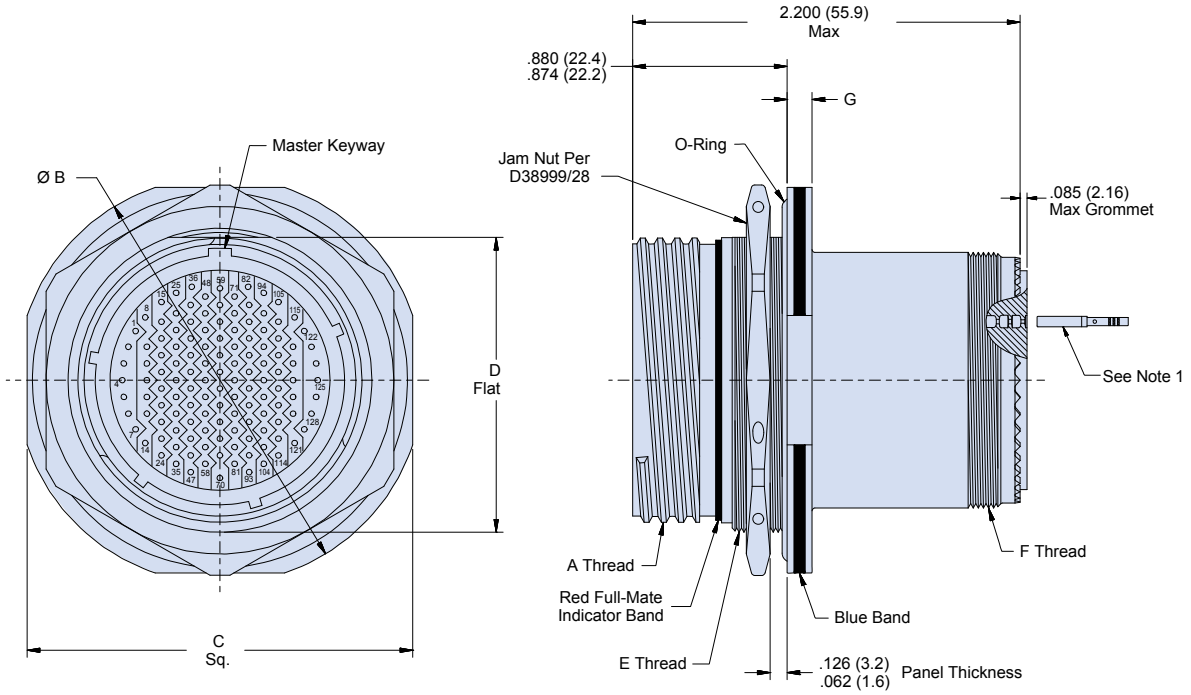

NOTES

1. Crimp removable contacts to conform to MIL-C-39029/57-358, Size 16, MIL-C-39029/57-357 Size 20, and MIL-C-39029/57-354 Size 22D (Supplied loose).
2. Other filter styles (C-L, L-C, Unbalanced Pi, Multi-Stage, Multi-Value) are available, please consult the factory.

© 2022 Glenair, Inc • 1211 Air Way, Glendale, CA 91201 • 818-247-6000 • www.glenair.com • U.S. CAGE code 06324 • SuperNine® Catalog
Dimensions in Inches (millimeters) are subject to change without notice.

SuperNine® EMI/RFI filter

MIL-DTL-38999 Series III Type connectors

240-383S Jam nut receptacle connector with crimp contacts

Connector Class			
Sym	**Class**	**Material**	**Finish Description**
ME	Environmental	Aluminum	Electroless Nickel
MT	Environmental	Aluminum	Ni-PTFE *1000 Hour Grey*™ Nickel Fluorocarbon Polymer
NF	Environmental	Aluminum	Cadmium O.D. Over Electroless Nickel
ZL	Environmental	Stainless Steel	Electro-Deposited Nickel
XM	Environmental	Composite	Electroless Nickel
XMT	Environmental	Composite	Ni-PTFE *1000 Hour Grey*™ Nickel Fluorocarbon Polymer
XW	Environmental	Composite	Cadmium O.D. Over Electroless Nickel
ZN	Environmental	Aluminum	Zinc-Nickel, Olive Drab
ZR	Environmental	Aluminum	Zinc Nickel, Black - RoHS
H2*	Hermetic	Stainless Steel	Electro-Deposited Nickel
*Some dimensions do not apply. See drawing 240-383SH2			

Dimensions							
Shell Size	**A Thread**	**Ø B**	**C**	**D**	**E Thread**	**F Thread**	**G**
9	.6250- .1P- .3L-TS-2A	1.201 (30.5) 1.177 (29.9)	1.079 (27.4) 1.047 (26.6)	.655 (16.6) .645 (16.4)	M17 X 1.0-6g 0.100R	M12 X 1.0-6g 0.100R	.122 (3.1) .083 (2.1)
11	.7500- .1P- .3L-TS-2A	1.386 (35.2) 1.362 (34.6)	1.268 (32.2) 1.236 (31.4)	.755 (19.2) .745 (18.9)	M20 X 1.0-6g 0.100R	M15 X 1.0-6g 0.100R	.122 (3.1) .083 (2.1)
13	.8750- .1P- .3L-TS-2A	1.512 (38.4) 1.488 (37.8)	1.390 (35.3) 1.358 (34.5)	.942 (23.9) .932 (23.7)	M25 X 1.0-6g 0.100R	M18 X 1.0-6g 0.100R	.122 (3.1) .083 (2.1)
15	1.000- .1P- .3L-TS-2A	1.638 (41.6) 1.614 (41.0)	1.516 (38.5) 1.484 (37.7)	1.066 (27.1) 1.056 (26.9)	M28 X 1.0-6g 0.100R	M22 X 1.0-6g 0.100R	.122 (3.1) .083 (2.1)
17	1.1875- .1P- .3L-TS-2A	1.764 (44.8) 1.740 (44.2)	1.642 (41.7) 1.610 (40.9)	1.191 (30.3) 1.181 (30.0)	M32 X 1.0-6g 0.100R	M25 X 1.0-6g 0.100R	.122 (3.1) .083 (2.1)
19	1.2500- .1P- .3L-TS-2A	1.949 (49.5) 1.925 (48.9)	1.827 (46.4) 1.795 (45.6)	1.316 (33.4) 1.306 (33.2)	M35 X 1.0-6g 0.100R	M28 X 1.0-6g 0.100R	.154 (3.9) .114 (2.9)
21	1.3750- .1P- .3L-TS-2A	2.075 (52.7) 2.051 (52.1)	1.953 (49.6) 1.921 (48.8)	1.441 (36.6) 1.431 (36.3)	M38 X 1.0-6g 0.100R	M31 X 1.0-6g 0.100R	.154 (3.9) .114 (2.9)
23	1.5000- .1P- .3L-TS-2A	2.201 (55.9) 2.177 (55.3)	2.079 (52.8) 2.047 (52.0)	1.566 (39.8) 1.556 (39.5)	M41 X 1.0-6g 0.100R	M34 X 1.0-6g 0.100R	.154 (3.9) .114 (2.9)
25	1.6250- .1P- .3L-TS-2A	2.323 (59.0) 2.299 (58.4)	2.205 (56.0) 2.173 (55.2)	1.691 (43.0) 1.681 (42.7)	M44 X 1.0-6g 0.100R	M37 X 1.0-6g 0.100R	.154 (3.9) .114 (2.9)

Capacitor Array Code Capacitance Range		
Class	**Pi - Circuit (pF)**	**C - Circuit (pF)**
X*	160,000 - 240,000	80,000 - 120,000
Y*	80,000 - 120,000	40,000 - 60,000
Z*	60,000 - 90,000	30,000 - 45,000
A	38,000 - 56,000	19,000 - 28,000
B	32,000 - 45,000	16,000 - 22,500
C	18,000 - 33,000	9,000 - 16,500
D	8,000 - 12,000	4,000 - 6,000
E	3,300 - 5,000	1,650 - 2,500
F	800 - 1,300	400 - 650
G	400 - 600	200 - 300
J	70-120	35-60
* Filter Classes X, Y and Z are 250 VDC. All others are 500 VDC		

Consult Factory for Additional Filter Types, TVS Diodes, and other Custom Configurations.

© 2022 Glenair, Inc • 1211 Air Way, Glendale, CA 91201 • 818-247-6000 • www.glenair.com • U.S. CAGE code 06324 • SuperNine® Catalog
Dimensions in Inches (millimeters) are subject to change without notice.

SuperNine® EMI/RFI filter

MIL-DTL-38999 Series III Type connectors

240-383D Dual flange wall mount receptacle connector

SUPERNINE EMI/RFI FILTER WALL MOUNT RECEPTACLE WITH PC TAILS

Part Nmber Development										
Sample Part Number	**240-383**	**D**	**ME**	**15-35**	**P**	**P**	**P**	**A**	**N**	**N**
Filter Connector	MIL-DTL-38999 Series III Type									
Shell Style	**D** = Dual Flange Wall Mount									
Connector Class	See Connector Class Table									
Insert Arrangement*	IAW MIL-STD-1560.									
Contact Gender	**P** = Pin **S** = Socket									
Termination	**P** = PC Tail									
Filter Type	**P** = Pi Circuit **C** = C Circuit (See Note 1)									
Capacitance	See Capacitor Array Code Table									
Flange Mounting Style	**N** = Not Applicable									
Alternate Key Position*	**A**, **B**, **C**, **D**, **E**, **N** = Normal									

*Refer to Section A for complete details

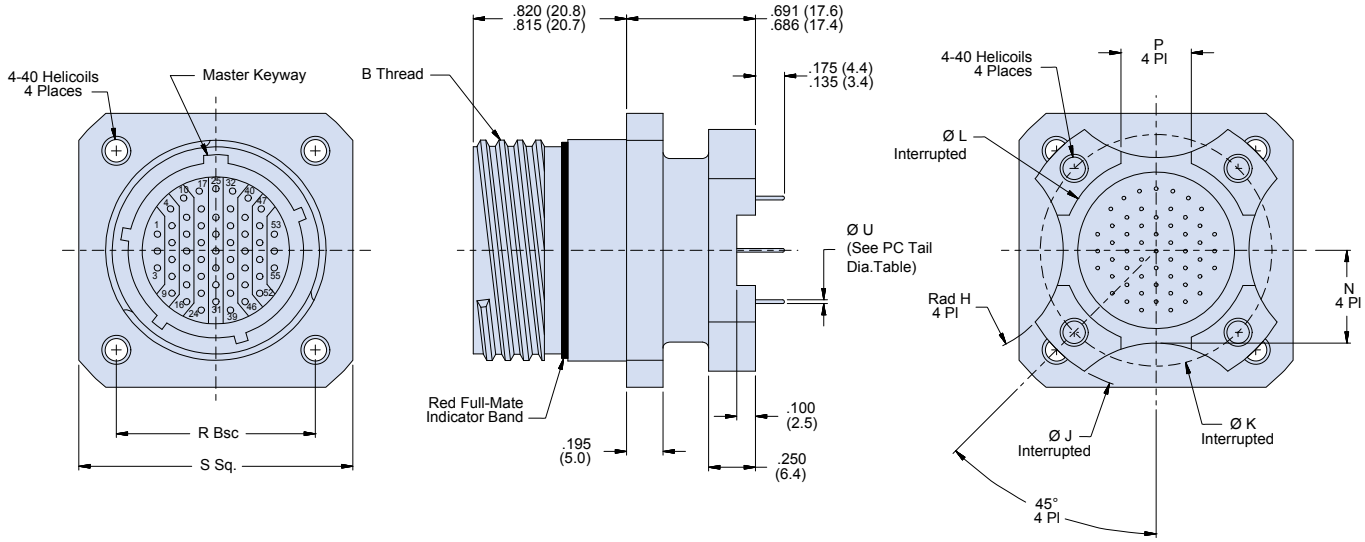

NOTES

1. Other filter styles (C-L, L-C, Unbalanced Pi, Multi-Stage, Multi-Value) are available, please consult the factory.

© 2022 Glenair, Inc • 1211 Air Way, Glendale, CA 91201 • 818-247-6000 • www.glenair.com • U.S. CAGE code 06324 • SuperNine® Catalog
Dimensions in Inches (millimeters) are subject to change without notice.

SuperNine® EMI/RFI filter

MIL-DTL-38999 Series III Type connectors

240-383D Dual flange wall mount receptacle connector

Connector Class			
Sym	**Class**	**Material**	**Finish Description**
ME	Environmental	Aluminum	Electroless Nickel
MT	Environmental	Aluminum	Ni-PTFE *1000 Hour Grey*™ Nickel Fluorocarbon Polymer
NF	Environmental	Aluminum	Cadmium O.D. Over Electroless Nickel
ZL	Environmental	Stainless Steel	Electro-Deposited Nickel
XM	Environmental	Composite	Electroless Nickel
XMT	Environmental	Composite	Ni-PTFE *1000 Hour Grey*™ Nickel Fluorocarbon Polymer
XW	Environmental	Composite	Cadmium O.D. Over Electroless Nickel
ZN	Environmental	Aluminum	Zinc-Nickel, Olive Drab
ZR	Environmental	Aluminum	Zinc Nickel, Black - RoHS
H2*	Hermetic	Stainless Steel	Electro-Deposited Nickel
*Some dimensions do not apply. See drawing 240-383DH2			

Dimensions									
Shell Size	**B Thread**	**P ±.010 (.25)**	**R Bsc**	**S ±.012 (.30)**	**Ø J ±.005 (.13)**	**Ø K Bsc**	**Ø L ±.005 (.13)**	**Rad H ±.020 (.51)**	**N ±.020 (.51)**
9	.6250-.1P-.3L-TS-2A	.225 (5.7)	.719 (18.3)	.937 (23.8)	1.016 (25.8)	.752 (19.1)	.532 (13.5)	.225 (5.7)	.275 (7.0)
11	.7500-.1P-.3L-TS-2A	.250 (6.4)	.812 (20.6)	1.181 (30.0)	1.062 (27.0)	.850 (21.6)	.595 (15.1)	.250 (6.4)	.290 (7.4)
13	.8750-.1P-.3L-TS-2A	.250 (6.4)	.906 (23.0)	1.277 (32.4)	1.250 (31.8)	.994 (25.2)	.720 (18.3)	.375 (9.5)	.370 (9.4)
15	1.0000-.1P-.3L-TS-2A	.325 (8.2)	.969 (24.6)	1.371 (34.8)	1.375 (34.9)	1.119 (28.4)	.843 (21.4)	.438 (11.1)	.440 (11.2)
17	1.1875-.1P-.3L-TS-2A	.375 (9.5)	1.062 (27.0)	1.462 (37.1)	1.500 (38.1)	1.237 (31.4)	1.000 (25.4)	.562 (14.3)	.495 (12.6)
19	1.2500-.1P-.3L-TS-2A	.500 (12.7)	1.156 (29.4)	1.588 (40.3)	1.625 (41.3)	1.379 (35.0)	1.125 (28.6)	.875 (22.2)	.540 (13.7)
21	1.3750-.1P-.3L-TS-2A	.562 (14.3)	1.250 (31.8)	1.714 (43.5)	1.750 (44.5)	1.489 (37.8)	1.240 (31.5)	1.170 (29.7)	.625 (15.9)
23	1.5000-.1P-.3L-TS-2A	.688 (17.5)	1.375 (34.9)	1.840 (46.7)	1.875 (47.6)	1.619 (41.1)	1.328 (33.7)	1.250 (31.8)	.660 (16.8)
25	1.6250-.1P-.3L-TS-2A	.750 (19.1)	1.500 (38.1)	1.962 (49.8)	2.000 (50.8)	1.744 (44.3)	1.453 (36.9)	1.375 (34.9)	.740 (18.8)

Capacitor Array Code Capacitance Range		
Class	**Pi - Circuit (pF)**	**C - Circuit (pF)**
X*	160,000 - 240,000	80,000 - 120,000
Y*	80,000 - 120,000	40,000 - 60,000
Z*	60,000 - 90,000	30,000 - 45,000
A	38,000 - 56,000	19,000 - 28,000
B	32,000 - 45,000	16,000 - 22,500
C	18,000 - 33,000	9,000 - 16,500
D	8,000 - 12,000	4,000 - 6,000
E	3,300 - 5,000	1,650 - 2,500
F	800 - 1,300	400 - 650
G	400 - 600	200 - 300
J	70-120	35-60
* Filter Classes X, Y and Z are 250 VDC. All others are 500 VDC		

PC Tail Dia	
Contact Size	**Ø U**
22D	.021 (0.53) .018 (0.46)
20	.031 (0.79) .029 (0.74)
16	.042 (1.07) .038 (0.97)
12	.096 (2.44) .092 (2.34)

© 2022 Glenair, Inc • 1211 Air Way, Glendale, CA 91201 • 818-247-6000 • www.glenair.com • U.S. CAGE code 06324 • SuperNine® Catalog
Dimensions in Inches (millimeters) are subject to change without notice.

SuperNine® EMI/RFI filter

MIL-DTL-38999 Series III Type connectors

240-383E Dual flange jam nut receptacle connector

SUPERNINE EMI/RFI FILTER JAM NUT RECEPTACLE WITH PC TAILS

Part Nmber Development										
Sample Part Number	**240-383**	**E**	**ME**	**15-35**	**P**	**P**	**P**	**A**	**N**	**N**
Filter Connector	MIL-DTL-38999 Series III Type									
Shell Style	**E** = Dual Flange Jam Nut									
Connector Class	See Connector Class Table									
Insert Arrangement*	IAW MIL-STD-1560.									
Contact Gender	**P** = Pin **S** = Socket									
Termination	**P** = PC Tail									
Filter Type	**P** = Pi Circuit **C** = C Circuit (See Note 1)									
Capacitance	See Capacitor Array Code Table									
Flange Mounting Style	**N** = Not Applicable									
Alternate Key Position*	**A**, **B**, **C**, **D**, **E**, **N** = Normal									

***Refer to Section A for complete details**

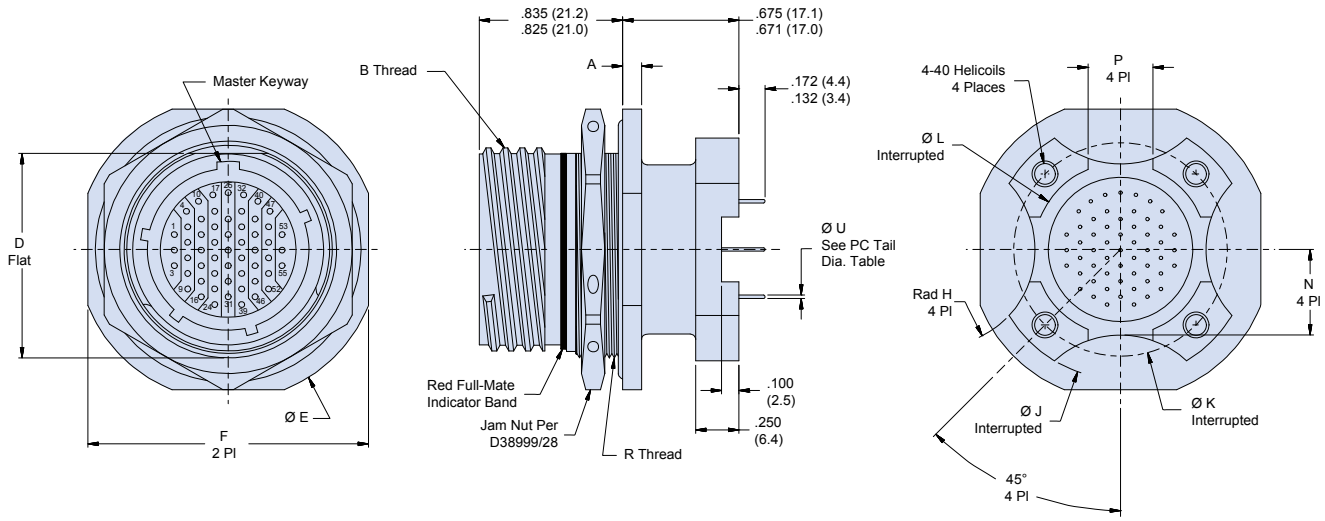

NOTES

1. Other filter styles (C-L, L-C, Unbalanced Pi, Multi-Stage, Multi-Value) are available, please consult the factory.

© 2022 Glenair, Inc • 1211 Air Way, Glendale, CA 91201 • 818-247-6000 • www.glenair.com • U.S. CAGE code 06324 • SuperNine® Catalog
Dimensions in Inches (millimeters) are subject to change without notice.

SuperNine® EMI/RFI filter

MIL-DTL-38999 Series III Type connectors

240-383E Dual flange jam nut receptacle connector

Connector Class			
Sym	**Class**	**Material**	**Finish Description**
ME	Environmental	Aluminum	Electroless Nickel
MT	Environmental	Aluminum	Ni-PTFE *1000 Hour Grey*™ Nickel Fluorocarbon Polymer
NF	Environmental	Aluminum	Cadmium O.D. Over Electroless Nickel
ZL	Environmental	Stainless Steel	Electro-Deposited Nickel
XM	Environmental	Composite	Electroless Nickel
XMT	Environmental	Composite	Ni-PTFE *1000 Hour Grey*™ Nickel Fluorocarbon Polymer
XW	Environmental	Composite	Cadmium O.D. Over Electroless Nickel
ZN	Environmental	Aluminum	Zinc-Nickel, Olive Drab
ZR	Environmental	Aluminum	Zinc Nickel, Black - RoHS
H2*	Hermetic	Stainless Steel	Electro-Deposited Nickel
*Some dimensions do not apply. See drawing 240-383EH2			

Dimensions												
Shell Size	**B Thread**	**D ±.005 (.13)**	**Ø E ±.012 (.30)**	**F ±.016 (.40)**	**P ±.010 (.25)**	**R Thread**	**Ø J ±.005 (.13)**	**Ø K Bsc**	**Ø L ±.005 (.13)**	**Rad H ±.020 (.51)**	**N ±.020 (.51)**	**A**
9	.6250-.1P-.3L-TS-2A	.650 (16.5)	1.189 (30.2)	1.063 (27.0)	.225 (5.7)	M17 X 1.0-6g 0.100R	1.016 (25.8)	.752 (19.1)	.532 (13.5)	.225 (5.7)	.275 (7.0)	.122 (3.1) .083 (2.1)
11	.7500-.1P-.3L-TS-2A	.750 (19.1)	1.374 (34.9)	1.252 (31.8)	.250 (6.4)	M20 X 1.0-6g 0.100R	1.062 (27.0)	.850 (21.6)	.595 (15.1)	.250 (6.4)	.290 (7.4)	.122 (3.1) .083 (2.1)
13	.8750-.1P-.3L-TS-2A	.937 (23.8)	1.500 (38.1)	1.374 (34.9)	.250 (6.4)	M25 X 1.0-6g 0.100R	1.250 (31.8)	.994 (25.2)	.720 (18.3)	.375 (9.5)	.370 (9.4)	.122 (3.1) .083 (2.1)
15	1.0000-.1P-.3L-TS-2A	1.061 (26.9)	1.626 (41.3)	1.500 (38.1)	.325 (8.2)	M28 X 1.0-6g 0.100R	1.375 (34.9)	1.119 (28.4)	.843 (21.4)	.438 (11.1)	.440 (11.2)	.122 (3.1) .083 (2.1)
17	1.1875-.1P-.3L-TS-2A	1.186 (30.1)	1.752 (44.5)	1.626 (41.3)	.375 (9.5)	M32 X 1.0-6g 0.100R	1.500 (38.1)	1.237 (31.4)	1.000 (25.4)	.562 (14.3)	.495 (12.6)	.122 (3.1) .083 (2.1)
19	1.2500-.1P-.3L-TS-2A	1.311 (33.3)	1.937 (49.2)	1.811 (46.0)	.500 (12.7)	M35 X 1.0-6g 0.100R	1.625 (41.3)	1.379 (35.0)	1.125 (28.6)	.875 (22.2)	.540 (13.7)	.154 (3.9) .114 (2.9)
21	1.3750-.1P-.3L-TS-2A	1.436 (36.5)	2.063 (52.4)	1.937 (49.2)	.562 (14.3)	M38 X 1.0-6g 0.100R	1.750 (44.5)	1.489 (37.8)	1.240 (31.5)	1.170 (29.7)	.625 (15.9)	.154 (3.9) .114 (2.9)
23	1.5000-.1P-.3L-TS-2A	1.561 (39.7)	2.189 (55.6)	2.063 (52.4)	.688 (17.5)	M41 X 1.0-6g 0.100R	1.875 (47.6)	1.619 (41.1)	1.328 (33.7)	1.250 (31.8)	.660 (16.8)	.154 (3.9) .114 (2.9)
25	1.6250-.1P-.3L-TS-2A	1.686 (42.8)	2.311 (58.7)	2.189 (55.6)	.750 (19.1)	M44 X 1.0-6g 0.100R	2.000 (50.8)	1.744 (44.3)	1.453 (36.9)	1.375 (34.9)	.740 (18.8)	.154 (3.9) .114 (2.9)

Capacitor Array Code Capacitance Range		
Class	**Pi - Circuit (pF)**	**C - Circuit (pF)**
X*	160,000 - 240,000	80,000 - 120,000
Y*	80,000 - 120,000	40,000 - 60,000
Z*	60,000 - 90,000	30,000 - 45,000
A	38,000 - 56,000	19,000 - 28,000
B	32,000 - 45,000	16,000 - 22,500
C	18,000 - 33,000	9,000 - 16,500
D	8,000 - 12,000	4,000 - 6,000
E	3,300 - 5,000	1,650 - 2,500
F	800 - 1,300	400 - 650
G	400 - 600	200 - 300
J	70-120	35-60
* Filter Classes X, Y and Z are 250 VDC. All others are 500 VDC		

PC Tail Dia	
Contact Size	**Ø U**
22D	.021 (0.53) .018 (0.46)
20	.031 (0.79) .029 (0.74)
16	.042 (1.07) .038 (0.97)
12	.096 (2.44) .092 (2.34)

Consult Factory for Additional Filter Types, TVS Diodes, and other Custom Configurations.

© 2022 Glenair, Inc • 1211 Air Way, Glendale, CA 91201 • 818-247-6000 • www.glenair.com • U.S. CAGE code 06324 • SuperNine® Catalog
Dimensions in Inches (millimeters) are subject to change without notice.

SuperNine® EMI/RFI filter

MIL-DTL-38999 Series III Type connectors

240-383B Filter connector adapter

SUPERNINE EMI/RFI FILTER CONNECTOR ADAPTER

Part Nmber Development									
Sample Part Number	**240-383**	**B**	**ME**	**15-35**	**PS**	**P**	**A**	**N**	**N**
Filter Connector	MIL-DTL-38999 Series III Type								
Shell Style	**B** = Connector Adapter								
Connector Class	See Connector Class Table								
Insert Arrangement*	IAW MIL-STD-1560.								
Contact Gender	**PS** = Pins, Plug Side **SP** = Sockets, Plug Side								
Filter Type	**P** = Pi Circuit **C** = C Circuit (See Note 1)								
Capacitance	See Capacitor Array Code Table								
Flange Mounting Style	**N** = Not Applicable								
Alternate Key Position*	**A**, **B**, **C**, **D**, **E**, **N** = Normal, **U** = Universal								

*Refer to Section A for complete details

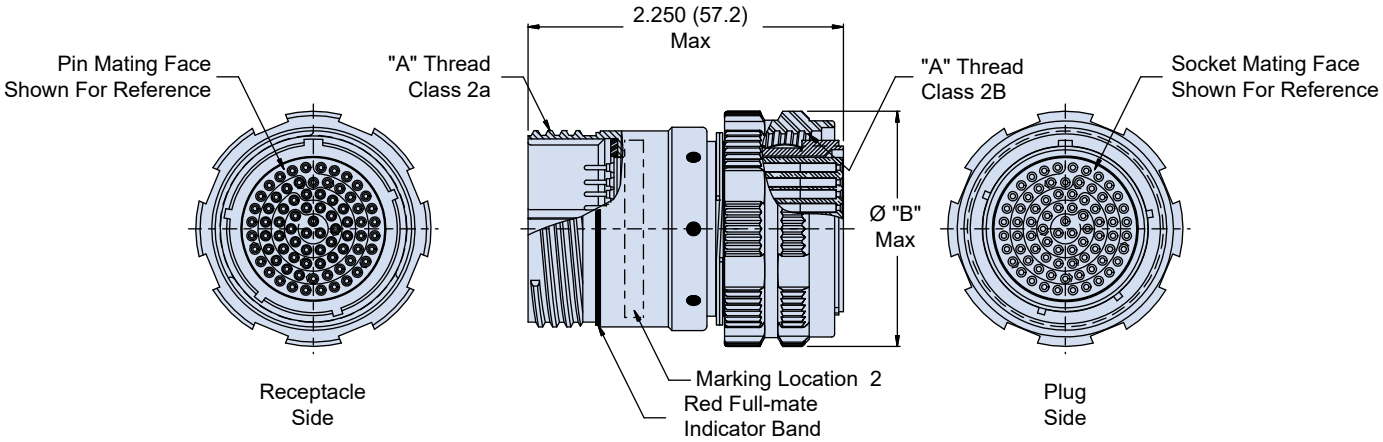

NOTES

1. Other filter styles (C-L, L-C, Unbalanced Pi, Multi-Stage, Multi-Value) are available, please consult the factory.
2. Please consult the factory for Pin/Pin and/or Socket/Socket contact arrangements
3. Do not mate Universal key position with another Universal

© 2022 Glenair, Inc • 1211 Air Way, Glendale, CA 91201 • 818-247-6000 • www.glenair.com • U.S. CAGE code 06324 • SuperNine® Catalog
Dimensions in Inches (millimeters) are subject to change without notice.

SuperNine® EMI/RFI filter

MIL-DTL-38999 Series III Type connectors

240-383B Filter connector adapter

Connector Class			
Sym	**Class**	**Material**	**Finish Description**
ME	Environmental	Aluminum	Electroless Nickel
MT	Environmental	Aluminum	Ni-PTFE *1000 Hour Grey*™ Nickel Fluorocarbon Polymer
NF	Environmental	Aluminum	Cadmium O.D. Over Electroless Nickel
ZL	Environmental	Stainless Steel	Electro-Deposited Nickel
ZN	Environmental	Aluminum	Zinc-Nickel, Olive Drab
ZR	Environmental	Aluminum	Zinc Nickel, Black - RoHS

Dimensions		
Shell Size	**A Thread Class 2**	**Ø B Max**
9	.6250- .1P- .3L-TS	.858 (21.8)
11	.7500- .1P- .3L-TS	.984 (25.0)
13	.8750- .1P- .3L-TS	1.157 (29.4)
15	1.000- .1P- .3L-TS	1.280 (32.5)
17	1.1875- .1P- .3L-TS	1.406 (35.7)
19	1.2500- .1P- .3L-TS	1.516 (38.5)
21	1.3750- .1P- .3L-TS	1.642 (41.7)
23	1.5000- .1P- .3L-TS	1.768 (44.9)
25	1.6250- .1P- .3L-TS	1.890 (48.0)

Capacitor Array Code Capacitance Range		
Class	**Pi - Circuit (pF)**	**C - Circuit (pF)**
X*	160,000 - 240,000	80,000 - 120,000
Y*	80,000 - 120,000	40,000 - 60,000
Z*	60,000 - 90,000	30,000 - 45,000
A	38,000 - 56,000	19,000 - 28,000
B	32,000 - 45,000	16,000 - 22,500
C	18,000 - 33,000	9,000 - 16,500
D	8,000 - 12,000	4,000 - 6,000
E	3,300 - 5,000	1,650 - 2,500
F	800 - 1,300	400 - 650
G	400 - 600	200 - 300
J	70-120	35-60
* Filter Classes X, Y and Z are 250 VDC. All others are 500 VDC		

Consult Factory for Additional Filter Types, TVS Diodes, and other Custom Configurations.

© 2022 Glenair, Inc • 1211 Air Way, Glendale, CA 91201 • 818-247-6000 • www.glenair.com • U.S. CAGE code 06324 • SuperNine® Catalog
Dimensions in Inches (millimeters) are subject to change without notice.

SERIES 23
FIBER OPTIC CONNECTORS



SuperNine®

MIL-DTL-38999 Series III Type fiber optic connectors, termini and accessories



MIL-DTL-38999 type fiber optic interconnection systems are the recognized standard for all military and commercial aerospace applications that depend on high levels of connector reliability, environmental and mechanical performance and low dB insertion loss. Designed specifically for avionics applications, the Glenair tight-tolerance SuperNine® fiber optic connection system has been successfully deployed in applications ranging from the F-35 Joint Strike Fighter and the venerable F-22 to dozens of other fixed wing and rotary aircraft applications. Ultra-lightweight composite thermoplastic connectors deliver years of reliable service, free from the destructive effects of corrosion and less susceptible to vibration and shock when compared to conventional metal connectors.

- **Ultralightweight composite thermoplastic connector solution**
- **Qualified size 16 MIL-PRF-29504 pin-socket precision ceramic termini**
- **Ultra tight tolerance shell and cavity dimensions for precise axial alignment**
- **Ultra low insertion loss values for both singlemode and multimode**
- **From 2 to 37 Insert arrangements**

Glenair®

Glenair, Inc.
1211 Air Way
Glendale, CA 91201-2497
818-247-6000
sales@glenair.com
www.glenair.com

ADVANCED PERFORMANCE

SuperNine® Fiber optics

MIL-DTL-38999 Series III Type

Product Selection Guide

SuperNine® MIL-DTL-38999 Series III Type Fiber Optic Termini

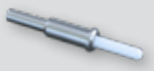

181-002 • M29504/04 Style 1 G-6
Pin terminus, size 16



181-001 • M29504/05 Style 1 G-7
Socket terminus, size 16

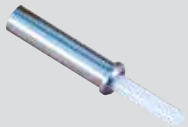

181-010 • M29504/04 Style 2 G-8
Socket terminus, size 16



181-009 • M29504/05 Style 2 G-9
Socket terminus, size 16



181-036 M29504/04 Style 2 G-10
Large core fiber pin terminus, size 16



181-035 M29504/05 Style 2 G-11
Large core fiber socket terminus, size 16



181-052 M29504/04 Style 2 G-12
Jewel pin terminus, size 16



181-053 M29504/05 Style 2 G-13
Jewel socket terminus, size 16



181-065 G-14
Pin terminus, size 20



181-066 G-15
Socket Terminus, Size 20

SuperNine® MIL-DTL-38999 Series III Type Pin and Socket Accessories



181-048-16 G-16
Dummy sealing plug, size 16



187-019 G-16
Pin/socket terminus dust cap, Size 16



187-029 G-17
Socket hood dust cap, size 16



187-266 G-17
Socket terminus dust cap, size 20

© 2022 Glenair, Inc • 1211 Air Way, Glendale, CA 91201 • 818-247-6000 • www.glenair.com • U.S. CAGE code 06324 • SuperNIne® Catalog
Dimensions in Inches (millimeters) are subject to change without notice.

SuperNine® Fiber optics

MIL-DTL-38999 Series III Type

Product Selection Guide

SuperNine® MIL-DTL-38999 Series III Type Fiber Optic Connectors

SuperNine Fiber Optic D38999
Insert arrangements G-3
Panel cutout dimentions G-4
Alternate key polarizations G-5



180-091 (06) G-18
In-line plug connector



180-091 (05) G-19
In-line receptacle connector



180-091 (08) G-20
Jam-nut mount receptacle connector



180-091 (H7) G-21
Wall mount receptacle connector, round holes (std)



180-091 (S7) G-22
Wall mount receptacle connector, slotted holes



180-091 (T7) G-23
Wall mount receptacle connector, threaded holes



660–023/024, 660–049/050 G-24
threaded protective covers, metal and composite

SuperNine® MIL-DTL-38999 Series III Type Fiber Optic ASAP Cordsets



FO1000 G-29
Fiber optic cable sets – neoprene or viton® rugged overmolded cables



FO1001 G-31
Fiber optic cable sets – plastic or metal core conduit



FO1002 G-33
Fiber optic cable sets – field repairable banding backshell assembly

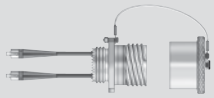

FO1003 G-35
Fiber optic cable sets – inside-the-box receptacle / pigtail assembly



FO1004 G-37
Fiber optic cable sets – inside the box receptacle / pigtail assembly with FiberCon® backshell



FO1005 G-39
Fiber optic cable sets – inside the box receptacle / pigtail assembly and backshell

© 2022 Glenair, Inc • 1211 Air Way, Glendale, CA 91201 • 818-247-6000 • www.glenair.com • U.S. CAGE code 06324 • SuperNine® Catalog
Dimensions in Inches (millimeters) are subject to change without notice.

MIL-DTL-38999 TYPE ADVANCED FIBER OPTIC CONNECTORS - INSERT ARRANGEMENTS





Contact Legend
#20 ⊖ #16 ⊕



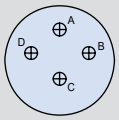

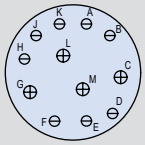

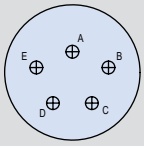

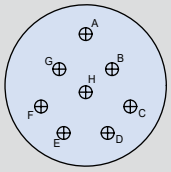

Insert Arrangement	11-2	13-4	15-97		15-5	17-8
No. of Contacts	2	4	4	8	5	8
Contact Size	#16	#16	#16	#20	#16	#16

Contact Legend
#20 ⊖ #16 ⊕

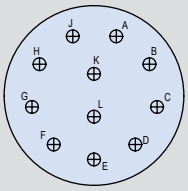

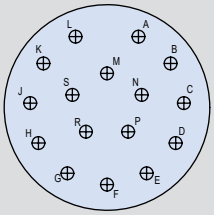

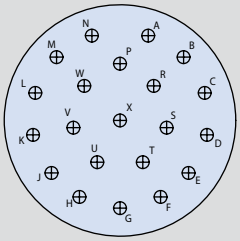

Insert Arrangement	19-11	21-16	23-21
No. of Contacts	11	16	21
Contact Size	#16	#16	#16

Contact Legend
#20 ⊖ #16 ⊕

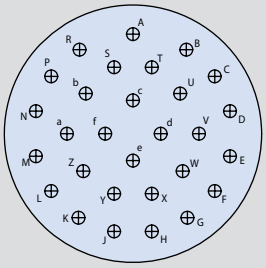

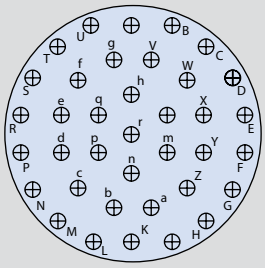

Insert Arrangement	25-29	25-37
No. of Contacts	29	37
Contact Size	#16	#16

© 2022 Glenair, Inc • 1211 Air Way, Glendale, CA 91201 • 818-247-6000 • www.glenair.com • U.S. CAGE code 06324 • SuperNIne® Catalog
Dimensions in Inches (millimeters) are subject to change without notice.

Reference information - panel cutout dimensions

Panel cutout dimensions

DIMENSIONS								
Shell Size Code	Shell Size	Ø AA	BB Flat	Ø M Min	ØN Min	Ø P Holes	R1 BSC	R2 BSC
B	11	.835 (21.2) .825 (21.0)	.771 (19.6) .761 (19.3)	.796 (20.2)	.625 (15.9)	.133 (3.4) .123 (3.1)	.812 (20.6)	.719 (18.3)
C	13	1.020 (25.9) 1.010 (25.7)	.955 (24.3) .945 (24.0)	.922 (23.4)	750 (19.1)	.133 (3.4) .123 (3.1)	.906 (23.0)	.812 (20.6)
D	15	1.145 (29.1) 1.135 (28.8)	1.085 (27.6) 1.075 (27.3)	1.047 (26.6)	.906 (23.0)	.133 (3.4) .123 (3.1)	.969 (24.6)	.906 (23.0)
E	17	1.270 (32.3) 1.260 (32.0)	1.210 (30.7) 1.200 (30.5)	1.219 (31.0)	1.016 (25.8)	.133 (3.4) .123 (3.1)	1.062 (27.0)	.969 (24.6)
F	19	1.395 (35.4) 1.385 (35.2)	1.335 (33.9) 1.325 (33.7)	1.297 (32.9)	1.141 (29.0)	.133 (3.4) .123 (3.1)	1.156 (29.4)	1.062 (27.0)
G	21	1.520 (38.6) 1.510 (38.4)	1.460 (37.1) 1.450 (36.8)	1.422 (36.1)	1.266 (32.2)	.133 (3.4) .123 (3.1)	1.250 (31.8)	1.156 (29.4)
H	23	1.645 (41.8) 1.635 (41.5)	1.585 (40.3) 1.575 (40.0)	1.547 (39.3)	1.375 (34.9)	.159 (4.0) .149 (3.8)	1.375 (34.9)	1.250 (31.8)
J	25	1.770 (45.0) 1.760 (44.7)	1.710 (43.4) 1.700 (43.2)	1.672 (42.5)	1.484 (37.7)	.155 (3.9) .145 (3.7)	1.500 (38.1)	1.375 (34.9)

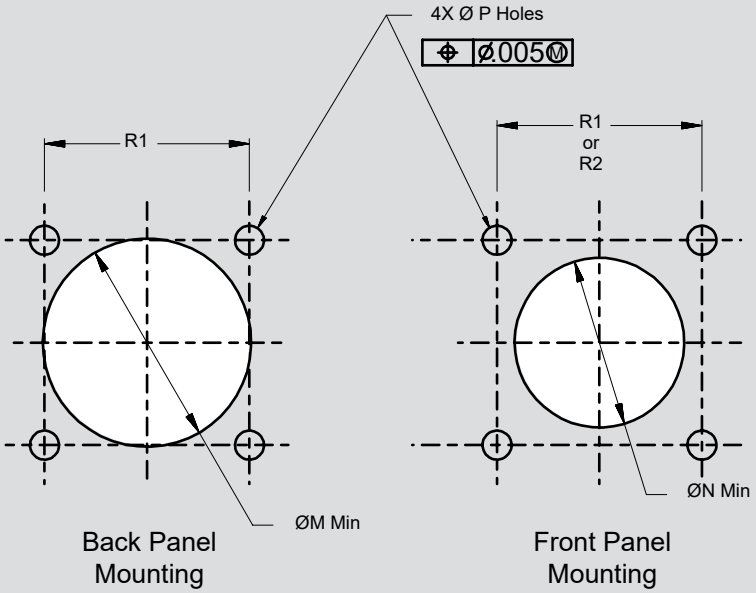

Recommended Panel Cutout
Wall Mount Receptacle

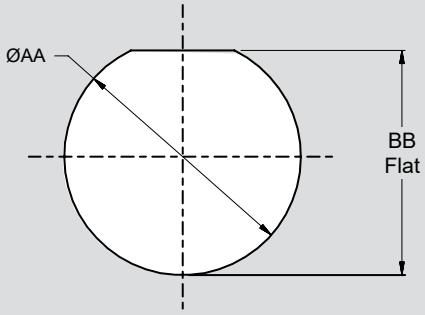

Recommended Panel Cutout
Jam Nut Receptacle

© 2022 Glenair, Inc • 1211 Air Way, Glendale, CA 91201 • 818-247-6000 • www.glenair.com • U.S. CAGE code 06324 • SuperNine® Catalog
Dimensions in Inches (millimeters) are subject to change without notice.

Alternate key polarizations

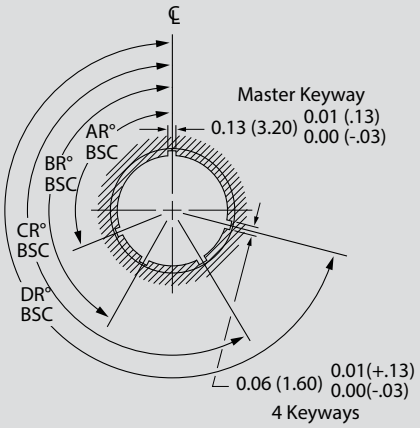

Alternate Key and Keyway Receptacles

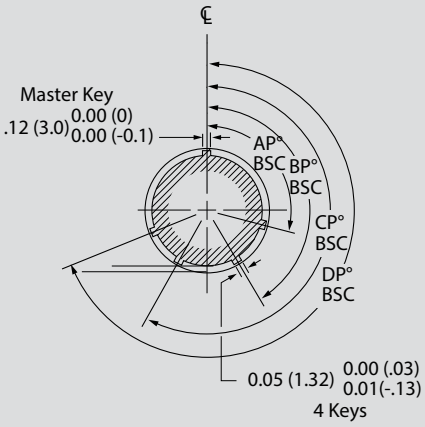

Alternate Key and Keyway Plugs

ALTERNATE KEY AND KEYWAY POLARIZATION					
Shell Size	Key and Keyway Code	AR° or AP° BSC	BR° or BP° BSC	CR° or CP° BSC	DR° or DP° BSC
9	N	105	140	215	265
	A	102	132	248	320
	B	80	118	230	312
	C	35	140	205	275
	D	64	155	234	304
	E	91	131	197	240
11 13 15	N	95	141	208	236
	A	113	156	182	292
	B	90	145	195	252
	C	53	156	220	255
	D	119	146	176	298
	E	51	141	184	242
17 19 21 23 25	N	80	142	196	293
	A	135	170	200	310
	B	49	169	200	244
	C	66	140	200	257
	D	62	145	180	280
	E	79	153	197	272

© 2022 Glenair, Inc • 1211 Air Way, Glendale, CA 91201 • 818-247-6000 • www.glenair.com • U.S. CAGE code 06324 • SuperNIne® Catalog
Dimensions in Inches (millimeters) are subject to change without notice.

SuperNine® Fiber optics

MIL-DTL-38999 Series III Type

181-002 • M29504/04 fiber optic pin terminus, size 16

M29504/04 TYPE, STYLE 1 PIN TERMINUS FOR MIL-DTL-38999 SERIES III



Part Number	Fiber Size Core/Cladding/Coating (Microns)	Ø A (Microns)	Ref. M29504/04-XXXX
181-002-125	9/125 (Singlemode)	125.5	M29504/04-4208
181-002-126S	9/125 (Singlemode)	126.0	M29504/04-4209
181-002-126	50/125 & 62.5/125	126.0	M29504/04-4210
181-002-127	50/125 & 62.5/125	127.0	M29504/04-4040
181-002-142	100/140	142.0	M29504/04-4043
181-002-144	100/140	144.0	N/A
181-002-145	100/140	145.0	M29504/04-4044
181-002-156	62.5/125/155 (Polyimide)	156.0	M29504/04-4211
181-002-157	62.5/125/155 (Polyimide)	157.0	M29504/04-4212
181-002-173	100/140/172 (Polyimide)	173.0	M29504/04-4087
181-002-175	100/140/172 (Polyimide)	175.0	M29504/04-4213
181-002-231	200/230	231.0	N/A
181-002-236	200/230	236.0	N/A
181-002-286	200/280	286.0	N/A
181-002-448	400/440	448.0	N/A
181-002-533	486/500	533.0	N/A

Consult factory for additional sizes and QPL status

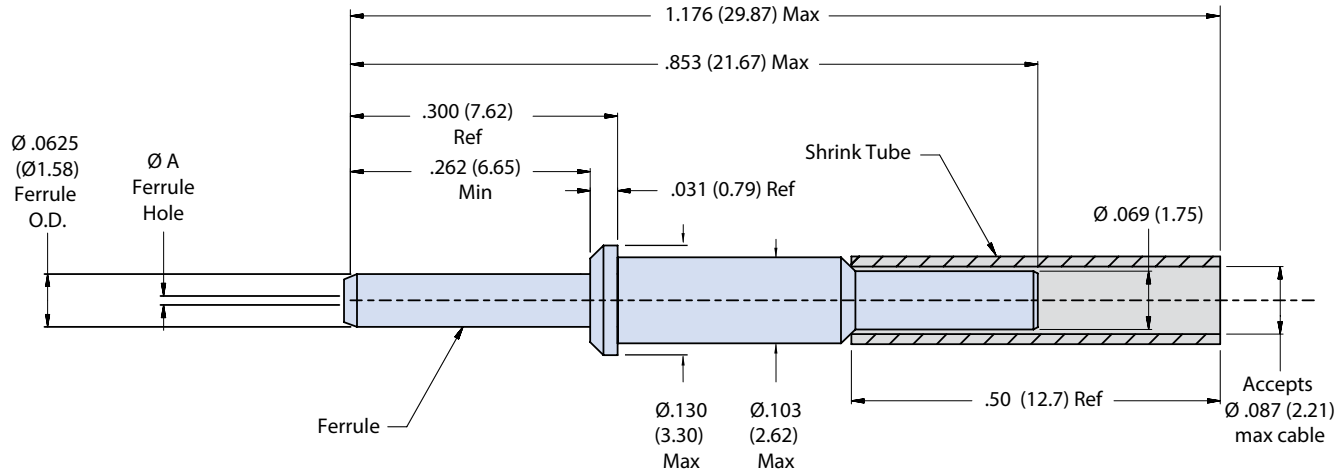

NOTES

1. See Glenair assembly procedure GAP-015 for termination instructions.
2. Insertion/extraction tool: M81969/14-03
3. For ferrule dust cap use P/N 187-019
4. Hand polishing tool: 182-001P or 182-001PW
5. Material/finish
   - Ferrule: zirconia ceramic
   - Terminus assembly: stainless steel/passivate
   - Shrink tube: kynar

© 2022 Glenair, Inc • 1211 Air Way, Glendale, CA 91201 • 818-247-6000 • www.glenair.com • U.S. CAGE code 06324 • SuperNine® Catalog
Dimensions in Inches (millimeters) are subject to change without notice.

SuperNine® Fiber optics

MIL-DTL-38999 Series III Type

181-001 • M29504/05 fiber optic socket terminus, size 16

M29504/05 TYPE, STYLE 1 SOCKET TERMINUS FOR MIL-DTL-38999 SERIES III



Part Number	Fiber Size Core/Cladding/Coating (Microns)	Ø A (Microns)	Ref. M29504/05-XXXX
181-001-125	9/125 (Singlemode)	125.5	M29504/05-4237
181-001-126S	9/125 (Singlemode)	126.0	M29504/05-4238
181-001-126	50/125 & 62.5/125	126.0	M29504/05-4239
181-001-127	50/125 & 62.5/125	127.0	M29504/05-4046
181-001-142	100/140	142.0	M29504/05-4049
181-001-144	100/140	144.0	N/A
181-001-145	100/140	145.0	M29504/05-4050
181-001-156	62.5/125/155 (Polyimide)	156.0	M29504/05-4240
181-001-157	62.5/125/155 (Polyimide)	157.0	M29504/05-4241
181-001-173	100/140/172 (Polyimide)	173.0	M29504/05-4088
181-001-175	100/140/172 (Polyimide)	175.0	M29504/05-4242
181-001-231	200/230	231.0	N/A
181-001-236	200/230	236.0	N/A
181-001-286	200/280	286.0	N/A
181-001-448	400/440	448.0	N/A
181-001-533	486/500	533.0	N/A

Consult factory for additional sizes and QPL status

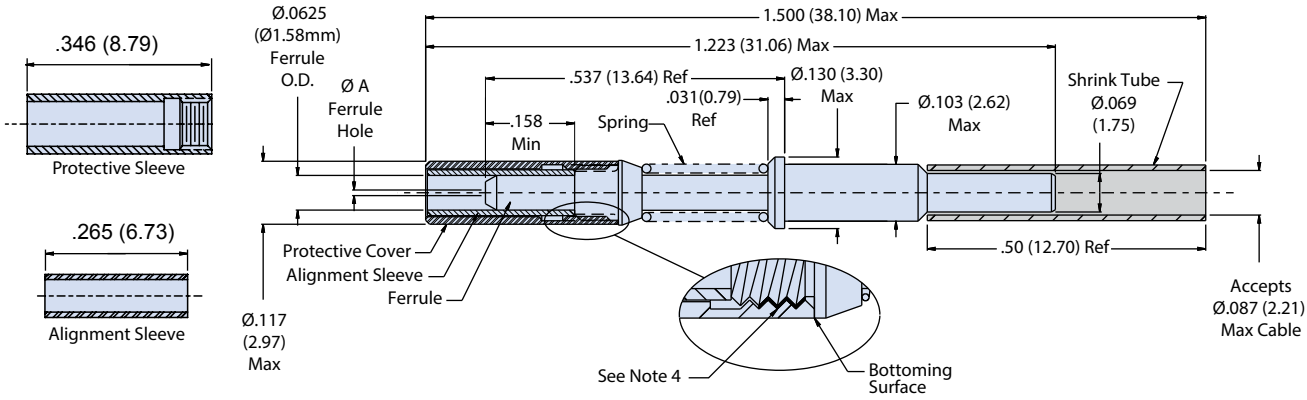

Ceramic alignment sleeve supplied with terminus. Add **K** to the end of part number development to supply with optional stainless steel alignment sleeve *e.g. 181-001-126**K***.

ACCESSORIES	
Part Number	**Description**
181-001-S	Alignment Sleeve, Split Ceramic (standard)
181-001-K	Alignment Sleeve, Split Stainless Steel
181-001-C	Protective cover

NOTES

1. Alignment sleeve & protective cover are supplied with terminus and may be ordered separately (see accessories table).
2. Insertion/extraction tool: P/N M81969/14-03 or equivalent
3. For socket dust cap use part number 187-019 over ferrule and 187-029 over protective cover
4. Threaded protective cover must be retained using threadlocker "loctite 222" prior to insertion into connector. See Glenair assembly procedure GAP-015 for termination instructions
5. Hand polishing tool: 182-001S or 182-001SW
6. Material/Finish
   - Ferrule: zirconia ceramic
   - Alignment sleeve: zirconia ceramic or stainless steel/passivate.
   - Terminus body, spring, cover: stainless steel/passivate
   - Shrink tube: kynar

© 2022 Glenair, Inc • 1211 Air Way, Glendale, CA 91201 • 818-247-6000 • www.glenair.com • U.S. CAGE code 06324 • SuperNIne® Catalog

Dimensions in Inches (millimeters) are subject to change without notice.

M29504/04 TYPE, STYLE 2 PIN TERMINUS FOR MIL-DTL-38999 SERIES III



Part Number	Fiber Size Core/Cladding/Coating (Microns)	Ø A (Microns)	Ref. M29504/04-XXXX
181-010-125	9/125 (Singlemode)	125.5	M29504/04-4218
181-010-126S	9/125 (Singlemode)	126.0	M29504/04-4219
181-010-126	50/125 & 62.5/125	126.0	M29504/04-4220
181-010-127	50/125 & 62.5/125	127.0	M29504/04-4221
181-010-142	100/140	142.0	M29504/04-4224
181-010-145	100/140	145.0	M29504/04-4225
181-010-156	62.5/125/155 (Polyimide)	156.0	M29504/04-4222
181-010-157	62.5/125/155 (Polyimide)	157.0	M29504/04-4223
181-010-173	100/140/172 (Polyimide)	173.0	M29504/04-4226
181-010-175	100/140/172 (Polyimide)	175.0	M29504/04-4227
181-010-231	200/230	231.0	N/A
181-010-233	200/230	233.0	N/A
181-010-236	200/230	236.0	N/A
181-010-286	200/280	286.0	N/A
181-010-448	400/440	448.0	N/A

Consult factory for additional sizes and QPL status

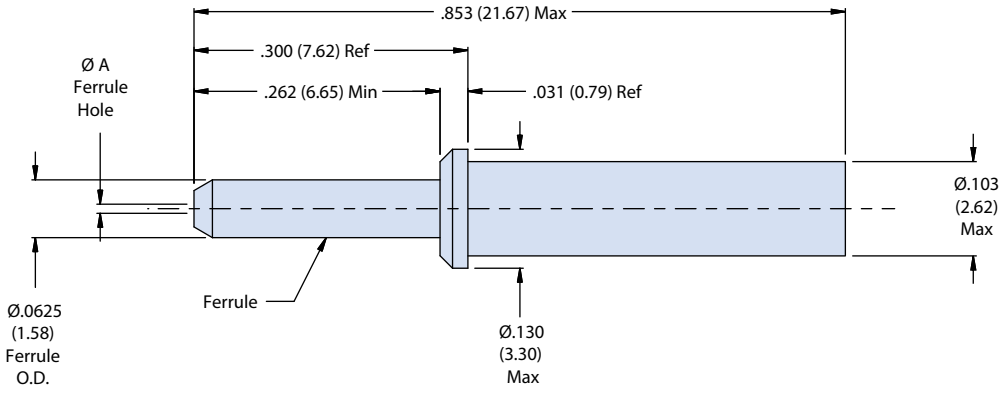

NOTES

1. See Glenair assembly procedure GAP-019 for termination instructions.
2. Insertion/extraction tool: M81969/14-03
3. For ferrule dust cap use P/N 187-019
4. Hand polishing tool: 182-001P or 182-001PW
5. Material/Finish
   - Ferrule: zirconia ceramic
   - Terminus assembly: stainless steel/passivate

© 2022 Glenair, Inc • 1211 Air Way, Glendale, CA 91201 • 818-247-6000 • www.glenair.com • U.S. CAGE code 06324 • SuperNine® Catalog
Dimensions in Inches (millimeters) are subject to change without notice.

181-009 • M29504/05 fiber optic socket terminus, size 16

M29504/05 TYPE, STYLE 2 SOCKET TERMINUS FOR MIL-DTL-38999 SERIES III



Part Number	Fiber Size Core/Cladding/Coating (Microns)	Ø A (Microns)	Ref. M29504/05-XXXX
181-009-125	9/125 (Singlemode)	125.5	M29504/05-4247
181-009-126S	9/125 (Singlemode)	126.0	M29504/05-4248
181-009-126	50/125 & 62.5/125	126.0	M29504/05-4249
181-009-127	50/125 & 62.5/125	127.0	M29504/05-4250
181-009-142	100/140	142.0	M29504/05-4253
181-009-145	100/140	145.0	M29504/05-4254
181-009-156	62.5/125/155 (Polyimide)	156.0	M29504/05-4251
181-009-157	62.5/125/155 (Polyimide)	157.0	M29504/05-4252
181-009-173	100/140/172 (Polyimide)	173.0	M29504/05-4255
181-009-175	100/140/172 (Polyimide)	175.0	M29504/05-4256
181-009-231	200/230	231.0	N/A
181-009-236	200/230	236.0	N/A
181-009-286	200/280	286.0	N/A
181-009-448	400/440	448.0	N/A

Consult factory for additional sizes and QPL status

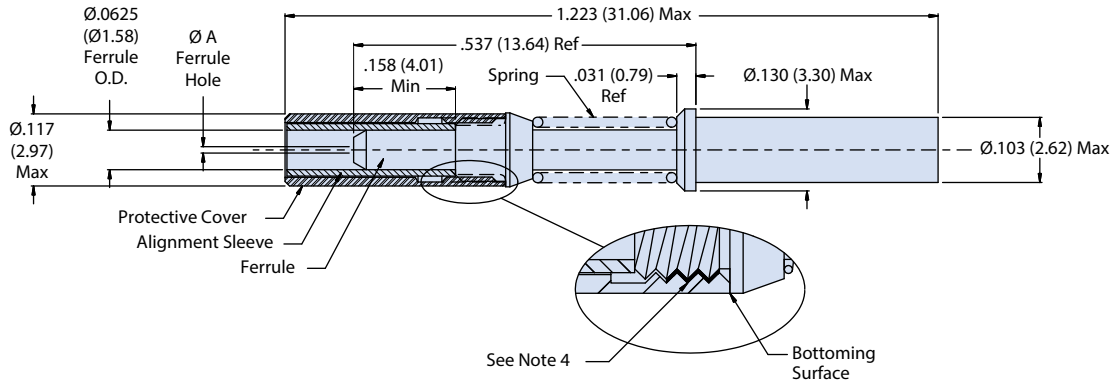

Accessories	
Part Number	**Description**
181-001-S	Alignment Sleeve, Split Ceramic (standard)
181-001-K	Alignment Sleeve, Split Stainless Steel
181-001-C	Protective cover

NOTES

1. Insertion/extraction tool: M81969/14-03
2. Threaded protective cover must be retained using "Threadlocker Loctite 222" prior to insertion into connector. See Glenair assembly procedure GAP-019 for termination instructions
3. For socket dust cap use part number
   187-019 over ferrule and
   187-029 over protective cover
4. Alignment sleeve and protective cover are supplied with terminus and may be ordered separately (see accessories table)
5. Hand polishing tool: 182-001S or 182-001SW
6. Material/finish
   - Ferrule: zirconia ceramic
   - Alignment sleeve: zirconia ceramic or stainless steel/passivate
   - Terminus body, spring and cover: stainless steel/passivate

SuperNine® Fiber optics

MIL-DTL-38999 Series III Type

181-036 large-core optical fiber terminus, size 16

M29504/04 TYPE, STYLE 2 LARGE CORE METAL FERRULE PIN TERMINUS FOR MIL-DTL-38999 SERIES III



Part Number	Fiber Size Core/Cladding (Microns)	Ø A (Microns)
181-036-600	600 Micron	610.0
181-036-1000	1000 Micron (Plastic)	1117.0

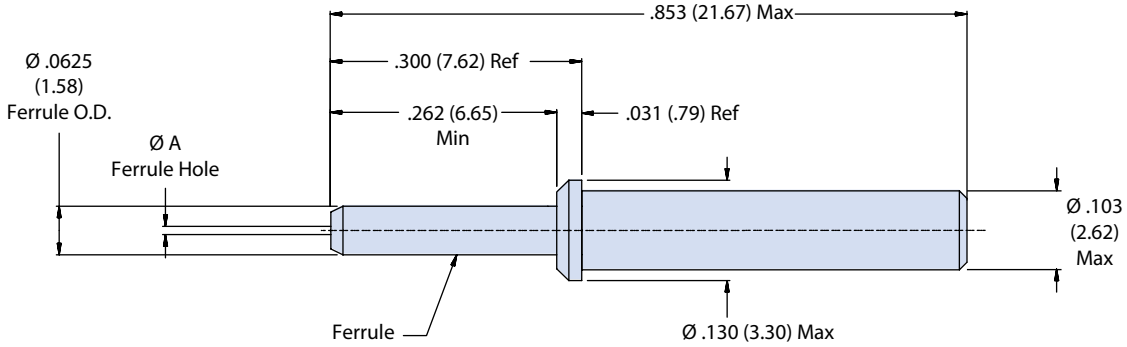

NOTES

1. Contact Glenair for termination/assembly procedures.
2. Insertion/Extraction Tool: P/N M81969/14-03.
3. For ferrule dust cap use P/N 187-019.
4. Material/Finish:
   - Ferrule and terminus body: stainless steel/passivate

© 2022 Glenair, Inc • 1211 Air Way, Glendale, CA 91201 • 818-247-6000 • www.glenair.com • U.S. CAGE code 06324 • SuperNine® Catalog
Dimensions in Inches (millimeters) are subject to change without notice.

M29504/05 TYPE, STYLE 2 LARGE CORE METAL FERRULE SOCKET TERMINUS FOR MIL-DTL-38999 SERIES III



Part Number	Fiber Size Core/Cladding (Microns)	ØA (Microns)
181-035-600	600 Micron	610.0
181-035-1000	1000 Micron (Plastic)	1117.0
Ceramic alignment sleeve supplied with terminus. Add K to the end of part number development to supply with optional stainless steel alignment sleeve *e.g. 181-035-1000**K**.*		

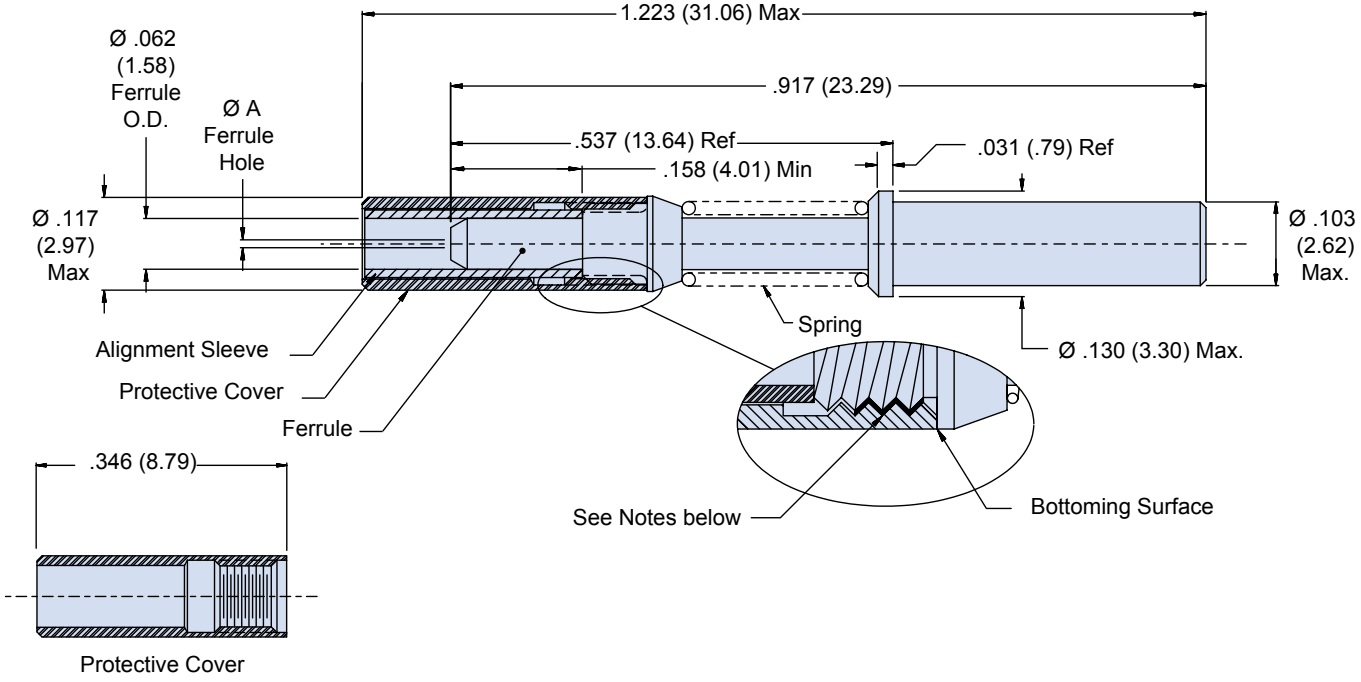

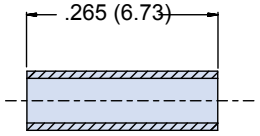

Accessories	
Part Number	**Description**
181-001-S	Alignment Sleeve, Split Ceramic (standard)
181-001-K	Alignment Sleeve, Split Stainless Steel
181-001-C	Protective cover

NOTES

1. Alignment sleeve and protective cover are supplied with terminus and may be ordered separately (see accessories table)
2. Threaded protective cover must be retained using "Threadlocker Loctite 222" prior to insertion and fully seated against terminus body as shown. Contact Glenair for termination/assembly procedures.
3. Insertion/extraction Tool: P/N M81969/14-03
4. For socket dust cap use part number
   187-019 over ferrule and
   187-029 over protective cover
5. Material/finish:
   - Ferrule: stainless steel/passivate
   - Alignment sleeve: zirconia ceramic or stainless steel/passivate
   - Terminus assembly, spring and cover: stainless steel/passivate

© 2022 Glenair, Inc • 1211 Air Way, Glendale, CA 91201 • 818-247-6000 • www.glenair.com • U.S. CAGE code 06324 • SuperNIne® Catalog
Dimensions in Inches (millimeters) are subject to change without notice.

SuperNine® Fiber optics

MIL-DTL-38999 Series III Type

181-052 fiber optic jewel pin terminus, size 16

M29504/4 TYPE, STYLE 2 FIBER OPTIC JEWEL PIN TERMINUS FOR MIL-DTL-38999 SERIES III



Part Number	Ferrule Hole Ø A (Microns)	Typical Fiber Size Core/Cladding/Coating (Microns)
181-052-125	125.0	9/125 (Singlemode)
181-052-127	127.0	50/125, 62.5/125
181-052-142	142.0	100/140
181-052-157	157.0	62.5/125/155 (Polyimide)
181-052-175	175.0	100/140/172 (Polyimide)
181-052-236	236.0	200/230
Add ***L*** to the end of part number development to supply less epoxy preforms *e.g. 181-052-127**L***. Omit to include preforms.		

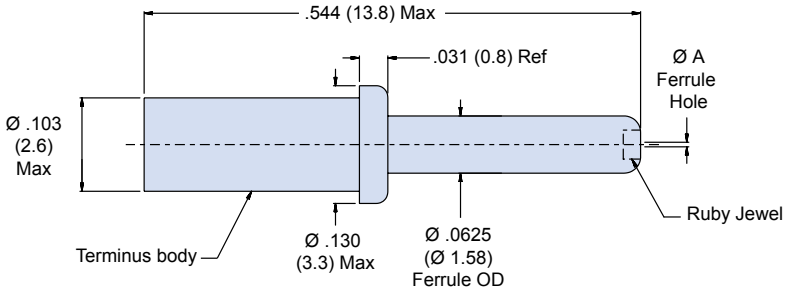

NOTES

1. Insertion/extraction tool: M81969/14-03
2. For ferrule dust cap use P/N 187-019
3. Material/Finish:
   - Terminus body: stainless steel/passivate
   - Jewel, ruby: synthetic ruby or sapphire

Terminus Accessories	
Part Number	**Description**
189-070-6	Reducing Sleeve, Ø1.90mm Max Cable Jacket
181-052-E	Epoxy Preforms

© 2022 Glenair, Inc • 1211 Air Way, Glendale, CA 91201 • 818-247-6000 • www.glenair.com • U.S. CAGE code 06324 • SuperNine® Catalog
Dimensions in Inches (millimeters) are subject to change without notice.

SuperNine® Fiber optics

MIL-DTL-38999 Series III Type

181-053 fiber optic jewel socket terminus, size 16

M29504/05 TYPE FIBER OPTIC JEWEL SOCKET TERMINUS



Part Number	Ferrule Hole Ø A (Microns)	Typical Fiber Size Core/Cladding/Coating (Microns)
181-053-125	125.0	9/125 (Singlemode)
181-053-127	127.0	50/125, 62.5/125
181-053-142	142.0	100/140
181-053-157	157.0	62.5/125/155 (Polyimide)
181-053-175	175.0	100/140/172 (Polyimide)
181-053-236	236.0	200/230
Add L to the end of part number development to supply less epoxy preforms *e.g. 181-053-127**L***. Omit to include preforms.		

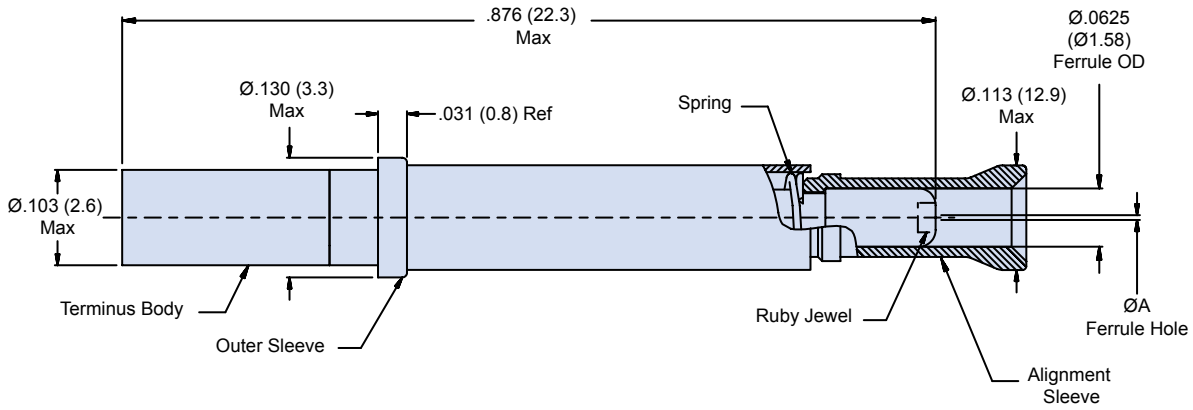

NOTES

1. Alignment Sleeve, Outer Sleeve, and Spring packaged loose with assembly.
2. Insertion/extraction tool: M81969/14-03 or equivalent.
3. For socket dust cap use part number
   187-019 over ferrule and
   187-029 over alignment sleeve
4. Material/finish:
   - Terminus body: stainless steel/passivate
   - Jewel/ruby: synthetic ruby or sapphire
   - Alignment sleeve: stainless steel/passivate
   - Outer sleeve: stainless steel/passivate
   - Spring: stainless steel/passivate

Terminus Accessories	
Part Number	**Description**
189-070-6	Reducing Sleeve Ø1.90mm Max Cable Jacket
189-075	Alignment Sleeve
182-031	Alignment Sleeve Installation Tool
182-032	Alignment Sleeve Extraction Tool
181-053-E	Epoxy Preforms

© 2022 Glenair, Inc • 1211 Air Way, Glendale, CA 91201 • 818-247-6000 • www.glenair.com • U.S. CAGE code 06324 • SuperNIne® Catalog
Dimensions in Inches (millimeters) are subject to change without notice.

SuperNine® Fiber optics

MIL-DTL-38999 Series III Type

181-065 fiber optic pin terminus, size 20

SIZE 20 PIN TERMINUS FOR MIL-DTL-38999 SERIES III



Part Number	Fiber Size Core/Cladding (Microns)	ØA (Microns)	Typ. Fiber Type
181-065-1255	9/125	125.5	Singlemode
181-065-126	50/125 & 62.5/125	126.0	Multimode

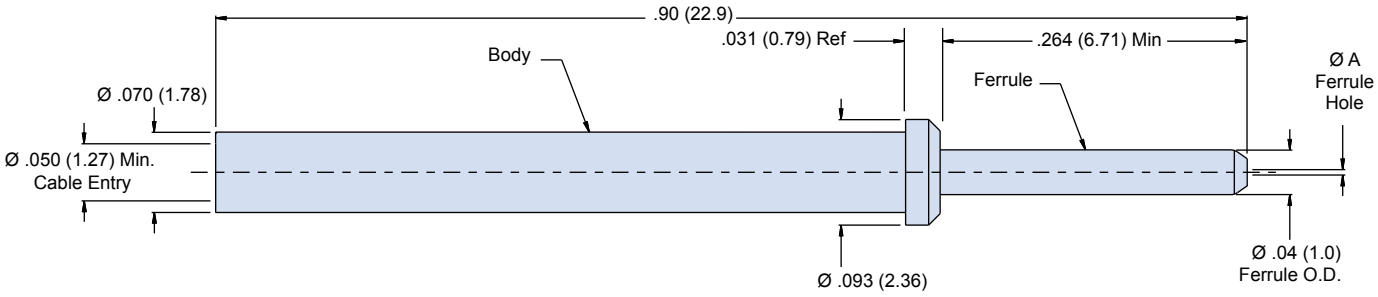

NOTES

1. Consult factory for appropriate termination and assembly tools/procedures.
2. For dust cap use P/N 187-266
3. Material and Finish:
   - Ferrule: Zirconia Ceramic
   - Body: Copper-Nickel-Zinc Alloy

© 2022 Glenair, Inc • 1211 Air Way, Glendale, CA 91201 • 818-247-6000 • www.glenair.com • U.S. CAGE code 06324 • SuperNine® Catalog
Dimensions in Inches (millimeters) are subject to change without notice.

SuperNine® Fiber optics

MIL-DTL-38999 Series III Type

181-066 fiber optic socket terminus, size 20

SIZE 20 SOCKET TERMINUS FOR MIL-DTL-38999 SERIES III



Part Number	Fiber Size Core/Cladding	Ø A (Microns)	Typ. Fiber Type
181-066-1255	9/125	125.5	Singlemode
181-066-126	50/125 & 62.5/125	126.0	Multimode

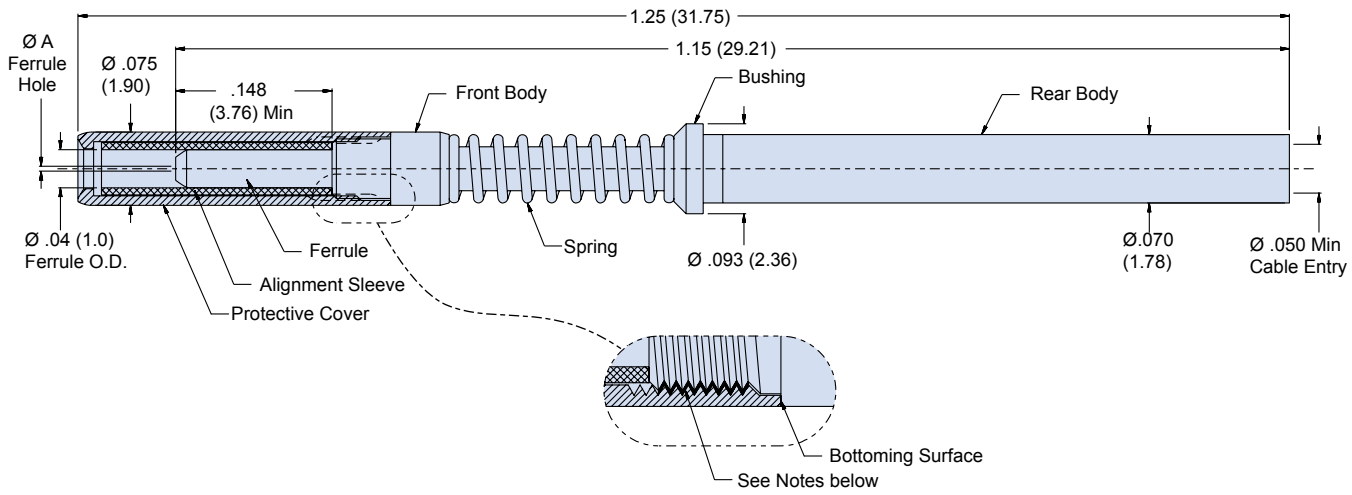

NOTES

1. Protective cover must be retained using "Threadlocker Loctite 222" prior to insertion and fully seated against terminus body as shown.
2. Consult factory for appropriate termination and assembly tools/procedures
3. For dust cap use P/N 187-266
4. Material/finish
   - Ferrule: zirconia ceramic
   - Alignment sleeve: zirconia ceramic
   - Body (front and rear): copper-nickel-zinc alloy
   - Protective cover: copper-nickel-zinc alloy
   - Bushing: copper-nickel-zinc alloy
   - Spring: stainless steel/passivate

Terminus Accessories	
Part Number	Terminus Accessory
181-066-S	Ceramic Alignment Sleeve
181-066-C	Protective Cover

SuperNine® Fiber optics

MIL-DTL-38999 Series III Type

187-019/187-029 Size 16 termini pin and socket dust caps

SIZE 16 DUMMY TERMINUS/SEALING PLUG FOR MIL-DTL-38999 CONNECTORS



181-048-16 **Size 16 dummy terminus reduces weight and eliminates cost of using expensive contacts**

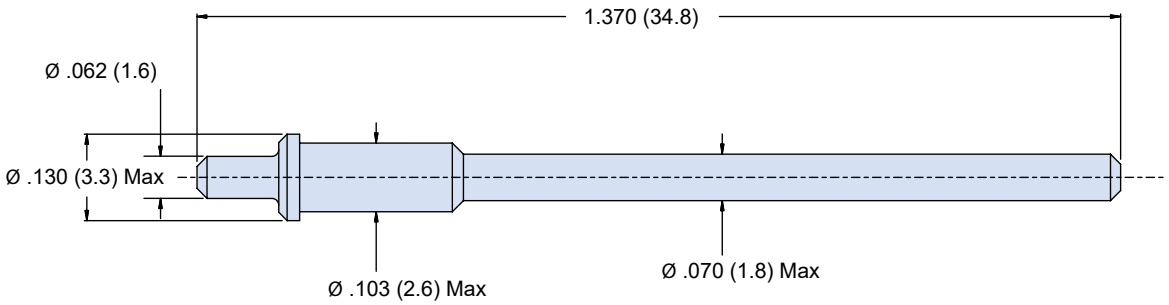

NOTES

1. Materials/finish: terminus: high grade engineering thermoplastic
2. Insertion/extraction tool: P/N: M81969/14-03

SIZE 16 PIN AND SOCKET TERMINUS VINYL DUST CAPS



187-019 **Vinyl dust cap for size 16 termini with ø .0625 Ferrules**
Installs directly onto ferrule of 181-001, 181-002, 181-009, 181-010, 181-035, 181-036, 181-052 and 181-053 Termini

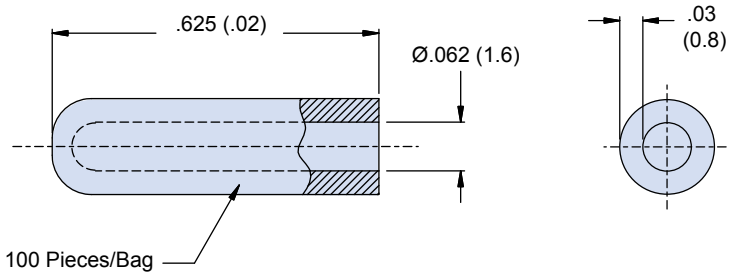

© 2022 Glenair, Inc • 1211 Air Way, Glendale, CA 91201 • 818-247-6000 • www.glenair.com • U.S. CAGE code 06324 • SuperNine® Catalog
Dimensions in Inches (millimeters) are subject to change without notice.

SIZE 16 SOCKET TERMINUS VINYL DUST CAPS

187-029 **Vinyl dust cap for socket termini. Installs over of 181-001, 181-009, 181-035, and onto alignment sleeve of 181-053 termini**



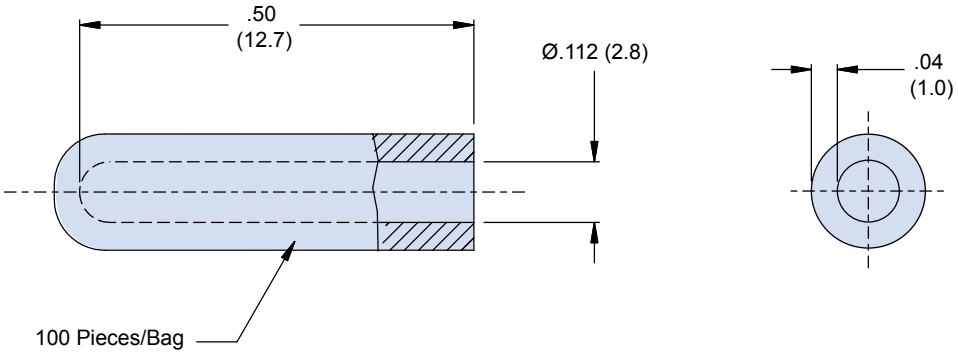

SIZE 20 PIN AND SOCKET TERMINUS VINYL DUST CAPS

187-266 **Vinyl dust cap for size 20 termini fits over metal terminus body of 181-065 pin or 181-066 socket termini**



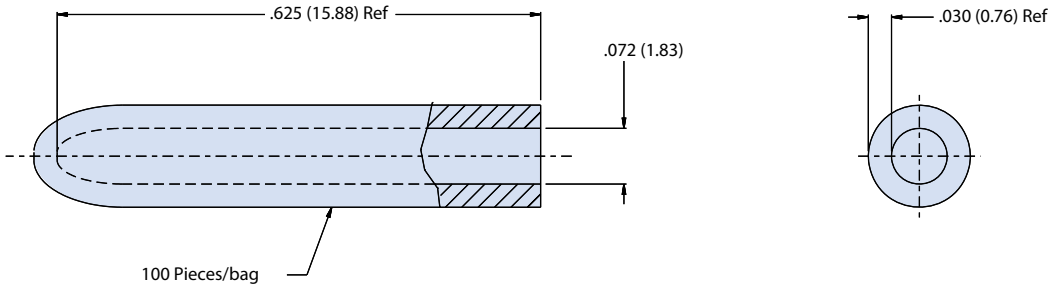

© 2022 Glenair, Inc • 1211 Air Way, Glendale, CA 91201 • 818-247-6000 • www.glenair.com • U.S. CAGE code 06324 • SuperNIne® Catalog
Dimensions in Inches (millimeters) are subject to change without notice.

ADVANCED PERFORMANCE

SuperNine® Fiber optics

MIL-DTL-38999 Series III Type

180-091 (06) plug • Multi-channel



Part Number Developement						
Sample Part Number	**180-091**	**XW**	**06**	**-17-8**	**P**	**N**
Series / Basic Part No.	D38999 Series III Type					
Material/Finish	See Material/Finish Table					
Connector Style	**06** = Plug Connector					
Shell Size/Insert Arr.*	IAW MIL-DTL-38999 Series III, Per MIL-STD-1560					
Insert Designation	**P** = Pin **S** = Socket					
Alternate Key Position*	**A, B, C, D, E, N** = Normal; Per MIL-DTL-38999					

***See 'reference information' portion of this section for complete details**

NOTES

1. Insert arrangement in accordance with MIL-STD-1560, see page G-12.
2. Blue color band indicates rear release retention system. Yellow color band indicates fiber optic connector. Blue and yellow color bands are located approximately as shown - sequencing optional.
3. For Glenair terminus part numbers see Glenair drawing 181-001 and 181-002.
4. Material and finish:
   - Barrel, coupling nut: see material and finish table
   - Coupling nut (for composite): high grade engineering thermoplastic/ unplated
   - Insulator: high grade rigid dielectric
   - Seals: fluorosilicone
   - Ground spring: copper alloy/nickel

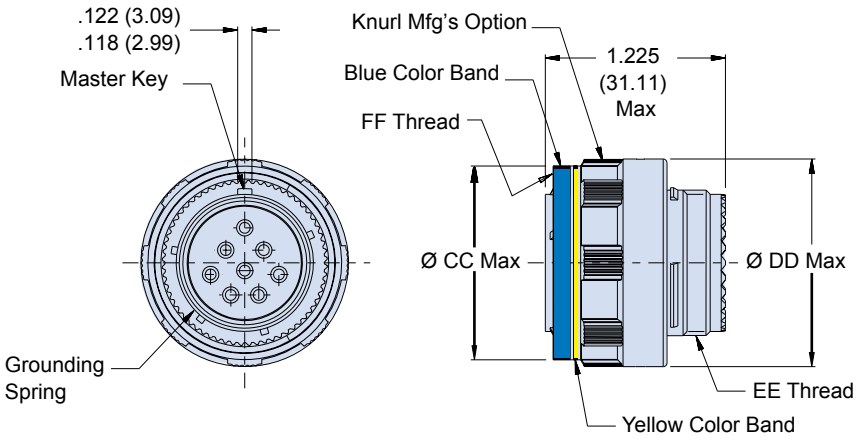

Material and Finish		
Code	**Material**	**Finish Description**
M	Aluminum Alloy	Electroless Nickel
MT		Nickel - PTFE, Grey
ZNU		Zinc-Nickel, Black
ZR		Zinc-Nickel, Black (RoHS)
XM	Composite	Electroless Nickel
XMT		Nickel - PTFE, Grey
XW		Cadmium, Olive Drab
XZN		Zinc-Nickel, Black
MS	Stainless Steel	Electroless Nickel
ZL		Electro-Deposited Nickel
Z1		Passivate
AB	Marine Bronze	None (Clean Only)

Dimensions					
Shell Size Code	**Shell Size**	**FF Thread**	**Ø CC Max**	**Ø DD Max**	**EE Thread**
A	9	.6250-.1P-.3L-TS-2B	.811 (20.60)	.858 (21.79)	M12 x 1.0-6g 0.100R
B	11	.7500-.1P-.3L-TS-2B	.929 (23.6)	.984 (25.0)	M15 x 1.0-6g 0.100R
C	13	.8750-.1P-.3L-TS-2B	1.110 (28.2)	1.157 (29.4)	M18 x 1.0-6g 0.100R
D	15	1.0000-.1P-.3L-TS-2B	1.232 (31.3)	1.280 (32.5)	M22 x 1.0-6g 0.100R
E	17	1.1875-.1P-.3L-TS-2B	1.358 (34.5)	1.406 (35.7)	M25 x 1.0-6g 0.100R
F	19	1.2500-.1P-.3L-TS-2B	1.469 (37.3)	1.516 (38.5)	M28 x 1.0-6g 0.100R
G	21	1.3750-.1P-.3L-TS-2B	1.594 (40.5)	1.642 (41.7)	M31 x 1.0-6g 0.100R
H	23	1.5000-.1P-.3L-TS-2B	1.720 (43.7)	1.768 (44.9)	M34 x 1.0-6g 0.100R
J	25	1.6250-.1P-.3L-TS-2B	1.843 (46.8)	1.890 (48.0)	M37 x 1.0-6g 0.100R

© 2022 Glenair, Inc • 1211 Air Way, Glendale, CA 91201 • 818-247-6000 • www.glenair.com • U.S. CAGE code 06324 • SuperNine® Catalog
Dimensions in Inches (millimeters) are subject to change without notice.

SuperNine® Fiber optics

MIL-DTL-38999 Series III Type

180-091 (05) in-line receptacle • Multi-channel



Part Number Developement						
Sample Part Number	**180-091**	**XW**	**05**	**-17-8**	**P**	**N**
Series / Basic Part No.	D38999 Series III Type					
Finish	See Material/Finish Table					
Connector Style*	**05** = In-Line Receptacle					
Shell Size/Insert Arr.*	IAW MIL-DTL-38999 Series III, Per MIL-STD-1560					
Insert Designation	**P** = Pin **S** = Socket					
Alternate Key Position*	**A**, **B**, **C**, **D**, **E**, **N** = Normal; Per MIL-DTL-38999					

***See 'reference information' portion of this section for complete details**

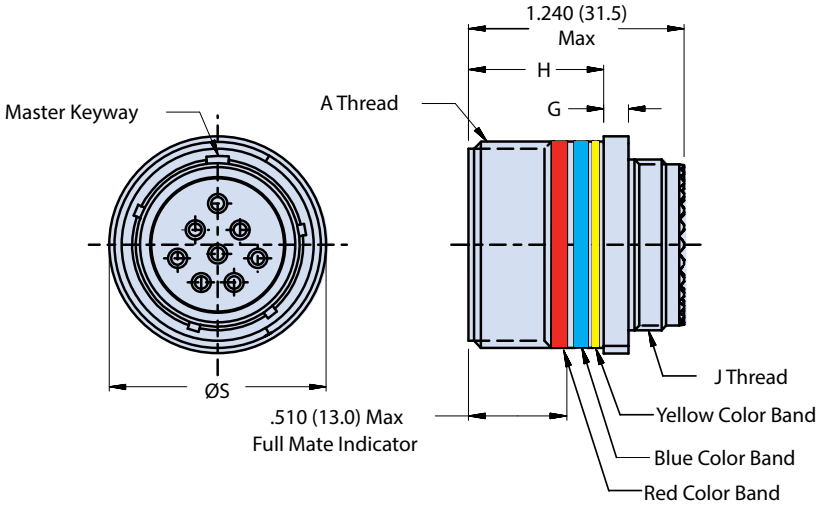

NOTES

1. Insert arrangement in accordance with MIL-STD-1560, see page G-12.
2. Blue color band indicates rear release retention system. Yellow color band indicates fiber optic connector. Blue and yellow color bands are located approximately as shown - sequencing optional.
3. For Glenair terminus part numbers, see Glenair Drawing 181-001 and 181-002.
4. Material/finish:
   - Shell: see material and finish table
   - Insulator: high grade rigid dielectric
   - Seals: fluorosilicone
   - Retention clip: copper alloy

Material and Finish		
Code	**Material**	**Finish Description**
M	Aluminum Alloy	Electroless Nickel
MT		Nickel - PTFE, Grey
ZNU		Zinc-Nickel, Black
ZR		Zinc-Nickel, Black (RoHS)
XM	Composite	Electroless Nickel
XMT		Nickel - PTFE, Grey
XW		Cadmium, Olive Drab
XZN		Zinc-Nickel, Black
MS	Stainless Steel	Electroless Nickel
ZL		Electro-Deposited Nickel
Z1		Passivate
AB	Marine Bronze	None (Clean Only)

Dimensions						
Shell Size Code	**Shell Size**	**A Thread**	**G**	**H**	**Ø S**	**J Thread**
B	11	.7500-.1P-.3L-TS-2A	.144 (3.7) .083 (2.1)	.823 (20.9) .768 (19.5)	.840 (21.3)	M15 x 1.0-6g 0.100R
C	13	.8750-.1P-.3L-TS-2A	.144 (3.7) .083 (2.1)	.823 (20.9) .768 (19.5)	.963 (24.5)	M18 x 1.0-6g 0.100R
D	15	1.0000-.1P-.3L-TS-2A	.144 (3.7) .083 (2.1)	.823 (20.9) .768 (19.5)	1.090 (27.7)	M22 x 1.0-6g 0.100R
E	17	1.1875-.1P-.3L-TS-2A	.144 (3.7) .083 (2.1)	.823 (20.9) .768 (19.5)	1.275 (32.4)	M25 x 1.0-6g 0.100R
F	19	1.2500-.1P-.3L-TS-2A	.144 (3.7) .083 (2.1)	.823 (20.9) .768 (19.5)	1.337 (34.0)	M28 x 1.0-6g 0.100R
G	21	1.3750-.1P-.3L-TS-2A	.171 (65.2) .083 (39.8)	.791 (20.0) .736 (18.7)	1.463 (37.2)	M31 x 1.0-6g 0.100R
H	23	1.5000-.1P-.3L-TS-2A	.171 (65.2) .083 (39.8)	.791 (20.0) .736 (18.7)	1.587 (40.3)	M34 x 1.0-6g 0.100R
J	25	1.6250-.1P-.3L-TS-2A	.171 (65.2) .083 (39.8)	.791 (20.0) .736 (18.7)	1.713 (43.5)	M37 x 1.0-6g 0.100R

© 2022 Glenair, Inc • 1211 Air Way, Glendale, CA 91201 • 818-247-6000 • www.glenair.com • U.S. CAGE code 06324 • SuperNIne® Catalog
Dimensions in Inches (millimeters) are subject to change without notice.

ADVANCED PERFORMANCE

SuperNine® Fiber optics

MIL-DTL-38999 Series III Type

180-091 (08) jam nut receptacle • Multi-channel



NOTES

1. Insert arrangement in accordance with MIL-STD-1560, See Page G-12.
2. Blue color band indicates rear release retention system. Yellow color band indicates fiber optic connector. Blue and yellow color bands are located approximately as shown - sequencing optional.
3. For Glenair Terminus part numbers, see Glenair Drawing 181-001 and 181-002.
4. For recommended panel cutout and alternate key positions, See Page G-13 and G-14.
5. S7 wall mount receptacle can be front panel mounted using cut out dimensions R1 or R2. Dimension R2 is for use with S7 wall mount receptacle only.
6. Material and Finish:
   - Shell, Jam Nut: See Material and Finish Table
   - Jam Nut (for Composite): Al Alloy, plated same as shell
   - Insulator: High Grade Rigid Dielectric
   - Seals: Fluorosilicone

Material and Finish		
Code	**Material**	**Finish Description**
M	Aluminum Alloy	Electroless Nickel
MT		Nickel - PTFE, Grey
ZNU		Zinc-Nickel, Black
ZR		Zinc-Nickel, Black (RoHS)
XM	Composite	Electroless Nickel
XMT		Nickel - PTFE, Grey
XW		Cadmium, Olive Drab
XZN		Zinc-Nickel, Black
MS	Stainless Steel	Electroless Nickel
ZL		Electro-Deposited Nickel
Z1		Passivate
AB	Marine Bronze	None (Clean Only)

Part number development						
Sample Part Number	**180-091**	**XW**	**08**	**-17-8**	**P**	**N**
Series / Basic Part No.	D38999 Series III Type					
Material/Finish	See Material/Finish Table					
Connector Style	**08** = Jam Nut Receptacle					
Shell Size/Insert Arr.*	IAW MIL-DTL-38999 Series III, Per MIL-STD-1560					
Insert Designation	**P** = Pin **S** = Socket					
Alternate Key Position*	**A, B, C, D, E, N** = Normal; Per MIL-DTL-38999					

***See 'reference information' portion of this section for complete details**

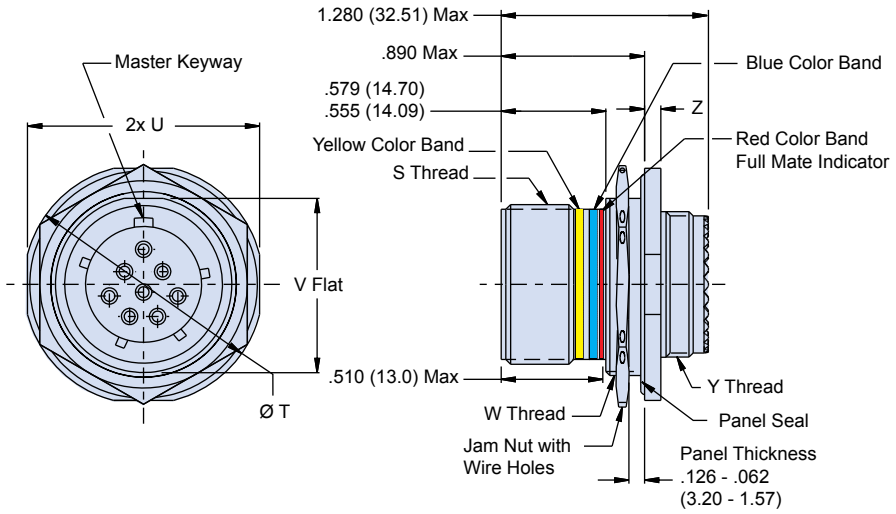

Dimensions								
Shell Size Code	**Shell Size Ref**	**S Thread .1P-.3L-TS-2A**	**Ø T**	**U**	**V**	**W Thread 1.0-6g 0.100R**	**Y Thread 1.0-6g 0.100R**	**Z**
A	9	.6250-	1.200 (30.48) 1.777 (45.14)	1.079 (27.41) 1.047 (26.59)	.655 (16.64) .645 (16.38)	M17	M12	.121 (3.1) .083 (2.1)
B	11	.7500	1.386 (35.20) 1.362 (34.59)	1.268 (32.21) 1.236 (31.39)	.755 (19.18) .745 (18.92)	M20	M15	.121 (3.1) .083 (2.1)
C	13	.8750	1.512 (38.40) 1.488 (37.80)	1.390 (35.31) 1.358 (34.49)	.942 (23.93) .932 (23.67)	M25	M18	.121 (3.1) .083 (2.1)
D	15	1.0000	1.638 (41.61) 1.614 (41.00)	1.516 (38.51) 1.484 (37.69)	1.066 (27.08) 1.056 (26.82)	M28	M22	.121 (3.1) .083 (2.1)
E	17	1.1875	1.764 (44.81) 1.740 (44.20)	1.642 (41.71) 1.610 (40.89)	1.191 (30.25) 1.181 (30.00)	M32	M25	.121 (3.1) .083 (2.1)
F	19	1.2500	1.949 (49.50) 1.925 (48.90)	1.827 (46.41) 1.795 (45.59)	1.316 (33.43) 1.306 (33.17)	M35	M28	.154 (3.9) .114 (2.9)
G	21	1.3750	2.075 (52.71) 2.051 (52.10)	1.953 (49.61) 1.921 (48.79)	1.441 (36.60) 1.431 (36.35)	M38	M31	.154 (3.9) .114 (2.9)
H	23	1.5000	2.201 (55.91) 2.177 (55.30)	2.079 (52.81) 2.047 (51.99)	1.566 (39.78) 1.556 (39.52)	M41	M34	.154 (3.9) .114 (2.9)
J	25	1.6250	2.323 (59.00) 2.299 (58.39)	2.205 (56.01) 2.173 (55.19)	1.691 (42.95) 1.681 (42.70)	M44	M37	.154 (3.9) .114 (2.9)

© 2022 Glenair, Inc • 1211 Air Way, Glendale, CA 91201 • 818-247-6000 • www.glenair.com • U.S. CAGE code 06324 • SuperNine® Catalog
Dimensions in Inches (millimeters) are subject to change without notice.

SuperNine® Fiber optics

MIL-DTL-38999 Series III Type

180-091 (H7) wall mount receptacle, round holes • Multi-channel



Part number development						
Sample Part Number	**180-091**	**XW**	**H7**	**-17-8**	**P**	**N**
Series / Basic Part No.	D38999 Series III Type					
Material/Finish	See Material/Finish Table					
Connector Style	**H7** = Wall Mount Receptacle with Round Holes (Std)					
Shell Size/Insert Arr.*	IAW MIL-DTL-38999 Series III, Per MIL-STD-1560					
Insert Designation	**P** = Pin **S** = Socket					
Alternate Key Position*	**A, B, C, D, E, N** = Normal; Per MIL-DTL-38999					

***See 'reference information' portion of this section for complete details**

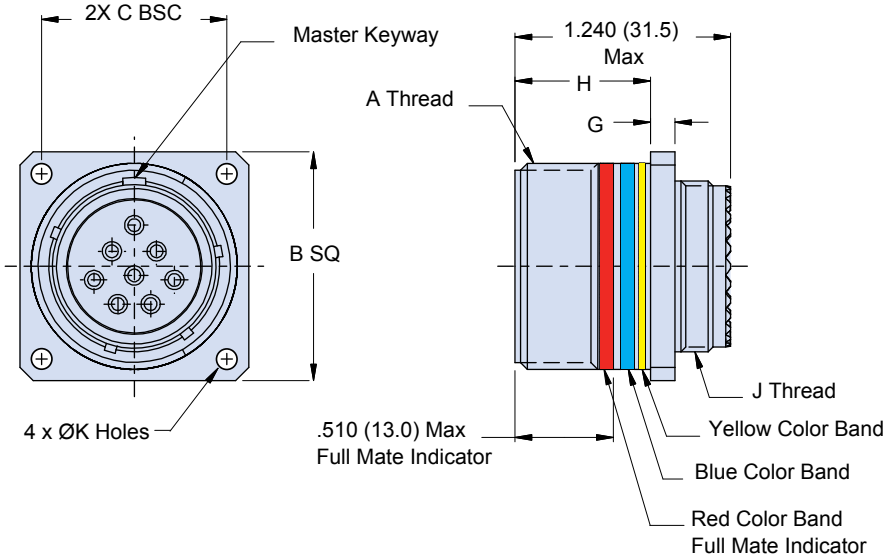

NOTES

1. Insert arrangement in accordance with MIL-STD-1560, see page G-12.
2. Blue color band indicates rear release retention system. Yellow color band indicates fiber optic connector. Blue and yellow color bands are located approximately as shown - sequencing optional.
3. For Glenair terminus part numbers, see Glenair drawing 181-001 and 181-002.
4. For recommended panel cutout, see page G-13
5. Material/finish:
   - Shell: see material and finish table
   - Insulator: high grade rigid dielectric
   - Seals: fluorosilicone

Material and Finish		
Code	**Material**	**Finish Description**
M	Aluminum Alloy	Electroless Nickel
MT		Nickel - PTFE, Grey
ZNU		Zinc-Nickel, Black
ZR		Zinc-Nickel, Black (RoHS)
XM	Composite	Electroless Nickel
XMT		Nickel - PTFE, Grey
XW		Cadmium, Olive Drab
XZN		Zinc-Nickel, Black
MS	Stainless Steel	Electroless Nickel
ZL		Electro-Deposited Nickel
Z1		Passivate
AB	Marine Bronze	None (Clean Only)

Dimensions								
Shell Size Code	**Shell Size**	**A Thread .1P-.3L-TS-2A**	**B SQ**	**C BSC**	**G**	**H**	**J Thread 1.0-6g 0.100R**	**Ø K Holes**
B	11	.7500	1.043 (26.5) 1.019 (25.9)	.812 (20.6)	.144 (3.7) .083 (2.1)	.823 (20.9) .768 (19.5)	M15	.136 (3.5) .120 (3.0)
C	13	.8750	1.138 (28.9) 1.114 (28.3)	.906 (23.0)	.144 (3.7) .083 (2.1)	.823 (20.9) .768 (19.5)	M18	.136 (3.5) .120 (3.0)
D	15	1.0000	1.232 (31.3) 1.208 (30.7)	.969 (24.6)	.144 (3.7) .083 (2.1)	.823 (20.9) .768 (19.5)	M22	.136 (3.5) .120 (3.0)
E	17	1.1875	1.323 (33.6) 1.299 (33.0)	1.062 (27.0)	.144 (3.7) .083 (2.1)	.823 (20.9) .768 (19.5)	M25	.136 (3.5) .120 (3.0)
F	19	1.2500	1.449 (36.8) 1.425 (36.2)	1.156 (29.4)	.144 (3.7) .083 (2.1)	.823 (20.9) .768 (19.5)	M28	.136 (3.5) .120 (3.0)
G	21	1.3750	1.575 (40.0) 1.551 (39.4)	1.250 (31.8)	.171 (65.2) .083 (39.8)	.791 (20.0) .736 (18.7)	M31	.136 (3.5) .120 (3.0)
H	23	1.5000	1.701 (43.2) 1.677 (42.6)	1.375 (34.9)	.171 (65.2) .083 (39.8)	.791 (20.0) .736 (18.7)	M34	.162 (4.1) .146 (3.7)
J	25	1.6250	1.823 (46.3) 1.799 (45.7)	1.500 (38.1)	.171 (65.2) .083 (39.8)	.791 (20.0) .736 (18.7)	M37	.162 (4.1) .146 (3.7)

© 2022 Glenair, Inc • 1211 Air Way, Glendale, CA 91201 • 818-247-6000 • www.glenair.com • U.S. CAGE code 06324 • SuperNIne® Catalog
Dimensions in Inches (millimeters) are subject to change without notice.

ADVANCED PERFORMANCE

SuperNine® Fiber optics

MIL-DTL-38999 Series III Type

180-091 (S7) wall mount receptacle, slotted holes • Multi-channel



Part number development						
Sample Part Number	**180-091**	**XW**	**S7**	**-17-8**	**P**	**N**
Series / Basic Part No.	D38999 Series III Type					
Material/Finish	See Material/Finish Table					
Connector Style	**S7** = Wall Mount Receptacle with Slotted Holes					
Shell Size/Insert Arr.*	IAW MIL-DTL-38999 Series III, Per MIL-STD-1560					
Insert Designation	**P** = Pin **S** = Socket					
Alternate Key Position*	**A, B, C, D, E, N** = Normal; Per MIL-DTL-38999					

***See 'reference information' portion of this section for complete details**

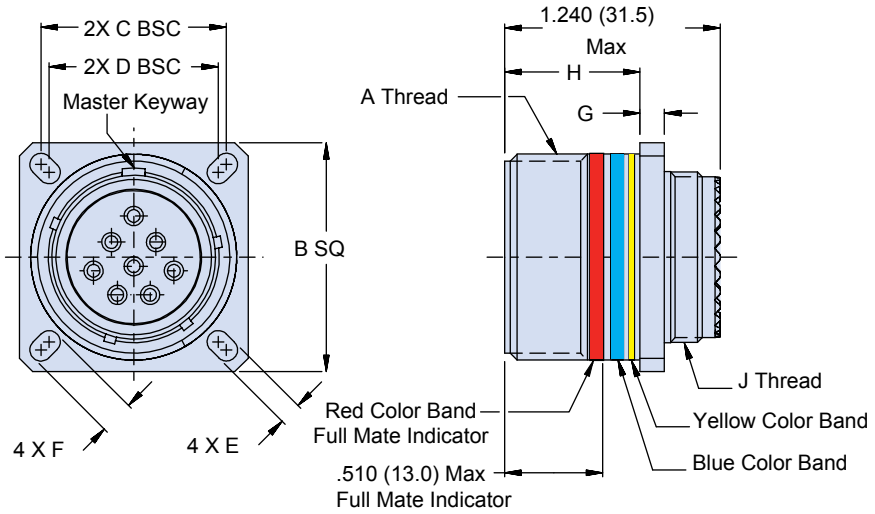

NOTES

1. Insert arrangement in accordance with MIL-STD-1560, see page G-12.
2. Blue color band indicates rear release retention system. Yellow color band indicates fiber optic connector. Blue and yellow color bands are located approximately as shown - sequencing optional.
3. For appropriate Glenair terminus part numbers, see Glenair drawing 181-001 and 181-002.
4. For recommended panel cutout, see page G-13
5. S7 wall mount receptacle can be front panel mounted using cut out dimension R1 or R2. Dimnesion R2 is for use with S7 wall mount receptacle only.
6. Material/Finish:
   - Shell: see material and finish table
   - Insulator: high grade rigid dielectric
   - Seals: fluorosilicone

Material and Finish		
Code	**Material**	**Finish Description**
M	Aluminum Alloy	Electroless Nickel
MT		Nickel - PTFE, Grey
ZNU		Zinc-Nickel, Black
ZR		Zinc-Nickel, Black (RoHS)
XM	Composite	Electroless Nickel
XMT		Nickel - PTFE, Grey
XW		Cadmium, Olive Drab
XZN		Zinc-Nickel, Black
MS	Stainless Steel	Electroless Nickel
ZL		Electro-Deposited Nickel
Z1		Passivate
AB	Marine Bronze	None (Clean Only)

Dimensions										
Shell Size Code	**Shell Size Ref**	**A Thread .1P-.3L-TS-2A**	**B SQ**	**C BSC**	**D BSC**	**E**	**F**	**G**	**H**	**J Thread 1.0-6g 0.100R**
A	9	.6250	.949 (24.1) .929 (23.6)	.719 (18.3)	.594 (15.1)	.136 (3.5) .120 (3.0)	.216 (5.5)	.144 (3.7) .083 (2.1)	.823 (20.9) .768 (19.5)	M12
B	11	.7500	1.043 (26.5) 1.019 (25.9)	.812 (20.6)	.719 (18.3)	.136 (3.5) .120 (3.0)	.202 (5.1) .186 (4.7)	.144 (3.7) .083 (2.1)	.823 (20.9) .768 (19.5)	M15
C	13	.8750	1.138 (28.9) 1.114 (28.3)	.906 (23.0)	.812 (20.6)	.136 (3.5) .120 (3.0)	.202 (5.1) .186 (4.7)	.144 (3.7) .083 (2.1)	.823 (20.9) .768 (19.5)	M18
D	15	1.0000	1.232 (31.3) 1.208 (30.7)	.969 (24.6)	.906 (23.0)	.136 (3.5) .120 (3.0)	.181 (4.6) .165 (4.2)	.144 (3.7) .083 (2.1)	.823 (20.9) .768 (19.5)	M22
E	17	1.1875	1.323 (33.6) 1.299 (33.0)	1.062 (27.0)	.969 (24.6)	.136 (3.5) .120 (3.0)	.202 (5.1) .186 (4.7)	.144 (3.7) .083 (2.1)	.823 (20.9) .768 (19.5)	M25
F	19	1.2500	1.449 (36.8) 1.425 (36.2)	1.156 (29.4)	1.062 (27.0)	.136 (3.5) .120 (3.0)	.202 (5.1) .186 (4.7)	.144 (3.7) .083 (2.1)	.823 (20.9) .768 (19.5)	M28
G	21	1.3750	1.575 (40.0) 1.551 (39.4)	1.250 (31.8)	1.156 (29.4)	.136 (3.5) .120 (3.0)	.202 (5.1) .186 (4.7)	.171 (65.2) .083 (39.8)	.791 (20.0) .736 (18.7)	M31
H	23	1.5000	1.701 (43.2) 1.677 (42.6)	1.375 (34.9)	1.250 (31.8)	.162 (4.1) .146 (3.7)	.250 (6.4) .234 (5.9)	.171 (65.2) .083 (39.8)	.791 (20.0) .736 (18.7)	M34
J	25	1.6250	1.823 (46.3) 1.799 (45.7)	1.500 (38.1)	1.375 (34.9)	.162 (4.1) .146 (3.7)	.250 (6.4) .234 (5.9)	.171 (65.2) .083 (39.8)	.791 (20.0) .736 (18.7)	M37

© 2022 Glenair, Inc • 1211 Air Way, Glendale, CA 91201 • 818-247-6000 • www.glenair.com • U.S. CAGE code 06324 • SuperNine® Catalog
Dimensions in Inches (millimeters) are subject to change without notice.

SuperNine® Fiber optics

MIL-DTL-38999 Series III Type

180-091 (T7) wall mount receptacle, threaded insert • Multi-channel



Part number development						
Sample Part Number	**180-091**	**XW**	**T7**	**-17-8**	**P**	**N**
Series / Basic Part No.	D38999 Series III Type					
Material/Finish	See Material/Finish Table					
Connector Style	**T7** = Wall Mount Receptacle with Threaded Insert Holes					
Shell Size/Insert Arr.*	IAW MIL-DTL-38999 Series III, Per MIL-STD-1560					
Insert Designation	**P** = Pin **S** = Socket					
Alternate Key Position*	**A, B, C, D, E, N** = Normal; Per MIL-DTL-38999					

***See 'reference information' portion of this section for complete details**

NOTES

1. Insert arrangement in accordance with MIL-STD-1560, see page G-12
2. Blue color band indicates rear release retention system. Yellow color band indicates fiber optic connector. Blue and yellow color bands are located approximately as shown - sequencing optional.
3. For recommended panel cutout, see page G-13
4. Material/Finish:
   - Shell: See Material and Finish Table
   - Insulator: High Grade Rigid Dielectric
   - Seals: Fluorosilicone

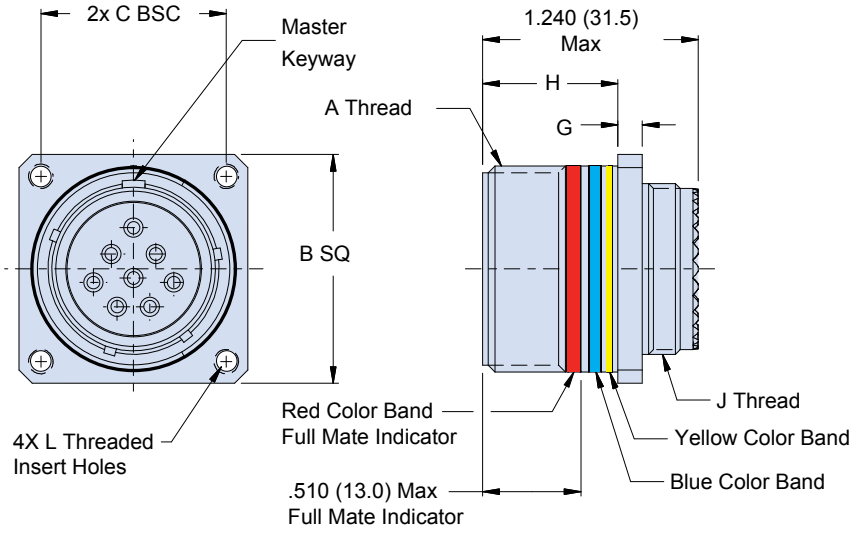

Material and Finish		
Code	**Material**	**Finish Description**
M	Aluminum Alloy	Electroless Nickel
MT		Nickel - PTFE, Grey
ZNU		Zinc-Nickel, Black
ZR		Zinc-Nickel, Black (RoHS)
XM	Composite	Electroless Nickel
XMT		Nickel - PTFE, Grey
XW		Cadmium, Olive Drab
XZN		Zinc-Nickel, Black
MS	Stainless Steel	Electroless Nickel
ZL		Electro-Deposited Nickel
Z1		Passivate
AB	Marine Bronze	None (Clean Only)

Dimensions								
Shell Size Code	**Shell Size Ref**	**A Thread** .1P-.3L-TS-2A	**B SQ**	**C BSC**	**G**	**H**	**J Thread** 1.0-6g 0.100R	**L Threaded Insert Holes**
B	11	.7500	1.043 (26.5) 1.019 (25.9)	.812 (20.6)	.144 (3.7) .083 (2.1)	.823 (20.9) .768 (19.5)	M15	.112-40 UNC-2B
C	13	.8750	1.138 (28.9) 1.114 (28.3)	.906 (23.0)	.144 (3.7) .083 (2.1)	.823 (20.9) .768 (19.5)	M18	.112-40 UNC-2B
D	15	1.0000	1.232 (31.3) 1.208 (30.7)	.969 (24.6)	.144 (3.7) .083 (2.1)	.823 (20.9) .768 (19.5)	M22	.112-40 UNC-2B
E	17	1.1875	1.323 (33.6) 1.299 (33.0)	1.062 (27.0)	.144 (3.7) .083 (2.1)	.823 (20.9) .768 (19.5)	M25	.112-40 UNC-2B
F	19	1.2500	1.449 (36.8) 1.425 (36.2)	1.156 (29.4)	.144 (3.7) .083 (2.1)	.823 (20.9) .768 (19.5)	M28	.112-40 UNC-2B
G	21	1.3750	1.575 (40.0) 1.551 (39.4)	1.250 (31.8)	.171 (65.2) .083 (39.8)	.791 (20.0) .736 (18.7)	M31	.112-40 UNC-2B
H	23	1.5000	1.701 (43.2) 1.677 (42.6)	1.375 (34.9)	.171 (65.2) .083 (39.8)	.791 (20.0) .736 (18.7)	M34	.138-32 UNC-2B
J	25	1.6250	1.823 (46.3) 1.799 (45.7)	1.500 (38.1)	.171 (65.2) .083 (39.8)	.791 (20.0) .736 (18.7)	M37 x 1.0-6g 0.100R	.138-32 UNC-2B

© 2022 Glenair, Inc • 1211 Air Way, Glendale, CA 91201 • 818-247-6000 • www.glenair.com • U.S. CAGE code 06324 • SuperNIne® Catalog
Dimensions in Inches (millimeters) are subject to change without notice.

SuperNine® Fiber optics

MIL-DTL-38999 Series III Type

660-023, -024/660-049, -050 metal and composite covers

MIL-DTL-38999 SERIES III TYPE METAL AND COMPOSITE PROTECTIVE COVERS



PART NUMBER DEVELOPMENT							
Sample Part Number	**660**	**-023**	**M**	**17**	**H**	**5**	**-01**
Product Series	Series 66						
Cover Type	**-023** = Metal Plug Cover **-024** = Metal Receptacle Cover **-049** = Composite Plug Cover **-050** = Composite Receptacle Cover						
Material/Finish	See Material/Finish Table						
Shell Size	See Dimensions Table						
Lanyard Type	**D** = Bead Chain, CRES, Passivated **F** = Wire Rope, Nylon Jacket **G** = Nylon Rope, Black **H** = Wire Rope, Teflon Jacket **K** = Nylon Rope, Olive Drab **N** = No Lanyard **R** = Wire Rope, PVC Jacket **S** = #8 Sash Chain, CRES, Passivated **SK** = Nylon Rope (Black) w/Slip Knot **T** = Wire Rope, No Jacket **U** = Wire Rope, Polyurethane Jacket						
Attachment Length	Length in Inches; I.E. **5** = 5 inches						
Attachment Dash No.	See Table I, II, III, or IV; omit for "SK" slip knot attachment						

-023 and -049 Plug Cover MIL-DTL-38999/32 Type

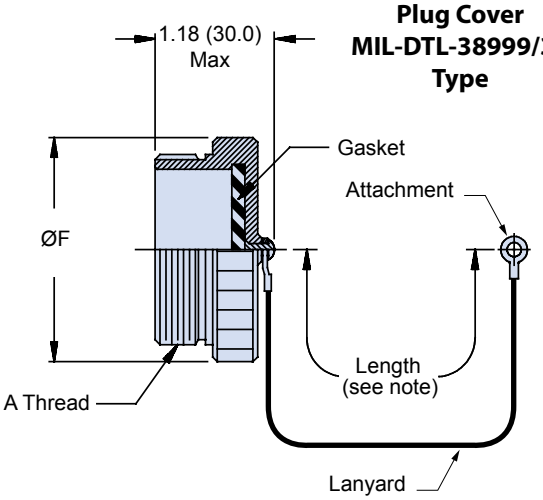

-024 and -050 Receptacle Cover MIL-DTL-38999/33 Type

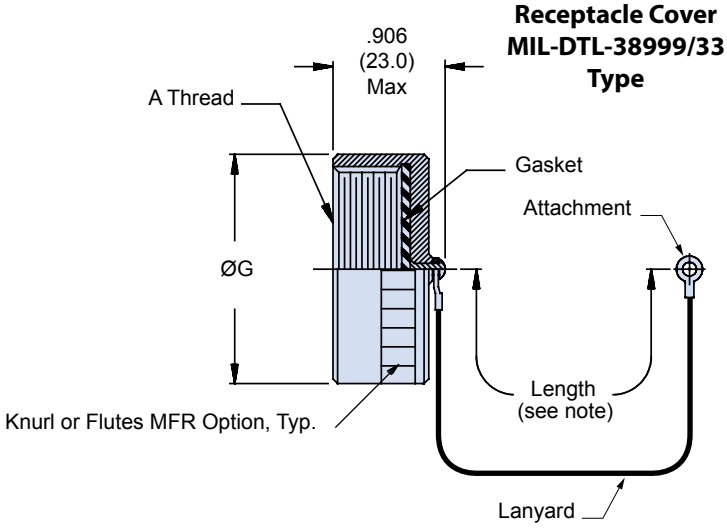

NOTES

1. Length tolerance for sash chain (s) is ± 1 link, for all other attachments ± .25.
2. Material/Finish
   - Cover: see material/finish table
   - Gasket: silicone
   - Hardware, rivet: stainless steel/passivate

© 2022 Glenair, Inc • 1211 Air Way, Glendale, CA 91201 • 818-247-6000 • www.glenair.com • U.S. CAGE code 06324 • SuperNine® Catalog
Dimensions in Inches (millimeters) are subject to change without notice.

SuperNine® Fiber optics

MIL-DTL-38999 Series III Type

660-023, -024/660-049, -050 metal and composite covers

DIMENSIONS			
Shell Size	A Thread	Ø F Max	Ø G Max
09	.6250 - 0.1P-0.3L-TS	0.906 (23.0)	.906 (23.0)
11	.7500 - 0.1P-0.3L-TS	1.024 (26.0)	1.102 (28.0)
13	.8750 - 0.1P-0.3L-TS	1.220 (31.0)	1.220 (31.0)
15	1.0000 - 0.1P-0.3L-TS	1.300 (33.0)	1.260 (32.0)
17	1.1875 - 0.1P-0.3L-TS	1.457 (37.0)	1.457 (37.0)
19	1.2500 - 0.1P-0.3L-TS	1.575 (40.0)	1.535 (39.0)
21	1.3750 - 0.1P-0.3L-TS	1.732 (44.0)	1.654 (42.0)
23	1.5000 - 0.1P-0.3L-TS	1.811 (46.0)	1.772 (45.0)
25	1.6250 - 0.1P-0.3L-TS	1.969 (50.0)	1.929 (49.0)

MATERIAL AND FINISH		
Code	Material	Finish Description
C	Aluminum Alloy	Anodize, Black
G		Anodize, Hardcoat
M		Electroless Nickel
MT		Nickel-PTFE, Grey
NF		Cadmium, Olive Drab
ZN		Zinc-Nickel, Olive Drab
ZNU		Zinc-Nickel, Black
Z1	Stainless Steel	Passivate
ZL		Electrodeposited Nickel
XM	Composite	Electroless Nickel
XW		Cadmium, Olive Drab
XB		No Plating, Black

AVAILABLE LANYARD TYPES (SHOWN WITH OPTIONAL EYELET ATTACHMENT, SEE LANYARD CODE TABLE FOR LANYARD STYLE)

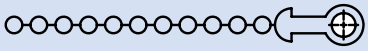

Bead Chain
(Type D)

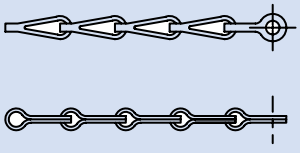

Sash Chain
(Type S)



Rope
(Types F, G, H, K, R, T, U)

© 2022 Glenair, Inc • 1211 Air Way, Glendale, CA 91201 • 818-247-6000 • www.glenair.com • U.S. CAGE code 06324 • SuperNIne® Catalog
Dimensions in Inches (millimeters) are subject to change without notice.

ATTACHING A COVER TO A JAM NUT RECEPTACLE WITH A SOLID RING (STYLE A)

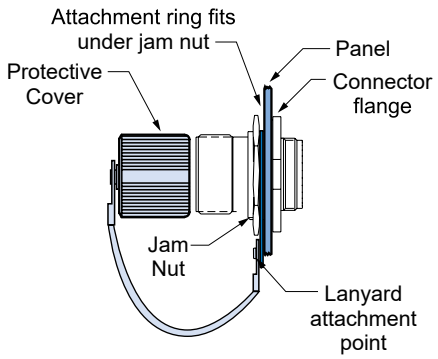

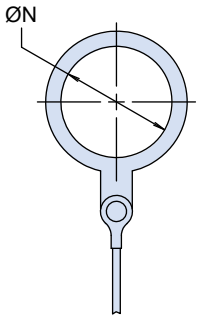

Solid Ring - Style A

TABLE I: SOLID RING STYLE A

Dash No.	Ø N ± .015	180-091 Shell Size
106	.896 (22.8)	11
107	1.016 (25.9)	13
108	1.141 (29.0)	15
109	1.266 (32.3)	17
110	1.391 (35.3)	19
111	1.521 (38.6)	21
112	1.641 (41.7)	23
113	1.766 (45.0)	25

NOTES

1. Solid ring style A dash numbers and shell sizes shown are for Glenair 180-091 fiber optic connectors only. Consult factory for additional sizes.

ATTACHING A COVER TO A CABLE ASSEMBLY WITH A SOLID RING (STYLE B)

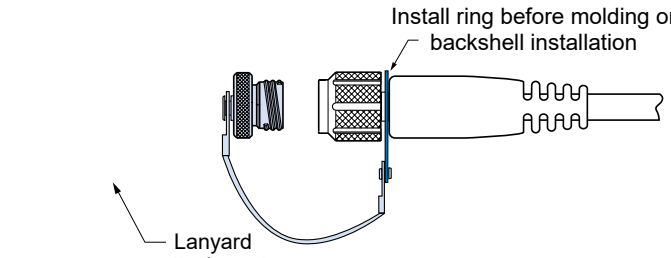

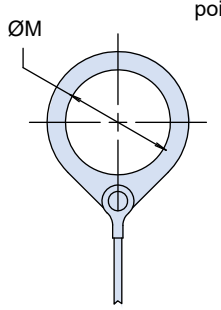

Solid Ring - Style B

TABLE II: SOLID RING STYLE B

Dash No.	**Ø M ± .015**	180-091 Shell Size
10	.593 (15.1)	11
12	.718 (18.2)	13
15	.890 (22.6)	15
17	1.015 (25.9)	17
19	1.140 (29.0)	19
21	1.265 (32.3)	21
22	1.343 (34.0)	23
24	1.484 (37.6)	25

NOTES

1. Solid ring style B dash numbers and shell sizes shown are for Glenair 180-091 fiber optic connectors only. Consult factory for additional sizes.

© 2022 Glenair, Inc • 1211 Air Way, Glendale, CA 91201 • 818-247-6000 • www.glenair.com • U.S. CAGE code 06324 • SuperNine® Catalog
Dimensions in Inches (millimeters) are subject to change without notice.

ATTACHING A COVER TO A CABLE USING A SPLIT RING OR SLIP KNOT

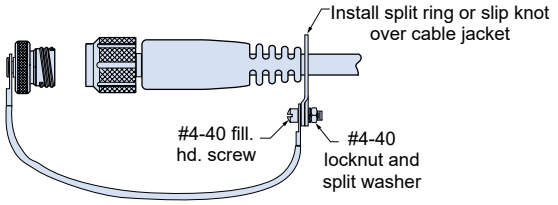

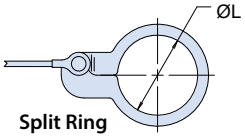

Split Ring Style C

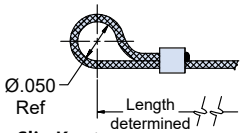

Slip Knot (Type SK)

TABLE III: SPLIT RING STYLE C

Dash No.	Ø L ± .015	Dash No.	Ø L ± .015
50	.425 (10.8)	74	1.625 (41.4)
52	.485 (12.3)	76	1.750 (44.5)
54	.640 (16.3)	78	1.875 (47.8)
56	.750 (19.1)	80	1.980 (50.3)
58	.890 (22.6)	82	2.060 (52.3)
60	1.015 (25.9)	84	2.235 (56.9)
62	1.095 (27.9)	86	2.310 (58.7)
64	1.130 (28.7)	88	2.475 (63.0)
66	1.250 (31.8)	90	2.655 (67.6)
68	1.350 (34.3)	92	2.810 (71.4)
70	1.375 (35.1)	94	3.045 (77.5)
72	1.485 (37.8)		

ATTACHING A RECEPTACLE COVER TO A PANEL WITH A SCREW

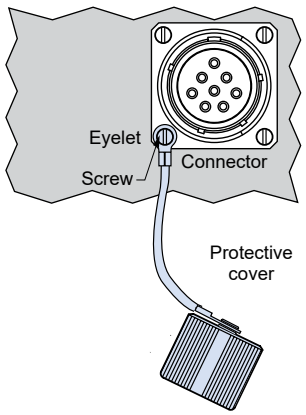

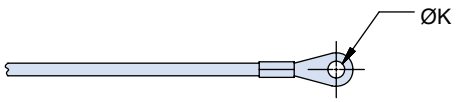

Eyelet - Style D

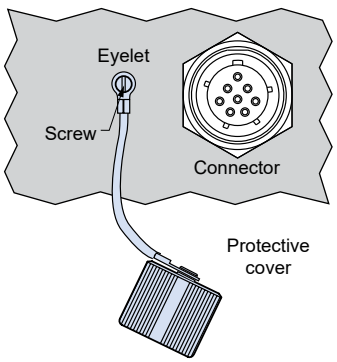

TABLE IV: EYELET STYLE D

Dash No.	Ø K ± .015	180-091 Shell Size
01	.140 (3.56)	
02	.182 (4.62)	
03	.191 (4.85)	
04	.197 (5.00)	
05	.167 (4.24)	
06	.125 (3.18)	11 thru 21
07	.218 (5.53)	
09	.156 (3.96)	23 thru 25
00	No Eyelet	

© 2022 Glenair, Inc • 1211 Air Way, Glendale, CA 91201 • 818-247-6000 • www.glenair.com • U.S. CAGE code 06324 • SuperNIne® Catalog
Dimensions in Inches (millimeters) are subject to change without notice.

ADVANCED PERFORMANCE

SuperNine® Fiber optics

MIL-DTL-38999 Series III Type

Fiber optic cable sets • rugged overmold

D38999 Series III

ASAP FIBER OPTIC CABLE SETS WITH RUGGED OVERMOLDING



Product Features

- Harsh Environment Polyurethane Overmolding (Viton® and Neoprene Available)
- Singlemode or Multimode Fiber Media
- MIL-DTL-38999 Series III Connectors in Aluminum, Composite or Stainless Steel
- Plug, Jam-Nut Receptacle, In-Line and Wall-Mount Receptacle Configurations
- Military Standard Dust Caps and Connector Accessories
- MIL-PRF-29504 Approved Termini
- Multichannel Capability: From 2 to 37 Channels
- Custom Lengths Available
- Robust, Flexible and Crush Resistant

The World's Only Short Lead-Time Source for Harsh Environment Overmolded F/O Cable Assemblies

Overmolded Cable Assemblies

Glenair's overmolded cable assemblies are specifically designed to protect fiber optic and hybrid fiber/copper cables from the effects of moisture, heat, caustic chemicals and mechanical stress conditions. Glenair has been manufacturing these unique overmolded designs in fiber since 1984, and has produced tens of thousands of cables with zero real-time failures. Overmolding (as opposed to shrink boots or other sealing materials) brings added strength and environmental protection to critical interconnect systems. The overmolding process effectively isolates the transmission media from contaminating elements and protects the media from abrasion damage.

Glenair's ASAP Overmolded Fiber Optic Assemblies are available with our full line of composite thermoplastic and metal alloy connectors. Polyurethane is the applied standard overmolding. For other overmolding material types such as Viton® or Neoprene, please consult the factory. The turnkey assembly includes custom extruded cable, Glenair Backshell, MIL-DTL-38999 Style Connectors, MIL-PRF-29504 Termini, Mil-Spec Dust-Caps and customer specified marking and labeling. Please specify minor customizations on your purchase order.

© 2022 Glenair, Inc • 1211 Air Way, Glendale, CA 91201 • 818-247-6000 • www.glenair.com • U.S. CAGE code 06324 • SuperNine® Catalog
Dimensions in Inches (millimeters) are subject to change without notice.

ASAP FIBER OPTIC CABLE SETS WITH RUGGED OVERMOLDING

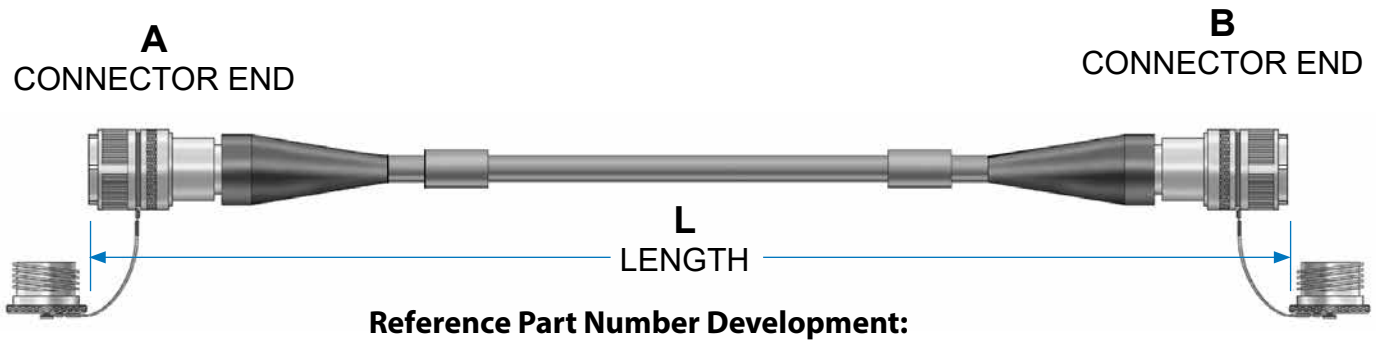

Reference Part Number Development:

FO1000 | P | 05 | P | 06 | J | 04 - 62 - 100 | L

Basic Part Number

A Terminus Type
P = Pin Terminus
S = Socket Terminus

A Connector Type
05 = D38999 Style In-Line Receptacle
06 = D38999/26 Style Plug
08 = D38999/24 Style Jam-Nut Receptacle
H7 = D38999/20 Style Wall Mount Receptacle (Std.)
S7 = D38999/20 Style Wall Mount Receptacle (Slotted)
T7 = D38999/20 Style Wall Mount Receptacle (Tapped)

B Terminus Type
P = Pin Terminus
S = Socket Terminus

B Connector Type
05 = D38999 Style In-Line Receptacle
06 = D38999/26 Style Plug
08 = D38999/24 Style Jam-Nut Receptacle
H7 = D38999/20 Style Wall Mount Receptacle (Std.)
S7 = D38999/20 Style Wall Mount Receptacle (Slotted)
T7 = D38999/20 Style Wall Mount Receptacle (Tapped)

D38999 Series III Connector Class
F = Aluminum, Electroless Nickel Plating
J = Composite, Olive Drab Cadmium Plating
K = Stainless Steel, Passivated
M = Composite, Electroless Nickel Plating
W = Aluminum, Olive Drab Cadmium Plating

Number of Fibers*
02 = 2 Fibers (Shell Size 11)
04 = 4 Fibers (Shell Size 13)
05 = 5 Fibers (Shell Size 15)
08 = 8 Fibers (Shell Size 17)
11 = 11 Fibers (Shell Size 19)
16 = 16 Fibers (Shell Size 21)
21 = 21 Fibers (Shell Size 23)
29 = 29 Fibers (Shell Size 25)
37 = 37 Fiber (Shell Size 25)

Fiber Size
09 = 9.3/125 Singlemode
50 = 50/125 Multimode
62 = 62.5/125 Multimode
10 = 100/140 Multimode
20 = 200/230 Multimode

Length in Feet

Protective Covers
L = Less Covers
Omit for with Covers

Standard Cable Make-Up:
2mm Jacketed Fiber, Polyurethane Jacketing and Overmolding, Kevlar Reinforcement, Nominal Temperature Range -40° to +85°C.
Please Reference Special Marking, Labels Or Other Identification Specifications on Your Purchase Order

*See Page G-3 for Insert Arrangements.

Please Consult Factory for Alternative Overmolding Materials Such As Viton® or Neoprene.
Part Numbering is for Reference Purposes Only. A Unique Glenair Part Number Will Be Assigned to Your Cable Order.

ADVANCED PERFORMANCE

SuperNine® Fiber optics

MIL-DTL-38999 Series III Type

Plastic and metal-core conduit assembly

D38999 Series III

ASAP FIBER OPTIC CABLE SETS



Product Features

- FEP (High-Temperature PTFE Fluoropolymer), PEEK (Halogen Free, Lightweight) and Metal-Core (EMI and Crush Proof) Versions
- Nine Standard Material Packages
- Shielded and Un-Shielded Designs
- Single and Multimode Fiber Media
- D38999 Series III Connectors in Aluminum, Composite or Stainless Steel
- Plug, Jam-Nut Receptacle, In-Line and Wall-Mount Receptacle Configurations
- Military Standard Dust Caps
- MIL-PRF-29504 Qualified Termini
- Multichannel Capability: From 2 to 37 Channels

Flexible, Lightweight, Crush Resistant—Everything You've Always Wanted in a Fiber Optic Cable

Standard Conduit Packaging

The turnkey assembly includes fiber optic wiring, MIL-DTL-38999 Style Connectors, MIL-PRF-29504 Termini, Mil-Spec Dust-Caps, Conduit Adapter, customer specified marking and labeling and your choice of conduit materials and jacketing, including the following configurations:

Table I: Conduit Materials Packaging

Code	Conduit Materials Package Description
A	FEP Fluoropolymer Convoluted Tubing Only; Standard Wall Thickness, Standard Convolutes
B	PEEK Convoluted Tubing Only; Halogen Free, Light Weight
C	FEP Convoluted Tubing with Black Dacron Outer Braided Covering
D	PEEK Convoluted Tubing with Black Dacron Outer Braided Covering
E	FEP Convoluted Tubing with Neoprene Jacket and Black Dacron Outer Braided Covering
F	PEEK Convoluted Tubing with Neoprene Jacket and Black Dacron Outer Braided Covering
G	FEP Convoluted Tubing with Tin Copper Shielding, Neoprene Jacket and Black Dacron Outer Braided Covering
H	PEEK Convoluted Tubing with Tin Copper Shielding, Neoprene Jacket and Black Dacron Outer Braided Covering
J	Brass Metal-Core Conduit, Bronze Braid and Neoprene Jacket

Consult Factory for Other Available Material Types

© 2022 Glenair, Inc • 1211 Air Way, Glendale, CA 91201 • 818-247-6000 • www.glenair.com • U.S. CAGE code 06324 • SuperNine® Catalog
Dimensions in Inches (millimeters) are subject to change without notice.

ASAP FIBER OPTIC CABLE SETS

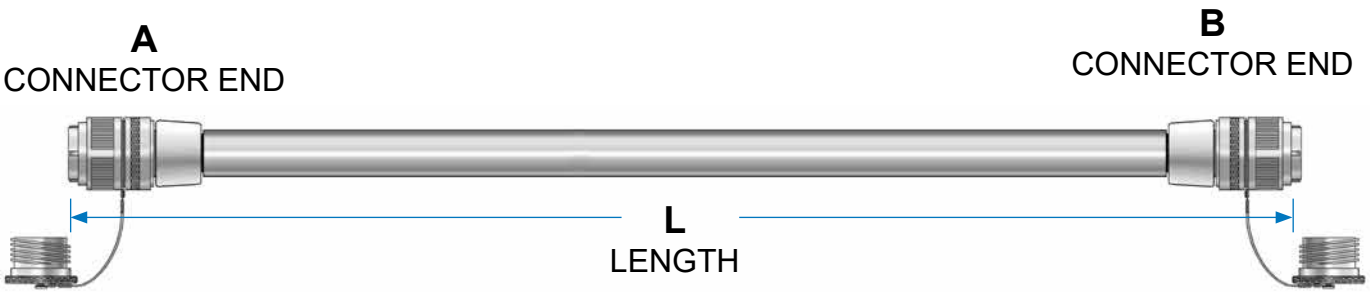

Reference Part Number Development:

FO1001 | P | 06 | P | 06 | J | 04 - 62 - 100 | G | L

Basic Part Number

A Terminus Type

P = Pin Terminus
S = Socket Terminus

A Connector Type

05 = D38999 Style In-Line Receptacle
06 = D38999/26 Style Plug
08 = D38999/24 Style Jam-Nut Receptacle
H7 = D38999/20 Style Wall Mount Receptacle (Std.)
S7 = D38999/20 Style Wall Mount Receptacle (Slotted)
T7 = D38999/20 Style Wall Mount Receptacle (Tapped)

B Terminus Type

P = Pin Terminus
S = Socket Terminus

B Connector Type

05 = D38999 Style In-Line Receptacle
06 = D38999/26 Style Plug
08 = D38999/24 Style Jam-Nut Receptacle
H7 = D38999/20 Style Wall Mount Receptacle (Std.)
S7 = D38999/20 Style Wall Mount Receptacle (Slotted)
T7 = D38999/20 Style Wall Mount Receptacle (Tapped)

D38999 Series III Connector Class

F = Aluminum, Electroless Nickel Plating
J = Composite, Olive Drab Cadmium Plating
K = Stainless Steel, Passivated
M = Composite, Electroless Nickel Plating
W = Aluminum, Olive Drab Cadmium Plating

Number of Fibers*

02 = 2 Fibers (Shell Size 11)
04 = 4 Fibers (Shell Size 13)
05 = 5 Fibers (Shell Size 15)
08 = 8 Fibers (Shell Size 17)
11 = 11 Fibers (Shell Size 19)
16 = 16 Fibers (Shell Size 21)
21 = 21 Fibers (Shell Size 23)
29 = 29 Fibers (Shell Size 25)
37 = 37 Fiber (Shell Size 25)

Fiber Size

09 = 9.3/125 Singlemode
50 = 50/125 Multimode
62 = 62.5/125 Multimode
10 = 100/140 Multimode
20 = 200/230 Multimode

Length in Feet

Conduit Materials Package (Table I)

Protective Covers

L = Less Covers
Omit for with Covers

See Table I for Standard Conduit Materials Packages. Please Reference Special Marking, Labels Or Other Identification Specifications on Your Purchase Order

*See Page B-3 for Insert Arrangements.

Part Numbering is for Reference Purposes Only. A Unique Glenair Part Number Will Be Assigned to Your Cable Order.

© 2022 Glenair, Inc • 1211 Air Way, Glendale, CA 91201 • 818-247-6000 • www.glenair.com • U.S. CAGE code 06324 • SuperNIne® Catalog

Dimensions in Inches (millimeters) are subject to change without notice.

ADVANCED PERFORMANCE

SuperNine® Fiber optics

MIL-DTL-38999 Series III Type

Field repairable banding backshell assembly

D38999 Series III

ASAP FIBER OPTIC CABLE SETS WITH BANDING BACKSHELL



Product Features

- MIL-DTL-38999 Series III Connectors in Aluminum, Composite or Stainless Steel
- Glenair Banding Backshells with Flex-Nut Strain-Relief in Aluminum, Composite or Stainless Steel
- Plug, Jam-Nut Receptacle, In-Line and Wall-Mount Receptacle Configurations
- Single and Multimode Fiber Media
- Simple, Fast Kevlar Strength-Member Termination
- Military Standard Dust Caps
- MIL-PRF-29504 Qualified Termini
- Multichannel Capability: From 2 to 37 Channels
- Custom Lengths Available
- 100% Tested

The Ideal Solution for Combined Environmental Resistance, Field Repairability and Kevlar® Termination

Reinforced Cable/Backshell Assemblies

Reinforced, extruded cable is an ideal packaging option for rugged application environments, and Glenair can extrude fiber optic cable for most high-performance applications. But while the cable is the backbone of this packaging solution, Glenair's ruggedized backshell is the component which gives the assembly its real functionality. The backshell allows for the convenient termination of cable shielding and/or the Kevlar® strength member. Unlike other backshell designs, Glenair's assembly uses a simple, easy to use banding technology to terminate cable shielding and the Kevlar material used in fiber cable extrusions. The Glenair Band-Master™ATS technology is fully tested and proven to meet pull strength requirements and is the quickest and most reliable way to terminate these materials. The Glenair backshell also provides additional strain-relief and environmental protection of the cable to connector transition with it's unique Flex-Nut style fitting. And unlike overmolded solutions, the reinforced extruded cable/backshell package allows maintenance technicians to open the cable for field service.

Backshells are selected for functionality (strain-relief, shield termination, and so on) and for material compatibility with the chosen connector. The turnkey assembly includes custom extruded cable, Glenair Backshell, MIL-DTL-38999 Style Connectors, MIL-PRF-29504 Termini, Mil-Spec Dust-Caps and customer specified marking and labeling.

*See Section L For Band-Master™ATS Tooling Information

© 2022 Glenair, Inc • 1211 Air Way, Glendale, CA 91201 • 818-247-6000 • www.glenair.com • U.S. CAGE code 06324 • SuperNine® Catalog
Dimensions in Inches (millimeters) are subject to change without notice.

SuperNine® Fiber optics

MIL-DTL-38999 Series III Type

Field repairable banding backshell assembly

ASAP FIBER OPTIC CABLE SETS WITH BANDING BACKSHELL

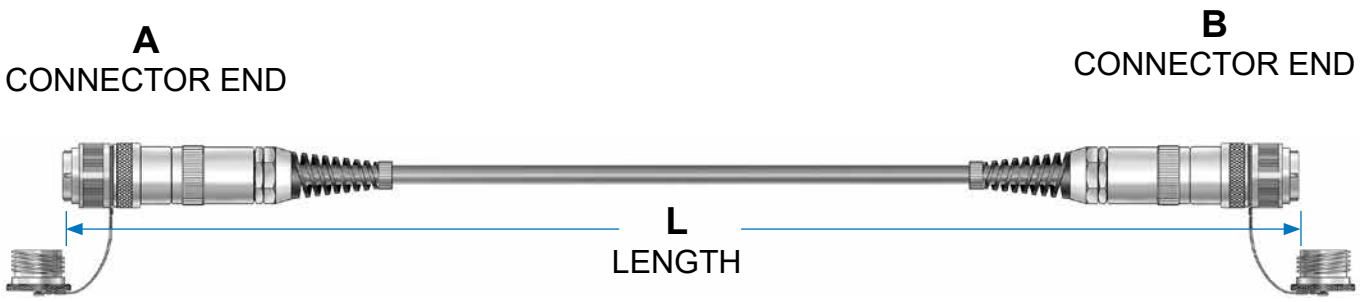

Reference Part Number Development:

FO1002 | P | 06 | P | 06 | J | 04 | - | 62 | -100 | L

Basic Part Number

A Terminus Type

P = Pin Terminus
S = Socket Terminus

A Connector Type

05 = D38999 Style In-Line Receptacle
06 = D38999/26 Style Plug
08 = D38999/24 Style Jam-Nut Receptacle
H7 = D38999/20 Style Wall Mount Receptacle (Std.)
S7 = D38999/20 Style Wall Mount Receptacle (Slotted)
T7 = D38999/20 Style Wall Mount Receptacle (Tapped)

B Terminus Type

P = Pin Terminus
S = Socket Terminus

B Connector Type

05 = D38999 Style In-Line Receptacle
06 = D38999/26 Style Plug
08 = D38999/24 Style Jam-Nut Receptacle
H7 = D38999/20 Style Wall Mount Receptacle (Std.)
S7 = D38999/20 Style Wall Mount Receptacle (Slotted)
T7 = D38999/20 Style Wall Mount Receptacle (Tapped)

D38999 Series III Connector Class

F = Aluminum, Electroless Nickel Plating
J = Composite, Olive Drab Cadmium Plating
K = Stainless Steel, Passivated
M = Composite, Electroless Nickel Plating
W = Aluminum, Olive Drab Cadmium Plating

Number of Fibers*

02 = 2 Fibers (Shell Size 11)
04 = 4 Fibers (Shell Size 13)
05 = 5 Fibers (Shell Size 15)
08 = 8 Fibers (Shell Size 17)
11 = 11 Fibers (Shell Size 19)
16 = 16 Fibers (Shell Size 21)
21 = 21 Fibers (Shell Size 23)
29 = 29 Fibers (Shell Size 25)
37 = 37 Fiber (Shell Size 25)

Fiber Size

09 = 9.3/125 Singlemode
50 = 50/125 Multimode
62 = 62.5/125 Multimode
10 = 100/140 Multimode
20 = 200/230 Multimode

Length in Feet

Protective Covers

L = Less Covers
Omit for with Covers

See Table I for Standard Conduit Materials Packages. Please Reference Special Marking, Labels Or Other Identification Specifications on Your Purchase Order

*See Page G-3 for Insert Arrangements.

Part Numbering is for Reference Purposes Only. A Unique Glenair Part Number Will Be Assigned to Your Cable Order.

© 2022 Glenair, Inc • 1211 Air Way, Glendale, CA 91201 • 818-247-6000 • www.glenair.com • U.S. CAGE code 06324 • SuperNIne® Catalog

Dimensions in Inches (millimeters) are subject to change without notice.

ADVANCED PERFORMANCE

SuperNine® Fiber optics

MIL-DTL-38999 Series III Type

Inside-the-box receptacle/pigtail assembly

D38999 Series III

ASAP FIBER OPTIC CABLE SET WITH D38999 SERIES III TO ST, FC, SC, LC & SMA

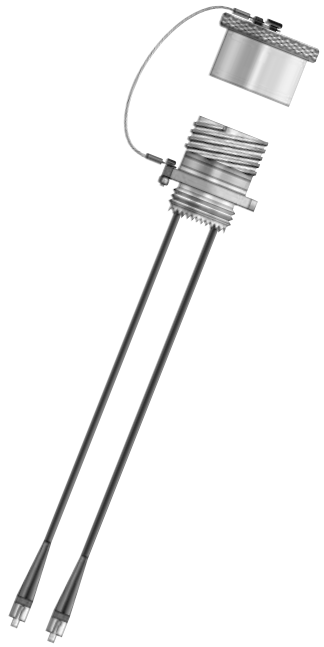

Product Features

- Jam-Nut and Wall Mount D38999 Series III Type Fiber Optic Receptacle Connectors in Aluminum, Composite or Stainless Steel
- ST, FC, SC, LC and SMA to D38999 Series III Configurations
- Single and Multimode Fiber Media
- Military Standard Dust Caps
- MIL-PRF-29504 Approved Termini
- Multichannel Capability: From 2 to 37 Channels
- Custom Lengths Available

Glenair Terminated and Optically Tested Receptacle/Pigtail Assemblies Are Ready When You Are

Inside-the-Box

The packaging and layout of a fiber optic interconnect assembly can vary widely depending on the application environment. Fiber optics deployed in military avionics, for example, may take the form of a Mil-Spec receptacle and simplex pigtail connector assembly when fiber is used to interconnect the optical transmitter/receiver inside an equipment enclosure to the outside world. When fiber leads are used within equipment enclosures or other protected environments, the interconnect assembly generally looks something like the assembly featured here: A wall mount or jam nut mount receptacle connector (“A”) with simplex fiber leads ("B"). The receptacle connector is used to penetrate the enclosure and mate to the external environmental plug connector. The simplex leads within the protected enclosure commonly route to the transceiver optical device, and are terminated to common commercial connectors such as ST, FC, SC, LC (or other) connectors at the "B" end. Glenair *ASAP* Receptacle/Pigtail Fiber Optic Assemblies are ideal for applications of this type, and are available with accelerated lead-times. The turnkey assembly includes fiber optic wiring, MIL-DTL-38999 Style Connector, MIL-PRF-29504 Termini, Mil-Spec Dust-Caps and customer specified marking and labeling.

© 2022 Glenair, Inc • 1211 Air Way, Glendale, CA 91201 • 818-247-6000 • www.glenair.com • U.S. CAGE code 06324 • SuperNine® Catalog
Dimensions in Inches (millimeters) are subject to change without notice.

SuperNine® Fiber optics

MIL-DTL-38999 Series III Type

Inside-the-box receptacle/pigtail assembly

ASAP FIBER OPTIC CABLE SET WITH D38999 SERIES III TO ST, FC, SC, LC & SMA

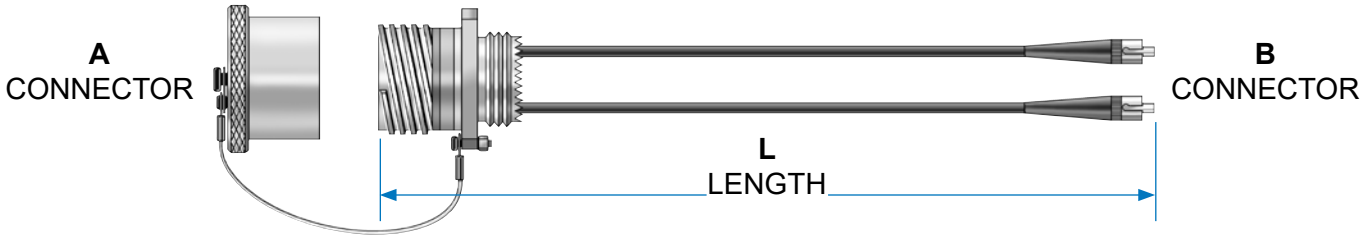

Reference Part Number Development:

FO1003 P - 08 - 1 W 02 62 48 L

Basic part Number

Terminus Type

P = Pin Terminus
S = Socket Terminus

A Connector Type

06 = D38999/26 Style Plug
08 = D38999/24 Style Jam-Nut Receptacle
H7 = D38999/20 Style Wall Mount Receptacle (Std.)
S7 = D38999/20 Style Wall Mount Receptacle (Slotted)
T7 = D38999/20 Style Wall Mount Receptacle (Tapped)

B Connector Type

0 = ST M83522 Style
1 = ST Connector
2 = FC Connector
3 = SC Connector
4 = SC Duplex
5 = SMA Connector (906 Type)
6 = SMA Connector (905 Type)
7 = LC Connector
8 = LC Duplex
9 = Customer Specified

D38999 Series III Connector Class

F = Aluminum, Electroless Nickel Plating
J = Composite, Olive Drab Cadmium Plating
K = Stainless Steel, Passivated
M = Composite, Electroless Nickel Plating
W = Aluminum, Olive Drab Cadmium Plating

Number of Fibers*

02 = 2 Fibers (Shell Size 11)
04 = 4 Fibers (Shell Size 13)
05 = 5 Fibers (Shell Size 15)
08 = 8 Fibers (Shell Size 17)
11 = 11 Fibers (Shell Size 19)
16 = 16 Fibers (Shell Size 21)
21 = 21 Fibers (Shell Size 23)
29 = 29 Fibers (Shell Size 25)
37 = 37 Fiber (Shell Size 25)

Fiber Size

09 = 9.3/125 Singlemode
50 = 50/125 Multimode
62 = 62.5/125 Multimode
10 = 100/140 Multimode
20 = 200/230 Multimode

Length in Inches

6 Inch Minimum

Protective Covers

L = Less Covers
Omit for with Covers

Please Reference Special Marking,
Labels Or Other Identification Specifications on Your Purchase Order.
Unless Indicated, "B"
Connector Identification Will Follow
"A" Connector Pin Designations.

*See Page G-3 for Insert Arrangements

Part Numbering is for Reference Purposes Only. A Unique Glenair Part Number Will Be Assigned to Your Cable Order.

© 2022 Glenair, Inc • 1211 Air Way, Glendale, CA 91201 • 818-247-6000 • www.glenair.com • U.S. CAGE code 06324 • SuperNIne® Catalog

Dimensions in Inches (millimeters) are subject to change without notice.

ADVANCED PERFORMANCE

SuperNine® Fiber optics

MIL-DTL-38999 Series III Type

Inside-the-box receptacle/pigtail assembly

D38999 Series III

ASAP FIBER OPTIC CABLE SETS WITH D38999 SERIES III TO ST, FC, SC, LC & SMA AND FIBERCON® BACKSHELL



Product Features

- Jam-Nut and Wall Mount D38999 Series III Type Fiber Optic Receptacle Connectors in Aluminum, Composite or Stainless Steel
- ST, FC, SC, LC and SMA to D38999 Series III Configurations
- Grommet Sealing and Micro-Alignment Backshells in Aluminum, Composite and Stainless Steel
- Singlemode and Multimode Fiber Media
- Military Standard Dust Caps
- MIL-PRF-29504 Approved Termini
- Multichannel Capability: From 2 to 37 Channels
- Custom Lengths Available

Because Sometimes Strain-Relief and Exact Fiber Alignment are a Requirement—Even *Inside* the Box

Termini Retraction and Its Effect On Micro-Bending

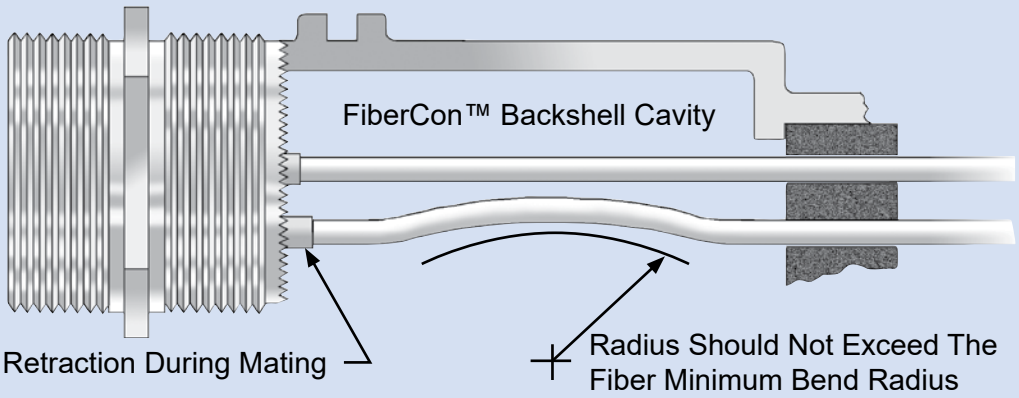

The Glenair FiberCon® Backshell Assembly

Glenair can supply receptacle/pigtail assemblies with a FiberCon™ Backshell that protects fiber terminations and insures exact alignment of the fiber optic termini. The grommeted backshell design prevents micro-bending of the fibers while providing optimum strain relief to the overall cable. The unique design is available only from Glenair and is available as a component part of this ASAP cable assembly. The turnkey assembly includes fiber optic wiring, Glenair Backshell, MIL-DTL-38999 Style Connector, MIL-PRF-29504 Termini, Mil-Spec Dust-Caps and customer specified marking and labeling.

© 2022 Glenair, Inc • 1211 Air Way, Glendale, CA 91201 • 818-247-6000 • www.glenair.com • U.S. CAGE code 06324 • SuperNine® Catalog
Dimensions in Inches (millimeters) are subject to change without notice.

SuperNine® Fiber optics

MIL-DTL-38999 Series III Type

Inside-the-box receptacle/pigtail assembly

ASAP FIBER OPTIC CABLE SETS WITH D38999 SERIES III TO ST, FC, SC, LC & SMA AND FIBERCON® BACKSHELL

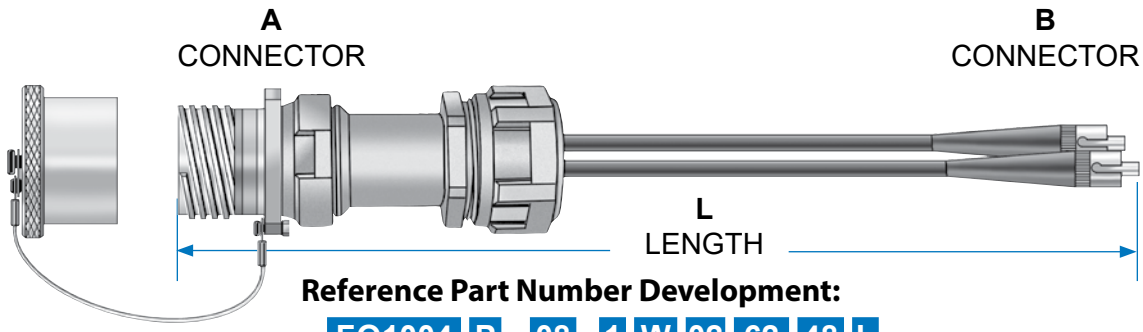

Reference Part Number Development:

FO1004	P	-	08	-	1	W	02	62	48	L

Basic part Number

Terminus Type

P = Pin Terminus
S = Socket Terminus

A Connector Type

06 = D38999/26 Style Plug
08 = D38999/24 Style Jam-Nut Receptacle
H7 = D38999/20 Style Wall Mount Receptacle (Std.)
S7 = D38999/20 Style Wall Mount Receptacle (Slotted)
T7 = D38999/20 Style Wall Mount Receptacle (Tapped)

B Connector Type

0 = ST M83522 Style
1 = ST Connector
2 = FC Connector
3 = SC Connector
4 = SC Duplex
5 = SMA Connector (906 Type)
6 = SMA Connector (905 Type)
7 = LC Connector
8 = LC Duplex
9 = Customer Specified

D38999 Series III Connector Class

F = Aluminum, Electroless Nickel Plating
J = Composite, Olive Drab Cadmium Plating
K = Stainless Steel, Passivated
M = Composite, Electroless Nickel Plating
W = Aluminum, Olive Drab Cadmium Plating

Number of Fibers*

02 = 2 Fibers (Shell Size 11)
04 = 4 Fibers (Shell Size 13)
05 = 5 Fibers (Shell Size 15)
08 = 8 Fibers (Shell Size 17)
11 = 11 Fibers (Shell Size 19)
16 = 16 Fibers (Shell Size 21)
21 = 21 Fibers (Shell Size 23)
29 = 29 Fibers (Shell Size 25)
37 = 37 Fiber (Shell Size 25)

Fiber Size

09 = 9.3/125 Singlemode
50 = 50/125 Multimode
62 = 62.5/125 Multimode
10 = 100/140 Multimode
20 = 200/230 Multimode

Length in Inches

6 Inch Minimum

Protective Covers

L = Less Covers
Omit for with Covers

Please Reference Special Marking,
Labels Or Other Identification Specifications on Your Purchase Order.
Unless Indicated, "B"
Connector Identification Will Follow
"A" Connector Pin Designations.

*See Page G-3 for Insert Arrangements

Part Numbering is for Reference Purposes Only. A Unique Glenair Part Number Will Be Assigned to Your Cable Order.

© 2022 Glenair, Inc • 1211 Air Way, Glendale, CA 91201 • 818-247-6000 • www.glenair.com • U.S. CAGE code 06324 • SuperNIne® Catalog

Dimensions in Inches (millimeters) are subject to change without notice.

SuperNine® Fiber optics

MIL-DTL-38999 Series III Type

Inside-the-box receptacle/pigtail assembly

D38999 Series III

ASAP FIBER OPTIC CABLE SETS WITH LOW-PROFILE BACKSHELL AND CONDUIT D38999 SERIES III TO ST, FC, SC, LC & SMA



Product Features

- Jam-Nut and Wall Mount D38999 Series III Type Fiber Optic Receptacle Connectors in Aluminum, Composite or Stainless Steel
- ST, FC, SC, LC and SMA to D38999 Series III Configurations
- High-Temperature and Halogen Free Protective Convoluted Tubing Options
- Single and Multimode Fiber Media
- Military Standard Dust Caps
- MIL-PRF-29504 Approved Termini
- Multichannel Capability: From 2 to 37 Channels
- Custom Overall and Break-out Lengths Available

The Perfect Amount of Mechanical Protection for Fiber Media in Non-Environmental Applications

Protective Conduit

The use of a short length of conduit and a low-profile connector/conduit adapter is recommended in applications where a heat or abrasion source within the box may damage the fiber media. In most cases, analysis of the available space is critical to insure the additional interconnect hardware does not interfere with the electronics package inside the box. The packaging of a pigtail assembly with a protective length of conduit is appropriate for all types of equipment—such as radar units, cameras, shipboard consoles, antennas and so on—in which the routing of the fiber cable within the equipment enclosure may expose the media to damage. This Glenair *ASAP* Fiber Optic Pigtail Assembly is well suited whenever the prevention of damage to the fiber media inside the box is a design requirement. The turnkey assembly includes fiber optic wiring, Glenair Conduit Adapter, High-Temperature Convoluted Tubing and Shrink Boot, MIL-DTL-38999 Style Connector, MIL-PRF-29504 Termini, Mil-Spec Dust-Caps and customer specified marking and labeling.

© 2022 Glenair, Inc • 1211 Air Way, Glendale, CA 91201 • 818-247-6000 • www.glenair.com • U.S. CAGE code 06324 • SuperNine® Catalog
Dimensions in Inches (millimeters) are subject to change without notice.

SuperNine® Fiber optics

MIL-DTL-38999 Series III Type

Inside-the-box receptacle/pigtail assembly

ASAP FIBER OPTIC CABLE SETS WITH LOW-PROFILE BACKSHELL AND CONDUIT D38999 SERIES III TO ST, FC, SC, LC & SMA

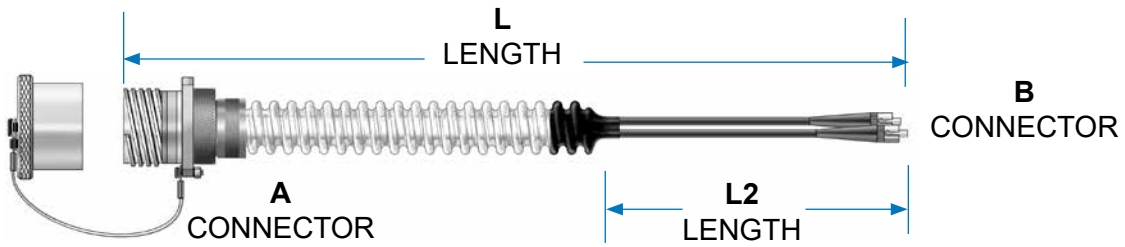

Reference Part Number Development:

FO1005 P - 08 - 1 W 02 62 6 12 L

Basic part Number

Terminus Type
P = Pin Terminus
S = Socket Terminus

A Connector Type
06 = D38999/26 Style Plug
08 = D38999/24 Style Jam-Nut Receptacle
H7 = D38999/20 Style Wall Mount Receptacle (Std.)
S7 = D38999/20 Style Wall Mount Receptacle (Slotted)
T7 = D38999/20 Style Wall Mount Receptacle (Tapped)

B Connector Type
0 = ST M83522 Style
1 = ST Connector
2 = FC Connector
3 = SC Connector
4 = SC Duplex
5 = SMA Connector (906 Type)
6 = SMA Connector (905 Type)
7 = LC Connector
8 = LC Duplex
9 = Customer Specified

D38999 Series III Connector Class
F = Aluminum, Electroless Nickel Plating
J = Composite, Olive Drab Cadmium Plating
K = Stainless Steel, Passivated
M = Composite, Electroless Nickel Plating
W = Aluminum, Olive Drab Cadmium Plating

Protective Covers
L = Less Covers
Omit for with Covers

"L2" Length in Inches

"L" Length in Feet
6 Inch Minimum

Fiber Size
09 = 9.3/125 Singlemode
50 = 50/125 Multimode
62 = 62.5/125 Multimode
10 = 100/140 Multimode
20 = 200/230 Multimode

Number of Fibers*
02 = 2 Fibers (Shell Size 11)
04 = 4 Fibers (Shell Size 13)
05 = 5 Fibers (Shell Size 15)
08 = 8 Fibers (Shell Size 17)
11 = 11 Fibers (Shell Size 19)
16 = 16 Fibers (Shell Size 21)
21 = 21 Fibers (Shell Size 23)
29 = 29 Fibers (Shell Size 25)
37 = 37 Fiber (Shell Size 25)

Please Reference Special Marking,
Labels Or Other Identification Specifications on Your Purchase Order.
Unless Indicated, "B"
Connector Identification Will Follow
"A" Connector Pin Designations.

*See Page G-3 for Insert Arrangements

Part Numbering is for Reference Purposes Only. A Unique Glenair Part Number Will Be Assigned to Your Cable Order.

© 2022 Glenair, Inc • 1211 Air Way, Glendale, CA 91201 • 818-247-6000 • www.glenair.com • U.S. CAGE code 06324 • SuperNIne® Catalog

Dimensions in Inches (millimeters) are subject to change without notice.

SERIES 23
BACKSHELLS AND ACCESSORIES



SuperNine®

High-performance composite thermoplastic and precision-machined metal connector backshells and accessories



Nowhere in the world does anyone supply such a complete range of high-performance backshells and connector accessories for mil-aero interconnect systems. Glenair is able to offer our SuperNine customers both military standard 85049 backshells and accessories, as well as unique special-purpose EMI/RFI and environmental backshells designed for higher performance requirements. This section of the SuperNine catalog presents just a few of our most innovative backshell designs, including our 3-in-1 Swing Arm™ strain relief, and several lightweight and corrosion-free composite thermoplastic solutions. Glenair's high availability business model ensures all popular part numbers from this section of the catalog are in-stock and ready for immediate, same-day shipment.

Glenair®

Glenair, Inc.
1211 Air Way
Glendale, CA 91201-2497
818-247-6000
sales@glenair.com
www.glenair.com

ADVANCED PERFORMANCE

SuperNine® Backshells and accessories

MIL-DTL-38999 Series III Type

Product selection guide

Backshells and Accessories

Overview H-2
MS backshells and accessories H-4
Interface standards H-6
Swing-Arm assembly H-26



310-045 H-8

Composite shrink boot adapter standard profile with self-locking rotatable coupling nut.



440-143 H-9

Composite EMI/RFI backshell with Qwik-Ty strain relief, banding platform, and shrink boot groove.



440-144 H-11

Composite micro banding backshell with shrink boot groove,and self-locking coupling.



470-017 H-13

StarShield™ EMI/RFI composite shield termination backshell.

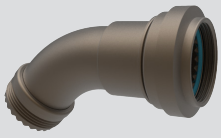

320H*030 H-15

Extender backshell, self-locking. Straight, 45°, or 90° with extended radius angular function. For use with size 8 contacts.

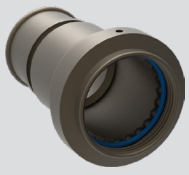

440H*233 H-16

Banding backshell, self-locking. Straight, 45°, or 90° extended radius angular function. For use with size 8 contacts.

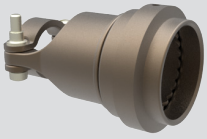

620HS090 H-18

Strain relief saddle clamp backshell, self-locking. For use with size 8 contacts.



440HS232 H-19

EMI/RFI strain relief saddle clamp backshell, self-locking. For use with size 8 contacts.



443H*042 H-20

EMI/RFI Environmental band-in-a-can, saddle clamp backshell. Straight, 45°, or 90° with extended radius angular function. For size 8 contacts.



770-003 H-22

Series 77 heat shrink boots.



870H001 H-24

Swing-Arm Saddle Clamp composite, aluminum, or stainless steel.



870H002 H-26

Swing-Arm Saddle Clamp composite, with braid sock and metallic interface ring for EMI shield termination.



870H005 H-28

Swing-Arm Saddle Clamp aluminum or stainless steel, with drop-in banding adapter.



871H004 H-30

Swing-Arm Flex Clamp composite, flexible arms, with drop-in banding adapter.

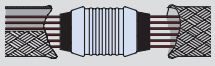

687-749 H-32

Banding Split Ring for use in Strain Relief Assembly Procedure.

© 2022 Glenair, Inc • 1211 Air Way, Glendale, CA 91201 • 818-247-6000 • www.glenair.com • U.S. CAGE code 06324 • SuperNine® Catalog

Dimensions in Inches (millimeters) are subject to change without notice.

ADVANCED PERFORMANCE

SuperNine® Backshells and accessories

MIL-DTL-38999 Series III Type

Product selection guide

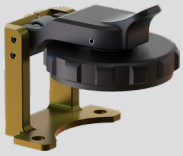

667-448 H-34

ProSeal™ threaded closure seal, full environmental protective cover.

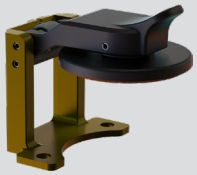

667-449 H-36

Pressure seal, dust and immersion resistant protective cover.



660-049 and 660-050 H-38

Composite protective covers.



239-200 H-40

Plug cover for 233-215 piston sealed connector.



660-121 H-41

Composite self-locking receptacle covers.



239-202 H-42

Thick jam nut for .125" panels

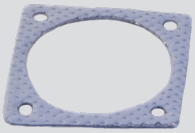

239-204 H-43

Flange gasket. Available in 14 material options.

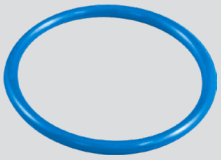

239-205 H-44

Jam-nut O-ring. Available in 13 material options.

© 2022 Glenair, Inc • 1211 Air Way, Glendale, CA 91201 • 818-247-6000 • www.glenair.com • U.S. CAGE code 06324 • SuperNine® Catalog
Dimensions in Inches (millimeters) are subject to change without notice.



SERIES 23

SuperNine®

Rugged metal and lightweight composite backshells and accessories for every application requirement

- **Tens of thousands of popular part numbers in inventory ready for same-day shipment**
- **Fast turnaround on non-standard and made-to-order accessories, typically only two to three weeks**
- **RoHS compliant plating options**



Space Grade Quick Clamp Backshells



Series 620 Strain Relief Clamps



Ultra Low-Profile EMI/RFI Backshells



StarShield "Zero Length" Individual Shield Termination Backshells



Self-Locking and Standard Protective Covers



High-Performance Banding Backshells

© 2022 Glenair, Inc • 1211 Air Way, Glendale, CA 91201 • 818-247-6000 • www.glenair.com • U.S. CAGE code 06324 • SuperNine® Catalog

Dimensions in Inches (millimeters) are subject to change without notice.

ADVANCED PERFORMANCE

SuperNine® Backshells and accessories

MIL-DTL-38999 Series III Type

High-performance connector accessories

Conductively-plated composite accessories: Outstanding corrosion resistance, weight reduction, and durability

- **High temperature, high strength engineering composite thermoplastics for maximum strength and durability**
- **Total immunity to galvanic corrosion**
- **Up to 70% weight reduction compared to standard metal connectors and accessories**
- **Hundreds of innovative, tooled designs**
- **All popular part numbers in stock and ready for immediate, same-day shipment**
- **Conductive platings including RoHS versions**





Glenair composite interconnect components are manufactured from 30% glass fiber polyetherimide (PEI), an amorphous thermoplastic with outstanding heat and chemical resistance and high strength. At room temperature, the 30% glass-filled PEI exhibits strength far beyond that of most engineering thermoplastics, with a tensile strength yield of over 15,000 psi. The PEI material meets the most stringent outgassing and flammability requirements.



Composite Swing-Arm™ EMI/RFI Shield Sock



Composite Piggyback Accessory with Partially Recovered Boot



Composite Swing-Arm™ Strain Relief



Composite Shrink Boot/ Banding Adapter



Composite Plug and Receptacle Protective Covers

1000 HOUR GREY™ NI-PTFE NICKEL FLUOROCARBON POLYMER PLATING

The MIL-DTL-38999 Rev L detail specification lists Nickel Fluorocarbon Polymer as a qualified Cadmium free plating alternative. This highly conductive, RoHS compliant plating formula is now available on composite interconnect products from Glenair and offers the following benefits in harsh-environment applications:

- 2000+ hour salt spray
- Cadmium free
- Outstanding mating lubricity
- Hexavalent Chromium free
- 500+ mating cycles
- Non-Magnetic



© 2022 Glenair, Inc • 1211 Air Way, Glendale, CA 91201 • 818-247-6000 • www.glenair.com • U.S. CAGE code 06324 • SuperNine® Catalog
Dimensions in Inches (millimeters) are subject to change without notice.

SuperNine® Backshells and accessories

MIL-DTL-38999 Series III Type

MIL-DTIL-38999 mil-spec backshells and accessories

Miltary Connector Specification	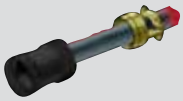 36 Non-Environ.Strain Relief Backshells	 38 EMI/RFI Non-Environ. Backshells	 39 EMI/RFI Environmental Backshells	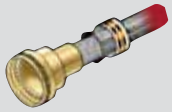 44 Crimp Ring Backshells	 44 Banding Backshells
MIL-DTL-38999 Series III	M85049/21 Str.	M85049/19 Str.	M85049/18 Str. M85049/78 45° M85049/79 90°	M85049/20 Str.	M85049/88 Str. M85049/88N Str. M85049/89 45° M85049/89N 45° M85049/90 90° M85049/90N 90°

Miltary Connector Specification	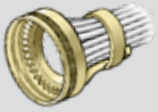 45 Qwik-Ty Strain Reliefs		 62 Strain Reliefs		 68 Mounting Flanges and Gaskets
	Non-Self-Locking	Self-Locking	Non-Self-Locking	Self-Locking	
MIL-DTL-38999 Series III	M85049/15- 45° M85049/16- 90°	No Ground Lug M85049/15S 45° M85049/16S 90° With Ground Lug M85049/15G 45° M85049/15H 45° M85049/16G 90° M85049/16H 90°	M85049/38 Str. M85049/124 Str. M85049/39 90° M85049/126 90°	M85049/38S Str. M85049/91 Str. M85049/124S Str. M85049/39S 90° M85049/92 90° M85049/126S 90°	M85049/94 Full M85049/95 3/4 M85049/96 1/4 (M85528/1) Full (M85528/2) 3/4 (M85528/3) 1/4

Miltary Connector Specification	 65 Dummy Stowage Receptacles	 66 Protective Plug Covers	 66 Protective Receptacle Covers	 68 Jam Nuts
MIL-DTL-38999 Series III	D38999/22	D38999/32 Threaded	D38999/33 Threaded	D38999/28

Torque Values for Cable Clamp Screws	
Required value in In-Lbs for corrosion resistant/steel plated screws only	
Screw Size	In Aluminum or Corrosion Resistant Steel
2-56	1.5/2.5
4-40	3.5/4.5
6-32	5.0/7.0
8-32	7.0/9.0
10-32	9.0/11.0
.250-20	11.0/13.0

Cable Clamp with Grommet - Torque Values (See Note 3)			
Torque Requirements in In-Lbs		Torque Requirements in In-Lbs	
Clamp Size	Torque Min/Max Values	Clamp Size	Torque Min/Max Values
3	30/40	16	40/60
4	30/40	20	40/60
6	35/55	24	80/100
8	35/55	28	80/100
10	35/55	32	80/100
12	40/60	40	80/100

© 2022 Glenair, Inc • 1211 Air Way, Glendale, CA 91201 • 818-247-6000 • www.glenair.com • U.S. CAGE code 06324 • SuperNine® Catalog
Dimensions in Inches (millimeters) are subject to change without notice.

SuperNine® Backshells and accessories

MIL-DTL-38999 Series III Type

MIL-DTIL-38999 mil-spec backshells and accessories

Composite Thermoplastic Backshells and Accessories						
Miltary Connector Specification	 Three-Finger Strain Relief	 Banding Adapters	 Cable Clamp Strain Relief	Dust Caps 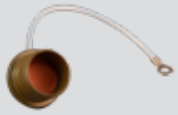 Plug	 Receptacle	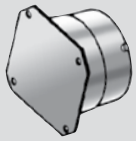 Dummy Stowage Receptacles
MIL-DTL-38999 Series III	M85049/45 M85049/46	M85049/88 M85049/89 M85049/90	M85049/91 M85049/92	D38999/32 Series III Only	D38999/33 Series III Only	D38999/22

Miltary Connector Specification	31 Shrink Boot Adapters	319 Shield-Sock Backshells	
		Non-Self-Locking	Self-Locking
MIL-DTL-38999 Series III	M85049/69 Str.	M85049/115 Str. M85049/117 90°	M85049/103 Str.* M85049/104 45°* M85049/105 90°* M85049/115S Str. M85049/117S 90°

Miltary Connector Specification	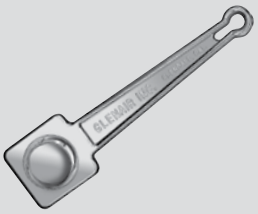 60 Connector Wrenches	 60 Connector Sockets	 61 "E" Nuts	
			Non-Self-Locking	Self-Locking
MIL-DTL-38999 Series III	TG90*	600H005*	M85049/14-	M85049/14S

Installation Torque Values for Circular Connector Accessories		
Shell Sizes	MIL-DTL-38999 Series III	Composite Material Coupling Threads (See Note 1)
8, 9, A	51/61	35
3, 10, 10SL, 11, B	71/81	35
7, 12, 12S, 13, C	103/113	45
14, 14S, 15, D	111/121	45
16, 16S, 17, E	111/121	45
18, 19, 27, F	111/121	45
20, 21, 37, G	131/141	80
22, 23, H	131/141	80

Installation Torque Values for Circular Connector Accessories		
Shell Sizes	MIL-DTL-38999 Series III	Composite Material Coupling Threads (See Note 1)
24, 25, 61, J	131/141	80
28, 29	143/153	120
32, 33	143/153	120
36	142/153	120
40	159/169	N/A
44	159/169	N/A
48	159/169	N/A

1) Use Glenair 600-091 and 600-007 Torque Tools when tightening hexagonal composite accessory couplings.
2) For additional guidance or values/conditions not listed, refer to SAE AIR6151.
3) EMI/RFI shielding terminated with conical metal ferrule(s) should employ a minimum recommended torque of 35 in-lb.

© 2022 Glenair, Inc • 1211 Air Way, Glendale, CA 91201 • 818-247-6000 • www.glenair.com • U.S. CAGE code 06324 • SuperNine® Catalog
Dimensions in Inches (millimeters) are subject to change without notice.

SuperNine® Backshells and accessories

MIL-DTL-38999 Series III Type

Connector-to-backshell composite accessory interface data

Circular Connector Front End Dimensional Details					
Shell Size Code	Shell Size Reference	A Thread Ref	B Dia Max	C Dia Max	D Flats Ref
9	A	M12 X 1 - 6H	.65 (16.5)	.86 (21.8)	.75 (19.1)
11	B	M15 x 1 - 6H	.77 (19.6)	.98 (24.9)	.88 (22.2)
13	C	M18 x 1 - 6H	.89 (22.6)	1.16 (29.4)	1.00 (25.4)
15	D	M22 x 1 - 6H	1.03 (26.2)	1.28 (32.5)	1.13 (28.6)
17	E	M25 x 1 - 6H	1.15 (29.2)	1.41 (35.7)	1.25 (31.8)
19	F	M28 x 1 - 6H	1.28 (32.5)	1.52 (38.5)	1.38 (35.1)
21	G	M31 x 1 - 6H	1.41 (35.8)	1.64 (41.7)	1.50 (38.1)
23	H	M34 x 1 - 6H	1.53 (38.9)	1.77 (44.9)	1.63 (41.3)
25	J	M37 x 1 - 6H	1.66 (42.2)	1.89 (48.0)	1.75 (44.5)

Connector Designator **H**

SPECIFICATION
MIL-DTL-38999
EN3645

SERIES
III & IV

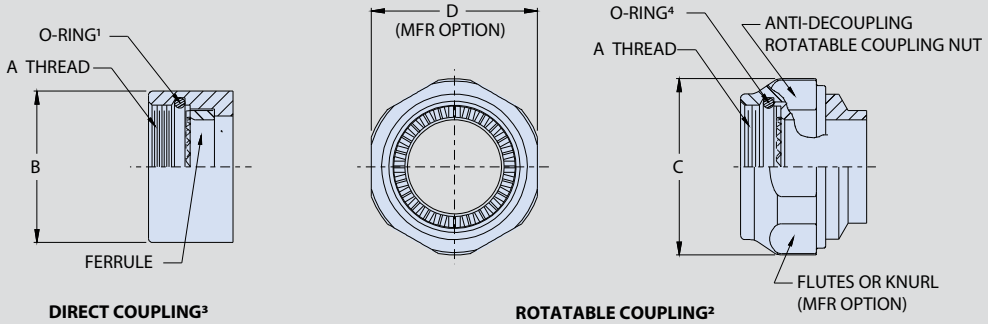

DIRECT COUPLING³

ROTATABLE COUPLING²

NOTES

1. Direct coupling supplied with O-ring for moisture sealing.
2. To add O-ring to rotatable coupling append modifier code 101A to end of part number
3. Consult factory for direct coupling part numbers.
4. Connector shell size are for reference only; do not use in part numbers.
5. Consult factory for accessory interface data not listed.
6. Use Glenair 600-091 or 600-157 tool to tighten coupling nut. Rubber jaw pliers or strap wrench may damage the parts.

© 2022 Glenair, Inc • 1211 Air Way, Glendale, CA 91201 • 818-247-6000 • www.glenair.com • U.S. CAGE code 06324 • SuperNine® Catalog
Dimensions in Inches (millimeters) are subject to change without notice.

SuperNine® Backshells and accessories

MIL-DTL-38999 Series III Type

310-045 Composite shrink boot adapter

COMPOSITE SHRINK BOOT ADAPTER WITH SELF-LOCKING COUPLING NUT

Part Number Development								
Sample Part Number	310	H	S	045	XM	15	D	T

Product Series	Composite shrink boot adapter
Connector Designator	**H** = MIL-DTL-38999 Series III
Angular Function	**S** = Straight
Basic Number	**045**
Finish	**XB** = No plating, black **XD** = No Plating, Desert Tan **XM** = 2000 hr, Electroless Nickel **XW** = 2000 hr, Cadmium O/D over Electroless Nickel **XMT** = 2000 hr, Nickel-PTFE *1000 Hour Gray*
Connector Shell Size	See dimensions table
Drain Holes	**D** = Drain holes, omit for none.
Shrink Boot Option	**T** = Shrink boot, omit for none.



Composite

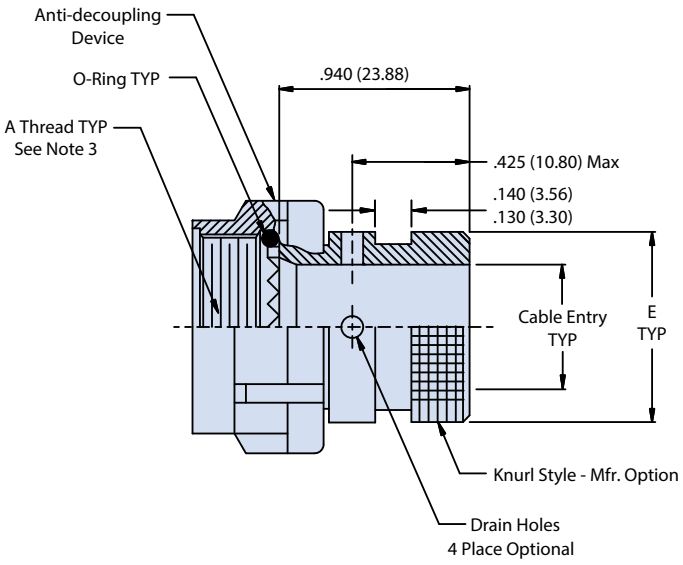

Dimensions			
H Code Shell Size	E Max	Cable Entry Min.	Shrink Boot
09	.533 (13.5)	.250 (6.4)	770-003S102
11	.605 (15.4)	.355 (9.0)	770-003S103
13	.774 (19.7)	.491 (12.5)	770-003S103
15	.838 (21.3)	.565 (14.4)	770-003S103
17	.963 (24.5)	.690 (17.5)	770-003S104
19	1.042 (26.5)	.769 (19.5)	770-003S104
21	1.217 (30.9)	.894 (22.7)	770-003S106
23	1.355 (34.4)	1.019 (25.9)	770-003S107
25	1.443 (36.7)	1.134 (28.8)	770-003S107

NOTES

1. See composite accessory interface data on page H-6
2. Straight shrink boot supplied with "T" option. See dimensions table for part number
3. O-ring standard for H code adapter
4. Material/finish
   - Adapter: high temperature thermoplastic, natural/see part number development, finish
   - Coupling nut: high temperature thermoplastic, black/N.A.
   - O-ring: silicone/N.A.
   - Shrink boot: elastomeric/N.A.

© 2022 Glenair, Inc • 1211 Air Way, Glendale, CA 91201 • 818-247-6000 • www.glenair.com • U.S. CAGE code 06324 • SuperNine® Catalog
Dimensions in Inches (millimeters) are subject to change without notice.

SuperNine® Backshells and accessories

MIL-DTL-38999 Series III Type

440-143 Composite Micro Banding Backshell with Qwik-Ty

Part Number Development											
Sample Part Number	440	H	S	143	XM	15	09	D	B	T	S
Product Series	**440** = Qwik-Ty EMI/RFI micro-banding backshells										
Connector Designator	**H** = MIL-DTL-38999 Series III										
Angular Function and Profile	**A** = 90° Standard Profile **E** = 90° Low Profile, Split **W** = 90° Low Profile, Solid **D** = 90° Med Profile, Split **S** = Straight **T** = 45° Elbow										
Basic Number	**143**										
Finish	**XB** = No plating, black **XM** = 2000 hr, Electroless Nickel **XD** = No Plating, Desert Tan **XMT** = 2000 hr, Nickel-PTFE *1000 Hour Gray* **XW** = 2000 hr, Cadmium O/D over Electroless Nickel										
Connector Shell Size[1]	See dimensions table										
Cable Entry Code[6]	See cable entry code table; omit for symbol D, W and E low profile 90° configurations.										
Drain Hole Option	**D** = With drain hole, omit if not required										
Band Option	**B** = Supplied with band, omit for none.										
Shrink Boot Option	**T** = Shrink boot, omit for none.										
Shield Termination Slot[7]	**S** = With slot, omit for none.										

Dimensions											
Shell Size	Entry Code*	K ± .03	L[6]	M[6]	N Max	P ±.09	R ±.09	S Max	T Max	W[6]	X (Max)[6]
09	04	1.042 (26.5)	.304 (7.7)	.160 (4.1)	.63 (16.0)	.69 (17.5)	.88 (22.4)	1.36 (34.5)	.81 (20.6)	.232 (5.89)	.91 (23.11)
11	05	1.107 (28.1)	.432 (11.0)	.174 (4.4)	.66 (16.8)	.75 (19.1)	1.00 (24.5)	1.42 (36.1)	.81 (20.6)	.303 (7.70)	.97 (24.64)
13	07	1.174 (29.8)	.546 (13.9)	.195 (5.0)	.72 (18.3)	.81 (20.6)	1.13 (28.7)	1.48 (37.6)	.82 (20.8)	.370 (9.40)	1.02 (25.91)
15	09	1.241 (31.5)	.670 (17.0)	.315 (8.0)	.83 (21.1)	.88 (22.4)	1.31 (33.3)	1.55 (39.4)	.88 (22.4)	.492 (12.50)	1.08 (27.43)
17	05 and 11	1.305 (33.1)	.796 (20.2)	.385 (9.8)	.91 (23.1)	.94 (23.9)	1.38 (35.1)	1.61 (40.9)	.93 (23.6)	.590 (14.99)	1.16 (29.46)
19	07 and 13	1.371 (34.8)	.902 (22.9)	.445 (11.3)	.93 (23.6)	.97 (24.6)	1.44 (36.6)	1.64 (41.7)	.99 (25.1)	.673 (17.09)	1.25 (31.75)
21	09 and 15	1.438 (36.5)	1.027 (26.1)	.525 (13.3)	1.04 (26.4)	1.06 (26.9)	1.63 (41.4)	1.73 (43.9)	1.06 (26.9)	.776 (19.71)	1.34 (34.04)
23	11 and 16	1.505 (38.2)	1.152 (29.3)	.595 (15.1)	1.12 (28.4)	1.13 (28.7)	1.75 (44.5)	1.80 (45.7)	1.13 (28.7)	.873 (22.17)	1.43 (36.32)
25	07, 13 and 17	1.572 (39.9)	1.276 (32.4)	.655 (16.6)	1.18 (30.0)	1.19 (30.2)	1.88 (47.8)	1.86 (47.2)	1.05 (26.7)	.909 (23.09)	1.54 (39.12)
25[4]	--	1.850 (47.0)	1.460 (37.1)	.450 (11.4)	---	--	--	--	1.05 (26.7)	--	--

***For straight, 45° and 90° standard configuration**

Cable Entry Code[6]						
Entry Code	D ± .030	E Ref	F Ref	G Ref	H ±.060	J ±.090
04	.25 (6.4)	.187 (4.7)	.312 (7.9)	.512 (13.0)	.72 (18.3)	.87 (22.1)
05	.31 (7.9)	.187 (4.7)	.312 (7.9)	.512 (13.0)	.75 (19.1)	.93 (23.6)
07	.44 (11.2)	.187 (4.7)	.312 (7.9)	.512 (13.0)	.75 (19.1)	1.00 (25.4)
09	.56 (14.2)	.219 (5.6)	.375 (9.5)	.630 (16.0)	.76 (19.3)	1.03 (26.2)
11	.68 (17.3)	.219 (5.6)	.375 (9.5)	.630 (16.0)	.78 (19.8)	1.05 (26.7)
13	.81 (20.6)	.219 (5.6)	.375 (9.5)	.630 (16.0)	.79 (20.1)	1.06 (26.9)
15	.94 (23.9)	.219 (5.6)	.375 (9.5)	.630 (16.0)	.82 (20.8)	1.09 (27.7)
16	1.00 (25.4)	.219 (5.6)	.375 (9.5)	.630 (16.0)	.86 (21.8)	1.13 (28.7)
17	1.16 (29.5)	.250 (6.4)	.437 (11.1)	.630 (16.0)	.89 (22.6)	1.16 (29.5)

© 2022 Glenair, Inc • 1211 Air Way, Glendale, CA 91201 • 818-247-6000 • www.glenair.com • U.S. CAGE code 06324 • SuperNine® Catalog
Dimensions in Inches (millimeters) are subject to change without notice.

SuperNine® Backshells and accessories

MIL-DTL-38999 Series III Type

440-143 Composite Micro Banding Backshell with Qwik-Ty

COMPOSITE BACKSHELL WITH SELF-LOCKING COUPLING NUT, QWIK-TY, SHRINK BOOT GROOVE AND MICRO-BAND BANDING PORCH

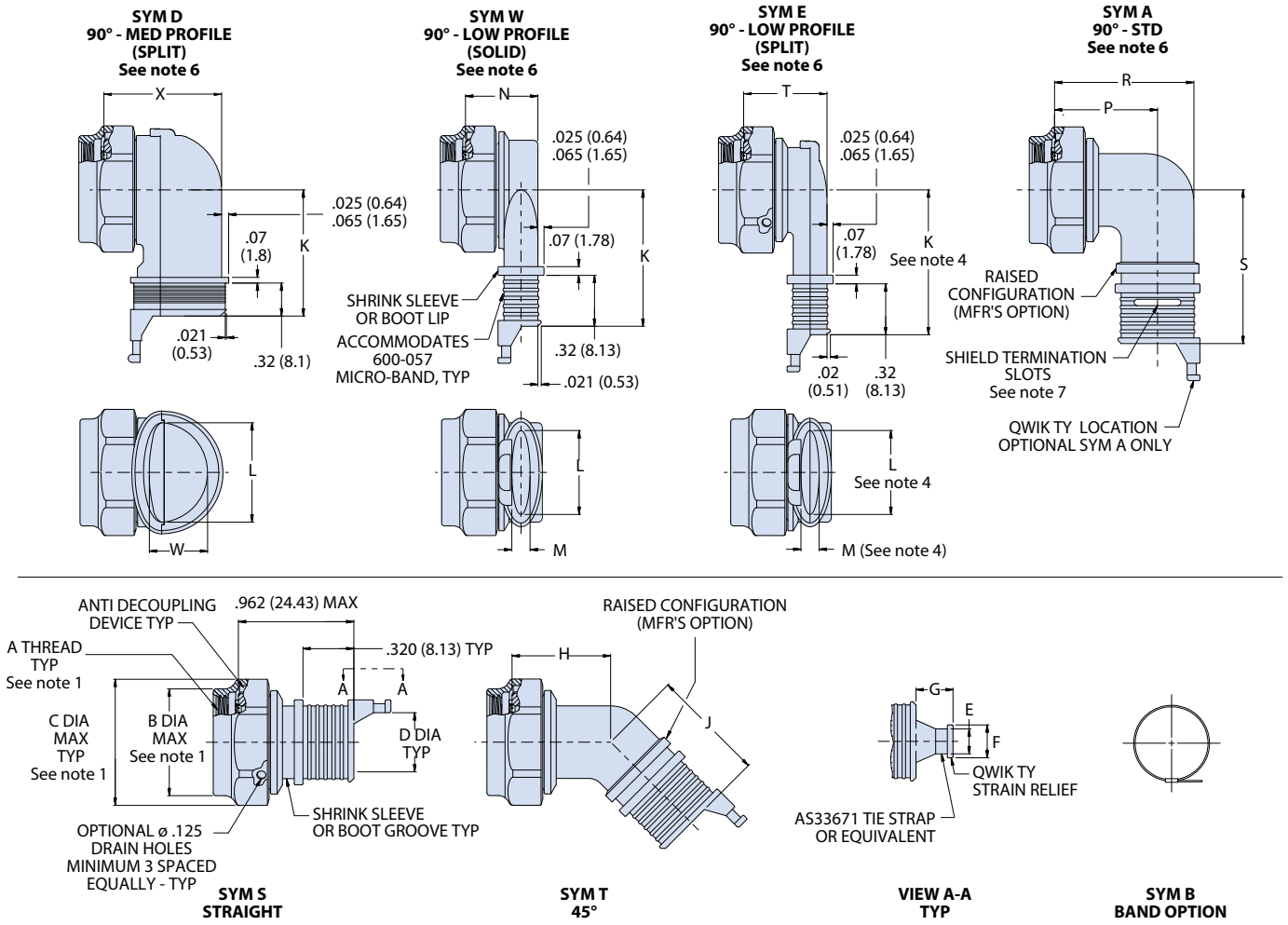

NOTES

1. See composite accessory interface data on page H-6
2. For effective grounding, conductive finish should be used
3. Glenair 600 series backshell assembly tools are recommended for assembly and installation
4. For SYM 'E', low profile split (SS 24/25) dimensions use indicated row in dimensions table.
5. For interface O-ring seal append mod code 101A
6. Entry code is not used for angular functions "D", 'W' and 'E'. Entry dimensions for these configurations are per shell size in dimensions table
7. Minimum of two shield termination slots will be supplied on backshell with exception of symbol 'E', which is supplied with one slot
8. Material/finish

- Adapter: high grade engineering thermoplastic/ see part number development, finish
- coupling nut and anti-decoupling device: high grade engineering thermoplastic/ supplied unplated



© 2022 Glenair, Inc • 1211 Air Way, Glendale, CA 91201 • 818-247-6000 • www.glenair.com • U.S. CAGE code 06324 • SuperNine® Catalog
Dimensions in Inches (millimeters) are subject to change without notice.

SuperNine® Backshells and accessories

MIL-DTL-38999 Series III Type

440-144 Composite Micro Banding Backshell

Part Number Development											
Sample Part Number	440	H	S	144	XM	15	09	D	B	T	S
Product Series	**440** = EMI/RFI non-environmental, composite self-locking, micro-band backshell										
Connector Designator	**H** = MIL-DTL-38999 Series III										
Angle and Profile	**S** = Straight **T** = 45° Elbow **W** = 90° Low Profile, Solid Profile **A** = 90° Standard **E** = 90° Low Profile, Split **D** = 90° Med Profile, Split										
Basic Number	**144**										
Finish	**XM** = Electroless Nickel **XW** = Cadmium O/D over Electroless Nickel **XMT** = Nickel-PTFE *1000 Hour Gray* **XMD** = Electroless Nickel - Enhanced All finishes are 2000 hour corrosion resistant										
Connector Shell Size	See dimensions table										
Cable Entry Code	See cable entry table; omit for low profile 90° symbols D, E and W only.										
Drain Hole Option	**D** = With Drain Hole; omit if not required										
Band Option	**B** = Supplied with Band, omit for none.										
Shrink Boot Option	**T** = Shrink Boot, omit for none.										
Shield Termination Slot	**S** = with Slot, omit for none.										

Dimensions

Shell Size	Entry Code*	G Max	H ± .03 (0.76)	J	K	L ±.09 (2.29)	M ±.09 (2.29)	N Max	P Max	W Dim	X Max	Sym W, E Shrink Boot Option
09	04	.63 (16.0)	1.042 (26.5)	.304 (7.7)	.160 (4.1)	.69 (17.5)	.88 (22.4)	1.36 (34.5)	.81 (20.6)	.232 (5.89)	.91 (23.11)	770-003S102
11	05	.66 (16.8)	1.107 (28.1)	.432 (11.0)	.174 (4.4)	.75 (19.1)	1.00 (24.5)	1.42 (36.1)	.81 (20.6)	.303 (7.70)	.97 (24.64)	770-003S103
13	07	.72 (18.3)	1.174 (29.8)	.546 (13.9)	.195 (5.0)	.81 (20.6)	1.13 (28.7)	1.48 (37.6)	.82 (20.8)	.370 (9.40)	1.02 (25.91)	770-003S103
15	09	.83 (21.1)	1.241 (31.5)	.670 (17.0)	.315 (8.0)	.88 (22.4)	1.31 (33.3)	1.55 (39.4)	.88 (22.4)	.492 (12.50)	1.08 (27.43)	770-003S103
17	05 & 11	.91 (23.1)	1.305 (33.1)	.796 (20.2)	.385 (9.8)	.94 (23.9)	1.38 (35.1)	1.61 (40.9)	.93 (23.6)	.590 (14.99)	1.16 (29.46)	770-003S104
19	07 & 13	.93 (23.6)	1.371 (34.8)	.902 (22.9)	.445 (11.3)	.97 (24.6)	1.44 (36.6)	1.64 (41.7)	.99 (25.1)	.673 (17.09)	1.25 (31.75)	770-003S105
21	09 & 15	1.04 (26.4)	1.438 (36.5)	1.027 (26.1)	.525 (13.3)	1.06 (26.9)	1.63 (41.4)	1.73 (43.9)	1.06 (26.9)	.776 (19.71)	1.34 (34.04)	770-003S105
23	11 & 16	1.12 (28.4)	1.505 (38.2)	1.152 (29.3)	.595 (15.1)	1.13 (28.7)	1.75 (44.5)	1.80 (45.7)	1.13 (28.7)	.873 (22.17)	1.43 (36.32)	770-003S106
25	07, 13 & 17	1.18 (30.0)	1.572 (39.9)	1.276 (32.4)	.655 (16.6)	1.19 (30.2)	1.88 (47.8)	1.86 (47.2)	1.05 (26.7)	.909 (23.09)	1.54 (39.12)	770-003S106
25	--	--	1.850 (47.0)	1.460 (37.1)	.450 (11.4)	--	--	--	1.05 (26.7)	.909 (23.09)	1.54 (39.12)	770-003S106

*Available for Straight, 45° and 90° Standard Configuration

Cable Entry

Entry Code	D ± .030 (0.76)	H ± .060 (1.52)	J ± .090 (2.29)	Sym S, T, A Shrink Boot (Option T)
04	.25 (6.4)	.72 (18.3)	.87 (22.1)	770-003S102
05	.31 (7.9)	.75 (19.1)	.93 (23.6)	770-003S102
07	.44 (11.2)	.75 (19.1)	1.00 (25.4)	770-003S103
09	.56 (14.2)	.76 (19.3)	1.03 (26.2)	770-003S103
11	.68 (17.3)	.78 (19.8)	1.05 (26.7)	770-003S104
13	.81 (20.6)	.79 (20.1)	1.06 (26.9)	770-003S105
15	.94 (23.9)	.82 (20.8)	1.09 (27.7)	770-003S106
16	1.00 (25.4)	.86 (21.8)	1.13 (28.7)	770-003S106
17	1.16 (29.5)	.89 (22.6)	1.16 (29.5)	770-003S107

NOTES

1. See composite accessory interface data on page H-6
2. Assembly identified with manufactures's name and P/N space permitting
3. for effective grounding, connector with conductive finish should be used
4. Glenair 600 series backshell assembly tools are recommended for assembly and installation
5. For Sym 'E' and 'D' low profile split (SS24/25) dimensions used indicated row in dimensions table
6. For interface O-ring seal, contact engineering

© 2022 Glenair, Inc • 1211 Air Way, Glendale, CA 91201 • 818-247-6000 • www.glenair.com • U.S. CAGE code 06324 • SuperNine® Catalog
Dimensions in Inches (millimeters) are subject to change without notice.

SuperNine® Backshells and accessories

MIL-DTL-38999 Series III Type

440-144 Composite Micro Banding Backshell

COMPOSITE BACKSHELL WITH SELF-LOCKING COUPLING NUT, SHRINK BOOT GROOVE AND MICRO-BAND BANDING PORCH

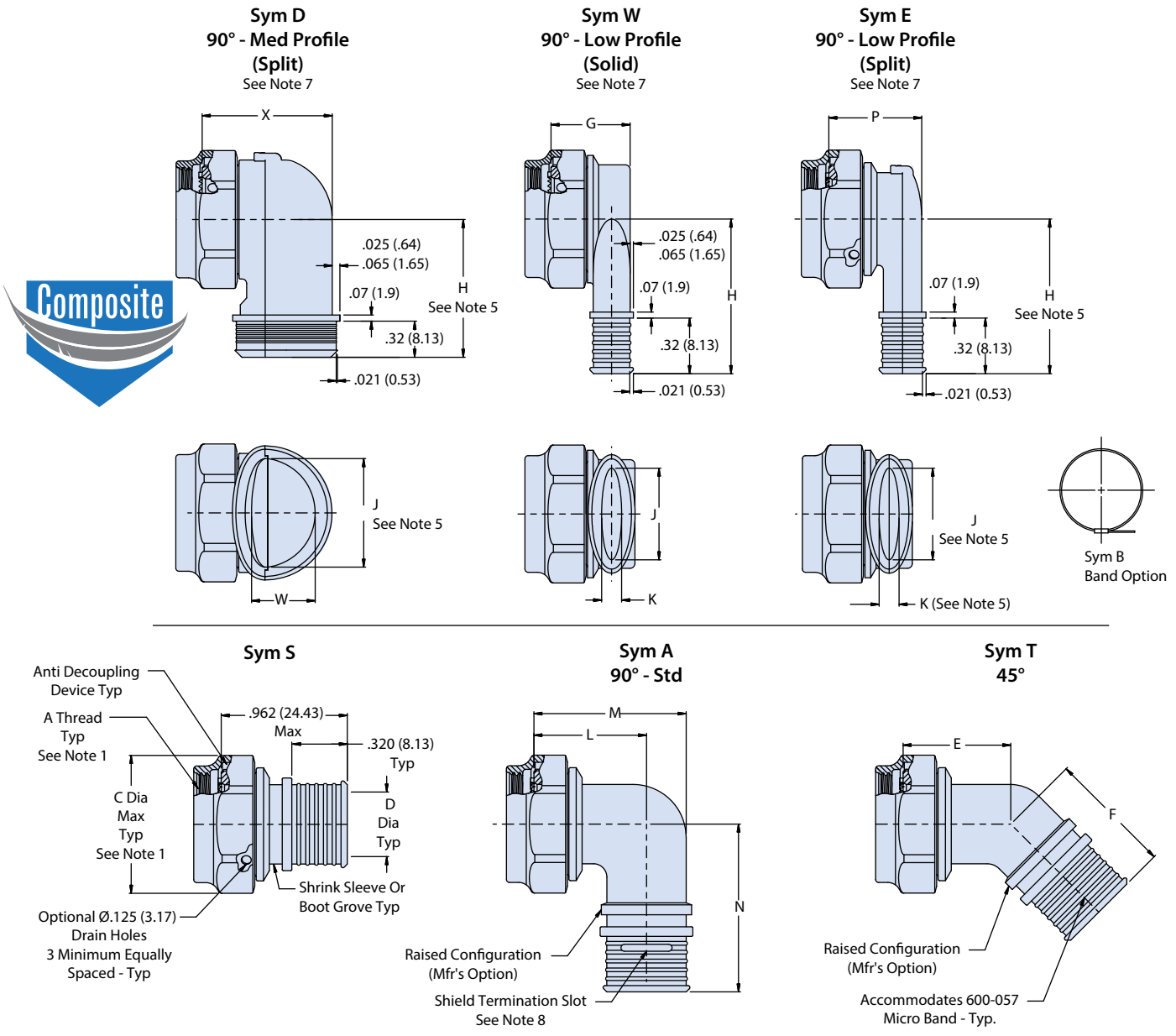

NOTES (CONT.)

7. Entry code is not used for angular functions 'W', 'E', and 'D'. Entry dimensions for these configurations are per shell size in dimensions table
8. A minimum of two shield terminations slots will be supplied on backshell with exception to symbol, 'E', which are supplied with one slot
9. Material/finish
   - Adapter: high grade engineering thermoplastic/see P/N development, finish
   - coupling nut and anti-decoupling device: high grade engineering thermoplastic/supplied unplated, black

© 2022 Glenair, Inc • 1211 Air Way, Glendale, CA 91201 • 818-247-6000 • www.glenair.com • U.S. CAGE code 06324 • SuperNine® Catalog
Dimensions in Inches (millimeters) are subject to change without notice.

SuperNine® Backshells and accessories

MIL-DTL-38999 Series III Type

470-017 Composite EMI/RFI zero length shield termination adapter

Part Number Development										
Sample Part Number	470	H	S	017	XM	17	6	G	DS	-T

Product Series	StarShield™ zero-termination-length backshell
Connector Designator	**H** = MIL-DTL-38999 Series III
Angle	**S** = Straight **T** = 45° **W** = 90°
Basic Number	**017** = StarShield composite backshell
Finish	**XMT** = 2000 hr, nickel-PTFE, 1000 hour gray **XW** = 2000 hr, cadmium O/D over electroless nickel **XB** = No plating, black **XM** = CRES, electroless nickel **XD** = No plating, desert tan **Enhanced performance finishes** **XSM** = Electroless nickel **XSW** = Enhanced cadmium, olive drab
Order Number	See Dimensions Table
Ferrule Quantity Code	See Dimensions Table
Rear End Option	**G** = Gland Nut **M** = Micro Band Nut with Band **N** = Micro Band Nut without Band
Drilled Star	**DS** = Drilled Star, omit if not required.
Shrink Boot	**T** = Shrink Boot, omit for none; See Shrink Boot Table



Shrink Boot	
Shell Size	Shrink Boot Ref. Part No.
09	770-001S1 04
11	770-001S1 06
13	770-001S1 06
15	770-001S1 07
17	770-001S1 07
19	770-001S1 08
21	770-001S1 08
23	770-001S1 08
25	770-001S1 09

Dimensions											
Order Number	Shell Size Code	Shell Size Reference	A Thread ISO Metric	B Dia Max	C Dia Max	D Max	E Max	F Max	G Max	Ferrule Quantity[4] Std.	Ferrule Quantity[4] Opt.
09	A	9	M12 X 1 - 6H	.83 (21.1)	.681 (17.30)	.49 (12.45)	1.00 (25.4)	.71 (18.03)	1.14 (28.96)	1	-
11	B	11	M15 X 1 - 6H	.96 (24.4)	.885 (22.48)	.51 (12.95)	1.02 (25.91)	.77 (19.56)	1.20 (30.48)	2	-
13	C	13	M18 X 1 - 6H	1.09 (27.7)	.917 (23.29)	.55 (13.97)	1.04 (26.42)	.83 (21.08)	1.26 (32.00)	3	-
15	D	15	M22 X 1 - 6H	1.22 (31.0)	1.055 (26.80)	.57 (14.48)	1.08 (27.43)	.89 (22.61)	1.32 (33.53)	5	-
17	E	17	M25 X 1 - 6H	1.35 (34.3)	1.173 (29.79)	.59 (14.99)	1.10 (27.94)	.95 (24.13)	1.38 (35.05)	6	7
19	F	19	M28 X 1 - 6H	1.48 (37.6)	1.291 (32.79)	.61 (15.49)	1.12 (28.45)	1.01 (25.65)	1.44 (36.58)	7	-
21	G	21	M31 X 1 - 6H	1.62 (41.1)	1.409 (37.79)	.65 (16.51)	1.14 (28.96)	1.08 (27.43)	1.52 (36.61)	9	11
23	H	23	M34 X 1 - 6H	1.76 (44.70)	1.527 (38.79)	.67 (17.02)	1.18 (29.97)	1.14 (28.96)	1.57 (39.88)	10	13
25	J	25	M37 X 1 - 6H	1.86 (47.24)	1.665 (42.29)	.71 (18.03)	1.22 (30.99)	1.20 (30.48)	1.63 (41.40)	12	17

© 2022 Glenair, Inc • 1211 Air Way, Glendale, CA 91201 • 818-247-6000 • www.glenair.com • U.S. CAGE code 06324 • SuperNine® Catalog
Dimensions in Inches (millimeters) are subject to change without notice.

SuperNine® Backshells and accessories

MIL-DTL-38999 Series III Type

470-017 Composite EMI/RFI zero length shield termination adapter

COMPOSITE STARSHIELD® BACKSHELL WITH SELF-LOCKING COUPLING NUT AND SHRINK BOOT GROOVE

SYMBOL S
Straight

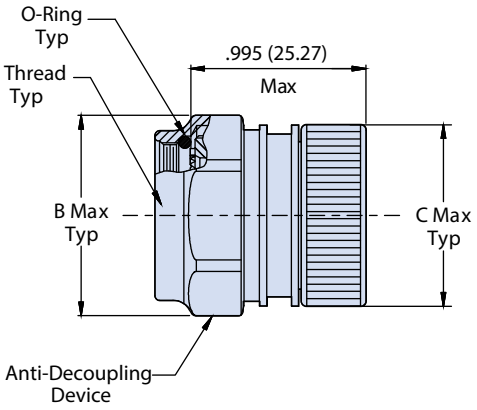

Exploded view of components

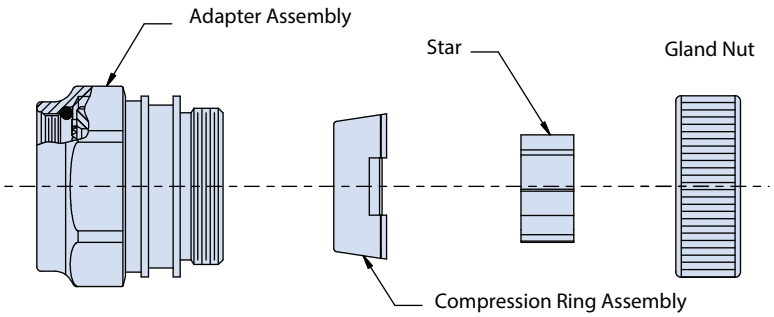

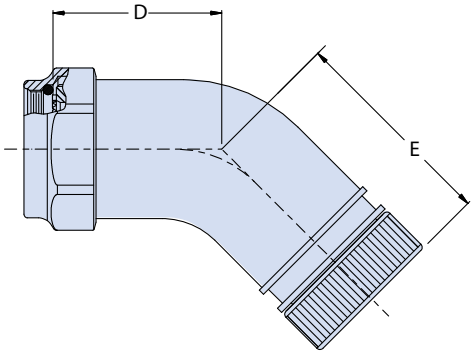

SYMBOL T
45°

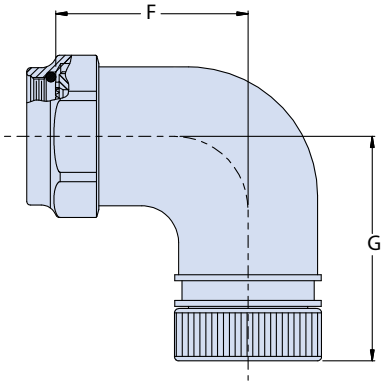

SYMBOL W
90°

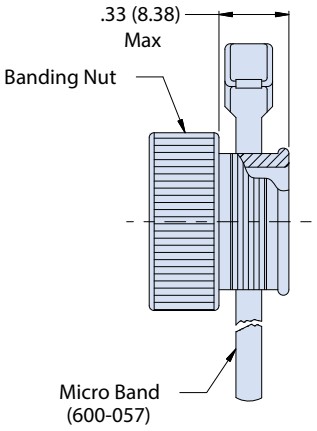

SYM M	SYM N
Micro Band Nut with Band	Micro Band Nut without Band

NOTES

1. Glenair 600 series backshell assembly tools are recommended for assembly and installation.
2. Ferrule kit sold separately.
   687-764 ferrule and HST device kit
   687-809 ferrule and sealing device kit
   687-748 solder ferrule
   687-841-01 HST flex device
3. Star not supplied with order number 09. Drilled star is available on order numbers 15-25 only. If optional ferrule qty per Table 1 is selected, one split and one solid star will be supplied
4. Material/finish

- Adapter, compression ring and star: high grade engineering thermoplastic/ see part number development, finish
- Nuts: high grade engineering thermoplastic/color black
- O-ring: silicone/N.A.
- Compression ring retainer: stainless steel/passivate

© 2022 Glenair, Inc • 1211 Air Way, Glendale, CA 91201 • 818-247-6000 • www.glenair.com • U.S. CAGE code 06324 • SuperNine® Catalog
Dimensions in Inches (millimeters) are subject to change without notice.

SuperNine® Backshells and accessories

MIL-DTL-38999 Series III Type

320H*030 Environmental Extended Adapter for Size #8 Contacts



Self-locking, Straight, 45°, or 90°. Threaded coupling adapterv with long radius angular function. Anti-decoupling ratchet prevents loosening under vibration. Accommodates Series 23 SuperNine connectors with size #8 contacts. Straight, 45° or 90° cable exit. Aluminum or stainless steel.

Features

- Expanded clearance for El Ochito Contacts
- EMI/RFI
- Self-locking spin coupling

Specifications

- Operating temperature:
  codes ME, MT and Z1:-65°C to +200°C
  codes ZR, NF, TZ:-65°C to +175°C
- Shell conductivity:
  aluminum versions: 2.5 milliohms max.
  Stainless steel: 5 milliohms max.
- Salt spray (corrosion)
  Code ME: 96 hours
  Code NF, ZR, MT, Z1, TZ: 1000 hours
- Vibration: SAE AS85049 Category 3B
- Shock: SAE AS85049 Category 3B

Construction

- Coupling nut, adapter: aluminum alloy or 300 series stainless steel. See material/ finish options in How to Order table.
- O-ring: silicone
- Anti-decoupling device: corrosion-resistant material

How To Order				
Sample Part Number	**320HS030**	**ME**	**16**	**-4**
Product	**320HS030** = Straight Backshell **320HM030** = 45° Backshell **320HN030** = 90° Backshell			
Material/ Finish	**ME** = Aluminum, Electroless Nickel, **MT** = Aluminum, Ni/PTFE **NF** = Aluminum, Olive Drab Cadmium **TZ** = Aluminum, Tin-Zinc **ZR** = Aluminum, Black Zinc-Nickel **Z1** = Stainless Steel, Passivated			
Shell Size	**08 09 10 11 12 14 16 18 20 22 24**			
Backshell Length	*length given in .25 inch increments (eg. 1.0=2 inches).* *Applies to straight backshell only*			

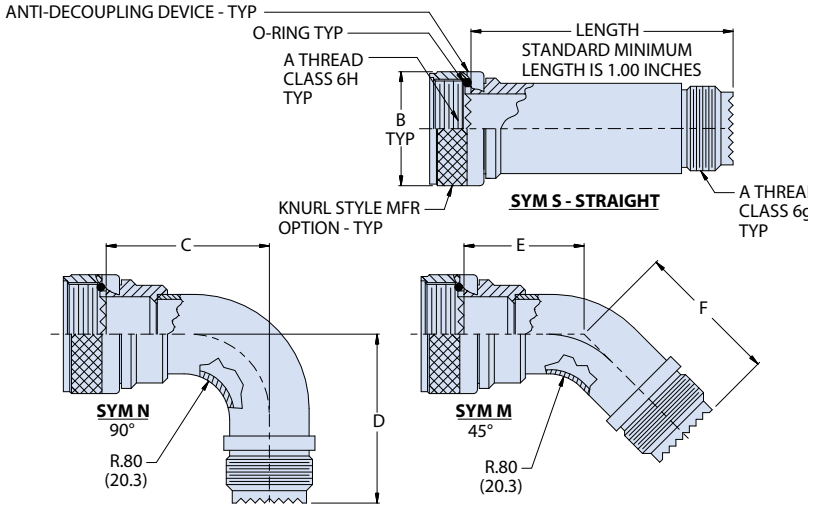

Dimensions							
Shell Size	A Thread Iso Metric	B Max	C Max	D Max	E Max	F Max	G Max
08	M10 X 1	0.692 (17.58)	1.853 (47.07)	1.457 (37.01)	1.393 (35.38)	0.997 (25.32)	0.723 (18.36)
09	M12 X 1	0.786 (19.96)	1.853 (47.07)	1.457 (37.01)	1.393 (35.38)	0.997 (25.32)	0.723 (18.36)
10	M14 X 1	0.883 (22.43)	1.915 (48.64)	1.519 (38.58)	1.420 (36.07)	1.024 (26.01)	0.742 (18.85)
11	M15 X 1	0.911 (23.14)	1.915 (48.64)	1.519 (38.58)	1.420 (36.07)	1.024 (26.01)	0.742 (18.85)
12	M17 X 1	1.002 (25.45)	2.067 (52.50)	1.671 (42.44)	1.445 (36.70)	1.049 (26.64)	0.760 (19.30)
14	M19 X 1	1.066 (27.08)	2.067 (52.50)	1.671 (42.44)	1.445 (36.70)	1.049 (26.64)	0.760 (19.30)
16	M22 X 1	1.196 (30.38)	2.130 (54.10)	1.734 (44.04)	1.501 (38.13)	1.105 (28.07)	0.799 (20.29)
18	M25 X 1	1.311 (33.30)	2.235 (56.77)	1.839 (46.71)	1.540 (39.12)	1.144 (29.06)	0.827 (21.01)
20	M28 X 1	1.430 (36.32)	2.298 (58.37)	1.902 (48.31)	1.566 (39.78)	1.170 (29.72)	0.845 (21.46)
22	M31 X 1	1.548 (39.32)	2.359 (59.92)	1.963 (49.86)	1.548 (39.32)	1.152 (29.26)	0.833 (21.16)
24	M34 X 1	1.696 (43.08)	2.380 (60.45)	1.984 (50.39)	1.570 (39.88)	1.174 (29.82)	0.848 (21.54)

© 2022 Glenair, Inc • 1211 Air Way, Glendale, CA 91201 • 818-247-6000 • www.glenair.com • U.S. CAGE code 06324 • SuperNine® Catalog
Dimensions in Inches (millimeters) are subject to change without notice.

SuperNine® Backshells and accessories

MIL-DTL-38999 Series III Type

440H*233 Metal EMI/RFI, Shield Termination Backshell



Features

- Expanded clearance for El Ochito Contacts
- Self-locking spin coupling

Specifications

- Operating temperature:
  codes ME, MT and Z1:-65°C to +200°C
  codes ZR, NF, TZ:-65°C to +175°C
- Shell conductivity:
  aluminum versions: 2.5 milliohms max.
  Stainless steel: 5 milliohms max.
- Salt spray (corrosion)
  Code ME: 96 hours
  Code NF, ZR, MT, Z1, TZ: 1000 hours
- Vibration: SAE AS85049 Category 3B
- Shock: SAE AS85049 Category 3B

Construction

- Adapter, elbow, coupling nut, ferrule, clamp: see material/finish options in How to Order table.
- Anti-decoupling device: corrosion-resistant material or high grade engineering thermoplastic
- O-rings: silicone/N.A.
- Band/hardware: CRES/passivate

Application Notes

- Standard minimum length is 1.50 inches, applies to Symbol S, Straight only
- For effective grounding, connector with conductive finish should be used.

EMI/RFI, extended radius angular function strain relief cable clamp backshell with integral banding platform. Threaded coupling backshell with anti-decoupling ratchet prevents loosening under vibration. Accommodates Series 23 SuperNine connectors with size #8 contacts and cable sealing boots. Aluminum or stainless steel.

How To Order

Sample Part Number	440HS233	ME	10	08	M	-8	K	P	T
Product	**440HS233** = Straight Backshell **440HN233** = 90° Angle Backshell **440HM233** = 45° Angle Backshell								
Material/ Finish	**ME** = Aluminum, Electroless Nickel **MT** = Aluminum, Ni/PTFE **NF** = Aluminum, Olive Drab Cadmium **TZ** = Tin-Zinc **ZR** = Aluminum, Black Zinc-Nickel **Z1** = Stainless Steel, Passivated								
Shell Size	**08 09 10 11 12 14 16 18 20 22 24**								
Dash No	See Dash Number Table								
Band Platform Option	**M** = Micro Band Platform (omit for standard platform)								
Length	Designate in .25 inch increments (eg. -8 = 2.0 inches) *Applies to straight backshell only*								
Band Option	**K** = Precoiled Band (omit if not required)								
Plating Shield	**P** = Polysulfide (omit if not required); when polysulfide barrier is selected for plating, shield termination surface shall be electroless nickel plated only. Applies to "NF", "TZ", and "ZR"								
Shrink Boot	**T** = Standard Shrink Boot (* = 1) **T1** = Standard with Pre-Coated W1 Hot Melt Adhesive (* = 1) **H** = Zero Halogen Shrink Boot (* = 2) **H1** = Zero Halogen with pre-coated W1 Hot Melt Adhesive (* = 2) See Dash Number Table for complete shrink boot part number to order separately (Omit for none)								

Dash Number

Dash No	K Dia	L Dia	M Dia	Shrink Boot T Or H Ref	Shrink Boot With Adhesive
02	0.125 (3.18)	0.250 (6.35)	0.312 (7.92)	770-003S*11	770-003S*11W1
03	0.188 (4.78)	0.312 (7.92)	0.374 (9.50)	770-003S*11	770-003S*11W1
04	0.250 (6.35)	0.375 (9.52)	0.437 (11.10)	770-003S*12	770-003S*12W1
05	0.312 (7.92)	0.438 (11.13)	0.500 (12.70)	770-003S*12	770-003S*12W1
06	0.375 (9.52)	0.500 (12.70)	0.562 (14.27)	770-001S*03	770-001S*03W1
07	0.438 (11.13)	0.562 (14.27)	0.624 (15.85)	770-001S*04	770-001S*04W1
08	0.500 (12.70)	0.625 (15.88)	0.687 (17.45)	770-001S*04	770-001S*04W1
09	0.562 (14.27)	0.688 (17.48)	0.750 (19.05)	770-001S*04	770-001S*04W1
10	0.625 (15.88)	0.750 (19.05)	0.812 (20.62)	770-001S*04	770-001S*04W1
11	0.688 (17.48)	0.812 (20.62)	0.874 (22.20)	770-001S*04	770-001S*04W1
12	0.750 (19.05)	0.875 (22.23)	0.937 (23.80)	770-001S*05	770-001S*05W1
13	0.812 (20.62)	0.938 (23.83)	1.000 (25.40)	770-001S*05	770-001S*05W1
14	0.875 (22.23)	1.000 (25.40)	1.062 (26.97)	770-001S*05	770-001S*05W1
15	0.938 (23.83)	1.062 (26.97)	1.124 (28.55)	770-001S*05	770-001S*05W1
16	1.000 (25.40)	1.125 (28.58)	1.187 (30.15)	770-001S*06	770-001S*06W1
17	1.062 (26.97)	1.188 (30.18)	1.250 (31.75)	770-001S*06	770-001S*06W1
18	1.125 (28.58)	1.250 (31.75)	1.312 (33.32)	770-001S*07	770-001S*07W1

© 2022 Glenair, Inc • 1211 Air Way, Glendale, CA 91201 • 818-247-6000 • www.glenair.com • U.S. CAGE code 06324 • SuperNine® Catalog
Dimensions in Inches (millimeters) are subject to change without notice.

SuperNine® Backshells and accessories

MIL-DTL-38999 Series III Type

440H*233 Metal EMI/RFI, Shield Termination Backshell

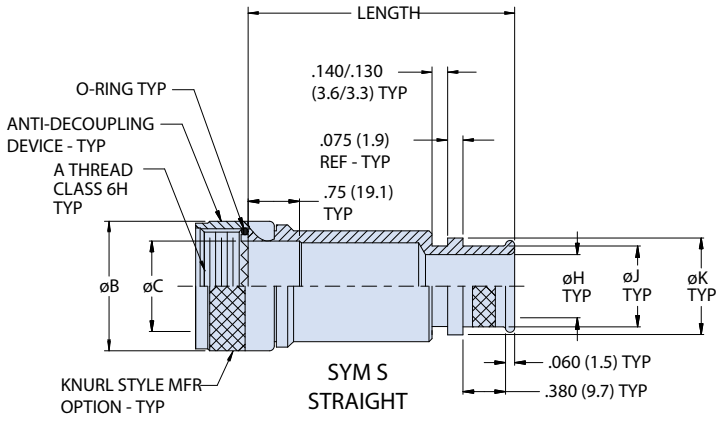

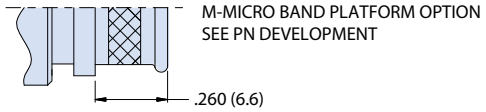

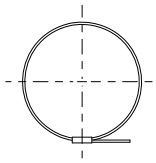

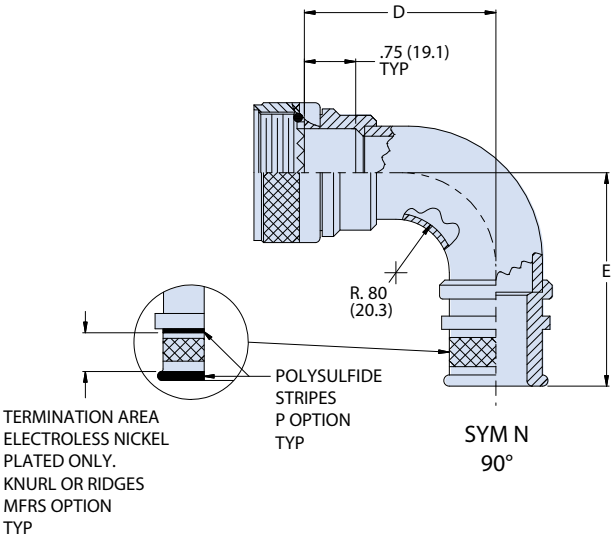

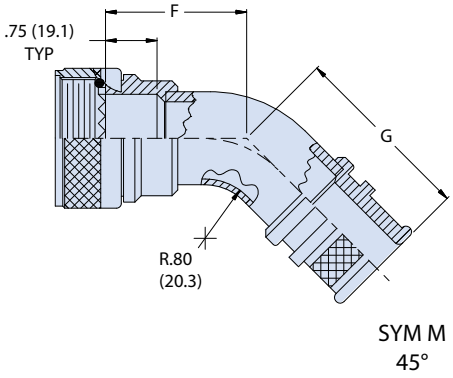

Dimensions								
Shell Size	A Thread ISO Metric	ØC Max	K Max	L Max	M Max	N Max	Max Cable Entry	Max Entry
08	M10 X 1-6H	.692 (17.58)	.790 (20.07)	1.190 (30.23)	.940 (23.88)	1.350 (34.29)	.250 (6.35)	04
09	M12 X 1-6H	.786 (19.96)	.790 (20.07)	1.190 (30.23)	.940 (23.88)	1.350 (34.29)	.250 (6.35)	04
10	M14 X 1-6H	.883 (22.43)	.790 (20.07)	1.260 (32.00)	.970 (24.64)	1.450 (36.83)	.375 (9.52)	06
11	M15 X 1-6H	.911 (23.14)	.790 (20.07)	1.260 (32.00)	.970 (24.64)	1.450 (36.83)	.375 (9.52)	06
12	M17 X 1-6H	1.002 (25.45)	.830 (21.08)	1.340 (34.04)	1.040 (26.42)	1.550 (39.37)	.500 (12.70)	08
14	M19 X 1-6H	1.066 (27.08)	.830 (21.08)	1.340 (34.04)	1.040 (26.42)	1.550 (39.37)	.500 (12.70)	08
16	M22 X 1-6H	1.196 (30.38)	.840 (21.34)	1.410 (35.81)	1.080 (27.43)	1.650 (41.91)	.625 (15.88)	10
18	M25 X 1-6H	1.311 (33.30)	.890 (22.61)	1.490 (37.85)	1.40 (35.56)	1.740 (44.20)	.750 (19.05)	12
20	M28 X 1-6H	1.430 (36.32)	.920 (23.37)	1.560 (39.62)	1.210 (30.73)	1.840 (46.74)	.875 (22.23)	14
22	M31 X 1-6H	1.548 (39.32)	.950 (24.13)	1.620 (41.15)	1.280 (32.51)	1.940 (49.28)	1.000 (25.40)	16
24	M34 X 1-6H	1.696 (43.08)	.970 (24.64)	1.680 (42.67)	1.330 (33.78)	2.040 (51.82)	1.125 (28.58)	18

© 2022 Glenair, Inc • 1211 Air Way, Glendale, CA 91201 • 818-247-6000 • www.glenair.com • U.S. CAGE code 06324 • SuperNine® Catalog
Dimensions in Inches (millimeters) are subject to change without notice.

SuperNine® Backshells and accessories

MIL-DTL-38999 Series III Type

620HS090 Strain Relief Cable Clamp Backshell, Size #8 Contacts



Extended shell strain relief cable clamp backshell. Self-locking. Threaded coupling adapter with anti-decoupling ratchet prevents loosening under vibration. Accommodates Series 806 connectors with size #8 contacts and cable sealing boots. Aluminum or stainless steel.

Features

- Expanded clearance for El Ochito Contacts
- Self-locking spin coupling

Specifications

- Operating temperature:
  codes ME, MT and Z1:-65°C to +200°C
  codes ZR, NF, TZ:-65°C to +175°C
- Shell conductivity:
  aluminum versions: 2.5 milliohms max.
  Stainless steel: 5 milliohms max.
- Salt spray (corrosion)
  Code ME: 96 hours
  Code NF, ZR, MT, Z1, TZ: 1000 hours
- Vibration: SAE AS85049 Category 3B
- Shock: SAE AS85049 Category 3B

Construction

- Coupling nut, saddles, clamp body: aluminum alloy or 300 series stainless steel. See material/finish options in How to Order table.
- Hardware: CRES/passivate or Cad/O.D. over nickel
- Anti-decoupling device: corrosion-resistant material

How To Order			
Sample Part Number	**620HS090**	**ME**	**16**
Product	**620HS090** = Series 23, SuperNine Straight Backshell		
Material/ Finish	**ME** = Aluminum, Electroless Nickel **MT** = Aluminum, Ni/PTFE **NF** = Aluminum, Olive Drab Cadmium **ZR** = Aluminum, Black Zinc-Nickel **Z1** = Stainless Steel, Passivated		
Shell Size	**08 09 10 11 12 14 16 18 20 22 24**		

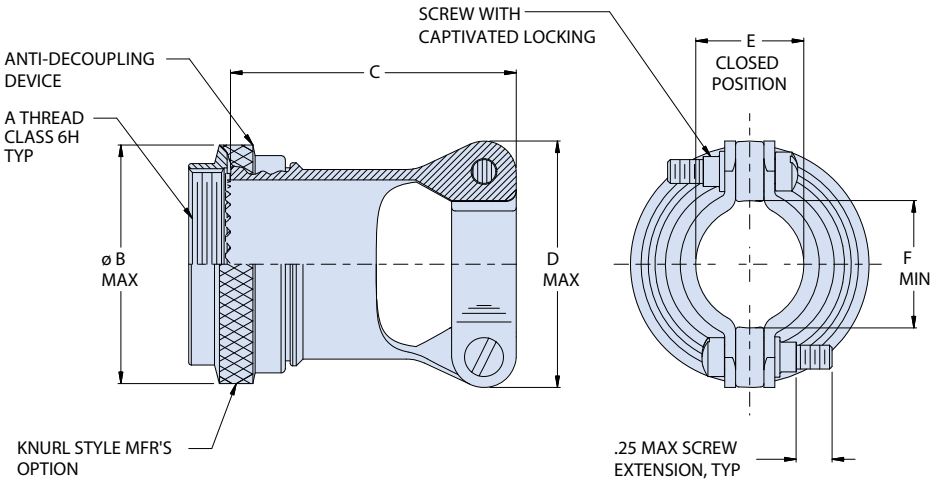

Dimensions						
Shell Size	A Thread ISO Metric	B Dia Max	C	D Max	E ±0.031 (0.79)	F Min
08	M10 x 1	0.642 (16.31)	1.23 (31.24)	0.93 (23.62)	0.205 (5.21)	0.18 (4.57)
09	M12 x 1	0.735 (18.67)	1.28 (32.51)	0.98 (24.89)	0.219 (5.56)	0.22 (5.59)
10	M14 x 1	0.786 (19.96)	1.28 (32.51)	1.02 (25.91)	0.244 (6.20)	0.25 (6.35)
11	M15 x 1	0.830 (21.08)	1.35 (34.29)	1.05 (26.67)	0.264 (6.71)	0.27 (6.86)
12	M17 x 1	0.911 (23.14)	1.35 (34.29)	1.12 (28.45)	0.312 (7.92)	0.32 (8.13)
14	M19 x 1	1.002 (25.45)	1.41 (35.81)	1.20 (30.48)	0.344 (8.74)	0.35 (8.89)
16	M22 x 1	1.149 (29.18)	1.47 (37.34)	1.30 (33.02)	0.460 (11.68)	0.47 (11.94)
18	M25 x 1	1.264 (32.11)	1.53 (38.86)	1.44 (36.58)	0.545 (13.84)	0.55 (13.97)
20	M28 x 1	1.394 (35.41)	1.66 (42.16)	1.56 (39.62)	0.615 (15.62)	0.62 (15.75)
22	M31 x 1	1.513 (38.43)	1.72 (43.69)	1.69 (42.93)	0.698 (17.73)	0.70 (17.78)
24	M34 x 1	1.631 (41.43)	1.78 (45.21)	1.77 (44.96)	0.780 (19.81)	0.78 (19.81)

© 2022 Glenair, Inc • 1211 Air Way, Glendale, CA 91201 • 818-247-6000 • www.glenair.com • U.S. CAGE code 06324 • SuperNine® Catalog
Dimensions in Inches (millimeters) are subject to change without notice.

SuperNine® Backshells and accessories

MIL-DTL-38999 Series III Type

440HS232 EMI/RFI Strain Relief Cable Clamp, Size #8 Contacts



Strain relief cable clamp adapter. Self-locking. Threaded coupling adapter with anti-decoupling ratchet prevents loosening under vibration. Accommodates Series 23 SuperNine connectors with size #8 contacts and cable sealing boots. Aluminum or stainless steel.

Features

- Expanded clearance for El Ochito contacts
- EMI/RFI
- Band strap shield termination
- Shield termination slot option
- Self-locking spin coupling

Specifications

- Operating temperature:
  codes ME, MT and Z1:-65°C to +200°C
  codes ZR, NF, TZ:-65°C to +175°C
- Shell conductivity:
  aluminum versions: 2.5 milliohms max.
  Stainless steel: 5 milliohms max.
- Salt spray (corrosion)
  Code ME: 96 hours
  Code NF, ZR, MT, Z1, TZ: 1000 hours
- Vibration: SAE AS85049 Category 3B
- Shock: SAE AS85049 Category 3B

Construction

- Coupling nut, saddles, clamp body: aluminum alloy or 300 series stainless steel. See material/finish options in How to Order table.
- Hardware: CRES/passivate or Cad/O.D. over nickel
- Anti-decoupling device: corrosion-resistant material

How To Order

Sample Part Number	440HS232	NF	16	S	K
Product	**440HS232** = Series 23, SuperNine Straight Backshell				
Material/ Finish	**ME** = Aluminum, Electroless Nickel **MT** = Aluminum, Ni/PTFE **NF** = Aluminum, Olive Drab Cadmium **ZR** = Aluminum, Black Zinc-Nickel **Z1** = Stainless Steel, Passivated				
Shell Size	**08 09 10 11 12 14 16 18 20 22 24**				
Shield Termination Slot	**S** = Shield Termination Slot				
Precoiled Band	**K** = Percoiled Band (Omit for None)				

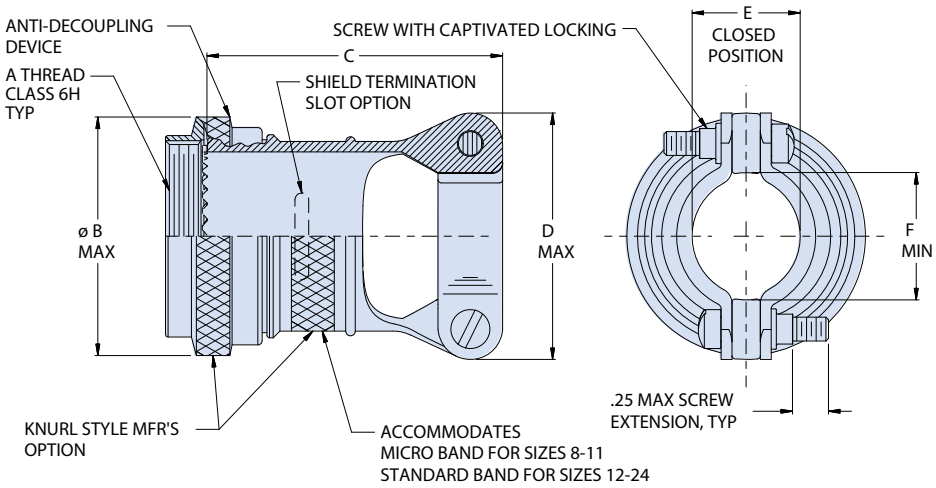

Dimensions						
Shell Size	A Thread ISO Metric	B Dia Max	C	D Max	E +0.031 (0.79)	F Min
08	M10 x 1	0.642 (16.31)	1.23 (31.24)	0.93 (23.62)	0.205 (5.21)	0.18 (4.57)
09	M12 x 1	0.735 (18.67)	1.28 (32.51)	0.98 (24.89)	0.219 (5.56)	0.22 (5.59)
10	M14 x 1	0.786 (19.96)	1.28 (32.51)	1.02 (25.91)	0.244 (6.20)	0.25 (6.35)
11	M15 x 1	0.830 (21.08)	1.35 (34.29)	1.05 (26.67)	0.264 (6.71)	0.27 (6.86)
12	M17 x 1	0.911 (23.14)	1.35 (34.29)	1.12 (28.45)	0.312 (7.92)	0.32 (8.13)
14	M19 x 1	1.002 (25.45)	1.41 (35.81)	1.20 (30.48)	0.344 (8.74)	0.35 (8.89)
16	M22 x 1	1.149 (29.18)	1.47 (37.34)	1.30 (33.02)	0.460 (11.68)	0.47 (11.94)
18	M25 x 1	1.264 (32.11)	1.53 (38.86)	1.44 (36.58)	0.545 (13.84)	0.55 (13.97)
20	M28 x 1	1.394 (35.41)	1.66 (42.16)	1.56 (39.62)	0.615 (15.62)	0.62 (15.75)
22	M31 x 1	1.513 (38.43)	1.72 (43.69)	1.69 (42.93)	0.698 (17.73)	0.70 (17.78)
24	M34 x 1	1.631 (41.43)	1.78 (45.21)	1.77 (44.96)	0.780 (19.81)	0.78 (19.81)

© 2022 Glenair, Inc • 1211 Air Way, Glendale, CA 91201 • 818-247-6000 • www.glenair.com • U.S. CAGE code 06324 • SuperNine® Catalog
Dimensions in Inches (millimeters) are subject to change without notice.

SuperNine® Backshells and accessories

MIL-DTL-38999 Series III Type

443H*042 EMI/RFI Environmental, Cable Clamp for Size #8 Contacts



EMI/RFI environmental, extended front end long radius angular function strain relief with cable clamp backshell with band in a can banding. Threaded coupling backshell with anti-decoupling ratchet prevents loosening under vibration. Accommodates Series 23 SuperNine® connectors with size #8 contacts and cable sealing boots. Aluminum or stainless steel.

Features

- Expanded clearance for El Ochito Contacts
- Self-locking spin coupling

Specifications

- Operating temperature:
  codes ME, and Z1: -65°C to +200°C
  codes ZR, MT, NF, TZ: -65°C to +175°C
- Shell conductivity:
  aluminum versions: 2.5 milliohms max.
  Stainless steel: 5 milliohms max.
- Salt spray (corrosion)
  Code ME: 96 hours
  Code ZR : 500 hours
  Code NF, MT, Z1, TZ: 1000 hours
- Vibration: SAE AS85049 Category 3B
- Shock: SAE AS85049 Category 3B

Construction

- Adapter, elbow, coupling nut, ferrule, clamp: see material/finish options in How to Order table.
- Anti-decoupling device: corrosion-resistant material or high grade engineering thermoplastic
- O-rings: silicone/N.A.
- Band/hardware: CRES/passivate

Application Notes

- Standard minimum length is 1.50 inches, applies to Symbol S, Straight only
- For effective grounding, connector with conductive finish should be used.

How To Order

Sample Part Number	443HS042	ME	12	04	-8	K	P
Product	**443HS042** = Series 23, Straight Backshell **443HN042** = Series 23, 90° Angle Backshell **443HM042** = Series 23, 45° Angle Backshell						
Material/ Finish	**ME** = Aluminum, Electroless Nickel **MT** = Aluminum, Ni/PTFE **NF** = Aluminum, Olive Drab Cadmium **TZ** = Tin-Zinc **ZR** = Aluminum, Black Zinc-Nickel **Z1** = Stainless Steel, Passivated						
Shell Size	**08 09 10 11 12 14 16 18 20 22 24**						
Dash No	See Dash Number Table						
Length	*Designate in .25 inch increments (eg. 8 = 2.0 inches)* *Applies to straight backshell only*						
Band	**K** = precoiled band (omit if not required)						
Plating Shield	**P** = Polysulfide (omit if not required); when polysulfide barrier is selected for plating, shield termination surface shall be electroless nickel plated only. Applies to "NF", "TZ", and "ZR"						

Dash Number

DASH NO	J MAX	CABLE RANGE MIN	CABLE RANGE MAX	W CLOSED	H MIN DIA
01	1.05 (26.67)	0.125 (3.18)	0.250 (6.35)	0.264 (6.71)	0.25 (6.35)
02	1.20 (30.48)	0.188 (4.78)	0.375 (9.52)	0.344 (8.74)	0.37 (9.40)
03	1.30 (33.02)	0.312 (7.92)	0.438 (11.13)	0.460 (11.68)	0.43 (10.92)
04	1.44 (36.58)	0.343 (8.71)	0.500 (12.70)	0.545 (13.84)	0.50 (12.70)
05	1.69 (42.93)	0.438 (11.13)	0.625 (15.88)	0.698 (17.73)	0.62 (15.75)
06	1.77 (44.96)	0.562 (14.27)	0.750 (19.05)	0.780 (19.81)	0.75 (19.05)
07	2.12 (53.85)	0.688 (17.48)	0.875 (22.23)	0.950 (24.13)	0.87 (22.10)
08	2.50 (63.50)	0.812 (20.62)	1.000 (25.40)	1.015 (25.78)	1.00 (25.40)
09	2.62 (66.55)	0.938 (23.83)	1.125 (28.58)	1.187 (30.15)	1.12 (28.45)

© 2022 Glenair, Inc • 1211 Air Way, Glendale, CA 91201 • 818-247-6000 • www.glenair.com • U.S. CAGE code 06324 • SuperNine® Catalog
Dimensions in Inches (millimeters) are subject to change without notice.

SuperNine® Backshells and accessories

MIL-DTL-38999 Series III Type

443H*042 EMI/RFI Environmental, Cable Clamp for Size #8 Contacts

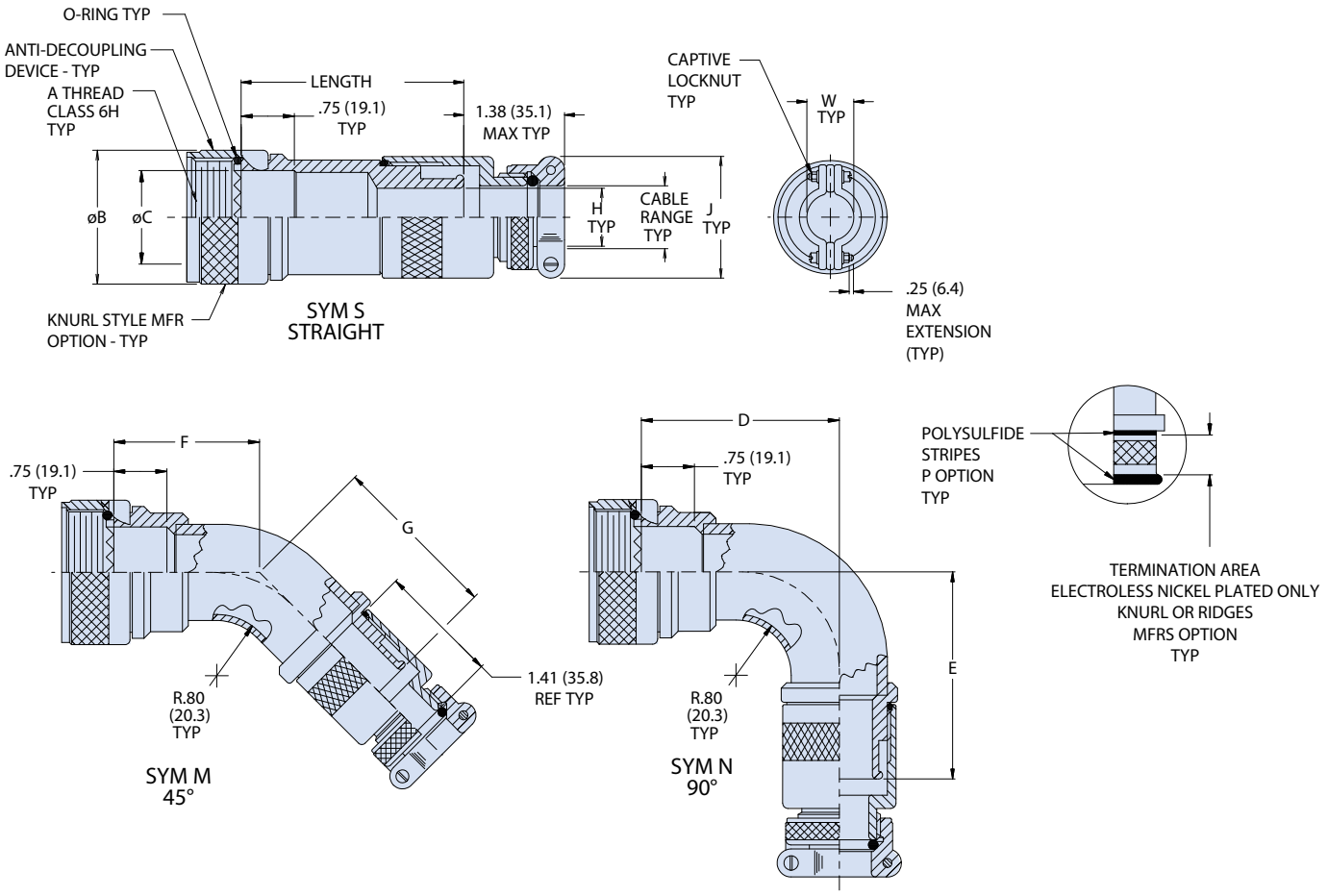

Dimensions								
Shell Size	A Thd ISO Metric	ØB Max	ØC ±.005 (0.13)	D Max	B Max	F Max	G Max	Max Entry
08	M10 X 1	.710(18.0)	0.269 (6.80)	1.853(47.1)	1.903(48.3)	1.393(35.4)	1.443(36.7)	01
09	M12 X 1	.790(20.1)	0.346 (8.80)	1.853(47.1)	1.903(48.3)	1.393(35.4)	1.443(36.7)	01
10	M14 X 1	.890(22.6)	.410(10.4)	1.915(48.6)	1.965(49.9)	1.420(36.1)	1.470(37.3)	02
11	M15 X 1	.930(23.6)	.471(11.9)	1.915(48.6)	1.965(49.9)	1.420(36.1)	1.470(37.3)	02
12	M17 X 1	1.010(25.7)	.539(13.7)	2.067(52.5)	2.117(53.8)	1.445(36.7)	1.495(38.0)	04
14	M19 X 1	1.090(27.7)	.592(15.0)	2.067(52.5)	2.117(53.8)	1.445(36.7)	1.495(38.0)	04
16	M22 X 1	1.210(30.7)	.740(18.8)	2.130(54.1)	2.180(55.4)	1.501(38.1)	1.551(39.4)	05
18	M25 X 1	1.330(33.8)	.856(21.7)	2.235(56.8)	2.285(58.0)	1.540(39.1)	1.590(40.4)	06
20	M28 X 1	1.450(36.8)	.980(24.9)	2.298(58.4)	2.348(59.6)	1.566(39.8)	1.616(41.0)	07
22	M31 X 1	1.570(39.9)	1.070(27.2)	2.359(59.9)	2.409(61.2)	1.548(39.3)	1.598(40.6)	08
24	M34 X 1	1.710(43.4)	1.214(30.8)	2.380(60.5)	2.430(61.7)	1.570(39.9)	1.620(41.1)	09

© 2022 Glenair, Inc • 1211 Air Way, Glendale, CA 91201 • 818-247-6000 • www.glenair.com • U.S. CAGE code 06324 • SuperNine® Catalog
Dimensions in Inches (millimeters) are subject to change without notice.

SuperNine® Backshells and accessories

MIL-DTL-38999 Series III Type

Series 77 Full Nelson® Heat Shrink boots

HEAT SHRINK BOOTS



Full Nelson Heat Shrink boots provide mechanical and environmental protection. Shape-memory polymer returns to as-molded shape when heat is applied. Use with 310-045 composite shrink boot adapter. Boot lip fits adapter groove for precise fit. Semi-rigid high performance elastomer resists high temperature and withstands exposure to petroleum-based fluids and fuels. Also available with non-halogenated flame-retardant polyolefin for use where limited fire hazard is required.

About User-Installed Adhesive

Heat-shrink boots are not watertight unless equipped with pre-coated or user-installed adhesives. When heat is applied to the boot, the adhesive melts and fixes the boot to the adapter and cable jacket to provide the necessary sealing as well as mechanical strain-relief. For maximum performance Glenair recommends Type U user-installed two-part epoxy adhesive which offers reduced boot installation time and easier installation. Pre-coated boots require additional care to install because the boot must be heated sufficiently to activate the epoxy, at the risk of overheating the overall assembly. A single 50 ml duo syringe can coat many boots. The duo syringe can be re-capped for re-use. Inexpensive mixing nozzles must be discarded after each use.

NOTE: Glenair high-performance two part epoxy meets VG95343 part 15.

See next page for ordering information on user-installed two part epoxy adhesive.



Series 77 "Full Nelson" Shrink Boot Catalog has additional boot styles, materials and adhesives, installation instructions and other heatshrink products. Contact Glenair or go to *www.glenair.com*.

MATERIAL SELECTION GUIDE

1 **High-Performance Elastomer** -75°C to +150°C**.** Semi-rigid high performance elastomer combines excellent resistance to fuels, oils, and solvents with superior performance at extreme temperatures. Material meets the requirements of VG95343 Type 6, BSG 198-5-DE, EN62329-102 and SAE AS5258 Type H. These boots are recommended for demanding applications such as military vehicles and petrochemical exploration.

2 **Zero Halogen Polyolefin** -40°C to +130°C**.** Low Smoke Zero Halogen (LSZH) polyolefin boots meet low smoke and toxicity requirements of shipboard, transit and aircraft systems. Oxygen index greater than 30%, smoke index less than 20, and toxicity index under 3 per 100 grams. Material meets requirements of NAVSEA 5617649, VG95343 Part 28 and 29, BSG 198-5-DF, EN62329-101 and SAE AS5258 Type G. Good resistance to oils, fuels and solvents.

PRE-COATED ADHESIVE SELECTION GUIDE

W1 **Low Smoke Zero halogen (LSZH) polyamide hot melt adhesive Coating.** Bonds well to a variety of substrates. Good creep resistance at elevated temperatures. Excellent bond strength at low temperature. Good resistance to fuels and oils. -55°C to +125°C. Compatible with Type 1 and Type 2 boot materials.

R **High Temperature Epoxy Adhesive Coating**. Glenair's highest performance pre-coated adhesive. The material requires careful installation using trained operators. -75°C to 150°C. Withstands prolonged high temperature immersion in fuels and oils. Excellent peel adhesion on a wide range of materials.

Part Number Development

Series	Material	Boot Size	Adhesive Lining
770-003S Heat Shrink Boot; Lipped, Straight	**1** High Performance Semi-Rigid Elastomer, -75°C to +150°C **2** Low Smoke, Zero Halogen; Semi-Rigid Polyolefin; -30°C to +135°C	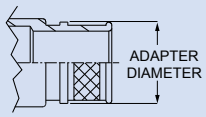	***Omit*** for no adhesive lining. **W1** Hot Melt Adhesive Low Smoke, Zero Halogen -55°C to +125°C **R** High Temperature Epoxy Adhesive -75°C to +150°C.

Adapter Diameter

Boot Size	Inches Min.	Inches Max.	mm. Min.	mm. Max.
03	.450	.850	11.4	21.6
04	.600	1.000	15.2	25.4
05	.750	1.200	19.1	30.5
06	.900	1.350	22.9	34.3
07	1.250	1.650	31.8	41.9

Sample Part Number

770-003S	2	06	R

© 2022 Glenair, Inc • 1211 Air Way, Glendale, CA 91201 • 818-247-6000 • www.glenair.com • U.S. CAGE code 06324 • SuperNine® Catalog
Dimensions in Inches (millimeters) are subject to change without notice.

SuperNine® Backshells and accessories

MIL-DTL-38999 Series III Type

Series 77 Full Nelson® heat shrink boots

HEATSHRINK BOOT DIMENSIONS

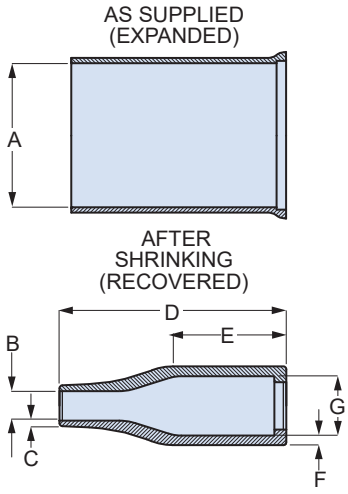

Boot Size	A Min.		B Max.		C ± 20%		D ± 10%		E Ref.		F ± 30%		G Max.	
	In.	mm.	In.	mm.	In.	mm.	In.	mm.	In.	mm.	In.	mm.	In.	mm.
03	.945	24.0	.197	5.0	.035	0.9	1.496	38.0	.748	19.0	.063	1.6	.413	10.5
04	1.181	30.0	.236	6.0	.039	1.0	2.165	55.0	1.181	30.0	.071	1.8	.551	14.0
05	1.260	32.0	.276	7.0	.047	1.2	2.638	67.0	1.299	33.0	.071	1.8	.709	18.0
06	1.417	36.0	.335	8.5	.047	1.2	3.150	80.0	1.575	40.0	.079	2.0	.866	22.0
07	1.693	43.0	.394	10.0	.051	1.3	3.898	99.0	2.165	55.0	.087	2.2	1.102	28.0

BOOT IDENTIFICATION MARKING

Heatshrink boots are identified with molded-in lettering. This lettering shows the boot type, boot size and orientation. Position the boot so that the lipped "A" end is toward the adapter and the "C" end is toward the cable. Assembly instructions are in the ***Series 77 "Full Nelson" Environmental Shrink Boots*** catalog, available at www.glenair.com.

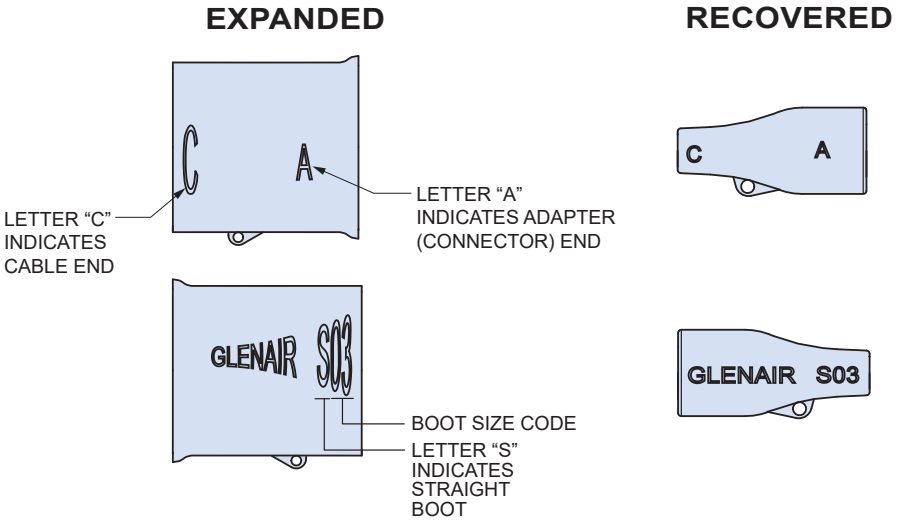

USER-INSTALLED BOOT ADHESIVE, DISPENSING GUN AND MIXING NOZZLE



Part Number
779-001

High performance flexible two part thermoset epoxy provides high strength flexible bond from -55° to 150°C. 50 ml duo syringe fits standard dispensing guns. Use with square green mixing nozzle sold separately. 12 hour cure time at 20°C, 1 hour at 85°C, 30 minutes at 150°C. Apply to inside of boot with wooden spatula. 18 month shelf life.



Part Number
779-002

Twin push-rod 1:1 ratio epoxy dispensing gun for use with duo syringe epoxy and mixing nozzle sold separately. Durable heavy-duty plastic. Gun type hand grip with ratcheting trigger to advance push-rods.



Part Number	Count Per Pack
779-003	12

1:1 ratio mixing nozzle attaches to duo syringe with 1/2 turn and locks into place. Nozzle provides consistent mixing of resin and hardener. Kit consists of (12) nozzles.

© 2022 Glenair, Inc • 1211 Air Way, Glendale, CA 91201 • 818-247-6000 • www.glenair.com • U.S. CAGE code 06324 • SuperNine® Catalog

Dimensions in Inches (millimeters) are subject to change without notice.

SuperNine® Backshells and accessories

MIL-DTL-38999 Series III Type

870H001 Swing-Arm Saddle Clamp

Self-Locking



Self-locking, adjustable arms. 870H001 Swing-Arm saddle clamp fits MIL-DTL-38999 Series III and IV connectors. Use with unshielded wire bundles. Adjustable arms pivot to 0°, 45° or 90° positions. Arms have self-locking threaded inserts to withstand high vibration. Full radius saddles have self-locking clinch nuts. Available in two clamp sizes: standard clamp fits most wire bundles, large clamp has increased clearance for oversize wire bundles. Coupling nut has anti-decoupling mechanism for audible detented coupling and prevents backoff under high vibration. Available in composite, aluminum or stainless steel.

Adapter Code H

This accessory fits these connectors:
MIL-DTL-38999 Series III and Series IV

ALUMINUM AND SST VERSIONS

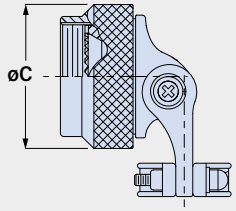

Aluminum and stainless steel versions have round knurled coupling nuts.

PART NUMBER

	870H001	XB	23	B

Base P/N	**870H001**
Material/Finish	*Composite* **XB** No Finish (Black) *Aluminum* **M** Electroless Nickel **NF** Olive Drab Cadmium **MT** Nickel-PTFR **TZ** Tin-Zinc **ZR** Black Zinc-Nickel *Stainless Steel* **Z1** Passivated
Shell Size	Shell: 9 11 13 15 17 19 21 23 25 Size: A B C D E F G H J Size Code: **09 11 13 15 17 19 21 23 25**
Clamp Size	**A** Standard Clamp **B** Large Clamp

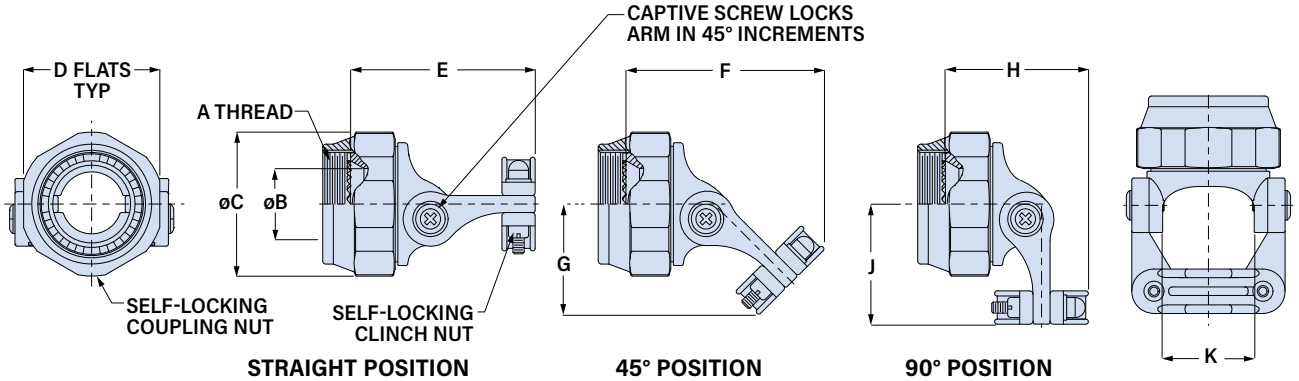

Shell Size	A Thread	øB Min in	øB Min mm	C Max in	C Max mm	D Flats in	D Flats mm	E Max in	E Max mm	F Max in	F Max mm	G Max in	G Max mm	H Max in	H Max mm	J Max in	J Max mm	K Ref. in	K Ref. mm
9 (A)	M12X1.0-6H	.264	6.7	.812	20.6	.750	19.1	1.43	36.3	1.35	34.3	.78	19.8	.91	23.1	.87	22.1	.393	10.0
11 (B)	M15X1.0-6H	.390	9.9	.938	23.8	.875	22.2	1.50	38.1	1.45	36.8	.87	22.1	.94	23.9	.96	24.4	.455	11.6
13 (C)	M18X1.0-6H	.504	12.8	1.125	28.6	1.000	25.4	1.56	39.6	1.60	40.6	.97	24.6	1.12	28.4	1.03	26.2	.598	15.2
15 (D)	M22X1.0-6H	.630	16.0	1.250	31.8	1.125	28.6	1.57	39.9	1.68	42.7	1.02	25.9	1.21	30.7	1.10	27.9	.710	18.0
17 (E)	M25X1.0-6H	.756	19.2	1.375	34.9	1.250	31.8	1.66	42.2	1.78	45.2	1.09	27.7	1.29	32.8	1.16	29.5	.839	21.3
19 (F)	M28X1.0-6H	.843	21.4	1.500	38.1	1.375	34.9	1.66	42.2	1.86	47.2	1.14	29.0	1.39	35.3	1.22	31.0	.934	23.7
21 (G)	M31X1.0-6H	.969	24.6	1.625	41.3	1.500	38.1	1.81	46.0	2.02	51.3	1.24	31.5	1.50	38.1	1.29	32.8	1.068	27.1
23 (H)	M34X1.0-6H	1.091	27.7	1.750	44.5	1.625	41.3	1.84	46.7	2.09	53.1	1.30	33.0	1.57	39.9	1.36	34.5	1.197	30.4
25 (J)	M37X1.0-6H	1.217	30.9	1.875	47.6	1.750	44.5	2.00	50.8	2.20	55.9	1.45	36.8	1.64	41.7	1.55	39.4	1.323	33.6

© 2022 Glenair, Inc • 1211 Air Way, Glendale, CA 91201 • 818-247-6000 • www.glenair.com • U.S. CAGE code 06324 • SuperNine® Catalog
Dimensions in Inches (millimeters) are subject to change without notice.

SuperNine® Backshells and accessories

MIL-DTL-38999 Series III Type

870H001 Swing-Arm Saddle Clamp

CLAMP DIMENSIONS

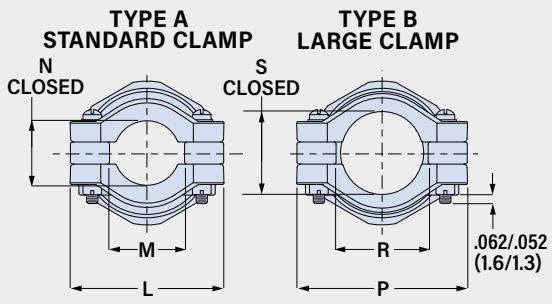

Standard Clamp						
Shell Size	L Max in	L Max mm	M Min in	M Min mm	N Ref. in	N Ref. mm
9 (A)	.98	24.9	.22	5.6	.265	6.7
11 (B)	1.05	26.7	.27	6.9	.310	7.9
13 (C)	1.20	30.5	.35	8.9	.422	10.7
15 (D)	1.30	33.0	.47	11.9	.538	13.7
17 (E)	1.44	36.6	.55	14.0	.590	15.0
19 (F)	1.56	39.6	.62	15.7	.660	16.8
21 (G)	1.69	42.9	.70	17.8	.744	18.9
23 (H)	1.77	45.0	.78	19.8	.826	21.0
25 (J)	1.89	48.0	.85	21.6	.896	22.8

Large Clamp						
Shell Size	P Max in	P Max mm	R Min in	R Min mm	S Ref. in	S Ref. mm
9 (A)	.98	24.9	.33	8.4	.356	9.0
11 (B)	1.20	30.5	.45	11.4	.422	10.7
13 (C)	1.45	36.8	.62	15.7	.637	16.2
15 (D)	1.54	39.1	.68	17.3	.707	18.0
17 (E)	1.60	40.6	.80	20.3	.759	19.3
19 (F)	1.73	43.9	.90	22.9	.841	21.4
21 (G)	1.95	49.5	1.05	26.7	.996	25.3
23 (H)	2.08	52.8	1.18	30.0	1.060	26.9
25 (J)	2.32	58.9	1.30	33.0	1.124	28.5

MATERIAL/FINISH

Composite *(Code XB)*
- **Coupling nut, body, arms, saddles:** polyetherimide (PEI), unplated
- **Screws, washers, inserts:** stainless steel/ passivated
- **Anti-decoupling springs:** thermoplastic
- **Clinch Nuts:** stainless steel, silver plated

Aluminum *(Codes M, MT, NF, TZ, ZR)*
- **Coupling nut, body, arms, saddles:** aluminum
- **Screws, washers, inserts:** stainless steel/ passivated
- **Anti-decoupling springs:** thermoplastic
- **Clinch Nuts:** Codes M, MT, TZ and ZR: stainless steel, silver plated.
  Code NF: stainless steel/ olive drab cadmium

Stainless Steel *(Code Z1)*
- **Coupling nut, body, arms, saddles:** SST
- **Screws, washers, inserts:** stainless steel/ passivated
- **Anti-decoupling springs:** stainless steel
- **Clinch Nuts:** stainless steel, silver plated

© 2022 Glenair, Inc • 1211 Air Way, Glendale, CA 91201 • 818-247-6000 • www.glenair.com • U.S. CAGE code 06324 • SuperNine® Catalog
Dimensions in Inches (millimeters) are subject to change without notice.

SuperNine® Backshells and accessories

MIL-DTL-38999 Series III Type

870H002 Swing-Arm Saddle Clamp, Braid Sock, Composite

Self-Locking



Adapter Code H

This accessory fits these connectors:
MIL-DTL-38999 Series III and Series IV

Shielded, self-locking, adjustable arms. 870H002 composite Swing-Arm saddle clamp fits MIL-DTL-38999 Series III and IV connectors. Adjustable arms pivot to 0°, 45° or 90° positions. Supplied with 12 inches (305 mm) of shield braid attached to metal interface ring. Braid choices include 34 AWG nickel/copper, 34 AWG tin/copper, ultralightweight AmberStrand® or microfilament nickel/SST Armorlite®. Corrosion-resistant glass-reinforced thermoplastic meets AS85049 requirements. Full radius saddles have self-locking clinch nuts. Available in two clamp sizes: standard clamp fits most wire bundles, large clamp has increased clearance for oversize wire bundles. Coupling nut has anti-decoupling mechanism for audible detented coupling and prevents backoff under high vibration.

TABLE 1
INTERFACE RING MATERIAL / FINISH

Aluminum	
M	Electroless Nickel
NF	Olive Drab Cadmium and Electroless Nickel *(Figure 1)*
MT	Nickel-PTFE
TZ	Tin-Zinc
ZR	Black Zinc-Nickel
Brass	
BM	Electroless Nickel
BN	Olive Drab Cadmium and Electroless Nickel *(Figure 1)*
BMT	Nickel-PTFE

PART NUMBER

	870H002	BM	21	B	L	K	14

Base P/N	870H002
Interface Ring Material/Finish	*See Table 1*
Shell Size	Shell Size: 9 A, 11 B, 13 C, 15 D, 17 E, 19 F, 21 G, 23 H, 25 J Size Code: 09, 11, 13, 15, 17, 19, 21, 23, 25
Clamp Size	*See Clamp Dimensions on next page* A Standard Clamp B Large Clamp
Braid Type	N 34 AWG Nickel/Copper Braid T 34 AWG Tin/Copper Braid A AmberStrand® Nickel/Composite Braid L Microfilament ArmorLite® Nickel/SST Braid
Splice Ring and Band	*Omit if not required* K Splice ring and standard band J Splice ring and slim standard band
Braid Length	*Omit for standard 12 inch length* 14 Length in 1 inch increments, 6 inch min "14" = 14 inches.

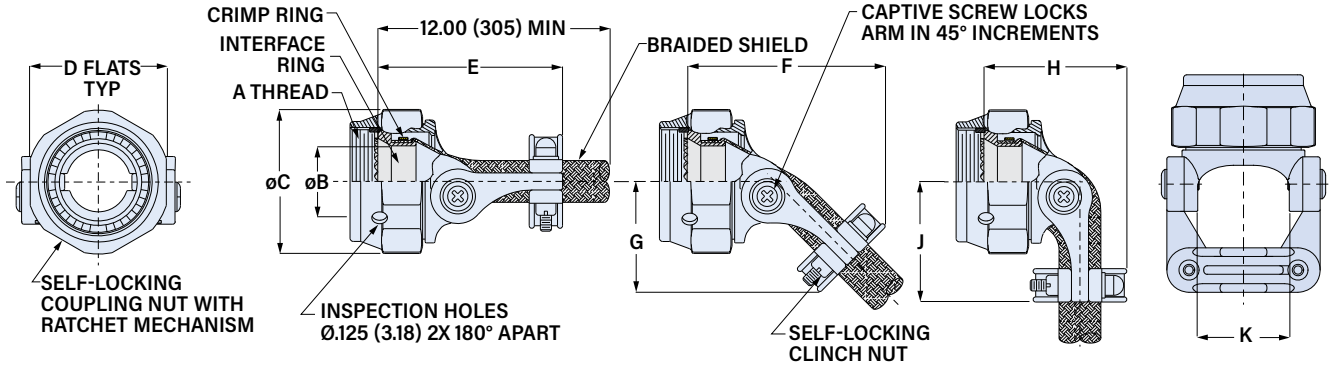

Shell Size	A Thread	øB Min in	øB Min mm	ø C Max in	ø C Max mm	D Flats in	D Flats mm	E Max in	E Max mm	F Max in	F Max mm	G Max in	G Max mm	H Max in	H Max mm	J Max in	J Max mm	K Ref. in	K Ref. mm
9 (A)	M12X1.0-6H	.264	6.7	.812	20.6	.750	19.1	1.50	38.1	1.43	36.3	.76	19.3	.95	24.1	.84	21.3	.393	10.0
11 (B)	M15X1.0-6H	.390	9.9	.938	23.8	.875	22.2	1.54	39.1	1.49	37.8	.82	20.8	.99	25.1	.90	22.9	.455	11.6
13 (C)	M18X1.0-6H	.504	12.8	1.125	28.6	1.000	25.4	1.62	41.1	1.64	41.7	.92	23.4	1.14	29.0	1.00	25.4	.598	15.2
15 (D)	M22X1.0-6H	.630	16.0	1.250	31.8	1.125	28.6	1.63	41.4	1.73	43.9	.98	24.9	1.24	31.5	1.07	27.2	.710	18.0
17 (E)	M25X1.0-6H	.756	19.2	1.375	34.9	1.250	31.8	1.73	43.9	1.86	47.2	1.08	27.4	1.36	34.5	1.13	28.7	.839	21.3
19 (F)	M28X1.0-6H	.843	21.4	1.500	38.1	1.375	34.9	1.73	43.9	1.93	49.0	1.12	28.4	1.46	37.1	1.20	30.5	.934	23.7
21 (G)	M31X1.0-6H	.969	24.6	1.625	41.3	1.500	38.1	1.88	47.8	2.08	52.8	1.21	30.7	1.55	39.4	1.26	32.0	1.068	27.1
23 (H)	M34X1.0-6H	1.091	27.7	1.750	44.5	1.625	41.3	1.91	48.5	2.15	54.6	1.27	32.3	1.63	41.4	1.33	33.8	1.197	30.4
25 (J)	M37X1.0-6H	1.217	30.9	1.875	47.6	1.750	44.5	1.94	49.3	2.23	56.6	1.33	33.8	1.70	43.2	1.40	35.6	1.323	33.6

© 2022 Glenair, Inc • 1211 Air Way, Glendale, CA 91201 • 818-247-6000 • www.glenair.com • U.S. CAGE code 06324 • SuperNine® Catalog
Dimensions in Inches (millimeters) are subject to change without notice.

SuperNine® Backshells and accessories

MIL-DTL-38999 Series III Type

870H002 Swing-Arm Saddle Clamp, Braid Sock, Composite

CLAMP DIMENSIONS

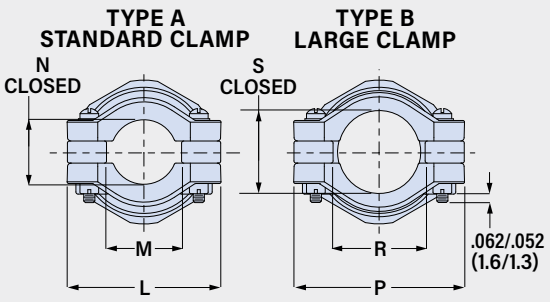

Shell Size	Standard Clamp L Max in	L Max mm	M Min in	M Min mm	N Ref. in	N Ref. mm
9 (A)	.98	24.9	.22	5.6	.265	6.7
11 (B)	1.05	26.7	.27	6.9	.310	7.9
13 (C)	1.20	30.5	.35	8.9	.422	10.7
15 (D)	1.30	33.0	.47	11.9	.538	13.7
17 (E)	1.44	36.6	.55	14.0	.590	15.0
19 (F)	1.56	39.6	.62	15.7	.660	16.8
21 (G)	1.69	42.9	.70	17.8	.744	18.9
23 (H)	1.77	45.0	.78	19.8	.826	21.0
25 (J)	1.89	48.0	.85	21.6	.896	22.8

Shell Size	Large Clamp P Max in	P Max mm	R Min in	R Min mm	S Ref. in	S Ref. mm
9 (A)	.98	24.9	.33	8.4	.356	9.0
11 (B)	1.20	30.5	.45	11.4	.422	10.7
13 (C)	1.45	36.8	.62	15.7	.637	16.2
15 (D)	1.54	39.1	.68	17.3	.707	18.0
17 (E)	1.60	40.6	.80	20.3	.759	19.3
19 (F)	1.73	43.9	.90	22.9	.841	21.4
21 (G)	1.95	49.5	1.05	26.7	.996	25.3
23 (H)	2.08	52.8	1.18	30.0	1.060	26.9
25 (J)	2.32	58.9	1.30	33.0	1.124	28.5

MATERIAL/FINISH

Coupling nut, body, arms, saddles: polyetherimide (PEI)/unplated
Screws, washers, inserts: stainless steel/passivated
Anti-decoupling spring: thermoplastic
interface Ring: brass or aluminum
Crimp ring: copper alloy/tin
Splice ring (optional): thermoplastic
Clinch Nuts: stainless steel/silver
Band (optional): stainless steel/passivated
Braid:
- **Code N:** 34 AWG nickel-coated copper
- **Code T:** 34 AWG tin-coated copper,
- **Code A:** ***AmberStrand***® ultralightweight nickel-coated polymer
- **Code L:** ***ArmorLite***® lightweight microfilament nickel-coated 316L stainless steel

INTERFACE RING AND BRAID

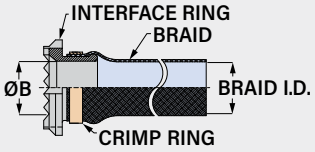

Shell Size	ø B Min in	ø B Min mm	Braid I.D. in	Braid I.D. mm
9 (A)	.264	6.7	.375	9.5
11 (B)	.390	9.9	.375	9.5
13 (C)	.504	12.8	.500	12.7
15 (D)	.630	16.0	.500	12.7
17 (E)	.756	19.2	.781	19.8
19 (F)	.843	21.4	.781	19.8
21 (G)	.969	24.6	1.000	25.4
23 (H)	1.091	27.7	1.000	25.4
25 (J)	1.217	30.9	1.250	31.8

FIGURE 1
NF AND BN SELECTIVE FINISH

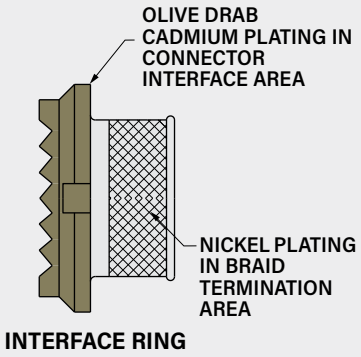

SPLICE RING AND PRE-COILED BAND (K AND J OPTIONS)



Splice Ring



Band

Optional splice ring provides a reliable, low resistance method of splicing Swing-Arm braid to wire bundle braid. Snap splice ring over wire bundle, then overlap braid sock, pigtails and cable braid. install band around splice ring and braid using Band-Master ATS banding tool.

Slim Standard Band is 50% lighter weight than standard band with no reduction in strength.

Shell Size	Band Part Number Standard	Band Part Number Slim Standard	Splice Ring Part Number	øA ± .03 (0.8) in	øA ± .03 (0.8) mm	øB ± .03 (0.8) in	øB ± .03 (0.8) mm
9 (A)	601-006	601-571	687-207XB04	.25	6.4	.40	10.2
11 (B)	601-006	601-571	687-207XB06	.38	9.7	.53	13.5
13 (C)	601-006	601-571	687-207XB08	.50	12.7	.65	16.5
15 (D)	601-006	601-571	687-207XB10	.63	16.0	.78	19.8
17 (E)	601-006	601-571	687-207XB12	.75	19.1	.90	22.9
19 (F)	601-041	601-573	687-207XB14	.88	22.4	1.03	26.2
21 (G)	601-041	601-573	687-207XB16	1.00	25.4	1.15	29.2
23 (H)	601-041	601-573	687-207XB18	1.13	28.7	1.28	32.5
25 (J)	601-041	601-573	687-207XB20	1.25	31.8	1.40	35.6

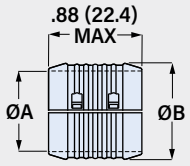

687-207
SPLICE RING



Banding Tool for Standard Band
601-100



Banding Tool for Slim Standard Band
601-109

© 2022 Glenair, Inc • 1211 Air Way, Glendale, CA 91201 • 818-247-6000 • www.glenair.com • U.S. CAGE code 06324 • SuperNine® Catalog

Dimensions in Inches (millimeters) are subject to change without notice.

SuperNine® Backshells and accessories

MIL-DTL-38999 Series III Type

870H005 Swing-Arm Saddle Clamp, EMI Banding Adapter, Metal

Self-Locking



Adapter Code H

This accessory fits these connectors:
MIL-DTL-38999 Series III and Series IV

Shielded, self-locking, adjustable arms. 870H005 aluminum or stainless steel Swing-Arm saddle clamp fits MIL-DTL-38999 Series III and IV connectors. Adjustable arms pivot to 0°, 45° or 90° positions. Banding adapter has optional "T" slots for pigtailed individual shields. Terminate shield braid to adapter with optional Band-Master ATS® pre-coiled banding strap. Full radius saddles with self-locking clinch nuts. Available in two clamp sizes: standard clamp fits most wire bundles, large clamp has increased clearance for oversize wire bundles. Coupling nut has anti-decoupling mechanism for audible detented coupling and prevents backoff under high vibration.

TABLE 1 MATERIAL / FINISH

Aluminum	
M	Electroless nickel
MT	Nickel-PTFE
NF	Olive drab cadmium
NFS	Olive drab cadmium, selective (fig. 1)
TZ	Tin-zinc
ZR	Black zinc-nickel
Stainless Steel, Passivated	
BM	Brass interface ring, nickel plated
BMT	Brass interface ring, nickel-PTFE plated
Z1	SST interface ring, passivated
ZM	SST interface ring, nickel plated

PART NUMBER

	870H005	M	23	A	S	K

Base P/N — 870H005

Material/Finish — *See Table 1*

Shell Size

Shell Size	9 A	11 B	13 C	15 D	17 E	19 F	21 G	23 H	25 J
Size Code	09	11	13	15	17	19	21	23	25

Clamp Size
- A Standard Clamp
- B Large Clamp

Banding Adapter Slots — *Omit if not required. See Figure 2.*
- S "T" Slots in Banding Adapter for Shield Pigtails

Band — *Omit if not required.*
- K Pre-Coiled Micro Band included With Clamp
- J Pre-Coiled Slim Micro Band included With Clamp

FIGURE 1
MATERIAL/ FINISH CODE *NFS*

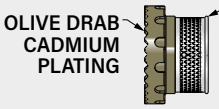

FIGURE 2
BANDING ADAPTER SLOTS



Route pigtail shield braids into optional "T" slots in banding adapter.

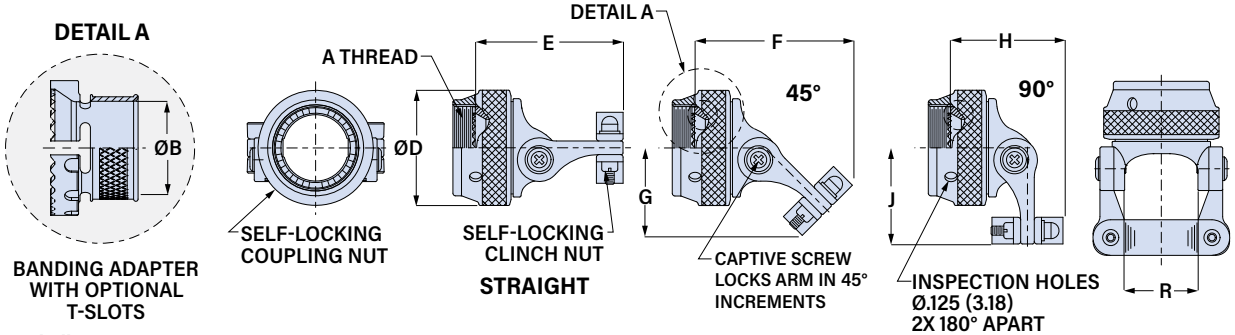

Shell Size	A Thread	ø B Min in	ø B Min mm	D Max in	D Max mm	E Max in	E Max mm	F Max in	F Max mm	G Max in	G Max mm	H Max in	H Max mm	J Max in	J Max mm	R Ref. in	R Ref. mm
9 (A)	M12X1.0-6H	.178	4.5	.812	20.6	1.55	39.4	1.45	36.8	.77	19.6	.98	24.9	.87	22.1	.393	10.0
11 (B)	M15X1.0-6H	.305	7.7	.938	23.8	1.61	40.9	1.56	39.6	.87	22.1	1.05	26.7	.96	24.4	.455	11.6
13 (C)	M18X1.0-6H	.404	10.3	1.125	28.6	1.66	42.2	1.71	43.4	.97	24.6	1.22	31.0	1.03	26.2	.598	15.2
15 (D)	M22X1.0-6H	.565	14.4	1.250	31.8	1.67	42.4	1.79	45.5	1.02	25.9	1.32	33.5	1.10	27.9	.710	18.0
17 (E)	M25X1.0-6H	.658	16.7	1.375	34.9	1.77	45.0	1.88	47.8	1.08	27.4	1.38	35.1	1.16	29.5	.839	21.3
19 (F)	M28X1.0-6H	.777	19.7	1.500	38.1	1.77	45.0	1.96	49.8	1.13	28.7	1.49	37.8	1.22	31.0	.934	23.7
21 (G)	M31X1.0-6H	.877	22.3	1.625	41.3	1.92	48.8	2.13	54.1	1.24	31.5	1.61	40.9	1.29	32.8	1.068	27.1
23 (H)	M34X1.0-6H	.999	25.4	1.750	44.5	1.95	49.5	2.20	55.9	1.30	33.0	1.68	42.7	1.36	34.5	1.197	30.4
25 (J)	M37X1.0-6H	1.127	28.6	1.875	47.6	2.10	53.3	2.31	58.7	1.39	35.3	1.75	44.5	1.55	39.4	1.323	33.6

© 2022 Glenair, Inc • 1211 Air Way, Glendale, CA 91201 • 818-247-6000 • www.glenair.com • U.S. CAGE code 06324 • SuperNine® Catalog
Dimensions in Inches (millimeters) are subject to change without notice.

SuperNine® Backshells and accessories

MIL-DTL-38999 Series III Type

870H005 Swing-Arm Saddle Clamp, EMI Banding Adapter, Metal

CLAMP DIMENSIONS

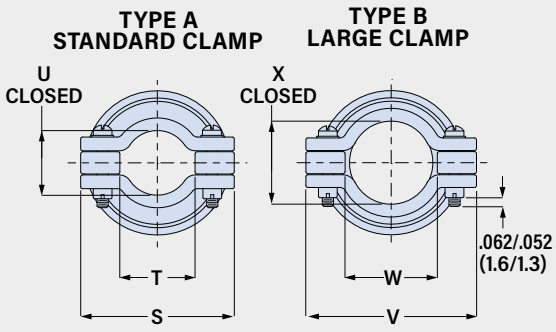

Standard Clamp						
Shell Size	S Max		T Min		U Ref.	
	in	mm	in	mm	in	mm
9 (A)	.97	24.6	.22	5.6	.264	6.7
11 (B)	1.03	26.2	.29	7.4	.310	7.9
13 (C)	1.21	30.7	.34	8.6	.422	10.7
15 (D)	1.32	33.5	.45	11.4	.538	13.7
17 (E)	1.45	36.8	.55	14.0	.590	15.0
19 (F)	1.54	39.1	.65	16.5	.660	16.8
21 (G)	1.67	42.4	.74	18.8	.744	18.9
23 (H)	1.79	45.5	.87	22.1	.826	21.0
25 (J)	1.92	48.8	.99	25.1	.896	22.8

Large Clamp						
Shell Size	V Max		W Min		X Ref.	
	in	mm	in	mm	in	mm
9 (A)	.98	24.9	.33	8.4	.356	9.0
11 (B)	1.20	30.5	.45	11.4	.422	10.7
13 (C)	1.45	36.8	.62	15.7	.637	16.2
15 (D)	1.54	39.1	.68	17.3	.707	18.0
17 (E)	1.60	40.6	.80	20.3	.759	19.3
19 (F)	1.73	43.9	.90	22.9	.841	21.4
21 (G)	1.95	49.5	1.05	26.7	.996	25.3
23 (H)	2.08	52.8	1.18	30.0	1.060	26.9
25 (J)	2.32	58.9	1.30	33.0	1.124	28.5

MATERIAL/FINISH

Aluminum *(Codes M, MT, NF, NFS TZ, ZR)*
- **Coupling nut, body, arms, saddles, interface ring**: aluminum
- **Screws, washers, inserts**: stainless steel/ passivated
- **Anti-decoupling springs**: thermoplastic
- **Clinch nuts**: Codes M, MT, TZ and ZR: stainless steel, silver plated. Code NF, NFS: stainless steel/ olive drab cadmium
- **Banding adapter**: aluminum
- **Band (optional)**: stainless steel/ passivated

Stainless Steel *(Codes BM, BMT, Z1, ZM)*
- **Coupling nut, body, arms, saddles, anti-decoupling springs, screws, washers, inserts**: stainless steel, passivated
- **Clinch nuts**: stainless steel, silver plated
- **Banding adapter**:
  - Code BM: brass/ electroless nickel
  - Code BMT: brass/ nickel-PTFE
  - Code Z1: stainless steel/ passivated
  - Code ZM: stainless steel/ electroless nickel
- **Band (optional)**: stainless steel/ passivated

BAND INFORMATION

Terminate cable braid to band adapter with optional pre-coiled banding strap. Glenair's Band-Master ATS® banding system provides quick, easy, cost-effective and highly reliable termination. Band is passivated stainless steel.



Band



Micro Band Tool
601-101



Slim Micro Band Tool
601-122

Shell Size	Pre-Coiled Micro Band Part No.	Pre-Coiled Slim Micro Band Part No.	Length		Max Diameter	
			in	mm	in	mm
9 – 13	601-061	601-601	8.125	206	.88	22.4
15 – 25	601-065	601-603	14.25	362	1.88	47.8

© 2022 Glenair, Inc • 1211 Air Way, Glendale, CA 91201 • 818-247-6000 • www.glenair.com • U.S. CAGE code 06324 • SuperNine® Catalog
Dimensions in Inches (millimeters) are subject to change without notice.

SuperNine® Backshells and accessories

MIL-DTL-38999 Series III Type

871H004 Swing-Arm Flex Clamp, EMI Banding Adapter, Composite

Self-Locking



Adapter Code H

This accessory fits these connectors:
MIL-DTL-38999 Series III and Series IV

Shielded, self-locking, adjustable arms. 871H004 Swing-Arm Flex Clamp fits MIL-DTL-38999 Series III and IV connectors. Adjustable arms pivot to 0°, 45° or 90° positions. Includes EMI banding adapter with optional "T" slots for pigtailed individual shields. Terminate shield braid to adapter with optional Band-Master ATS® pre-coiled banding strap. Coupling nut has anti-decoupling mechanism for audible detented coupling and prevents backoff under high vibration.

FIGURE 1
FINISH CODES ***NFS***, ***BNS***

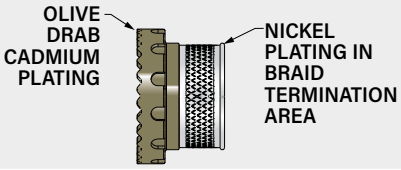

FIGURE 2
BANDING ADAPTER SLOTS

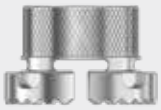

Route pigtail shield braids into optional "T" slots in banding adapter.

PART NUMBER

	871H004	M	23	S	K
Base P/N	871H004				
Banding Adapter Material/Finish	**M** Alum/Electroless Nickel **NF** Alum/Olive Drab Cadmium **NFS** Alum/O.D. Cadmium, selective (fig. 1) **MT** Alum/Nickel-PTFE **TZ** Alum/Tin-Zinc **BM** Brass/Electroless Nickel **BN** Brass/Olive Drab Cadmium **BNS** Brass/O.D. Cadmium, selective (fig. 1) **BMT** Brass/Nickel-PTFE				
Shell Size	Shell: 9 11 13 15 17 19 21 23 25 Size: A B C D E F G H J Size Code: 09 11 13 15 17 19 21 23 25				
Banding Adapter Slots	*Omit if not required. See Figure 2* **S** "T" Slots in Banding Adapter for Shield Pigtails				
Band	*Omit if not required.* **K** Pre-Coiled Micro Band included With Clamp **J** Pre-Coiled Slim Micro Band included With Clamp				

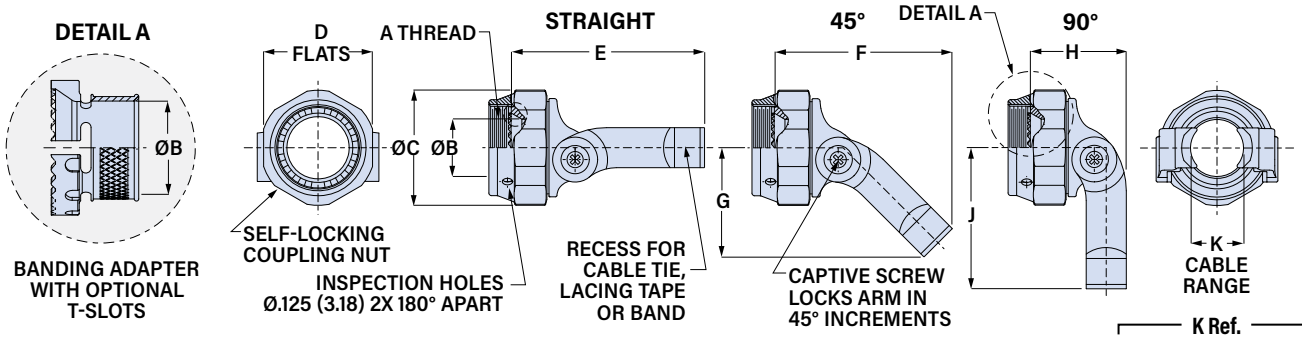

Shell Size	A Thread	ø B Min in	ø B Min mm	ø C Max in	ø C Max mm	D Flats in	D Flats mm	E Max in	E Max mm	F Max in	F Max mm	G Max in	G Max mm	H Max in	H Max mm	J Max in	J Max mm	K Ref. Max in	K Ref. Max mm	K Ref. Min in	K Ref. Min mm
9 (A)	M12X1.0-6H	.178	4.5	.812	20.6	.750	19.1	1.79	45.5	1.57	39.9	.87	22.1	.96	24.4	1.12	28.4	.393	10.0	.098	2.5
11 (B)	M15X1.0-6H	.305	7.8	.938	23.8	.875	22.2	1.80	45.7	1.57	39.9	.89	22.6	.96	24.4	1.15	29.2	.455	11.6	.121	3.1
13 (C)	M18X1.0-6H	.404	10.3	1.125	28.6	1.000	25.4	2.08	52.8	1.88	47.8	1.10	27.9	1.05	26.7	1.44	36.6	.598	15.2	.157	4.0
15 (D)	M22X1.0-6H	.565	14.4	1.250	31.8	1.125	28.6	2.08	52.8	1.88	47.8	1.16	29.5	1.32	33.5	1.50	38.1	.710	18.0	.210	5.3
17 (E)	M25X1.0-6H	.658	16.7	1.375	34.9	1.250	31.8	2.29	58.2	2.13	54.1	1.28	32.5	1.21	30.7	1.68	42.7	.839	21.3	.246	6.2
19 (F)	M28X1.0-6H	.777	19.7	1.500	38.1	1.375	34.9	2.28	57.9	2.13	54.1	1.35	34.3	1.21	30.7	1.81	46.0	.934	23.7	.277	7.0
21 (G)	M31X1.0-6H	.877	22.3	1.625	41.3	1.500	38.1	2.75	69.9	2.54	64.5	1.63	41.4	1.37	34.8	2.12	53.8	1.068	27.1	.313	8.0
23 (H)	M34X1.0-6H	.999	25.4	1.750	44.5	1.625	41.3	2.75	69.9	2.54	64.5	1.67	42.4	1.37	34.8	2.16	54.9	1.197	30.4	.349	8.9
25 (J)	M37X1.0-6H	1.127	28.6	1.875	47.6	1.750	44.5	2.96	75.2	2.75	69.9	1.84	46.7	1.46	37.1	2.41	61.2	1.323	33.6	.380	9.7

© 2022 Glenair, Inc • 1211 Air Way, Glendale, CA 91201 • 818-247-6000 • www.glenair.com • U.S. CAGE code 06324 • SuperNine® Catalog
Dimensions in Inches (millimeters) are subject to change without notice.

871H004 Swing-Arm Flex Clamp, EMI Banding Adapter, Composite

MATERIAL /FINISH

Coupling nut, body, arms: thermoplastic, black
Screws, washers, inserts: stainless steel/ passivated
Anti-decoupling springs: thermoplastic
Banding adapter: aluminum alloy or brass
Band (optional): stainless steel/ passivated

BAND INFORMATION

Terminate cable braid to band adapter with optional pre-coiled banding strap. Glenair's Band-Master ATS® banding system provides quick, easy, cost-effective and highly reliable termination. Band is passivated stainless steel.



Band



Micro Band Tool
601-101



Slim Micro Band Tool
601-122

Shell Size	Pre-Coiled Micro Band Part No.	Pre-Coiled Slim Micro Band Part No.	Length in	Length mm	Max Diameter in	Max Diameter mm
9 - 13	601-061	601-601	8.125	206	.88	22.4
15 - 25	601-065	601-603	14.25	362	1.88	47.8

© 2022 Glenair, Inc • 1211 Air Way, Glendale, CA 91201 • 818-247-6000 • www.glenair.com • U.S. CAGE code 06324 • SuperNine® Catalog
Dimensions in Inches (millimeters) are subject to change without notice.

SuperNine® Backshells and accessories

MIL-DTL-38999 Series III Type

Composite Swing-Arm™ strain relief assembly procedure

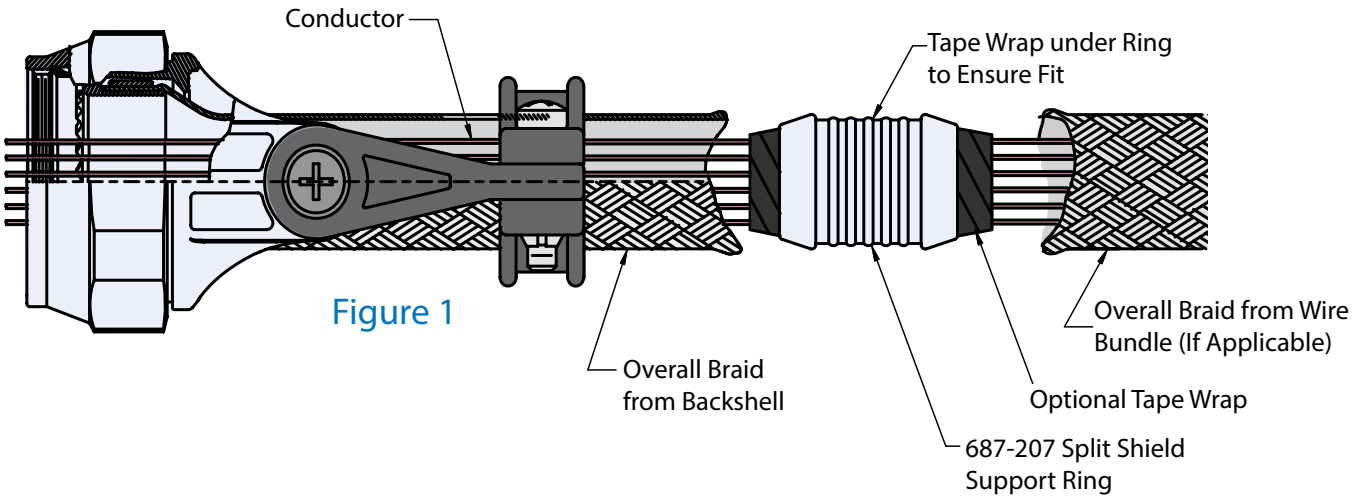

Figure 1

GLENAIR ASSEMBLY PROCEDURE (GAP-029) FOR SWING-ARM, OFFERS EXTREMELY FAST AND TROUBLE-FREE TERMINATION OF EMI SHIELDING:

Choose Straight, 45° or 90° angle, and tighten screws to lock arms in place. Leave the saddle clamp hardware loose.

Next, insert the wire bundle into the backshell to determine if the braid transition angle from the backshell to wire bundle is less than 45°. If it is less than 45°, build up the wire bundle with tape and re-insert wire bundle into backshell to support the transition of overall braid from the backshell to the wire bundle.

Loosely assembly the adapter to the connector and push back the backshell braid. Insert the wire bundle into the adapter and bottom it against the connector. Holding the cable, mark or tag the location where the shield support ring (Glenair Part Number 687-207) will be located. This distance may vary depending on your technique and the flexibility of the wire bundle immediately to the rear of the saddles (Figure 1).

At the marked location, near the shield support ring, wrap tape around wire bundle for snug fit of shield support ring (Figure 1). Tape wrap is optional.

You can then slide the overall braid from the wire bundle side over the shield support ring, trimming braid ends and tucking extra braid underneath itself for a clean appearance.

For pin connectors, slide the backshell forward, and hand tighten backshell to connector. Then, evenly space shield pigtails (Figure 3) or solder sleeve pigtails (Figure 4) around the shield support ring. Cut the pigtails so that the end of the pigtails slightly beyond end of shield support ring.

Bring the shield sock from backshell and completely cover the pigtails and support ring. Trim and fold the braid as shown in Figure 2. Lace tie the shield adjacent to support ring ends.

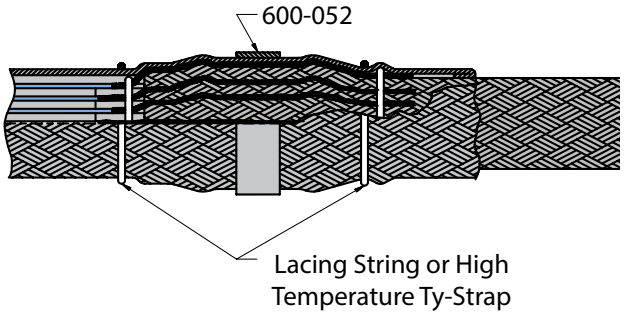

Figure 2

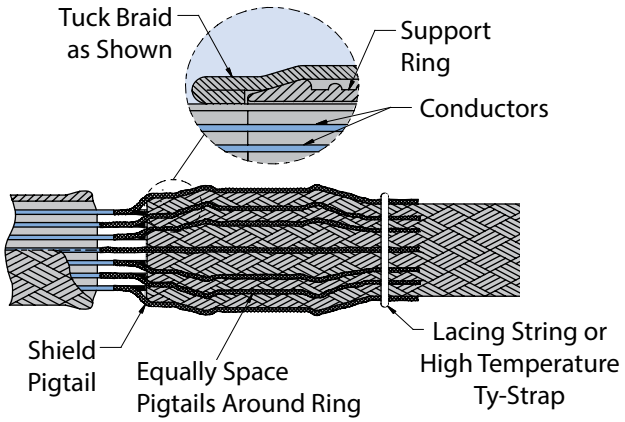

Figure 3

© 2022 Glenair, Inc • 1211 Air Way, Glendale, CA 91201 • 818-247-6000 • www.glenair.com • U.S. CAGE code 06324 • SuperNine® Catalog
Dimensions in Inches (millimeters) are subject to change without notice.

SuperNine® Backshells and accessories

MIL-DTL-38999 Series III Type

Composite Swing-Arm™ strain relief assembly procedure

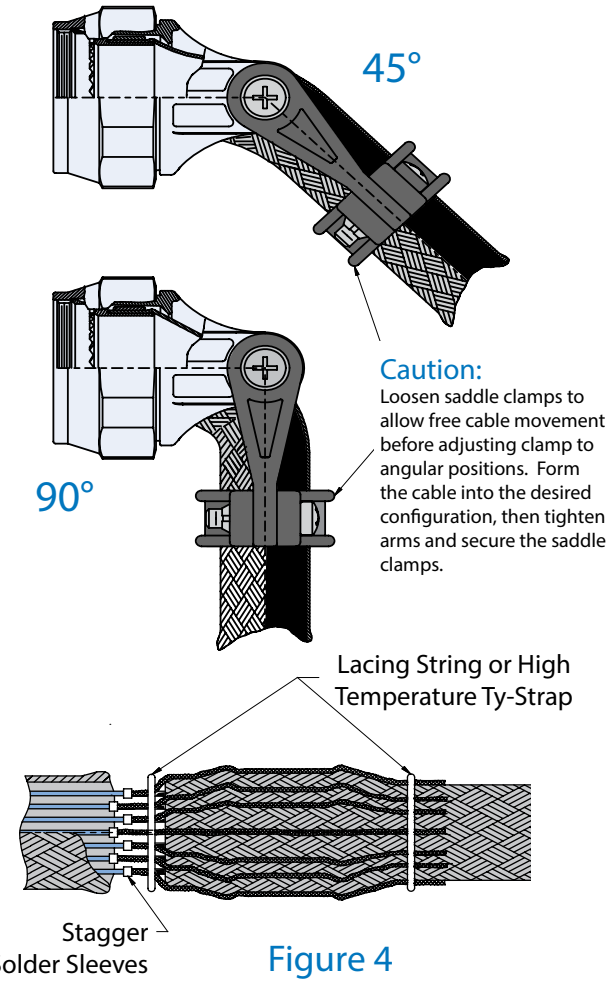

Figure 4

Install Glenair's Band-Master ATS® band between the lace ties onto the center of the support ring as shown in Figure 2. The Band-Master ATS® hand banding tool (601-100) or pneumatic banding tool (601-104) is used for this banding process.

Next, you can wrap the shield support ring assembly with high temperature tape. Place lacing cord, high temperature tape, or high temperature plastic Ty-Straps on the braid transition to the rear of the backshell to secure the overbraid on wire bundle. If you wish, you can cover the overbraid with 102-080 braid sock.

Tighten the adapter to the connector using Glenair 600-091 composite hex coupling torque wrench and related tooling accessories to established torque values. Secure the strain relief saddle onto the wire bundle using TG69 soft jaw pliers. Torque the saddle screws to established values. You can use Fluoropolymer tape wrap or M85049/127 bushing strip as needed to cushion the braid sock under the saddle clamps.

With these few steps, your Swing-Arm strain relief installation is complete!

687-749 BANDING SPLIT-RING

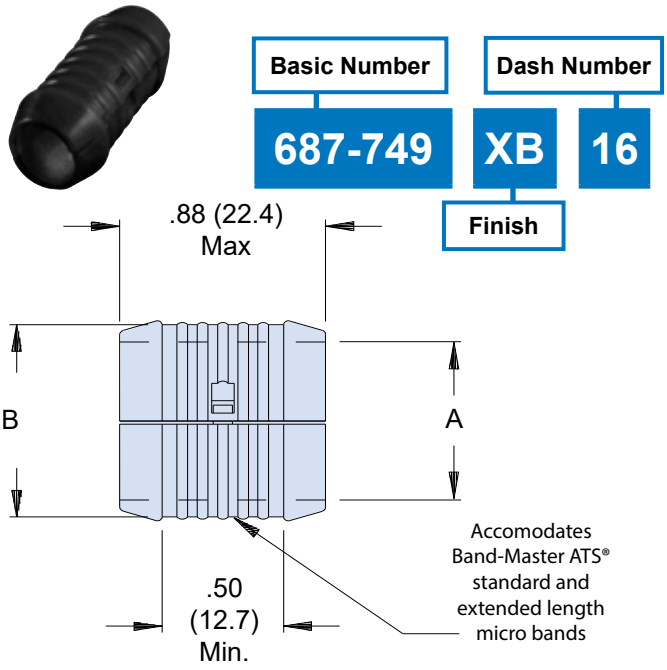

Dash Number		
Dash No.	A Ø ±.03 (0.8)	B Ø ±.03 (0.8)
04	.25 (6.4)	.36 (9.1)
06	.38 (9.7)	.49 (12.4)
08	.50 (12.7)	.61 (15.5)
10	.63 (16.0)	.74 (18.8)
12	.75 (19.1)	.86 (21.8)
14	.88 (22.4)	.99 (25.1)
16	1.00 (25.4)	1.10 (27.9)
18	1.13 (28.7)	1.24 (31.5)
20	1.25 (31.8)	1.36 (34.5)
22	1.38 (35.1)	1.49 (37.8)
24	1.50 (38.1)	1.61 (40.9)
26	1.63 (41.4)	1.74 (44.2)
28	1.75 (44.5)	1.86 (47.2)

Band-Master ATS®



For Band-Master ATS® banding tools, bands, and accessories, see page J-11 of this catalog, or visit **glenair.com**



© 2022 Glenair, Inc • 1211 Air Way, Glendale, CA 91201 • 818-247-6000 • www.glenair.com • U.S. CAGE code 06324 • SuperNine® Catalog
Dimensions in Inches (millimeters) are subject to change without notice.

SuperNine® ProSeal™ environmental MIL-DTL-38999 Series III Type connector covers

Threaded closure seal, full environmental

667-448 PROSEAL PROTECTIVE COVER FOR D38999 SERIES III CONNECTORS



How to Order 667-448						
Sample Part Number		**667-448**	**NF**	**17**	**T1**	**J**
Series	ProSeal protective cover for D38999 Series III connectors					
Material / Finish	See Table II					
Shell Size	See Table I					
Panel Thickness	See Table III					
Type of Mounting	**J** = Jam Nut Mount Receptacle **W** = Wall Mount Receptacle					

- **Threaded closure**
- **Full environmental protection**
- **Self-aligning**
- **Positive spring-action in closed position. Locks open at approximately 105° from receptacle face.**

Wall mount, shown closed

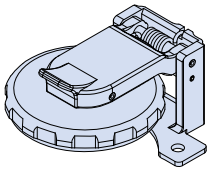

Jam nut mount, shown open

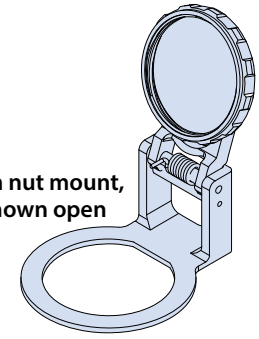

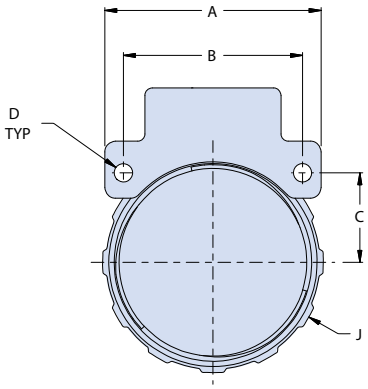

WALL MOUNT

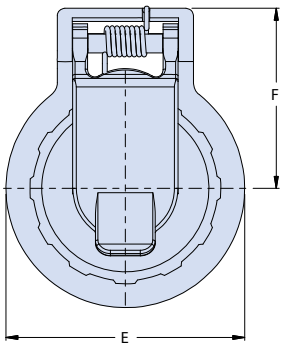

JAM NUT

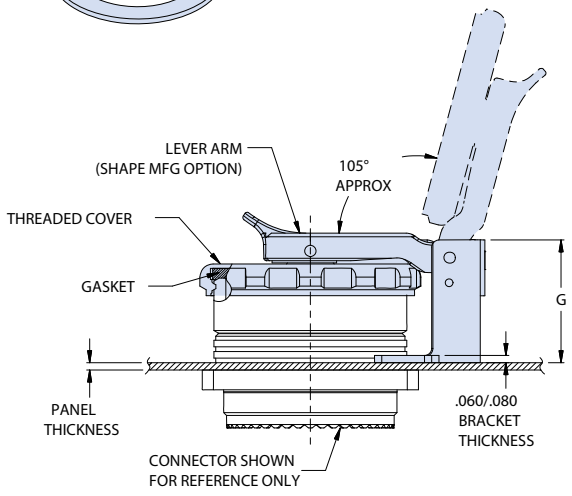

MATERIAL / FINISH

Cover, Lever Arm, Gimbal - Thermoplastic / Black
Bracket - see Table II
Spring / Pin / Rivet - 300 Series SST / Passivate
Sleeve - Delrin
Gasket - Silicone (optional)

© 2022 Glenair, Inc • 1211 Air Way, Glendale, CA 91201 • 818-247-6000 • www.glenair.com • U.S. CAGE code 06324 • SuperNine® Catalog
Dimensions in Inches (millimeters) are subject to change without notice.

SuperNine® ProSeal™ environmental MIL-DTL-38999 Series III Type connector covers

Threaded closure seal, full environmental

Table I: Dimensions

Shell Size	A Dim max		B Dim		C Dim		D ±.008 (.20)		E ±.031 (.79)		F Dim max		J Dia max	
	in	mm	in	mm	in	mm	in	mm	in	mm	in	mm	in	mm
09	0.937	23.80	0.719	18.26	0.360	9.14	0.128	3.25	1.031	26.19	.913	23.19	.872	22.15
11	1.031	26.19	0.812	20.62	0.406	10.31	0.128	3.25	1.125	28.58	.961	24.41	.988	25.10
13	1.126	28.60	0.906	23.01	0.453	11.51	0.128	3.25	1.375	34.93	1.083	27.51	1.129	28.68
15	1.220	30.99	0.969	24.61	0.485	12.32	0.128	3.25	1.560	39.62	1.178	29.92	1.280	32.51
17	1.311	33.30	1.062	26.97	0.531	13.49	0.128	3.25	1.625	41.28	1.211	30.76	1.441	36.60
19	1.437	36.50	1.156	29.36	0.578	14.68	0.128	3.25	1.750	44.45	1.273	32.33	1.499	38.07
21	1.563	39.70	1.250	31.75	0.625	15.88	0.128	3.25	2.000	50.80	1.538	39.07	1.630	41.40
23	1.689	42.90	1.375	34.93	0.688	17.48	0.154	3.91	2.150	54.61	1.614	41.00	1.755	44.58
25	1.841	46.76	1.500	38.10	0.750	19.05	0.154	3.91	2.218	56.34	1.647	41.83	1.880	47.75

Table II: Material and Finish

Sym	Material	Finish
MT	Aluminum	Nickel-PTFE
ZR		Zinc-Nickel, Black (Tri-Valent CR)
M		Electroless Nickel
NF		Cad Plate / Olive Drab over Electroless Nickel
C		Anodize / Black
UC		Zinc Cobalt / Black

Table III: Panel Thickness

Dash No.	Panel Thickness* ±.030 (.76)		Shell Size	G ± .06			
				Jam Nut Mount		Wall Mount	
	in	mm		in	mm	in	mm
T0	.000	.00	09-19	N/A	N/A	1.039	26.39
			21-25	N/A	N/A	1.094	27.79
T1	.062	1.57	09-19	1.041	26.44	0.977	24.82
			21-25	1.126	28.60	1.032	26.21
T2	.125	3.18	09-19	0.979	24.87	0.915	23.24
			21-25	1.064	27.03	0.970	24.64

*Jam nut mount is not available with panel thickness T0

© 2022 Glenair, Inc • 1211 Air Way, Glendale, CA 91201 • 818-247-6000 • www.glenair.com • U.S. CAGE code 06324 • SuperNine® Catalog
Dimensions in Inches (millimeters) are subject to change without notice.

SuperNine® ProSeal™ environmental MIL-DTL-38999 Series III Type connector covers

Pressure seal, dust and immersion resistant

667-449 PROSEAL PROTECTIVE COVER FOR D38999 SERIES III CONNECTORS



How to Order 667-449						
Sample Part Number		**667-449**	**NF**	**17**	**T1**	**J**
Series	ProSeal protective cover for D38999 Series III connectors					
Material / Finish	See Table II					
Shell Size	See Table I					
Panel Thickness	See Table III					
Type of Mounting	**J** = Jam Nut Mount Receptacle **W** = Wall Mount Receptacle					

- **Pressure seal, dust and immersion resistant**
- **Self-aligning**
- **Positive spring-action in closed position. Locks open at approximately 105° from receptacle face.**

Wall mount, shown closed

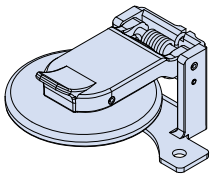

Jam nut mount, shown open

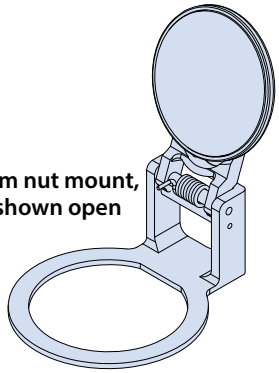

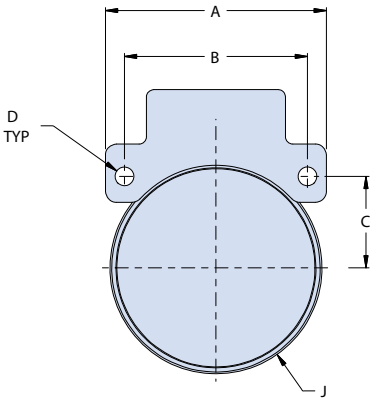

WALL MOUNT

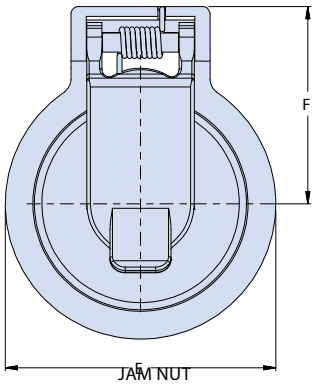

JAM NUT

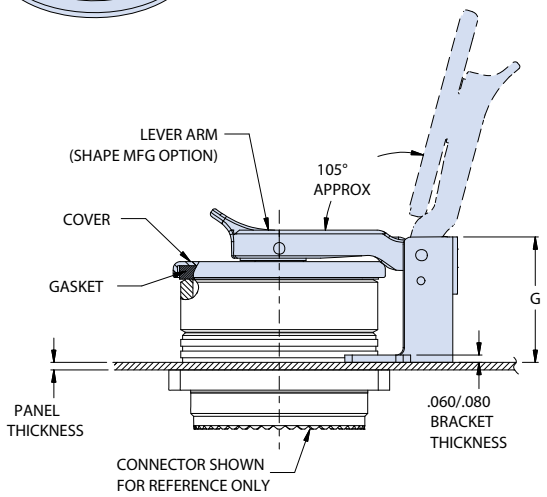

MATERIAL / FINISH

Cover, Lever Arm, Gimbal - Thermoplastic / Black
Bracket - see Table II
Spring / Pin / Rivet - 300 Series SST / Passivate
Sleeve - Delrin
Gasket - Silicone (optional)

© 2022 Glenair, Inc • 1211 Air Way, Glendale, CA 91201 • 818-247-6000 • www.glenair.com • U.S. CAGE code 06324 • SuperNine® Catalog
Dimensions in Inches (millimeters) are subject to change without notice.

SuperNine® ProSeal™ environmental MIL-DTL-38999 Series III Type connector covers

Pressure seal, dust and immersion resistant

Table I: Dimensions

Shell Size	A Dim max		B Dim		C Dim		D ±.008 (.20)		E ±.031 (.79)		F Dim max		J Dia max	
	in	mm	in	mm	in	mm	in	mm	in	mm	in	mm	in	mm
09	0.937	23.80	0.719	18.26	0.360	9.14	0.128	3.25	1.031	26.19	.913	23.19	.735	18.67
11	1.031	26.19	0.812	20.62	0.406	10.31	0.128	3.25	1.125	28.58	.961	24.41	.860	21.84
13	1.126	28.60	0.906	23.01	0.453	11.51	0.128	3.25	1.375	34.93	1.083	27.51	.985	25.02
15	1.220	30.99	0.969	24.61	0.485	12.32	0.128	3.25	1.560	39.62	1.178	29.92	1.120	28.45
17	1.311	33.30	1.062	26.97	0.531	13.49	0.128	3.25	1.625	41.28	1.211	30.76	1.280	32.51
19	1.437	36.50	1.156	29.36	0.578	14.68	0.128	3.25	1.750	44.45	1.273	32.33	1.343	34.11
21	1.563	39.70	1.250	31.75	0.625	15.88	0.128	3.25	2.000	50.80	1.538	39.07	1.466	37.24
23	1.689	42.90	1.375	34.93	0.688	17.48	0.154	3.91	2.150	54.61	1.614	41.00	1.593	40.46
25	1.841	46.76	1.500	38.10	0.750	19.05	0.154	3.91	2.218	56.34	1.647	41.83	1.718	43.64

Table II: Material and Finish

Sym	Material	Finish
MT	Aluminum	Nickel-PTFE
ZR		Zinc-Nickel, Black (Tri-Valent CR)
M		Electroless Nickel
NF		Cad Plate / Olive Drab over Electroless Nickel
C		Anodize / Black
UC		Zinc Cobalt / Black

Table III: Panel Thickness

Dash No.	Panel Thickness* ±.030 (.76)		Shell Size	G ± .06			
				Jam Nut Mount		Wall Mount	
	in	mm		in	mm	in	mm
T0	.000	.00	09-19	N/A	N/A	1.039	26.39
			21-25	N/A	N/A	1.094	27.79
T1	.062	1.57	09-19	1.041	26.44	0.977	24.82
			21-25	1.126	28.60	1.032	26.21
T2	.125	3.18	09-19	0.979	24.87	0.915	23.24
			21-25	1.064	27.03	0.970	24.64

*Jam nut mount is not available with panel thickness T0

© 2022 Glenair, Inc • 1211 Air Way, Glendale, CA 91201 • 818-247-6000 • www.glenair.com • U.S. CAGE code 06324 • SuperNine® Catalog
Dimensions in Inches (millimeters) are subject to change without notice.

ADVANCED PERFORMANCE

SuperNine® Backshells and accessories

MIL-DTL-38999 Series III Type

660-049 and -050 Composite protective covers

Part Number Development						
Sample Part Number	660-049	XM	21	R	6	-04
Product Series-Basic No.	**660-049** = Plug cover **660-050** = Receptacle cover					
Finish	**XB** = No plating, black **XV** = No Plating, purple **XM** = Electroless nickel **XO** = No Plating, non-conductive, brown **XMT** = Nickel-PTFE *1000 Hour Gray* **XW** = Cadmium O/D over electroless nickel (1000 hour salt spray)					
Connector Shell Size	See Dimensions Table					
Lanyard Type	See Lanyard Code Table					
Attachment Length	In inches; i.e. 1=1 inch					
Ring Style Dash No.	See Tables I, II, III					



Composite

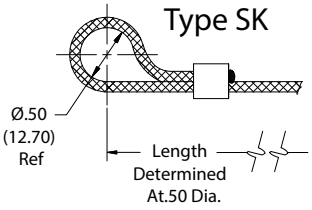

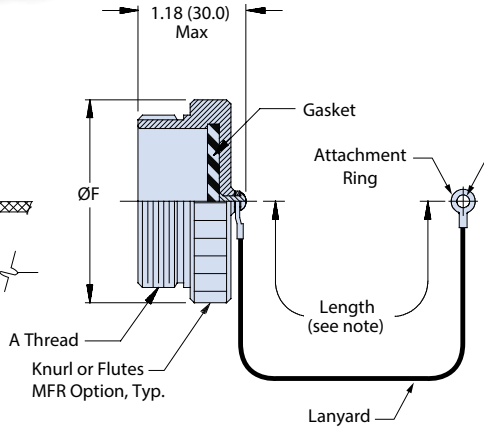

-049 Plug Cover
MIL-DTL-38999/32 Type

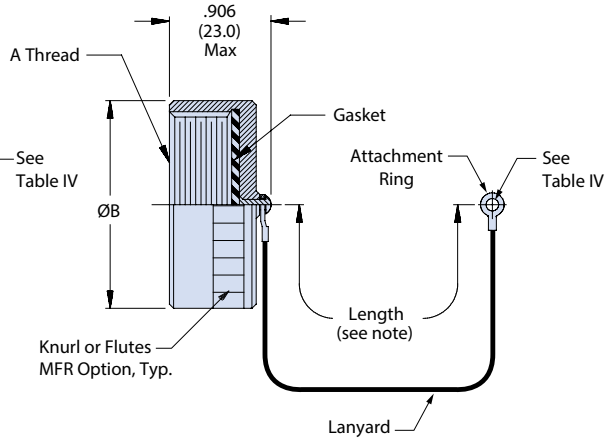

-050 Receptacle Cover
MIL-DTL-38999/33 Type

Dimensions			
Shell Size	A Thread 0.1P-0.3L-TS	Plug Cover ØB Max	Receptacle Cover ØB Max
09	.6250	0.906 (23.0)	.906 (23.0)
11	.7500	1.024 (26.0)	1.102 (28.0)
13	.8750	1.220 (31.0)	1.220 (31.0)
15	1.0000	1.300 (33.0)	1.260 (32.0)
17	1.1875	1.457 (37.0)	1.457 (37.0)
19	1.2500	1.575 (40.0)	1.535 (39.0)
21	1.3750	1.732 (44.0)	1.654 (42.0)
23	1.5000	1.811 (46.0)	1.772 (45.0)
25	1.6250	1.969 (50.0)	1.929 (49.0)

Lanyard Code	
Code	Description
D	Bead Chain, CRES, Passivated
F	Wire Rope, Nylon Jacket
G	Nylon Rope, Black
H	Wire Rope, Fluoropolymer Jacket
K	Nylon Rope, Olive Drab
N	No Lanyard
R	Wire Rope, PVC Jacket
S	#8 Sash Chain, CRES, Passivated
T	Wire Rope, No Jacket
U	Wire Rope, Polyurethane Jacket with terminal
SK	Nylon Rope (Black) w/Slip Knot

NOTES

1. Max diameter over which mandrel will rotate freely
2. Material/finish
   - Cover: thermoplastic polythermides; see part number development, finish
   - Gasket: fluorosilicone/N.A.
   - Hardware, rivet: CRES/passivate
   - Rope lanyard: see lanyard code table

© 2022 Glenair, Inc • 1211 Air Way, Glendale, CA 91201 • 818-247-6000 • www.glenair.com • U.S. CAGE code 06324 • SuperNine® Catalog
Dimensions in Inches (millimeters) are subject to change without notice.

SuperNine® Backshells and accessories

MIL-DTL-38999 Series III Type

660-049 and -050 Composite protective covers

Available Lanyard Types		
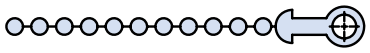	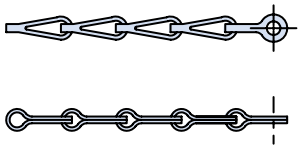	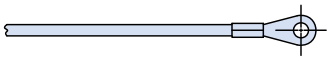
Bead Chain (Type D)	Sash Chain (Type S)	Wire or Nylon Rope (Types F, G, H, K, R, T, U)

SPLIT RING

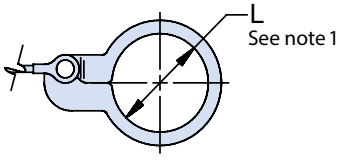

Table I	
Dash No	L Dia ±.015 (0.4)
50	.425 (10.8)
52	.485 (12.3)
54	.640 (16.3)
56	.750 (19.1)
58	.890 (22.6)
60	1.015 (25.8)
62	1.095 (27.8)
64	1.130 (28.7)
66	1.250 (31.8)
68	1.350 (34.3)
70	1.375 (34.92)
72	1.485 (37.7)
74	1.625 (41.3)
76	1.750 (44.5)
78	1.875 (47.6)
80	1.980 (50.3)
82	2.060 (52.3)
84	2.235 (56.8)
86	2.310 (58.7)
88	2.475 (62.9)
90	2.655 (67.4)
92	2.810 (71.4)
94	3.045 (77.3)

SOLID RING

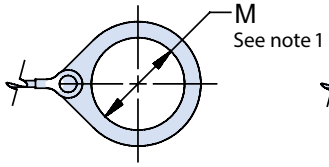

Table II	
Dash No	M Dia ±.015 (0.4)
08	.468 (11.9)
10	.593 (15.1)
12	.718 (18.2)
13	.765 (19.4)
14	.844 (21.4)
15	.890 (22.6)
16	.968 (24.6)
17	1.015 (25.8)
18	1.093 (27.8)
19	1.140 (29.0)
20	1.187 (30.15)
21	1.265 (32.1)
22	1.343 (34.1)
23	1.453 (36.9)
24	1.484 (37.7)
25	1.577 (40.1)
27	1.640 (41.7)
28	1.687 (42.8)
29	1.765 (44.8)
30	1.890 (48.0)
31	1.953 (49.6)
32	1.968 (50.0)
33	2.077 (52.8)
35	2.140 (54.4)
36	2.187 (55.5)
40	2.406 (61.1)
44	2.656 (67.5)
48	3.031 (77.0)

SOLID RING

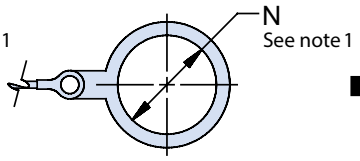

Table III	
Dash No	N Dia ±.015 (0.4)
100	.391 (9.9)
101	.516 (13.1)
102	.583 (14.8)
103	.641 (16.3)
104	.708 (18.0)
105	.766 (19.5)
205	.788 (20.0)
106	.896 (22.2)
206	.907 (23.0)
107	1.016 (25.8)
207	1.025 (26.0)
108	1.141 (29.0)
308	1.188 (30.18)
208	1.203 (30.6)
109	1.266 (32.2)
209	1.312 (33.32)
110	1.391 (35.3)
210	1.438 (36.53)
111	1.521 (38.63)
211	1.536 (39.01)
112	1.641 (41.68)
113	1.766 (44.86)
213	1.812 (46.02)
114	1.891 (48.03)
214	1.938 (49.23)
115	2.078 (52.78)
116	2.406 (61.11)
117	2.510 (63.75)

ATTACHMENT RING

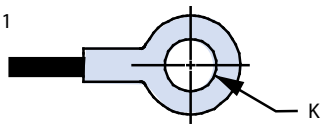

Table IV	
Dash No	K Dia ±.010 (0.25)
01	.140 (3.56)
02	.182 (4.62)
03	.191 (4.85)
04	.197 (5.00)
05	.167 (4.24)
06	.125 (3.18)
07	.218 (5.54)
09	.156 (3.96)

© 2022 Glenair, Inc • 1211 Air Way, Glendale, CA 91201 • 818-247-6000 • www.glenair.com • U.S. CAGE code 06324 • SuperNine® Catalog
Dimensions in Inches (millimeters) are subject to change without notice.

SuperNine® Backshells and accessories

MIL-DTL-38999 Series III Type

239-200 Plug cover for 233-215 piston-sealed plug

Part Number Development						
Sample Part Number	239-200	NF	17	H	5	–17
Product Series-Basic No.	Plug cover for SuperNine piston-seal connector					
Finish	**ME, MT, NF, ZR, TD, TP3, Z1, ZL, AB**; See Material/Finish Table					
Connector Shell Size	**09, 11, 13, 15, 17, 19, 21, 23, 25**; See Dimensions Table					
Attachment Type	**D, F, G, H, K, N, R, S, T, U**; See Lanyard Codes Table					
Attachment Length	Inches; i.e. **17** = 17 inches. Sash chain is ±1 link, all other attachments ±0.25					
Ring Style Dash No.	See Table I					

Material/Finish		
Sym	**Material / Finish Description**	**RoHS**
ME	Aluminum/Electroless nickel	☑
MT	Aluminum/Ni-PTFE 500 hour nickel fluorocarbon polymer	☑
NF	Aluminum/Cadmium O.D. over electroless nickel	☒
ZR	Aluminum/Black zinc-nickel (tri-valent CR)	☑
TD	Titanium/Natural, unplated	☑
TP3	Titanium Electro-deposited nickel	☑
Z1	SST/Passivate	☑
ZL	SST/electrodeposited nickel	☑
AB	Marine Bronze/Unplated	☑

Dimensions		
Shell Size	**A Thread 0.1P-0.3L-TS**	**Ø B Max**
09	.6250	.858 (21.8)
11	.7500	.984 (25.0)
13	.8750	1.157 (29.4)
15	1.0000	1.280 (32.5)
17	1.1875	1.406 (35.7)
19	1.2500	1.516 (38.5)
21	1.3750	1.642 (41.7)
23	1.5000	1.768 (44.9)
25	1.6250	1.890 (48.0)

Attachment Codes	
Code	**Description**
D	Bead chain, cres, passivated
F	Wire rope, nylon jacket with terminal
G	Nylon rope, black with looped ends
H	Wire rope, fluoropolymer jacket with terminal
K	Nylon rope (olive drab)
N	No attachment
R	Wire rope, PVC jacket with terminal
S	#8 Sash chain, CRES, passivated
T	Wire rope, no jacket with terminal
U	Wire rope, polyurethane with jacket

Table I	
Dash No	**ØC Dia ±.015 (0.4)**
08	.468 (11.9)
10	.593 (15.1)
12	.718 (18.2)
13	.765 (19.4)
14	.844 (21.4)
15	.890 (22.6)
16	.968 (24.6)
17	1.015 (25.8)
18	1.093 (27.8)
19	1.140 (29.0)
20	1.203 (30.6)
21	1.265 (32.1)
22	1.343 (34.1)
23	1.453 (36.9)
24	1.484 (37.7)
25	1.577 (40.1)
27	1.640 (41.7)
28	1.687 (42.8)
29	1.765 (44.8)
30	1.890 (48.0)
31	1.953 (49.6)
32	1.968 (50.0)
33	2.077 (52.8)
35	2.140 (54.4)
36	2.187 (55.5)
40	2.406 (61.1)
44	2.656 (67.5)
48	3.031 (77.0)

Available Lanyard Types (shown with eyelet attachment)
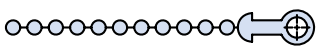
Bead Chain (Type D)
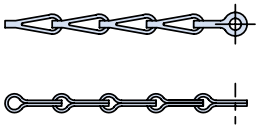
Sash Chain (Type S)

Rope (Types F, G, H, K, R, T, U)

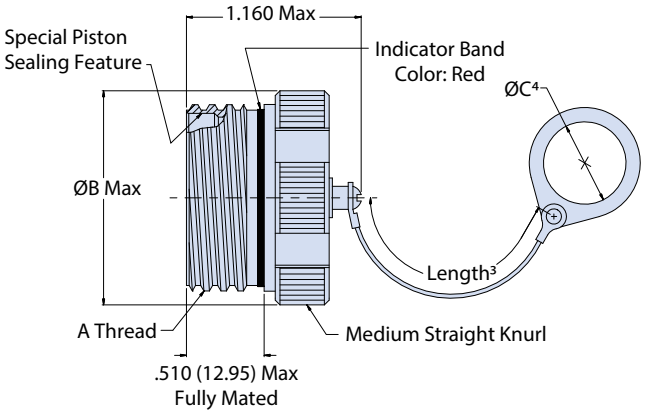

NOTES

1. Material/Finish: Hardware, Rivet - CRES/Passivate
2. 239-200 plug cover is designed to meet or exceed the appropriate mechanical, dimensional, and environmental requirements of MIL-DTL-38999 Series III except as shown or noted. Plug cover is for use with 233-215 piston-sealed connector series.
3. Length tolerance for sash chain (S) is ± one link, for all other attachments ±.25
4. Diameter C is maximum mandrel dia. which attachment will rotate freely over

© 2022 Glenair, Inc • 1211 Air Way, Glendale, CA 91201 • 818-247-6000 • www.glenair.com • U.S. CAGE code 06324 • SuperNine® Catalog
Dimensions in Inches (millimeters) are subject to change without notice.

SuperNine® Backshells and accessories

MIL-DTL-38999 Series III Type

660-121 Composite self locking receptacle cover

Part Number Development							
Sample Part Number	660-121	XB	19	R	6	-01	G
Product Series-Basic No.	Self locking receptacle cover						
Finish	**XW**, **XB**, **XM**, **XMT**; See material/finish table						
Shell Size	**09**, **11**, **13**, **15**, **17**, **19**, **21**, **23**, **25**; see dimensions table						
Attachment Type	**F**, **G**, **H**, **K**, **N**, **R**, **T**; See attachment code table						
Attachment Length	Inches; i.e. **01** = 1 inch						
Ring Style Dash No.	See ring style tables A, B, C or D						
Grounding	**G** = Ground Spring; Omit for none						

Material/Finish	
Sym	**Material / Finish Description**
XW	Cad/O.D. over electroless nickel (1000 hr)
XB	Black color-no plating
XM	Electroless nickel (1000 hr)
XMT	Ni-PTFE (1000 hr grey)

Dimensions		
Shell Size	**A Thread 0.1P-0.3L-TS**	**Ø B Max**
09	.6250	.858 (21.8)
11	.7500	.984 (25.0)
13	.8750	1.157 (29.4)
15	1.0000	1.279 (32.49)
17	1.1875	1.405 (35.69)
19	1.2500	1.515 (38.48)
21	1.3750	1.641 (41.68)
23	1.5000	1.767 (44.88)
25	1.6250	1.889 (47.98)

Attachment Codes	
Code	**Description**
F	Wire Rope, Nylon Jacket with terminal
G	Nylon Rope, Black, with looped end
H	Wire Rope, Fluoropolymer Jacket with terminal
K	Nylon Rope, Olive Drab
N	No attachment
R	Wire Rope, PVC Jacket with attachment
T	Wire Rope, No Jacket with attachment

NOTES

1. Max diameter over which mandrel will rotate freely

Ring Style A	
Dash No	**C Dia**
100	.391 (9.93)
101	.516 (13.11)
102	.583 (14.81)
103	.641 (16.28)
104	.708 (17.98)
105	.766 (19.46)
106	.896 (22.76)
107	1.016 (25.81)
108	1.141 (28.98)
109	1.266 (32.16)
110	1.391 (35.33)
111	1.521 (38.63)
112	1.641 (41.68)
113	1.766 (44.86)
114	1.891 (48.03)
115	2.078 (52.78)
116	2.406 (61.11)
117	2.510 (63.75)
206	.907 (23.04)
208	1.203 (30.56)

Ring Style B	
Dash No	**D Dia**
08	.468 (11.89)
10	.593 (15.06)
12	.718 (18.24)
14	.844 (21.44)
16	.968 (24.59)
18	1.093 (27.76)
20	1.187 (30.15)
22	1.343 (34.11)
24	1.484 (37.69)
28	1.687 (42.85)
32	1.968 (49.99)
36	2.187 (55.55)
40	2.406 (61.11)
44	2.656 (67.46)
48	3.031 (76.99)

Ring Style C	
Dash No	**E Dia**
50	.425 (10.80)
52	.485 (12.32)
54	.640 (16.26)
56	.750 (19.05)
58	.890 (22.61)
60	1.015 (25.78)
62	1.095 (27.81)
64	1.130 (28.70)
66	1.250 (31.75)
68	1.350 (34.29)
70	1.3475 (34.23)
72	1.485 (37.72)
74	1.625 (41.28)
76	1.750 (44.45)
78	1.875 (47.63)
80	1.980 (50.29)
82	2.060 (52.32)
84	2.235 (56.77)
86	2.310 (58.67)
88	2.475 (62.87)
90	2.655 (67.44)
92	2.810 (71.37)
94	3.045 (77.34)

Ring Style D	
Dash No	**F Dia**
01	.140 (3.56)
02	.182 (4.62)
03	.191 (4.85)
04	.197 (5.00)
05	.167 (4.24)
06	.125 (3.18)

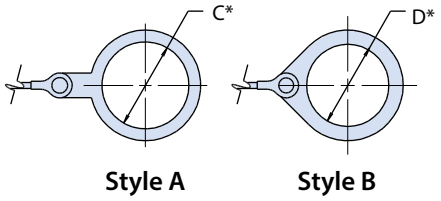

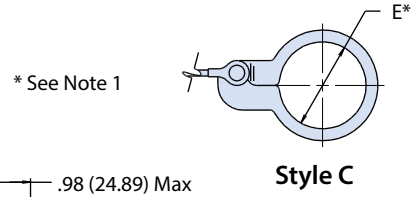

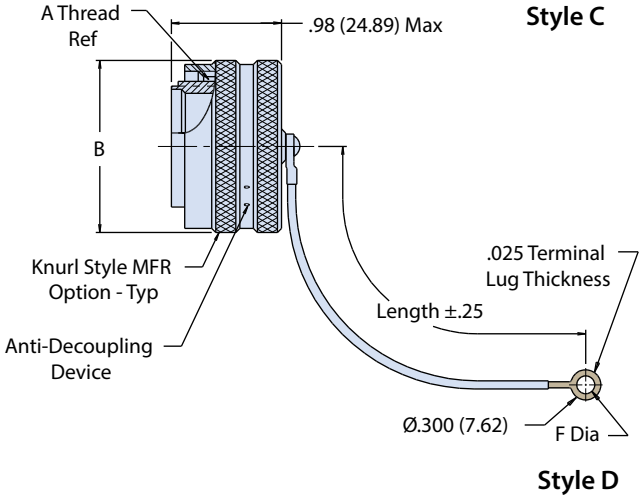

© 2022 Glenair, Inc • 1211 Air Way, Glendale, CA 91201 • 818-247-6000 • www.glenair.com • U.S. CAGE code 06324 • SuperNine® Catalog
Dimensions in Inches (millimeters) are subject to change without notice.

SuperNine® Backshells and accessories

MIL-DTL-38999 Series III Type

239-202 Thick jam nut for .125" panel

How to Order 239-202				
Sample Part Number		**239-202**	**ME**	**11**
Series	Replacement Jam Nut for .125" panels			
Material / Finish	See Table II			
Dash No.	See Table I			

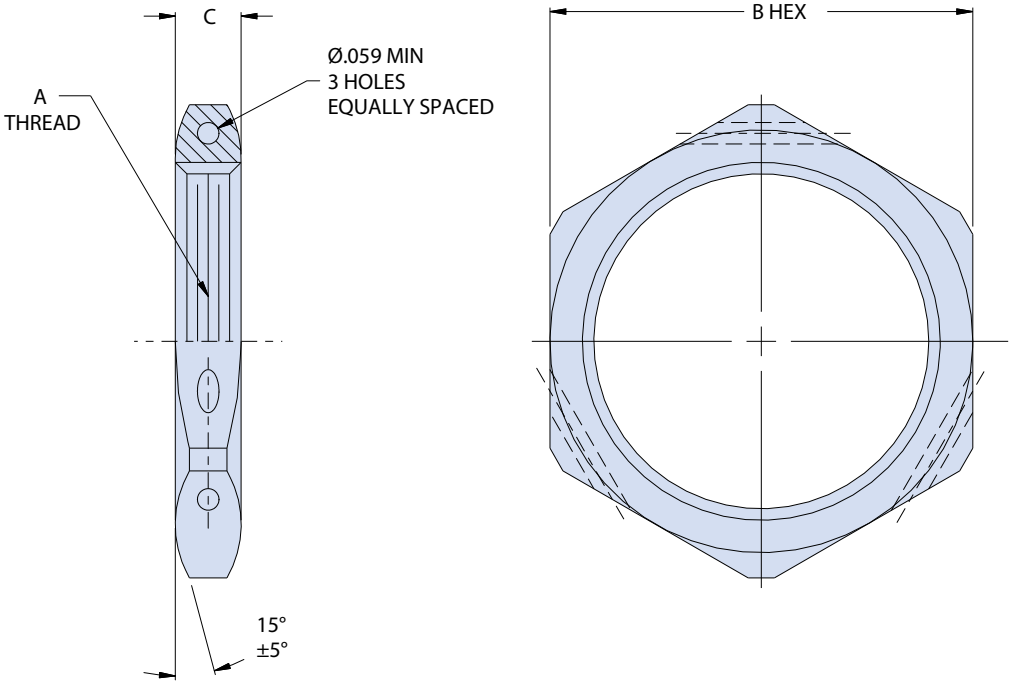

Table II: Material and Finish		
Sym	**Material**	**Finish**
ME	Aluminum Alloy	Electroless Nickel
MT		Nickel-PTFE
NF		Cad Plate / Olive Drab over Electroless Nickel
ZR		Zinc-Nickel, Black (Tri-Valent CR)

Table I: Dimensions						
Dash No.	**Shell Size**	**A Thread Isometiric**	**B Hex Max**		**C +.011 -.000**	
			in	**mm**	**In**	**mm**
9	**9**	M17 X 1.0 - 6H	.945	24.0	.179	4.5
11	**11**	M20 X 1.0 - 6H	1.063	27.0		
13	**13**	M25 X 1.0 - 6H	1.260	32.0		
15	**15**	M28 X 1.0 - 6H	1.417	36.0		
17	**17**	M32 X 1.0 - 6H	1.457	37.0		
19	**19**	M35 X 1.0 - 6H	1.614	41.0		
21	**21**	M38 X 1.0 - 6H	1.811	46.0		
23	**23**	M41 X 1.0 - 6H	1.969	50.0		
25	**25**	M44 X 1.0 - 6H	2.017	51.2		

© 2022 Glenair, Inc • 1211 Air Way, Glendale, CA 91201 • 818-247-6000 • www.glenair.com • U.S. CAGE code 06324 • SuperNine® Catalog
Dimensions in Inches (millimeters) are subject to change without notice.

SuperNine® Backshells and accessories

MIL-DTL-38999 Series III Type

239-204 Flange gasket for wall-mount receptacles

How to Order 239-204				
Sample Part Number		**239-204**	**09**	**H**
Series	Flange gasket			
Dash No.	See Table II			
Material	See Table I			

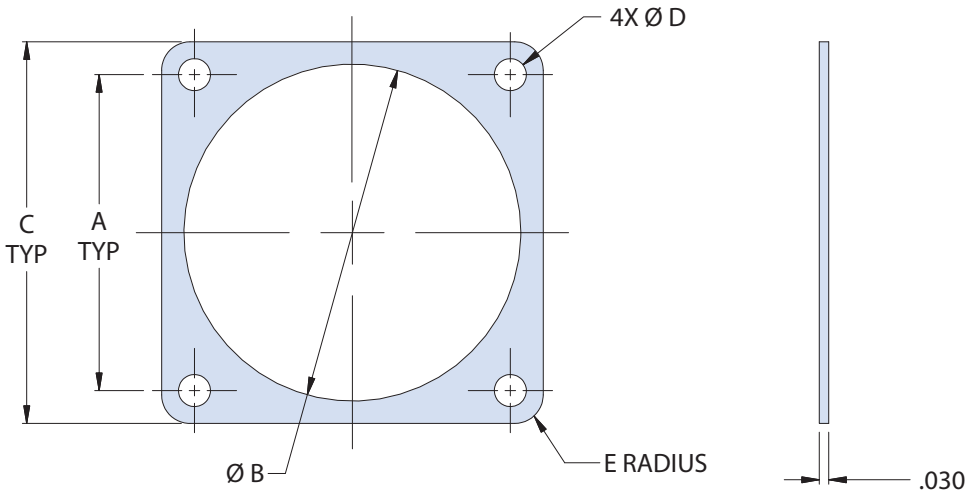

Table I: Material

Sym	Material
B	Silver-plated aluminum-filled silicone per MIL-DTL-83528, Type "B" (CHO-Seal 1285 or equivalent)
C	Passivated silver-plated aluminum-filled fluorosilicone per MIL-DTL-83528, Type "D" (CHO-Seal 1298 or equivalent)
D	Nickel-coated graphite-filled silicone (CHO-Seal S6305 or equivalent)
E	Nickel-plated graphite-filled EPDM (CHO-Seal 6307 or equivalent)
F	Fluorosilicone
G	Silver-plated nickel-filled EPDM (CHO-Seal 6435 or equivalent)
H	Silver-plated copper-filled silicon per MIL-DTL-83528, Type "A" (CHO-Seal 1215 or equivalent)
J	Nickel-coated graphite-filled fluorosilicone (CHO-Seal L6303)
K	Oriented monel wires in silicone substrate (Chomerics 07-0701 or equivalent)
L	Silicone-filled monel screen cloth or expanded metal (Metex 704-9311 or equivalent)
M	Silver-plated glass-filled silicone (Tecknit Consil-II, Jabar 803-0158 or equivalent)
N	Neoprene
S	Silicone
V	Viton (fluorocarbon)

Table II: Dimensions

Dash No.	A ±.005		B ±.007		C ±.008		ØD ±.005		E Rad. ±.015	
	in	mm	in	mm	in	mm	in	mm	in	mm
-09	.719	18.3	.687	17.4	.937	23.8	.125	3.2	.105	2.7
-11	.812	20.6	.772	19.6	1.031	26.2	.125	3.2	.105	2.7
-13	.906	23.0	.937	23.8	1.125	28.6	.125	3.2	.105	2.7
-15	.969	24.6	1.063	27.0	1.250	31.8	.125	3.2	.135	3.4
-17	1.062	27.0	1.187	30.1	1.343	34.1	.125	3.2	.135	3.4
-19	1.156	29.4	1.312	33.3	1.467	37.3	.125	3.2	.135	3.4
-21	1.250	31.8	1.437	36.5	1.562	39.7	.125	3.2	.135	3.4
-23	1.375	34.9	1.562	39.7	1.703	43.3	.152	3.9	.135	3.4
-25	1.500	38.1	1.600	40.6	1.812	46.0	.152	3.9	.135	3.4

© 2022 Glenair, Inc • 1211 Air Way, Glendale, CA 91201 • 818-247-6000 • www.glenair.com • U.S. CAGE code 06324 • SuperNine® Catalog
Dimensions in Inches (millimeters) are subject to change without notice.

Rev. 03.10.23

SuperNine® Backshells and accessories

MIL-DTL-38999 Series III Type

239-205 D38999 O-ring for jam nut receptacle connectors

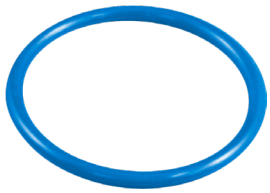

How to Order 239-205					
Sample Part Number		**239-205**	**-09**	**-V**	**2**
Series	Replacement O-ring				
Dash No.	See Table I				
Material	See Table II				
Series Modifier	**2** - Series II D38999 connectors **4** - Series IV D38999 connectors **Omit** - Series I/III D38999 connectors				

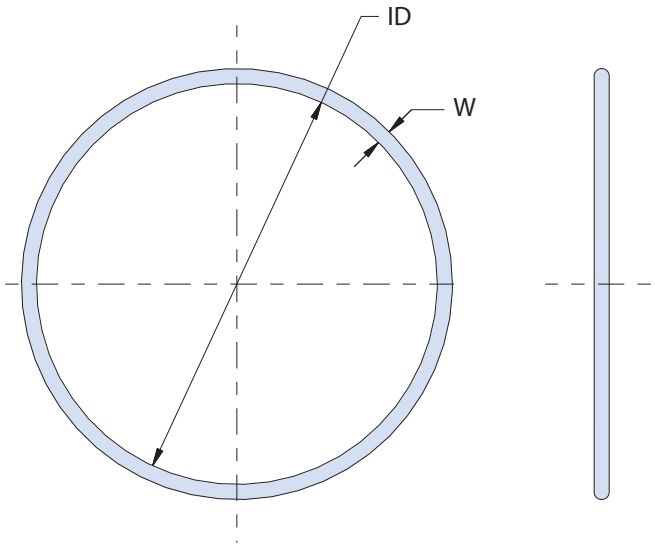

Table I: Dimensions					
D38999 SI & SIII	O-Ring ID X W	D38999, SII	O-Ring ID x W	D38999, SIV	O-Ring ID x W
-09	.801 X .070	**-8**	.989 X .070		
-11	.989 X .070	**-10**	1.114 X .070	**-11**	1.114 X .070
-13	1.114 X .070	**-12**	1.239 X .070	**-13**	1.239 X .070
-15	1.239 X .070	**-14**	1.364 X .070	**-15**	1.364 X .070
-17	1.364 X .070	**-16**	1.489 X .070	**-17**	1.489 X .070
-19	1.487 X .103	**-18**	1.614 X .070	**-19**	1.614 X .070
-21	1.612 X .103	**-20**	1.739 X .070	**-21**	1.739 X .070
-23	1.737 X .103	**-22**	1.864 X .070	**-23**	1.864 X .070
-25	1.862 X .103	**-24**	2.114 X .070	**-25**	1.989 X .070

Table II: Material	
Sym	**Material**
B	Butyl
C	Nitrile (Buna-N)
E	EPDM
F	Fluorosilicone
G	CHO-Seal 6435 or equivalent
H	CHO-Seal 1215 or equivalent
N	Neoprene
P	CHO-Seal 1298 or equivalent
R	CHO-Seal 1285 or equivalent
S	Silicone
T	CHO-Seal 6307 or equivalent
V	Viton
W	Viton VX065-75
Z	FFKM perfluoroelastomer (FF580-75)

© 2022 Glenair, Inc • 1211 Air Way, Glendale, CA 91201 • 818-247-6000 • www.glenair.com • U.S. CAGE code 06324 • SuperNine® Catalog
Dimensions in Inches (millimeters) are subject to change without notice.

Rev. 06.09.23

SuperNine® Backshells and accessories

MIL-DTL-38999 Series III Type

809-531 Hex Jam Nut with Anti-Rotation Feature

HOW TO ORDER			
Sample Part Number	**809-531**	**-M**	**25**
Basic Number	809-531 Hex Jam Nut with Anti-Rotation Feature		
Material/Finish	**C** = Black Anodize Finish, Aluminum **M** = Electroless Nickel, Aluminum **NF** = Olive Drab Cadmium Over Electroless Nickel Finish, Aluminum **ZN** = Zinc-Nickel/O. D. Over Electroless Nickel, Aluminum **Z1** = Passivate, Stainless Steel **ZL** = Electrodeposited Nickel, Stainless Steel		
Shell Size	See Dimensions Table		

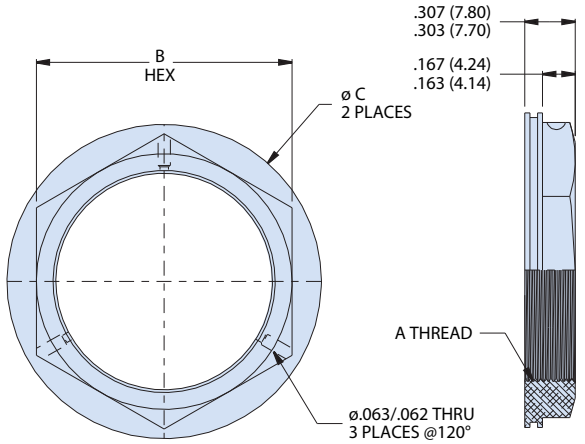

TABLE I					
Shell Size	A Thread Metric 0.100R	ø B		ø C	
		in	mm	in	mm
11	M20 X 1.0-6H	1.000	25.40	1.247	31.67
13	M25 X 1.0-6H	1.188	30.18	1.497	38.02
15	M28 X 1.0-6H	1.312	33.32	1.724	43.79
17	M32 X 1.0-6H	1.438	36.53	1.805	45.85
19	M35 X 1.0-6H	1.562	39.67	1.970	50.04
21	M38 X 1.0-6H	1.688	42.88	2.095	53.21
23	M41 X 1.0-6H	1.812	46.02	2.215	56.26
25	M44 X 1.0-6H	2.000	50.80	2.460	62.48

© 2022 Glenair, Inc • 1211 Air Way, Glendale, CA 91201 • 818-247-6000 • www.glenair.com • U.S. CAGE code 06324 • SuperNine® Catalog
Dimensions in Inches (millimeters) are subject to change without notice.

ADVANCED PERFORMANCE

SuperNine® Contacts

MIL-DTL-38999 Series III Type

Product selection guide

CONTACTS AND TOOLS

	SuperNine Contact, Quick Reference Guide	J-3
	D38999 QPL Crimp Contacts and Commercial Crimp Contacts	J-4
	Extended Durablity (1500 Cycle) D38999 QPL and Commercial Crimp Contacts	J-4
	Extended Durability D38999 QPL and Commercial Equivalent Crimp Contacts	J-4
	#8 High Power Contacts	J-4
	Size #16 Coaxial Contacts	J-5
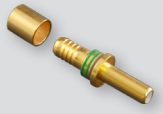	Size #12 Coaxial Contacts	J-6
	Size #12, 75 Ohm Matched Impedance Coaxial Contacts	J-7
	Size #8, 2.5 GHz Max Operating Frequency, 50 Ohm Contacts for Low Loss Coax Cable	J-9
	Size #8, 3 GHz Max Operating Frequency, 50 Ohm Contacts for Coax Cable	J-11
	Size #8, 4 GHz Max Frequency, 75 Ohm Low-Loss, Matched-Impedance Coax Contacts & Cable	J-13
	Size #8 (50Ω and 75Ω) Coaxial Contacts	J-17
	Size #8 Concentric Twinax Contacts	J-19
	Size #8 Differential Twinax Contacts	J-21
	Size #8 Quadrax Contacts	J-26
	Thermocouple Contacts	J-29
	Size #12 Pneumatic Contacts	J-30
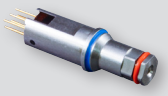	Size 8 Cavity Optoelectronic Contact	J-30
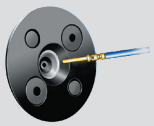	Crimp Contact Termination Instructions	J-31
	Power and Signal Crimp Contact Tool Cross Reference	J-32
	El Ochito® Octaxial "White," "Blue," and "Red" Contacts and Assembly Tools	J-37
	600-280 El Ochito® Contact Termination/Installation Kit	J-41

© 2022 Glenair, Inc • 1211 Air Way, Glendale, CA 91201 • 818-247-6000 • www.glenair.com • U.S. CAGE code 06324 • SuperNine™ Catalog
Dimensions in Inches (millimeters) are subject to change without notice.

SuperNine® Contacts
MIL-DTL-38999 Series III Type
Product selection guide

CONTACTS AND TOOLS



Crimp Tools & Positioners J-42



Contact Insertion and Extraction Tools J-44

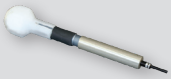

Contact Retention Tester for Size #23 Contacts J-44



Dummy Contact Sealing Plugs (DCSP) J-45



Sealing Plugs J-49



Band-Master ATS® Banding Tool J-50

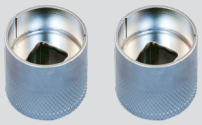

600H005 Connector Holding Tool J-51

© 2022 Glenair, Inc • 1211 Air Way, Glendale, CA 91201 • 818-247-6000 • www.glenair.com • U.S. CAGE code 06324 • SuperNine™ Catalog
Dimensions in Inches (millimeters) are subject to change without notice.

SuperNine® Contacts
MIL-DTL-38999 Series III Type
M39029 and Glenair signature contact solutions

D38999 QPL AND SUPERNINE 233-205 AND 233-206 CONTACT QUICK REFERENCE GUIDE

D38999 QPL				
Size	Pin	Socket	Durability	Mil Spec Gender Designator
23	M39029/122-670	M39029/121-663	500	P or S
22	M39029/58-360	M39029/56-348	500	P or S
20	M39029/58-363	M39029/56-351	500	P or S
16	M39029/58-364	M39029/56-352	500	P or S
12	M39029/58-365	M39029/56-353	500	P or S

/18 and /17 are not used for D38999

Extended Durability D38999 QPL				
Size	Pin	Socket	Durability	Mil Spec Gender Designator
23	No Mil Spec Available	No Mil Spec Available	1500	N/A
22	M39029/107-620	M39029/106-614	1500	H or J
20	M39029/107-621	M39029/106-615	1500	H or J
16	M39029/107-622	M39029/106-616	1500	H or J
12	M39029/107-623	M39029/106-617	1500	H or J

SuperNine 233-205 and 233-206 Extended Durability Connector Contacts				
Size	Pin	Socket	Durability	Gender Designator
23	857-189	857-190	1500	P or S
22	857-151-22	857-150-22	1500	P or S
20	857-151-20	857-150-20	1500	P or S
16	857-151-16	857-150-16	1500	P or S
12	857-151-12	857-150-12	1500	P or S
22	M39029/107-620	M39029/106-614	1500	H or J
20	M39029/107-621	M39029/106-615	1500	H or J
16	M39029/107-622	M39029/106-616	1500	H or J
12	M39029/107-623	M39029/106-617	1500	H or J

D38999 QPL CRIMP CONTACTS (500 CYCLE)



How-To-Order D38999 QPL Qualified Crimp Contacts					
Mating End Size	Wire Accomodation	Pin Contacts		Socket Contacts	
		Military P/N.	Glenair P/N	Military P/N.	Glenair P/N
23	22 - 28 AWG*	M39029/122-670	850-319-23-670	M39029/121-663	850-318-23-663
22	22-28 AWG	M39029/58-360	850-002-22-360	M39029/56-348	850-001-22-348
20	20-24 AWG	M39029/58-363	850-002-20-363	M39029/56-351	850-001-20-351
16	16-20 AWG	M39029/58-364	850-002-16-364	M39029/56-352	850-001-16-352
12	12-14 AWG	M39029/58-365	850-002-12-365	M39029/56-353	850-001-12-353

*26-30 AWG accommodation is available for size 23, consult factory for details

MATERIAL AND FINISH

- Copper alloy, plated; meets AS39029 specifications.
- Rated to 500 cycles of durability for size 23 extended duty see P/N 857-189 and 857-190.

© 2022 Glenair, Inc • 1211 Air Way, Glendale, CA 91201 • 818-247-6000 • www.glenair.com • U.S. CAGE code 06324 • SuperNine™ Catalog
Dimensions in Inches (millimeters) are subject to change without notice.

SuperNine® Contacts
MIL-DTL-38999 Series III Type
M39029 and Glenair signature contact solutions

EXTENDED DURABILITY (1500 CYCLE) D38999 QPL M39029/107 (850-007) H PIN CONTACT OPTION AND M39029/106 (850-006) J SOCKET CONTACT OPTION



How-To-Order Extended Durability Crimp Contacts					
Mating End Size	Wire Accomodation	Pin Contacts Military Part No.	Pin Contacts Glenair Part No.	Socket Contacts Military Part No.	Socket Contacts Glenair Part No.
22	22-28 AWG	M39029/107-620	850-007-22-620	M39029/106-614	850-006-22-614
20	20-24 AWG	M39029/107-621	850-007-20-621	M39029/106-615	850-006-20-615
16	16-20 AWG	M39029/107-622	850-007-16-622	M39029/106-616	850-006-16-616
12	12-14 AWG	M39029/107-623	850-007-12-623	M39029/106-617	850-006-12-617

MATERIAL AND FINISH

- Copper alloy / gold plated; IAW ASTM B 488, Type II, Code C, .000005 min thickness, over palladium IAW ASTM B 679, .000045 min thickness, over nickel IAW SAE ASS-QQ-N290, Class 2, .000050 to .000100 thickness
- Rated to 1500 cycles of durability.
- Size 23 contacts not available for M39029/107, for size 23 extended duty crimp contacts, see part number 857-189 and 857-190.

COMMERCIAL, EXTENDED DURABILITY (1500 CYCLE) CONTACTS FOR SUPERNINE 233-205 AND 233-206 CONNECTORS; AVAILABLE FOR TYPE P AND S CRIMP CONTACT OPTIONS ONLY



How-To-Order Extended Durability Crimp Contacts			
Mating End Size	Wire Accomodation	Pin Contacts Glenair Part No.	Socket Contacts Glenair Part No.
23	22-28 AWG	857-189*	857-190*
22	22-28 AWG	857-151-22	857-150-22
20	20-24 AWG	857-151-20	857-150-20
16	16-20 AWG	857-151-16	857-150-16
12	12-14 AWG	857-151-12	857-150-12

* 857-189 and 857-190 are also used in high-density size 23 insert arrangements

MATERIAL AND FINISH

- Copper alloy, plated; meets AS39029 specifications.
- Rated to 1500 cycles of durability.
- Plated with 50 microinches gold per ASTM B488 Type II code C

#8 HIGH POWER CONTACTS



	How-To-Order #8 High Power Contacts		
Type	Mating End Size	Wire Accommodation	Glenair Part Number
Socket	8	8 AWG	850-013
Pin	8	8 AWG	850-014

MATERIAL AND FINISH

- Contact Body: Copper alloy, plated with 50 microinches gold per ASTM B488 Type II code C
- Hood: CRES, passivated
- 50–100 microinches nickel IAW SAE AMS-QQ-N-290, class II

© 2022 Glenair, Inc • 1211 Air Way, Glendale, CA 91201 • 818-247-6000 • www.glenair.com • U.S. CAGE code 06324 • SuperNine™ Catalog
Dimensions in Inches (millimeters) are subject to change without notice.

SIZE #16 COAXIAL CONTACTS



These #16 contacts accept 50 ohm and 75 ohm coaxial cable. Inner contact is rated at 1 amp, the outer contact 12 amps. DWV rating is 800 Vac rms sea level, 250 Vac at 50,000 feet. Contacts are packaged individually and are unassembled with instruction sheet. One contact consists of outer contact , fluorocarbon dielectric, inner contact and shield crimp sleeve. Inner and outer contacts are gold-plated copper alloy. Approved to SAE AS39029. VSWR rating 1.5:1 maximum up to 700 MHz. 5000 megohm insulation resistance.

How-To-Order Size #16 Coaxial Contacts

Type	Cable Accommodation	Part Number	Military Part Number	Color Band		
				1st	2nd	3rd
Pin	M17/119-RG174, M17/113-RG316, M17/094-RG179, Times AA3248, Teledyne 11299, Haveg 8100207, Thermax 75-738-BCCWXE, Tensolite 3088/L707YX-1	852-008-16-424	M39029/76-424	Yellow	Red	Yellow
	M19/093-RG178	852-008-16-425	M39029/76-425	Yellow	Red	Green
Socket	M17/119-RG174, M17/113-RG316, M17/094-RG179, Times AA3248, Teledyne 11299, Haveg 8100207, Thermax 75-738-BCCWXE, Tensolite 30888/L707YX-1	852-009-16-428	M39029/77-428	Yellow	Red	Gray
	M17/093-RG178	852-009-16-429	M39029/77-429	Yellow	Red	White

MATERIAL AND FINISH

- Contact Body: Copper Alloy/Gold Plated
- Center Contact: Copper Alloy/Gold Plated
- Crimp Sleeve: Copper Alloy/Gold Plated
- Insulator: Teflon

© 2022 Glenair, Inc • 1211 Air Way, Glendale, CA 91201 • 818-247-6000 • www.glenair.com • U.S. CAGE code 06324 • SuperNine™ Catalog
Dimensions in Inches (millimeters) are subject to change without notice.

SIZE #12 COAXIAL CONTACTS



These contacts offer improved frequency response compared to standard coaxial contacts. Nominal impedance is 50 ohms VSWR is 1.32:1 at 3GHz when the contacts are used with M17/113-RG316 cable. Insertion loss at 3GHz is 0.20 dB maximum. Inner contact is rated at 1 amp, the outer contact 12 amps. DWV voltage rating is 1000 Vac rms sea level, 250 Vac at 50,000 feet. Contacts are packaged individually and shipped unassembled with instruction sheet. Inner and outer contacts are gold-plated copper alloy. 5000 megohm insulation resistance.

How-To-Order Size #12 Coaxial Contacts

Type	Cable Accommodation	Part Number	Military Part Number	Color Band		
				1st	2nd	3rd
Pin	M17/113-RG316 M17/094-RG179	852-004-12-558	M39029/102-558	Green	Green	Gray
	M17/152-00001 (RG316DS)	852-016-02	N/A	N/A		
	M17/93-RG178	852-016-03	N/A	N/A		
	TFlex-405 or 086 equivalent	852-018	N/A	N/A		
Socket	M17/113-RG316 M17/094-RG179	852-005-12-559	M39029/102-558	Green	Green	White
	M17/152-00001 (RG316DS)	852-019-02	M39029/103-559	N/A		
	M17/93-RG178	852-019-03	N/A	N/A		
	TFlex-405 or 086 equivalent	852-037	N/A	N/A		

MATERIAL AND FINISH

- Contact Body: Copper Alloy/Gold Plated
- Hood: Stainless Steel/Passivated
- Center Contact: Copper Alloy/Gold Plated
- Crimp Sleeve: Copper Alloy/Gold Plated
- Insulator: Teflon

© 2022 Glenair, Inc • 1211 Air Way, Glendale, CA 91201 • 818-247-6000 • www.glenair.com • U.S. CAGE code 06324 • SuperNine™ Catalog
Dimensions in Inches (millimeters) are subject to change without notice.

SuperNine® Contacts
MIL-DTL-38999 Series III Type
M39029 and Glenair signature contact solutions

SIZE #12, 3 GHZ MAX OPERATING FREQUENCY, 75 OHM MATCHED IMPEDANCE COAXIAL CONTACTS



Pin Contact



Socket Contact

75 Ohm coax contacts provide DC – 3 GHz frequency range. Crimp termination. Supplied as unassembled kit with contact body, center contact and outer ferrule. Snap-in, rear-release contacts fit Series 80 Mighty Mouse connectors and Glenair MIL-DTL-38999 Series I, III, and IV connectors with size #12 cavities. Gold-plated copper alloy, fluoroplastic insulator.

Size 12, 75 Ohm Matched-Impedance Coaxial Contacts			
RG Cable	Pin Contact	Socket Contact	Assembly Instructions
V75268, V76261, V73263 (PIC™ Wire and Cable)	852-103-01	852-106-01	AI85088, AI85024
RG179 (M17/94-RG179)	852-103-02	852-106-02	AI85031, AI85075

Technical Data	
Specifications	**Construction**
■ Operating temperature: -65°C. to +200°C. ■ Dielectric withstanding voltage: 500 VRMS ■ Current rating: 1 ampere ■ VSWR: 1.25:1 max. @ 3 GHz ■ Impedance: 75 Ohms nominal ■ Durability: 500 mating cycles ■ Shock: EIA-364-27 condition D ■ Vibration: EIA-364-28 condition VI, letter J	■ Center contact, body,crimp sleeve: copper alloy, 50 microinches gold over nickel plating ■ Insulator: fluoroplastic ■ Socket Hood: stainless steel, passivated

Pin Contact 852-103-01, -02

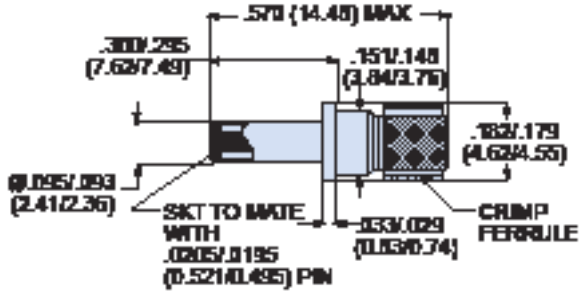

Socket Contact 852-106-01, -02

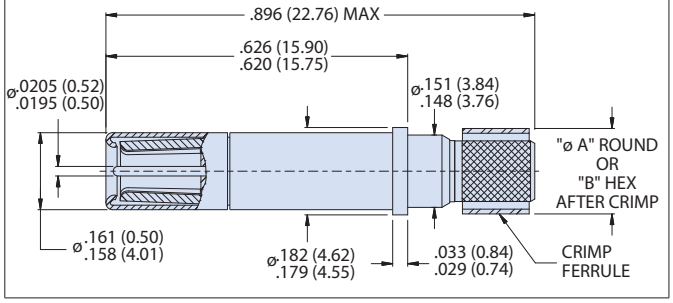

© 2022 Glenair, Inc • 1211 Air Way, Glendale, CA 91201 • 818-247-6000 • www.glenair.com • U.S. CAGE code 06324 • SuperNine™ Catalog
Dimensions in Inches (millimeters) are subject to change without notice.

SuperNine® Contacts

MIL-DTL-38999 Series III Type

M39029 and Glenair signature contact solutions

SIZE #12, 3 GHZ MAX OPERATING FREQUENCY, 75 OHM MATCHED IMPEDANCE COAXIAL CONTACTS

Coax contacts 852-103 and 852-104 are designed for use with V75268, V76261, V73263 PIC wire and RG179. V75268 and V75261 coaxial cable can be used in cabin entertainment analog and digital video applications. V75263 cable is suitable for high definition digital video and offers low VSWR and attenuation characteristics. Manufactured by PIC Wire, these cables are Skydrol resistant, RoHS compliant and meets the FAA flammability requirements of FAR Part 23 and 25, Appendix F; complies with MIL-C-17 as applicable

V75268

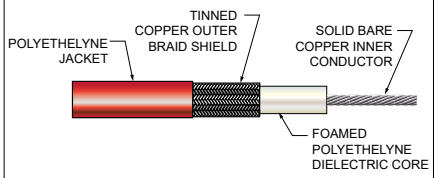

V75261

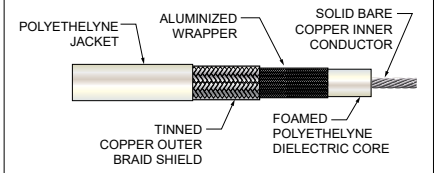

V76263

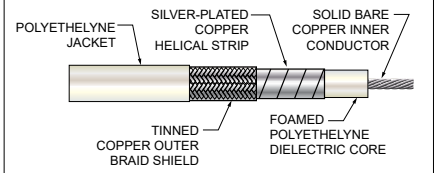

M17/94 RG179

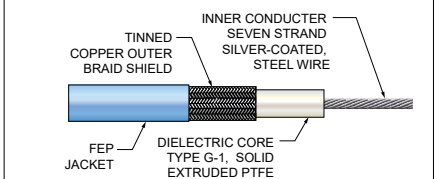

Glenair Part No.	960-130	960-131	960-132	N/A
Manufacturer Part No.	V75268	V76261	V73263	N/A
Military Part Number	N/A	N/A	N/A	RG179 (M17/94-RG179)
Manufacturer	PIC	PIC	PIC	MIL-SPEC
Impedance	75	75	75	75
Velocity of Propagation %	80.0	80.0	80.0	69.5
Capacitance (pF/ft)	16.0	16.0	16.0	23.0
Conductor Wire Size	AWG 26	AWG 26	AWG 26	.012 (0.30)
Conductor Type	Stranded SPC	Stranded SPC	Stranded SPC	Stranded SPC
Dielectric	Foamed Flouropolymer	Foamed Flouropolymer	Foamed Flouropolymer	Extruded PTFE
Shielding Effectiveness (dB)	-50 min	-90	-110	N/A
Outer Diameter	0.12 (3.10)	0.12 (3.10)	0.13 (3.18)	.100 (2.54)
Weight (lbs/100ft.)	1.3	1.1	1.5	.0108
Temperature Range	-55° to +150°C	-55° to +150°C	-55° to +150°C	-55° to +200°C
Frequency	Attenuation (dB/100 ft) nom/max			
135 MHz	5.9/6.5	5.8/6.4		
180 MHz	6.9/7.6	6.7/7.4		
270 MHz	8.6/9.5	8.3/9.1		
360 MHz	10.1/11.1	9.7/10.6		
400 MHz			10.2/11.3	21.0 nominal
750 MHz			14.2/15.7	
1.45 GHz		21.9/23.4	21.9/23.4	
1.5 GHz			20.6/22.7	
3.0 GHz		33.7/36.1	30.3/33.3	
6.0 GHz			44.9/49.5	

© 2022 Glenair, Inc • 1211 Air Way, Glendale, CA 91201 • 818-247-6000 • www.glenair.com • U.S. CAGE code 06324 • SuperNine™ Catalog
Dimensions in Inches (millimeters) are subject to change without notice.

SuperNine® Contacts
MIL-DTL-38999 Series III Type
M39029 and Glenair signature contact solutions

SIZE #8 50 OHM CONTACTS FOR LOW LOSS HIGH PERFORMANCE COAX CABLE



Pin Contact



Socket Contact

Coax contacts fit Glenair Series 80 Mighty Mouse connectors and MIL-DTL-38999 Series I, III, and IV connectors with size 8 contact cavities. 50 Ohm nominal impedance. 0-2.5 GHz frequency range. Solder conductor to center contact, shield termination is crimp type. Supplied as unassembled kit with contact body, center contact, outer ferrule and sealing boot. Contacts are snap-in, rear release with plastic extraction tool. Gold-plated copper alloy, Fluoropolymer insulator. See following page for information on coaxial cable.

Fig.	Contact Type	Part Number Contact Only	Part Number Contact and Sealing Boot	Sealing Boot
Fig. 1	Pin	852-043	852-043F	859-042-02
Fig. 2	Socket	852-042	852-042F	859-042-02

Pin Contact 852-043F

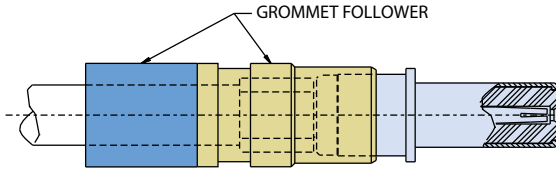

SHOWN WITH SEALING BOOT

Pin Contact 852-043

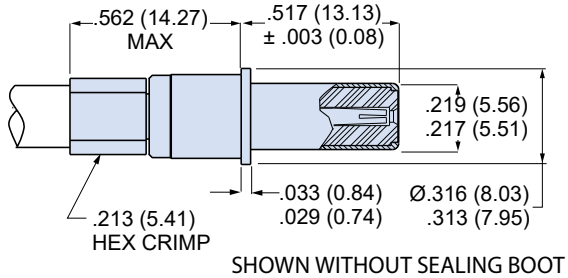

SHOWN WITHOUT SEALING BOOT

Materials, Finishes	
Contact body, center contact, ferrule	Copper Alloy
Contact finish	50 microinches gold over nickel plating
Dielectric	Fluorocarbon

Socket Contact 852-042F

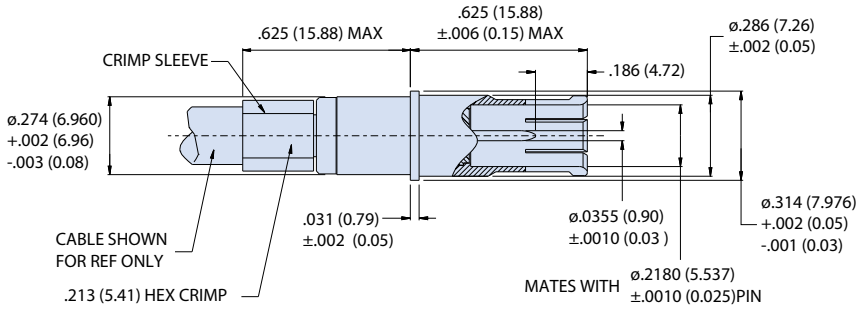

Technical Data

Specifications	Construction
❑ Nominal Impedance: 50 Ohms ❑ Frequency Range: 0 – 2.5 GHz ❑ Dielectric Withstanding Voltage: 1300 VAC sea level, 250 VAC at 50,000 feet ❑ Insulation Resistance: 5000 megOhms minimum ❑ Durability: 500 mating cycles	❑ Center contact: copper alloy/ gold plated ❑ Body: copper alloy/ gold plated ❑ Ferrule: copper alloy/ gold plated ❑ Insulator: PTFE / N.A.

© 2022 Glenair, Inc • 1211 Air Way, Glendale, CA 91201 • 818-247-6000 • www.glenair.com • U.S. CAGE code 06324 • SuperNine™ Catalog
Dimensions in Inches (millimeters) are subject to change without notice.

SIZE #8 50 OHM CONTACTS FOR LOW LOSS HIGH PERFORMANCE COAX CABLE

Coax contacts 852-042 and 852-043 are designed for use with LLSB-200 and LMR-195 cable (reference only, not sold by Glenair). This low loss, flexible cable is suitable for shipboard, airframe and tactical vehicles. Manufactured by Times Microwave, these cables are qualified to MIL-DTL-17/220. LMR-197 is a drop-in replacement for RG-58 and RG142 (TLMR is not QPL). Jacket is non-halogen, low smoke black UV resistant cross-linked polyethylene.

Manufacturer Part No.	LLSB-200	LMR-195
Military Part Number	M17/220-00001	M17/ RG-58 or RG142
Impedance	50 ± 2	50
Velocity of Propagation %	80	80
Capacitance (pF/ft)	24.5	25.4
Conductor Type	Bare Copper	Bare Copper
Conductor Diameter	.044 (1.12)	.037 (.94)
Dielectric Diameter	.118 (3.0)	.110 (2.79)
Outer Shield Diameter	.144 (3.66)	.116 (2.95)
Shielding Effectiveness (dB)	90 min.	90 min
Outer Diameter	.195 (4.95)	.195 (4.95)
Temperature Range	-30° to +85°C	-40° to +85°Cw
Weight (lbs/ft.)	.037	.021
Attenuation (dB/100 ft)	nominal	
10 MHz	1.3	
30 MHz	2.1	2.0
50 MHz	2.7	2.5
100 MHz	3.8	
150 MHz		4.4
400 MHz	7.7	
450 MHz		7.8
900 MHz		11.1
1 GHz	12.0	
1.5		14.5
2.5 GHz	20.0	19.0

LLSB-200 and LMR-195 Cable

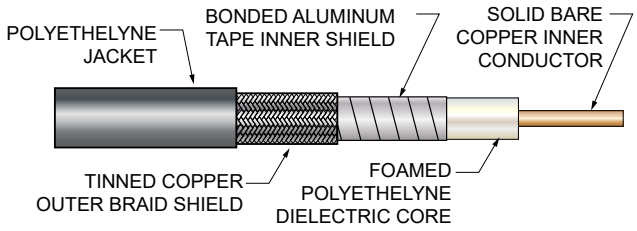

NOTE

1. 852-043 / -042 can be used / terminated on both cables LLSB-200 and LMR-195

Sealing Boot

Optional sealing boot is recommended. Slide boot onto wire before terminating contact. After contact is installed in connector, slide boot forward into connector grommet to seal the contact cavity. "F" suffix on contact part number specifies contact supplied with 859-042-02 sealing boot.



Sealing Boot Dimensions		
Wire Dia. (in.)	Wire Dia. (mm.)	Part Number
.130 - .170	3.30 - 4.32	859-042-02

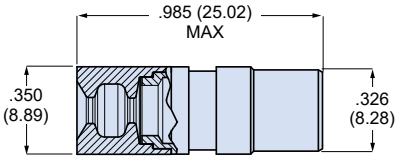

© 2022 Glenair, Inc • 1211 Air Way, Glendale, CA 91201 • 818-247-6000 • www.glenair.com • U.S. CAGE code 06324 • SuperNine™ Catalog
Dimensions in Inches (millimeters) are subject to change without notice.

SuperNine® Contacts

MIL-DTL-38999 Series III Type

M39029 and Glenair signature contact solutions

SIZE #8, 3 GHZ MAX OPERATING FREQUENCY, 50 OHM COAX CONTACTS AND CABLE



Pin Contact



Socket Contact

Dash Number	Cable Accommodation	"A" Hex	"B" Hex	Pin Part No.	Socket Part No.
-01	M17/152-00001 (RG316DS)	.128 (3.25)	-	852-031-XX no sealing boot	852-030-XX no sealing boot
-02	M17/113-RG316	.128 (3.25)	-		
-03	M17/060-RG142 M17/128-RG400	-	.218 (5.54)	852-031-XXF with sealing boot	852-030-XXF with sealing boot
-04	M17/28-RG58	-	.218 (5.54)		

Pin Contact 852-031

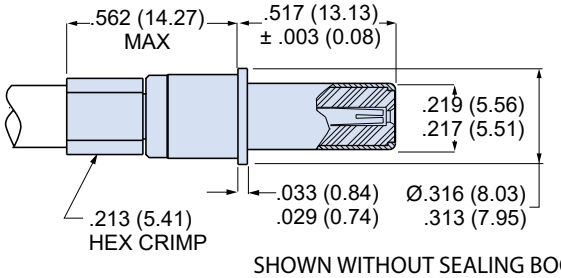

SHOWN WITHOUT SEALING BOOT

Socket Contact 852-030

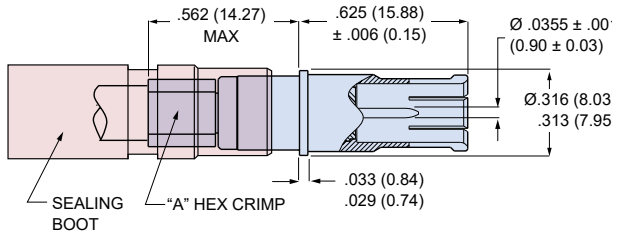

SHOWN WITH SEALING BOOT

Wire Dia. (in.)	Wire Dia. (mm.)	Part Number
.090 - .130	2.3 - 3.3	859-042-01
.130 - .170	3.3 - 4.3	859-042-02
.170 - .205	4.3 - 5.2	859-042-03

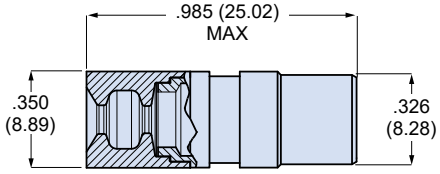

Sealing Boot	
Contact Part No.	Sealing Boot
852-031-01F	859-042-01
852-030-01F	859-042-01
852-031-02F	859-042-01
852-030-02F	859-042-01
852-031-03F	859-042-03
852-030-03F	859-042-03
852-031-04F	859-042-03
852-030-04F	859-042-03

© 2022 Glenair, Inc • 1211 Air Way, Glendale, CA 91201 • 818-247-6000 • www.glenair.com • U.S. CAGE code 06324 • SuperNine™ Catalog
Dimensions in Inches (millimeters) are subject to change without notice.

SuperNine® Contacts

MIL-DTL-38999 Series III Type

M39029 and Glenair signature contact solutions

SIZE #8, 3 GHZ MAX OPERATING FREQUENCY, 50 OHM COAX CONTACTS AND CABLE

M17/152-00001

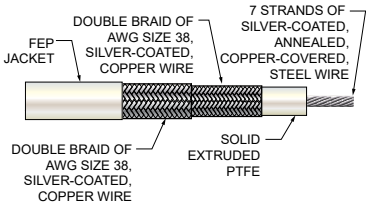

M17/113-RG316

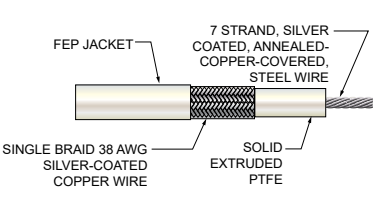

M17/60-RG142

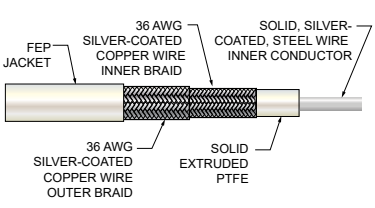

M17/128-RG400

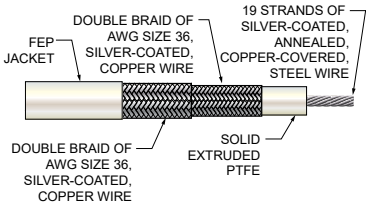

M17/28-RG058

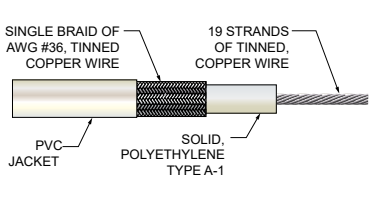

Military Part Number	M17/152-00001 (RG316DS)		M17/113-RG316		M17/060-RG142		M17/128-RG400		M17/28-RG058	
Impedance (Ohms)	50		50		50		50		50	
Velocity of Propagation %	69.5		69.5		69.5		69.5		69.5	
Capacitance (pF/ft)	32.0		32.0		29.3		32		32.2	
Conductor Wire Size	Seven Strands of Silver-Coated, Annealed Copper-Covered, Steel Wire. OD: 0.0201 ± .0010				Solid Silver-Coated, Steel Wire. OD: 0.0201 ± .0010		Solid Silver-Coated Steel Wire OD: 0.037 ± .001		19 Strands of Tinned Copper Wire OD: 0.0355 ± 0.0020	
Dielectric Core	Type F-1: Solid, Extruded PTFE		Type F-1: Solid, Extruded PTFE		Type F-1: Solid, Extruded PTFE		Type F-1: Solid, Extruded PTFE		Type A-1: Solid Polyethylene	
First Shield	38 AWG Silver-Coated Copper Wire 95.4% Nom. Coverage		38 AWG Silver-Coated Copper Wire 95.2% Nom. Coverage		36 AWG Silver-Coated Copper Wire 94.8% Nom. Coverage		36 AWG Silver-Coated Copper Wire 94.8% Nom. Coverage		Single Braid of 36 AWG Tinned Copper Wire 92.8% Nom. Coverage	
Second Shield	38 AWG Silver-Coated Copper Wire 94.6 Nom. Coverage		N/A		36 AWG Silver-Coated Copper Wire 93.1 Nom. Coverage		36 AWG Silver-Coated Copper Wire 93.6% Nom. Coverage		N/A	
Shielding Effectiveness (dB)	40 to 60 dB range acceptable for lower frequency applications									
Jacket	Type IX: FEP		Type IX: FEP		Type IX: FEP		Type IX: FEP		Type IIA: PVC	
Outer Diameter	.114 (2.90) ±.004 (.10)		.098 (2.49) ±.004 (.10)		.195 (4.95) ±.005 (0.13)		.195 (4.95) ±.005 (0.13)		.195 (4.95) ±.004 (0.10)	
Temperature Rating	-55°C to +200° C		-55°C to +200° C		-55°C to +200°C		-55°C to +200°C		-40°C to +85°C	
Weight	1.85 (lbs/100 ft.)		1.22 (lbs/ft.)		.043 (lbs/ft.)		5 (lbs/100 ft.)		.026 (lbs/ft.)	
Max. Attenuation	Freq. (MHz)	dB/100 ft	Freq. (MHz)	dB/100 ft	Freq. (MHz)	dB/100 ft	Freq. (MHz)	dB/100 ft	Freq. (MHz)	dB/100 ft
	50	7.5	50 MHz	30	50 MHz	3.0	50 MHz	3.2	50 MHz	4.0
	500	26	100 MHz	30	100 MHz	4.4	100 MHz	4.5	100 MHz	6.5
	1,000	40	400 MHz	23	400 MHz	9.3	400 MHz	10.5	400 MHz	17.0
	3,000	75	1000 MHz	21	1000 MHz	15.3	1,000 MHz	17	1000 MHz	28.0
	10,000	170	3000 MHz	17	3000 MHz	29.3	3,000 MHz	38		
	12,400	230			8000 MHz	57.8	10,000 MHz	78		
					12400 MHz	85.4	12,400 MHz	90		

© 2022 Glenair, Inc • 1211 Air Way, Glendale, CA 91201 • 818-247-6000 • www.glenair.com • U.S. CAGE code 06324 • SuperNine™ Catalog
Dimensions in Inches (millimeters) are subject to change without notice.

SuperNine® Contacts

MIL-DTL-38999 Series III Type

M39029 and Glenair signature contact solutions

SIZE #8, 4 GHZ MAX FREQUENCY, 75 OHM LOW-LOSS, MATCHED-IMPEDANCE COAX CONTACTS & CABLE



852-056
Pin Contact



852-057
Socket Contact



852-082
Pin Contact



852-083
Socket Contact

Size 8 coax contacts fit aerospace-grade digital video cable. 75 Ohm nominal impedance. 0-4 GHz frequency range. Crimp termination. Supplied as unassembled kit with contact body, center contact, outer ferrule and sealing boot. These snap-in, rear-release contacts fit Series 80 Mighty Mouse connectors and Glenair MIL-DTL-38999 Series I, III, and IV connectors with size #8 cavities. Gold-plated copper alloy, fluoroplastic insulators.

Size 8, 75 Ohm Matched-Impedance Coaxial Contacts

Cable	Contact without Sealing Boot		Contact with Sealing Boot		Sealing Boot	*Hex A Crimp Dim*
	Pin	Socket	Pin	Socket		
960-130 (V7568) 960-131 (V76261) 960-132 (V73263)	852-056-01	852-057-01	852-056-01F	852-057-01F	859-042-01	.218 (5.54)
RG179 (M17/ 94-RG179)	852-056-02	852-057-02	852-056-02F	852-057-02F	859-042-01	.128 (3.25)
V78209 (PIC™ Wire and Cable)	852-082-01	852-083-01	852-082-01F	852-083-01F	687-754-8-8	.231 (5.87)
LMR-240-75 (Times Microwave)	852-082-02	852-083-02	852-082-02F	852-083-02F	687-754-8-9	.231 (5.87)

Pin Contact 852-056-01/-02, 852-082-01/-02

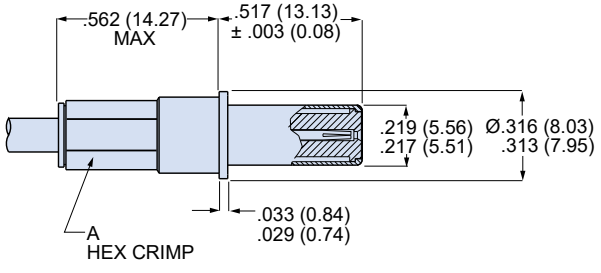

Pin Contact

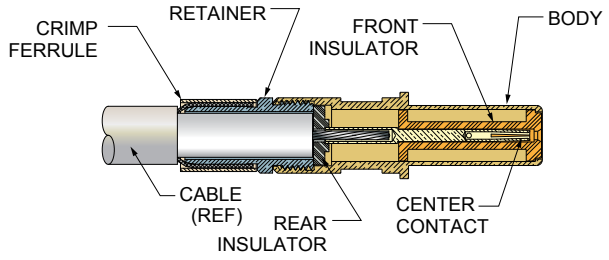

Socket Contact 852-057-01/-02, 852-083-01/-02

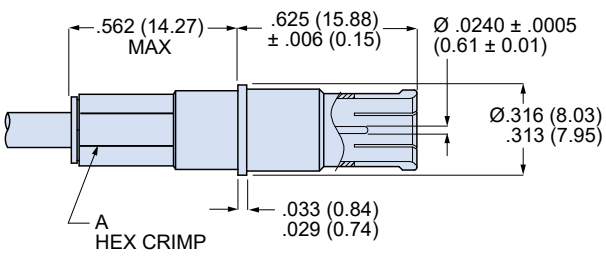

Socket Contact\I

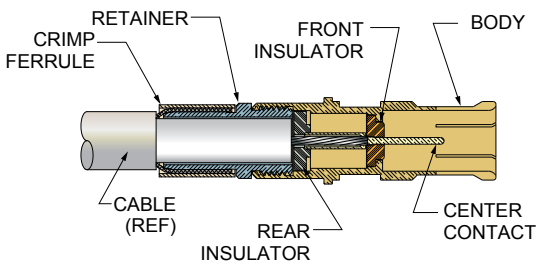

© 2022 Glenair, Inc • 1211 Air Way, Glendale, CA 91201 • 818-247-6000 • www.glenair.com • U.S. CAGE code 06324 • SuperNine™ Catalog

Dimensions in Inches (millimeters) are subject to change without notice.

SIZE #8 COAXIAL CONTACT CRIMP TOOLS AND SEALING BOOT

Technical Data
Specifications
❑ Operating temperature: -65ºC. to +200ºC.
❑ Dielectric withstanding voltage: 500 Vac rms at sea level
❑ Current rating: 1 ampere
❑ VSWR: 1.25:1 max. @ 4 GHz
❑ 75 Ohm nominal impedance
❑ Durability: 500 mating cycles
❑ Shock: EIA-364-27 condition D
❑ Vibration: EIA-364-28 condition VI, letter J
Construction
❑ **Center contact, body, retainer, clamp nut, ferrule**: copper alloy, 50 microinches gold over nickel plating
❑ **Front and rear insulator**: fluoropolymer
❑ **Sealing boot**: fluorosilicone rubber, glass-filled PEI

Sealing Boot

Optional sealing boot is recommended. Slide boot onto wire before terminating contact. After contact is installed in connector, slide boot forward into connector grommet to seal the contact cavity. "F" suffix on contact part number specifies contact supplied with sealing boot.

Sealing Boot Dimensions		
Wire Dia. (in.)	Wire Dia. (mm.)	Part Number
.090 - .130	2.3 - 3.3	859-042-01
.200 - .225	5.08 - 5.715	687-754-8-8
.225 - .240	5.715 - 6.096	687-754-8-9

Sealing Boot 859-042-01



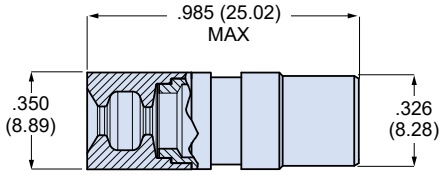

Sealing Boot 687-754-8-8/-9

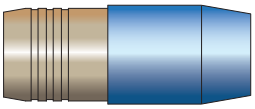

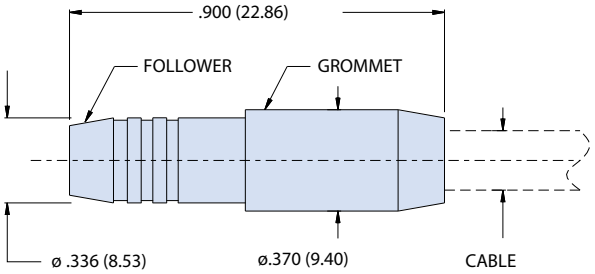

© 2022 Glenair, Inc • 1211 Air Way, Glendale, CA 91201 • 818-247-6000 • www.glenair.com • U.S. CAGE code 06324 • SuperNine™ Catalog
Dimensions in Inches (millimeters) are subject to change without notice.

SIZE #8, 4 GHZ MAX FREQUENCY, 75 OHM LOW-LOSS, MATCHED-IMPEDANCE COAX CONTACTS & CABLE

PIC™ brand video cable is specially designed and manufactured for reliable performance in aircraft systems and other harsh environments involving high temperature, EMI and corrosive materials. Improved strength, lower attenuation, and better shielding compared with M17/94-RG179. Silver-plated conductor, foamed FEP dielectric, tinned copper braid, FEP or ETFE jacket. Skydrol resistant, RoHS compliant, meets FAA FAR Parts 23 and 25, Appendix F flammability, complies with MIL-DTL-17.

PIC™ V75268

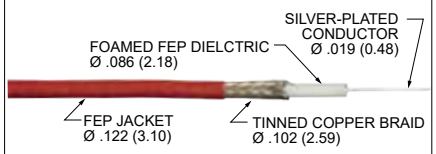

PIC™ V76261

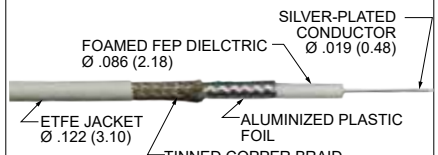

PIC™ V73263

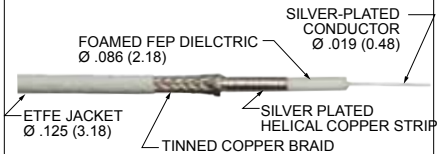

Glenair Part No.	960-130		960-131		960-132	
Manfacturer Part No.	V75268		V76261		V73263	
Mandufacturer	Picwire		Picwire		Picwire	
Impedance (Ohms)	75		75		75	
Velocity of Propagation %	80		80		80	
Capacitance (pF/ft)	16.0		16.0		16.0	
Conductor Wire Size	AWG 26 Stranded SPC		AWG 26 Stranded SPC		AWG 26 Stranded SPC	
Outer Diameter	0.12 (3.10)		0.12 (3.10)		0.13 (3.18)	
Dielectric	Foamed Fluoropolymer		Foamed Fluoropolymer		Foamed Fluoropolymer	
First Shield	Tinned copper braid, 95% coverage					
Second Shield	None		Aluminized film, 100% coverage		Silver plated helical copper strip, 100%	
Shielding Effectiveness (dB)	50		90		110	
Video Application	RS170		RS170		SMPTE 292M	
Temperature Rating	-65° to +165° C		-65° to +165° C		-65° to +165° C	
Weight (lbs/100 ft.)	1.2 lbs		1.1 lbs		1.5 lbs	
Time Delay	1.28		1.28		1.28	
Attenuation (dB/100 ft)	Nominal	Max.	Nominal	Max.	Nominal	Max.
1 MHz	0.51	0.55	0.49	0.52	0.43	0.58
10 MHz	1.70	1.77	1.6	1.71	1.4	1.6
100 MHz	5.3	5.7	5.1	5.5	4.5	5.0
400 MHz	11.1	11.8	10.6	11.3	9.6	10.6
1.45 GHz	23.0	24.6	21.9	23.4	20.0	22.0
3 GHz	35.0	37.4	33.7	36.1	30.9	34.0

© 2022 Glenair, Inc • 1211 Air Way, Glendale, CA 91201 • 818-247-6000 • www.glenair.com • U.S. CAGE code 06324 • SuperNine™ Catalog
Dimensions in Inches (millimeters) are subject to change without notice.

SuperNine® Contacts

MIL-DTL-38999 Series III Type

M39029 and Glenair signature contact solutions

SIZE #8, 4 GHZ MAX FREQUENCY, 75 OHM LOW-LOSS, MATCHED-IMPEDANCE COAX CONTACTS & CABLE

PIC™ brand video cable is specially designed and manufactured for reliable performance in aircraft systems and other harsh environments involving high temperature, EMI and corrosive materials. Improved strength, lower attenuation, and better shielding compared with M17/94-RG179. Silver-plated conductor, foamed FEP dielectric, tinned copper braid, FEP or ETFE jacket. Skydrol resistant, RoHS compliant, meets FAA FAR Parts 23 and 25, Appendix F flammability, complies with MIL-DTL-17.

PIC™ V78209

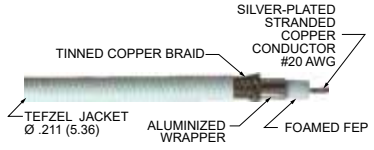

LMR®-240-75

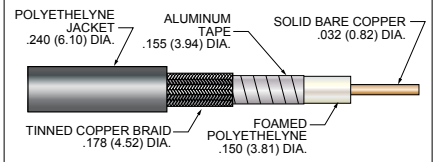

M17/94 RG179

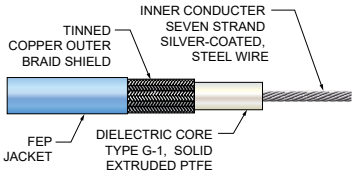

Glenair Part No.	962-007		N/A		N/A	
Manufacturer Part No.	V78209		LMR-240-75		N/A	
Military Part Number	N/A		N/A		M17/94-RG179	
Manufacturer	PIC™		Times Microwave		MIL-SPEC	
Impedance (Ohms)	75		75		75 ±3	
Velocity of Propagation %	80		84		69.5	
Capacitance (pF/ft)	16.5		16.1		23	
Conductor Wire Size	20 AWG Stranded SPC		.032 (.82)		.0040 (0.10)	
Outer Diameter	.21 (5.36)		.240 (6.10)		.100 (2.54)	
First Shield	Tin-Coated Braid		Tin-Coated Braid		7 strand SC[1], ACC[2], steel wire	
Second Shield	Aluminized film, 100% coverage		Aluminized film, 100% coverage		None	
Temperature Rating	-55° to +150° C		-40° to +85° C		-55° to +200°C	
Weight (lbs/100 ft.)	3.0		3.4		.012 (lbs/ft.)	
Max. Attenuation	Freq.	dB/100 ft	Freq.	dB/100 ft	Freq.	dB/100 ft
	1 MHz	0.4	50 MHz	1.6		
	10 MHz	0.9	450 MHz	5.0		
	100 MHz	3.0	900 MHz	7.2	4 GHz	21.0
	400 MHz	6.1	1.5 GHz	9.4		
	1.45 GHz	13.6	2.0 GHz	10.9		
	3 GHz	25.0	2.5 GHz	12.3		

1. SC = silver coated
2. ACC = annealed copper covered

© 2022 Glenair, Inc • 1211 Air Way, Glendale, CA 91201 • 818-247-6000 • www.glenair.com • U.S. CAGE code 06324 • SuperNine™ Catalog
Dimensions in Inches (millimeters) are subject to change without notice.

SuperNine® Contacts

MIL-DTL-38999 Series III Type

M39029 and Glenair signature contact solutions

SIZE #8 COAXIAL CONTACTS



Fig. 1
Pin Contact
852-007-08-367



Fig. 2
Socket Contact
852-006-08-366

Coax contacts accept M17/095-RG180 cable. These snap-in, rear release contacts fit Glenair Series 80 Mighty Mouse connectors and Glenair MIL-DTL-38999 Series I, III, and IV connectors with size #8 cavities. Crimp termination. Gold-plated copper alloy, Fluoropolymer insulator. Supplied unassembled. Order sealing boot separately (fig. 3). 1 A current rating, 500 Vac. SAE AS39029 qualified.

Fig.	Item	Cable Accommodation	Part Number	AS39029 Part Number	Color Bands		
					1st	2nd	3rd
Fig. 1	Pin	M17/095-RG180	852-007-08-367	M39029/60-367	Orn	Blu	Vio
Fig. 2	Socket	M17/095-RG180	852-006-08-366	M39029/59-366	Orn	Blu	Blu
Fig. 3	Sealing Boot	M17/095-RG180	859-042-02	N/A			

Pin Contact 852-007

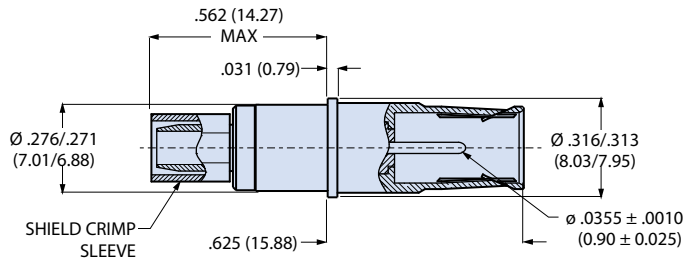

Socket Contact 852-006

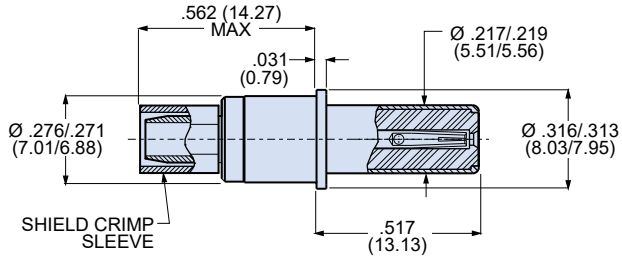

Sealing Boot

Sealing boot is ordered separately. Slide boot onto wire before terminating contact. After contact is installed in connector, slide boot forward into connector grommet to seal the contact cavity.

Wire Dia. (in.)	Wire Dia. (mm.)	Part Number
.130 - .170	3.3 - 4.3	859-042-02



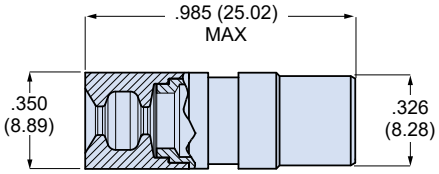

© 2022 Glenair, Inc • 1211 Air Way, Glendale, CA 91201 • 818-247-6000 • www.glenair.com • U.S. CAGE code 06324 • SuperNine™ Catalog
Dimensions in Inches (millimeters) are subject to change without notice.

SIZE #8 COAXIAL CONTACT 95 OHM CABLE

Material and Finish	
Contact Body, Center Contact, Ferrule	Copper Alloy, Gold Plated
Insulator	PTFE
Sealing Boot Grommet	Fluorosilicone
Grommet Follower	Polyetherimide

M17/95-RG180

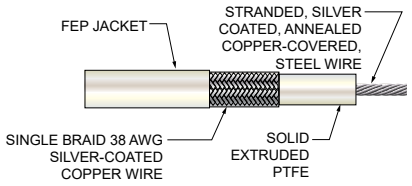

Contact Specifications	
Current Rating	1 ampere
Contact Resistance, Inner Contact	120 millivolt max. voltage drop @ 1 ampere
Contact Resistance – Outer Contact	60 millivolt max. voltage drop @ 12 amperes
Dielectric Withstanding Voltage	1300 Vrms Sea Level, 250 Vrms at 50,000 feet
Temperature Range	-65°C to +200°C
Durability	500 mating cycles
Corrosion	EIA-364-26, condition B, 48 hours
Vibration	EIA-364-28, condition V, letter J, 37g's
Shock	EIA-364-27, condition D, 300g's

Military Part Number	M17/95-RG180	
Maximum Operating Frequency	3 GHz	
Impedance (Ohms)	95	
Velocity of Propagation %	69.5	
Capacitance (pF/ft)	17.4	
Conductor	AWG 28 (7/38) Silver-Coated, Annealed-Copper-Covered, Steel Wire.	
Shielding Effectiveness (dB)	<-90 dB	
Dielectric Core	Type F-1: Solid, Extruded PTFE	
First Shield	38 AWG Silver-Coated Copper Wire 91.0% Nom. Coverage	
Second Shield	N/A	
Jacket	Type IX: FEP	
Outer Diameter	.141 (3.58) ± .004 (0.10)	
Temperature Rating	-55°C to +200° C	
Weight	.0198 (lbs/ft.)	
Time Delay nS/ft	N/A	
Max. Attenuation	Freq. (MHz)	dB/100 ft
	400	17.0

© 2022 Glenair, Inc • 1211 Air Way, Glendale, CA 91201 • 818-247-6000 • www.glenair.com • U.S. CAGE code 06324 • SuperNine™ Catalog
Dimensions in Inches (millimeters) are subject to change without notice.

SuperNine® Contacts

MIL-DTL-38999 Series III Type

M39029 and Glenair signature contact solutions

SIZE #8 CONCENTRIC TWINAX CONTACTS FOR MIL-STD-1553 DATABUS



Fig. 1
Pin Contact
853-003-08-625



Fig. 2
Socket Contact
853-004-08-628



Fig. 3
Heatshrink Boot
(Supplied with Contact)

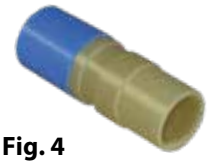

Fig. 4
Sealing Boot
859-042-01
(Not supplied with contact. Order separately)

Concentric twinax contacts accept M17/176-0002 shielded twisted pair databus cable. These snap-in, rear release contacts fit Glenair Series 23 Mighty Mouse connectors and Glenair MIL-DTL-38999 Series I, III and IV connectors with size #8 cavities. Crimp termination. Gold-plated copper alloy, FEP insulator. Supplied unassembled with heatshrink boot (fig.3). Order sealing boot separately (fig.4). 55mV max voltage drop at 1 amp test current. DWV at sea level: 1000 VAC between contacts; 500 VAC between intermediate and outer contact. SAE AS39029 qualified.

Fig.	Description	Cable Accommodation	Part Number	AS39029 Part Number	Color Bands		
					1st	2nd	3rd
Fig. 1	Pin	M17/176-00002	853-003-08-625	M39029/113-625	Blu	Red	Grn
Fig. 2	Socket	M17/176-00002	853-004-08-628	M39029/114-628	Blu	Red	Vio
Fig. 4	Sealing Boot	M17/176-00002	859-042-01				

Pin Contact 853-003-08-625

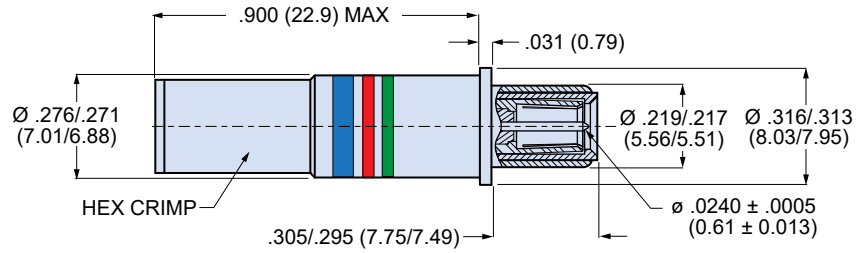

Socket Contact 853-004-08-628

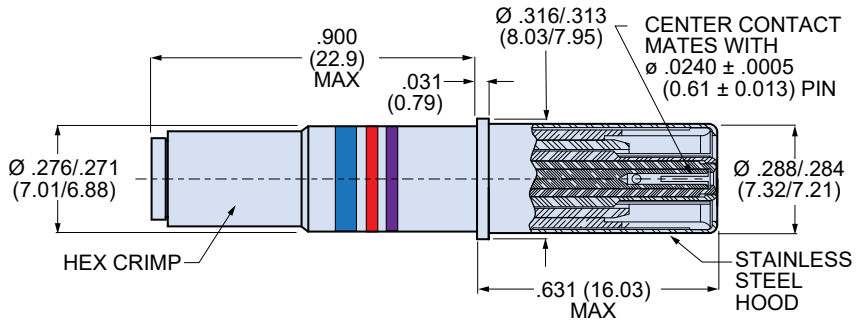

© 2022 Glenair, Inc • 1211 Air Way, Glendale, CA 91201 • 818-247-6000 • www.glenair.com • U.S. CAGE code 06324 • SuperNine™ Catalog
Dimensions in Inches (millimeters) are subject to change without notice.

CABLE FOR SIZE #8 TWINAX CONTACTS FOR MIL-STD-1553 DATABUS

Material and Finish	
Contact Body, Inner and Intermediate Contacts and Crimp Sleeve	Copper Alloy / Gold Plated
Insulators	Peek and PTFE / N/A
Sealing Boot Grommet	Fluorosilicone
Grommet Follower	Polyetherimide

Contact Specifications	
Current Rating	**1 ampere**
Contact Resistance, Center and Intermediate Contacts	55 millivolt max. voltage drop @ 1 ampere
Contact Resistance – Outer Contact	75 millivolt max. voltage drop @ 12 amperes
Dielectric Withstanding Voltage, Center Contact to Intermediate Contact	1000 Vrms Sea Level, 250 Vrms at 70,000 feet
Dielectric Withstanding Voltage, Intermediate Contact to Outer Contact	500 Vrms Sea Level, 250 Vrms at 70,000 feet
Temperature Range	-65°C to +175°C
Durability	500 mating cycles
Corrosion	EIA-364-26, condition B, 48 hours
Vibration	EIA-364-28, condition V, letter J, 37g's
Shock	EIA-364-27, condition D, 300g's

M17/176-00002

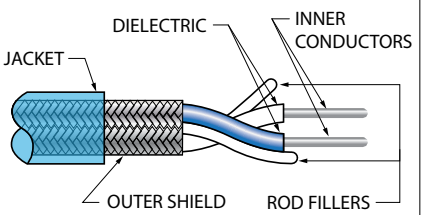

Military Part Number	M17/176-00002	
Impedance	77 Ohm	
Operating Frequency	10 MHz max	
Velocity of Propagation %	68	
Capacitance	24 pF/foot	
Conductor	Two - 24 AWG (19/36) silver-coated, high strength copper alloy wire	
Dielectric	PTFE	
Outer Conductor	Single braid of AWG 38, silver-coated, high strength copper alloy wire	
Jacket	Type XIII: PFA	
Outer Dia.	.129 (3.28) ± .005 (0.13)	
Temperature Rating	-55° to +200°C	
Weight	18 lbs/1000ft	
Max. Attenuation	Freq. (MHz)	dB/100 ft
	1	1.4

Heatshrink Boot

Supplied with contact. Slide onto cable before terminating contact. Slide onto contact after the cable is terminated. Apply heat to shrink the boot and melt the adhesive. Install contact into connector.

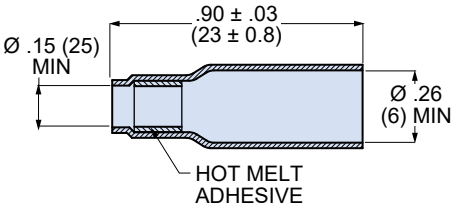

Sealing Boot

Sealing boot is ordered separately. Slide boot onto wire before terminating contact. After contact is installed in connector, slide boot forward into connector grommet to seal the contact cavity. Additional information on sealing boot is on the next page.



Wire Dia. (in.)	Wire Dia. (mm.)	Part Number
.090 - .130	2.3 - 3.3	859-042-01

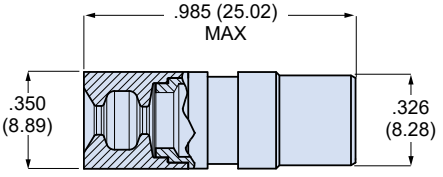

© 2022 Glenair, Inc • 1211 Air Way, Glendale, CA 91201 • 818-247-6000 • www.glenair.com • U.S. CAGE code 06324 • SuperNine™ Catalog
Dimensions in Inches (millimeters) are subject to change without notice.

SuperNine® Contacts

MIL-DTL-38999 Series III Type

M39029 and Glenair signature contact solutions

SIZE #8 DIFFERENTIAL TWINAX CONTACTS



Fig. 1
Pin Contact
853-014



Fig. 2
Socket Contact
853-013

Differential twinax contacts accept shielded twisted pair databus cable. These snap-in, rear release contacts fit Series 80 Mighty Mouse connectors and Glenair MIL-DTL-38999 Series I, III, and IV connectors with size #8 cavities. Crimp termination. Gold-plated copper alloy , FEP insulator. Supplied unassembled with optional sealing boot.

Fig.	Description	Cable	Part Number		
			Basic No.	Dash No	Grommet Follower (Omit for None)
Fig. 1	Pin	See Cable Accommodation Table	853-014	-01 thru -13	F
			853-018	-01	
			853-025	-01 and -02	
Fig. 2	Socket		853-013	-01 thru -13	
			853-017	-01	
			853-024	-01 and -02	

Contact Specifications	
Characteristic Impedance (Ohms)	100 ± 10
Frequency Range	DC – 3 GHz
Insulation Resistance, Ambient Temperature	5000 megOhms minimum
Contact Resistance – Inner Contact*	15.0 milliOhms maximum initial @ 1 ampere
Contact Resistance – Outer Contact*	3.0 milliOhms maximum initial @ 12 amperes
Dielectric Withstanding Voltage	1000 VAC RMS between contacts, 500 VAC RMS between contacts and shell
Temperature Range	-65°C to +200°C
Durability	500 mating cycles
Corrosion (salt Fog)	EIA-364-26, condition B, 48 hours
Vibration	EIA-364-28, condition VI, letter J, 43g's
Shock	EIA-364-27, condition D, 300g's

* Contacts are tested in mated condition at their extremities.

Material and Finish	
Contact Body and Center Contact	Copper alloy / Gold Plated
Crimp Sleeve	Brass or Equivalent / Gold Plated
Insulator, Sealing Boot	High Grade Rigid Dielectric
Sealing Boot Grommet	Fluorosilicone
Grommet Follower	Polyetherimide

Cable Accommodation				
Dash No	Cable Accommodation	Conductor AWG	Ref. Cable Impedance	Assembly Instructions
-01	Gore RCN 8945	24	100 Ohms	AI85007
-02	Gore GSC-03-83971-00	24		
-03	TE (Raychem) 10612	24	77 Ohms	
-04	TE (Raychem) 0024A0024	24	100 Ohms	
	Tensolite 24463/9P025X-2 (LD) S280W502-1	24		
-05	M17/176-00002	24	77 Ohms	
	5 M2022-003	24	75 Ohms	
-07	TE 2525B0524	24	125 Ohms	AI85050
-09	Gore DXN2603 / TE 0028S2664	26/28	100 Ohms	AI85007
-10	PIC E10222	22		AI85138
-11	963-102-30	30		AI85142
-12	Gore GSC-05-84308-00	26		AI85143
-13	Gore DXN2602	24		AI85007

© 2022 Glenair, Inc • 1211 Air Way, Glendale, CA 91201 • 818-247-6000 • www.glenair.com • U.S. CAGE code 06324 • SuperNine™ Catalog
Dimensions in Inches (millimeters) are subject to change without notice.

SuperNine® Contacts

MIL-DTL-38999 Series III Type

M39029 and Glenair signature contact solutions

SIZE #8 DIFFERENTIAL TWINAX CONTACTS

Socket Contact 853-014

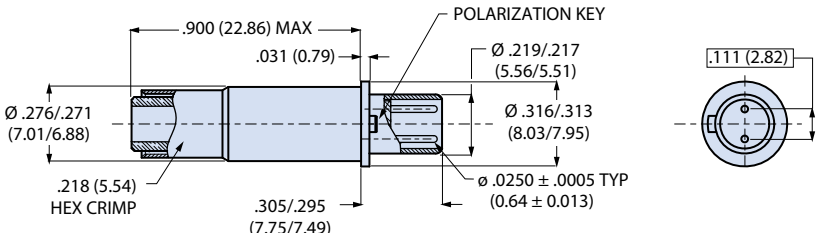

Socket Contact 853-013

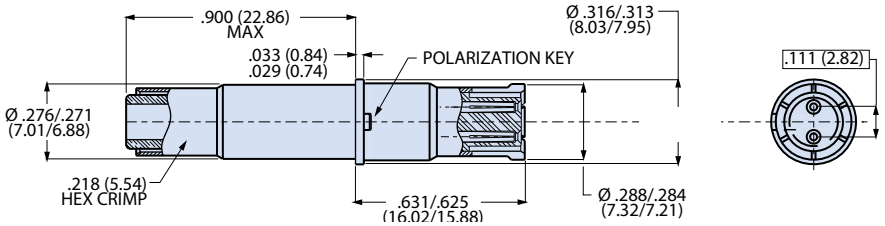

About Differential Twinax Contacts

Differential twinax contacts are multi-pin contacts with two signal pins and an outer contact body. These contacts are used for 77 Ohm MIL-STD-1553 databus and 100 Ohm serial data transmission. The outer contact body provides a 360-degree EMI shield around the signal contacts. A raised boss on the contact body aligns the contact for proper mating. This boss fits into a slot inside the connector. All size 8 SuperNine and Mighty Mouse connector inserts have this alignment slot.

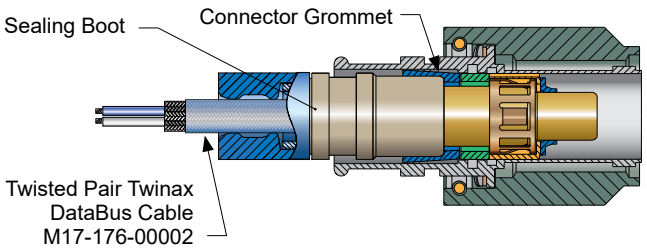

Sealing Boot Information

The sealing boot is necessary to prevent moisture and contamination from penetrating the connector. The sealing boot is ordered separately. DO NOT USE HEATSHRINK BOOT IF USING SEALING BOOT. The boot consists of a rigid dielectric sleeve and a fluorosilicone rubber grommet. After contact is installed slide boot forward into connector grommet to seal the contact cavity. "F" suffix on contact part number specifies contact supplied with sealing

© 2022 Glenair, Inc • 1211 Air Way, Glendale, CA 91201 • 818-247-6000 • www.glenair.com • U.S. CAGE code 06324 • SuperNine™ Catalog
Dimensions in Inches (millimeters) are subject to change without notice.

SuperNine® Contacts

MIL-DTL-38999 Series III Type

M39029 and Glenair signature contact solutions

8 DIFFERENTIAL TWINAX CONTACT 100 OHM CABLE

Gore RCN8945

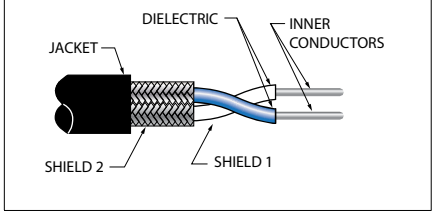

GSC-03-8I3971-00

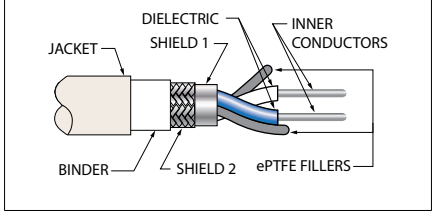

Raychem 10612

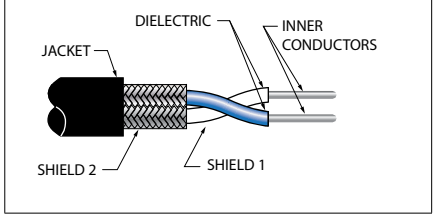

Raychem 0024A0024

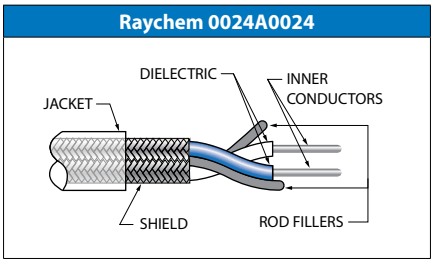

Tensolite 24463/9P025X-2 (LD) S280W502-1

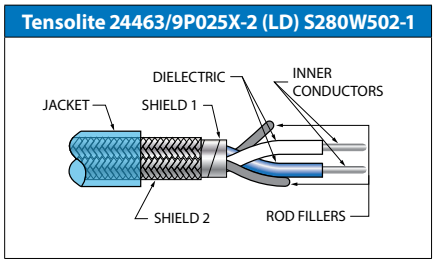

Cable Part Number	Gore RCN8945		Gore GSC-03-83971-00		Raychem 10612-24		Raychem 0024A0024		Tensolite 24463/9P025X-2 (LD) S280W502-1	
Impedance	100 ± 10		100 ±7		77 ± 5		100		100 ± 5.5 %	
Velocity of Propagation %	--		78		61		76		75	
Capacitance (pF/ft)	--		45 pF/ft.		30.0 pF/ft.		13.5 pF/ft.		13 pF/ft.	
Conductor Wire Size	AWG 24 (19/36) SPC[3]		AWG 24 (19/36) SCCA[1]		AWG 24 (19/36) SCCA[1]		AWG 24 (19/36) High-Strength SCCA[1]		AWG 24 (19/36) High-Strength SCCA[1]	
Dielectric	PTFE over ePTFE		FEP over expanded PTFE		Radiation-Crosslinked, Modified ETFE		Rayfoam H		PTFE over ePTFE	
Fillers	none		ePTFE		Radiation-Crosslinked Modified ETFE		Radiation-Crosslinked Modified ETFE		PTFE	
Shield	Shied 1: Aluminized Kapton		Shied 1: Aluminized Polyimide Foil		AWG 38 Tin-Coated Copper		38 AWG, Tin-Coated Copper		Shield 1: Flat Tin Coated Copper Braid	
	Shield 2: AWG 40 SPC[3] Braid		Shield 2: AWG 38 High Strength SSCA[1]						Shield 2: AWG 38A SPC[3] Braid	
Binder	None		ePTFE		None		None		None	
Jacket	Natural HSTF		FEP Color: White		Radiation-Crosslinked Modified ETFE Color: White		Modified FEP Color: Transparent White		Extruded FEP Color: Transparent Blue	
Outer Diameter	.162 (4.11) Max		0.13 (3.2)		.129 in (3.28)		.149 (3.78)		.150 (3.81)	
Temperature Rating	-55° C to + 200° C		-65° C to +200°C		150°C Max		- 55°C to +135°C		-55°C to 150° C	
Weight	TBD		27 g/m nominal		15.9 lbs/1000 ft (max)		18.1 lbs/1000 ft		19 lbs/1000 ft	
Max. Attenuation	Freq. (MHz)	dB/100 ft	Freq. (MHz)	dB/100 m	Freq. (MHz)	dB/100 ft	Freq. (MHz)	dB/100 ft	Freq. (MHz)	dB/75 ft
	100	6.7	1	2.7	1	1.4			6	1.8
	200	9.2	10	8.0						
	1000	22.0	20	11.2						
			100	25.2						

1. SCCA = silver-coated copper alloy 2. SPCA = silver-plated copper alloy 3. SPC = silver-plated copper

© 2022 Glenair, Inc • 1211 Air Way, Glendale, CA 91201 • 818-247-6000 • www.glenair.com • U.S. CAGE code 06324 • SuperNine™ Catalog
Dimensions in Inches (millimeters) are subject to change without notice.

SIZE #8 DIFFERENTIAL TWINAX CONTACT CABLE

M17/176-00002

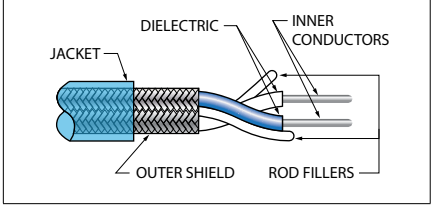

5M2022-003

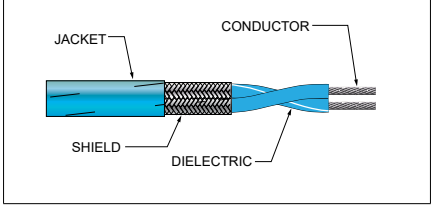

Belden 1350SB

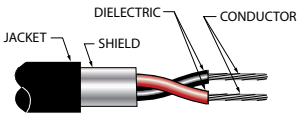

TE 252B0524

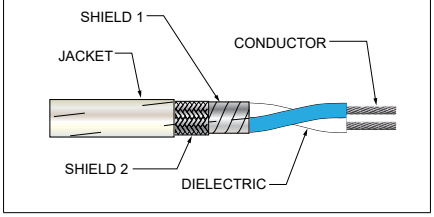

Cable Part Number	M17/176-00002		5M2022-003		Belden 1350SB		TE 252B0524	
Impedance	77 ± 3		75 ± 5		100		125 ± 10	
Velocity of Propagation %	71		55		79		78	
Capacitance	24 pF/ft.		24 pF/ft.		13.4 pF/ft.		11.0 pF/ft.	
Conductor Wire Size	AWG 24 (19/36) SCCA[1]		24 AWG (19/36) SPCA[2]		24 AWG (7/32) Tinned Copper		24 AWG, 19/36 High-Strength SCCA[1]	
Dielectric	PTFE		Extruded PTFE		PE		Rayfoam H	
Shield	Silver-Coated Copper Braid		38 AWG, SPC 90% Min. Coverage		Bi-Laminate Tape Beldfoil®		Aluminum Polyimide	
							AWG 38, Silver Coated Copper	
Jacket	Type XIII: PFA Color: Blue		Extruded FEP Color: Blue		.179 (4.55) LSZH, Color: Black		UXL - Modified ETFE	
Outer Diameter	.129 (3.28) ± .005 (0.13)		.128 (3.25)		***.179 (4.55)***			
Temperature Rating	-55° to +200°C		-65° C to +200° C		-30°C to +75°C		--	
Weight	.018 lb/ft		15.7 lb/1000 ft		20 lbs/1000 ft		22.7 lbs/1000ft	
Max. Attenuation	Freq. (MHz)	dB/100 ft	Freq. (MHz)	dB/100 ft	Freq. (MHz)	dB/100 ft	Freq. (MHz)	dB/100 ft
	1	1.4	1	1.5	.768	.88	10	2.0
	3	2.1			1.4112	1.18		
	4	2.4			2.048	1.371		
	5	2.8			3.072	1.6		
	7	3.5			6.144	2.09		
	10	4.5			12.288	2.84		
					24.576	4.01		

1. SCCA = silver-coated copper alloy 2. SPCA = silver-plated copper alloy

© 2022 Glenair, Inc • 1211 Air Way, Glendale, CA 91201 • 818-247-6000 • www.glenair.com • U.S. CAGE code 06324 • SuperNine™ Catalog
Dimensions in Inches (millimeters) are subject to change without notice.

SIZE #8 DIFFERENTIAL TWINAX CONTACT CABLE

Gore DXN2603 /TE 0028S2664

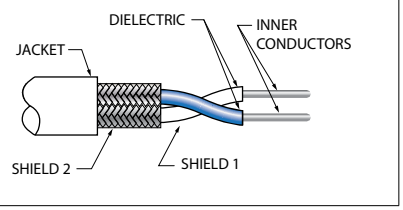

PIC E10222

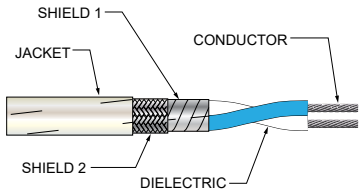

Glenair 963-102-30

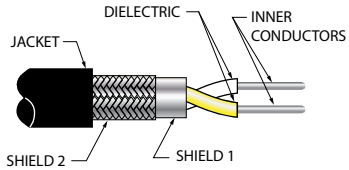

Gore GSC-05-84308-00

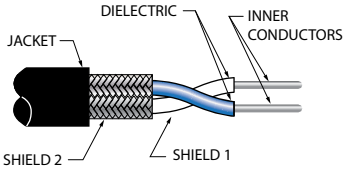

Gore DXN2602

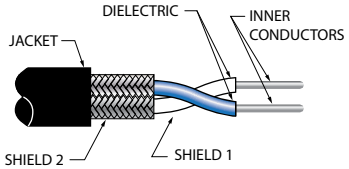

Cable Part Number	Gore DXN2603 / TE 0028S2664		PIC E10222		Glenair 963-102-30		Gore GSC-05-84308-00		Gore DXN2602	
Impedance	100 ± 10		100		100 ± 10		100 ± 4		100 ± 10	
Velocity of Propagation %	80		80.0		80.0		80.0		80	
Capacitance	13.0 pF/ft		13.0 pF/ft		15.0 pF/ft		45 (pF/m)		13.0 pF/ft	
SPCAConductor Wire Size	AWG 24 (19/36) SPCA[2]		AWG 22 stranded tin plated copper		AWG 30 (19/42) High-Strength SPCA[2]		AWG 26 (7/34) High-Strength SPCA[2]		AWG 24 (19/36) SPCA[2]	
Dielectric	PTFE over ePTFE		Foamed Fluoropolymer Insulation		PFA		ePTFE		PTFE over ePTFE	
Shield	AWG 40 SPC Braid		Sheild 1: Foil Shield Sheild 2: Tin-Plated Copper Braid Shield		Sheild 1: Aluminum/ Polyester Tape Sheild 2: AWG 40 High-Strength SPCA		AWG 40 Silver Plated copper 90% min		AWG 40 SPC Braid	
Jacket	EF100 PTFE Color: White		ETFE Color: White		PFA Color: Black		ETFE Color: Black		EF100 PTFE Color: White	
Outer Diameter			**0.19 (4.80)**		***.107 (2.72)***		0.12 (3.1)		.09 (2.29)	
Temperature Rating	-55°C to +200°C		-50°C to +150°C		105° C Max		-200°C to +180°C		-55°C to +200°C	
Weight	11.3 lbs/1000 ft		2.3 lbs/100 ft		N/A		18 g/m max.		11.3 lbs/1000 ft	
Max. Attenuation	Freq. (MHz)	dB/100 ft	Freq. (MHz)	dB/100 ft	Freq. (MHz)	dB/100 ft	Freq. (MHz)	dB/100 m	Freq. (MHz)	dB/100 ft
	100	7.6	10	1.5	500	40	20	17	100	7.6
	200	10.7	100	5.4	1000	56	35	22	200	10.7
	500	17.3					70	30	500	17.3
	1000	25.0					80	32	1000	25.0
							100	36		

1. SCC = silver-coated copper 2. SPCA = silver-plated copper alloy 3. SPC = silver-plated copper

© 2022 Glenair, Inc • 1211 Air Way, Glendale, CA 91201 • 818-247-6000 • www.glenair.com • U.S. CAGE code 06324 • SuperNine™ Catalog
Dimensions in Inches (millimeters) are subject to change without notice.

SIZE #8 QUADRAX CONTACTS

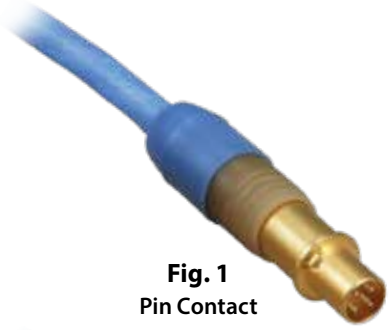

Fig. 1
Pin Contact
854-001



Fig. 2
Socket Contact
854-002

100 Ohm quadrax contacts accept standard flight-grade star quad cable. These snap-in, rear release contacts fit Glenair Series 800 through 805 Mighty Mouse connectors (not compatible with Series 806) with size #8 keyed insulators to properly align contact. Crimp termination. Contact has in-line key for alignment in connector. Gold-plated copper alloy , thermoplastic insulators. Supplied as unassembled kit.

Figure	Cable Accommodation	Contact Type	Part Number Contact Only	P/N Contact and Sealing Boot	Wire AWG	Cable OD
1	Tensolite NF22Q100 Draka F-4704-7	Pin	854-001-05	854-001-05F	22	.190 (4.83)
1	PIC E51424 Tensolite NF24Q100	Pin	854-001-02	854-001-02F	24	.163 (4.14)
1	PIC E50424 Draka F 4704-4	Pin	854-001-04	854-001-04F	24	.175 (4.44)
1	PIC E51426 Tensolite NF26Q100	Pin	854-001-01	854-001-01F	26	.143 (3.63)
1	Draka F 4704-6	Pin	854-001-03	854-001-03F	26	.149 (3.78)
2	Tensolite NF22Q100 Draka F-4704-7	Socket	854-002-05	854-002-05F	22	.190 (4.83)
2	PIC E51424 Tensolite NF24Q100	Socket	854-002-02	854-002-02F	24	.163 (4.14)
2	PIC E50424 Draka F 4704-4	Socket	854-002-04	854-002-04F	24	.175 (4.44)
2	PIC E51426 Tensolite NF26Q100	Socket	854-002-01	854-002-01F	26	.143 (3.63)
2	Draka F 4704-6	Socket	854-002-03	854-002-03F	26	.149 (3.78)

Material And Finish	
Contact Body, Inner Contact	Copper Alloy / Gold Plated
Crimp Ferrule	Brass or Equivalent / Gold Plated
Insulator	PTFE, Polyetherimide or equivalent
Sealing Boot Grommet	Fluorosilicone
Grommet Follower	Polyetherimide

Contact Specifications	
Characteristic Impedance	100 Ohms ± 10 Ohms
Frequency Range	DC – 3 GHz
Insulation Resistance, Ambient Temperature	5000 megOhms minimum
Contact Resistance – Inner Contact	15.0 milliOhms maximum initial @ 1ampere
Contact Resistance – Outer Contact	3.0 milliOhms maximum initial @ 12 amperes
Dielectric Withstanding Voltage	1000 Vac RMS between contacts, 500 Vac RMS between contacts and shell
Temperature Range	-65°C to +200°C
Durability	500 mating cycles
Corrosion (salt Fog)	EIA-364-26, condition B, 48 hours
Vibration	EIA-364-28, condition VI, letter J, 43g's
Shock	EIA-364-27, condition D, 300g's

© 2022 Glenair, Inc • 1211 Air Way, Glendale, CA 91201 • 818-247-6000 • www.glenair.com • U.S. CAGE code 06324 • SuperNine™ Catalog
Dimensions in Inches (millimeters) are subject to change without notice.

SuperNine® Contacts

MIL-DTL-38999 Series III Type

M39029 and Glenair signature contact solutions

SIZE #8 QUADRAX CONTACTS

854-001 Pin

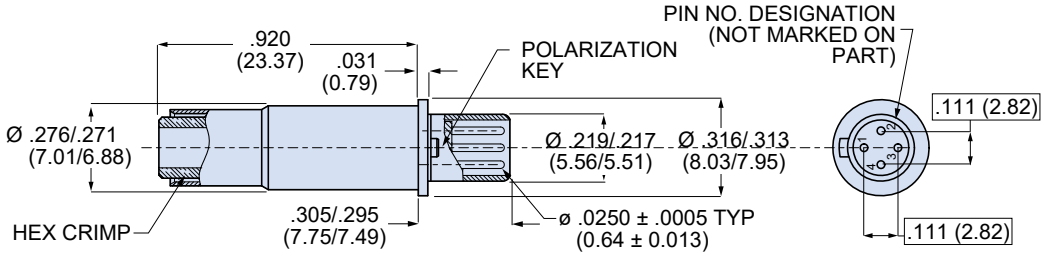

854-002 Socket

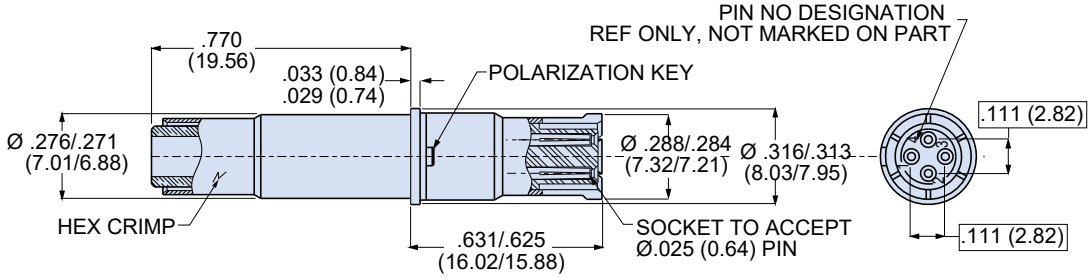

Arinc 664 Star Quad Cable



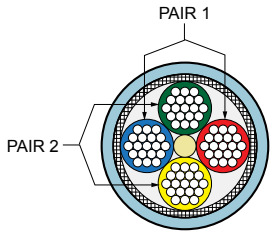

About Quadrax Contacts and Star Quad Cable

Quadrax contacts are size 8 multi-pin contacts with four signal pins and an outer contact body. These contacts are used for ARINC 664 100BASE-T Ethernet. Each quadrax contact yields one Ethernet port. The outer contact body provides a 360-degree EMI shield around the signal contacts. Star quad cables have four parallel wires uniformly twisted around a center filler. These 100 Ohm high performance 100BASE-T cables are designed for use in aircraft systems. The cable has two shields– a flat tinned copper braid inner shield and an outer tinned copper overbraid. The FEP jacket meets FAA flammability requirements.

Sealing Boot

Optional sealing boot is recommended. Slide boot onto wire before terminating contact. After contact is installed in connector, slide boot forward into connector grommet to seal the contact cavity. "F" suffix on contact part number specifies contact supplied with 859-042-02 sealing boot.

Dimensions		
Wire Dia. (in.)	Wire Dia. (mm.)	Part Number
.090 - .130	2.3 - 3.3	859-042-01
.130 - .170	3.3 - 4.3	859-042-02
.170 - .205	4.3 - 5.2	859-042-03



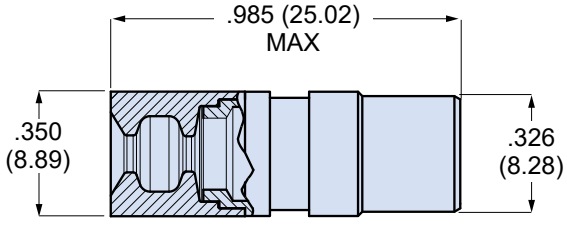

© 2022 Glenair, Inc • 1211 Air Way, Glendale, CA 91201 • 818-247-6000 • www.glenair.com • U.S. CAGE code 06324 • SuperNine™ Catalog
Dimensions in Inches (millimeters) are subject to change without notice.

SuperNine® Contacts

MIL-DTL-38999 Series III Type

M39029 and Glenair signature contact solutions

SIZE #8, 100 OHM QUADRAX CONTACT CABLE

Tensolite NF22Q100 (Draka F-4704-7)

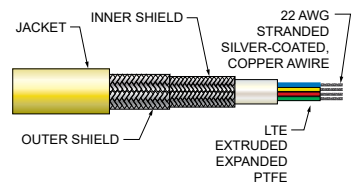

PIC E51424

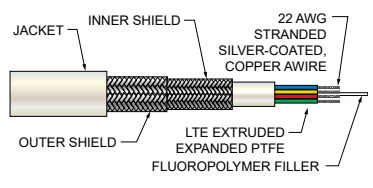

PIC E50424 or Draka F 4704-4

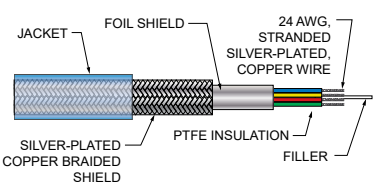

PIC E51426 or Tensolite NF26Q100

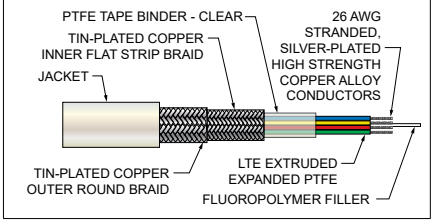

Draka F 4704-6

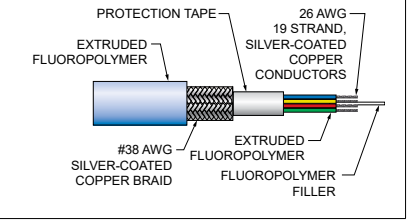

Cable Part Number	Tensolite NF22Q100 (Draka F-4704-7)		PIC E51424		PIC E50424 Draka F 4704-4		PIC E51426 Tensolite NF26Q100		Draka F 4704-6	
Impedance	100		100		100		100		100	
Velocity of Propagation %	80.0		80.0		69.5		70.0		65	
Capacitance (pF/ft)	13.0		13.0		13.0		14.5		--	
Conductor Wire Size	AWG 22		AWG 24		AWG 24		AWG 26		26	
Conductor Material	SCC[1]		Stranded SPCA[2]		Stranded SPC[3]		Stranded SPCA[2]		19 Strand SCC[1]	
Dielectric	PTFE		Fluoropolymer		PTFE		Fluoropolymer		Fluoropolymer	
Inner Shield Coverage	--		90% Braid		100% Foil		90% Braid		--	
Outer Shield Coverage	--		85 Braid		85% Braid		85 Braid		--	
Pair #1	Red, Blue		Red, Blue		Red, Blue		Red, Blue		Red, Blue	
Pair #2	Yellow, Green		Yellow, Green		Yellow, Green		Yellow, Green		Yellow, Green	
Jacket	FEP		ETFE		Fluoropolymer		ETFE		Extruded Fluoropolymer	
Outer Diameter	.190 (4.83)		0.16 (4.06)		.17 (4.32)		0.14 (3.48)		--	
Temperature Rating	-55°C to 200°C		-55°C to 150°C		-55°C to 200°C		-55°C to 150°C		-65°C to 125°C	
Weight	34.5 lbs/1000 ft		2.2 lbs/100 ft		2.7 lbs/100 ft		1.8 lbs/100 ft		--	
Max. Attenuation	Freq. (MHz)	dB/100 ft	Freq. (MHz)	dB/100 ft	Freq. (MHz)	dB/100 ft	Freq. (MHz)	dB/100 ft	Freq. (MHz)	dB/100 ft
			10	2.3/2.7	10	2.2/3.0	10	2.8/3.2	1	.092
	100	6.4/7.3	100	8.0/9.2	100	7.1/8.2	100	9.6/11.0	4	1.83
									10	2.75
									16	3.66
									20	4.27
									62.5	7.62
									100	9.15

1. SCC = silver-coated copper 2. SPCA = silver-plated copper alloy 3. SPC = silver-plated copper

© 2022 Glenair, Inc • 1211 Air Way, Glendale, CA 91201 • 818-247-6000 • www.glenair.com • U.S. CAGE code 06324 • SuperNine™ Catalog
Dimensions in Inches (millimeters) are subject to change without notice.

THERMOCOUPLE CONTACTS



How-To-Order Thermocouple Contacts					
Type	Mating End Size	Wire Accomodation	Glenair Part Number	Material	Finish
Pin	23	22-28 AWG	857-104A	KN	None
	23	22-28 AWG	857-104C	KP	None
	22	22-28 AWG	850-181-22-470	JN	None
	22	22-28 AWG	850-181-22-471	KN	None
	22	22-28 AWG	850-181-22-472	KP	None
	22	22-28 AWG	850-181-22-473	JP	Cadmium Plate*
	20	20-24 AWG	850-181-20-474	JN	None
	20	20-24 AWG	850-181-20-475	KN	None
	20	20-24 AWG	850-181-20-476	KP	None
	20	20-24 AWG	850-181-20-477	JP	Cadmium Plate*
	16	16-20 AWG	850-181-16-478	JN	None
	16	16-20 AWG	850-181-16-479	KN	None
	16	16-20 AWG	850-181-16-480	KP	None
	16	16-20 AWG	850-181-16-481	JP	Cadmium Plate*
Socket	23	22-28 AWG	857-105A	KN	None
	23	22-28 AWG	857-105C	KP	None
	22	22-28 AWG	850-183-22-482	JN	None
	22	22-28 AWG	850-183-22-483	KN	None
	22	22-28 AWG	850-183-22-484	KP	None
	22	22-28 AWG	850-183-22-485	JP	Cadmium Plate*
	20	20-24 AWG	850-183-20-486	JN	None
	20	20-24 AWG	850-183-20-487	KN	None
	20	20-24 AWG	850-183-20-488	KP	None
	20	20-24 AWG	850-183-20-489	JP	Cadmium Plate*
	16	16-20 AWG	853-183-16-490	JN	None
	16	16-20 AWG	853-183-16-491	KN	None
	16	16-20 AWG	853-183-16-492	KP	None
	16	16-20 AWG	853-183-16-493	JP	Cadmium Plate*

* Chromate clear coat

Per AS39029 spec, the composition designations have been changed as listed below:

- JN =Type J negative (formerly constantan)
- KN =Type K negative (formerly alumel)
- KP =Type K positive (formerly chromel)
- JP =Type J positive (formerly iron)

MATERIAL AND FINISH

Thermocouple contacts: constanston, alumel, and chromel unplated, per ANSI 96.1. Iron contacts with cadmium finish
Socket contact hood: stainless steel, passivated per AMS-QQ-P-35.

© 2022 Glenair, Inc • 1211 Air Way, Glendale, CA 91201 • 818-247-6000 • www.glenair.com • U.S. CAGE code 06324 • SuperNine™ Catalog
Dimensions in Inches (millimeters) are subject to change without notice.

ADVANCED PERFORMANCE

SuperNine® Contacts

MIL-DTL-38999 Series III Type

M39029 and Glenair signature contact solutions

SIZE #12 PNEUMATIC CONTACTS



Cavity F contains a Pitot tube Socket contact

Stainless steel pneumatic contacts fit MIL-DTL-38999 connectors. Contacts snap into size #12 cavities. Attach to 3⁄32 inch (2.38) diameter tubing. Socket contact has fluorosilicone O-ring and PTFE backup washers. Originally designed for pitot tube connections, these pneumatic contacts are rated for 100 psi maximum air pressure. No installation tool is required. Remove contacts with plastic extraction tool 809-132 (M81969/14-04).



Contact Type	For Use In	Part Number
Pin	D38999 Type, All Series	830-003[1]

1. 830-003 supersedes 857-011



Contact Type	For Use In	Part Number
Socket	D38999 Type Series I, III, IV	830-005

SIZE #8 CAVITY OPTOELECTRONIC CONTACT

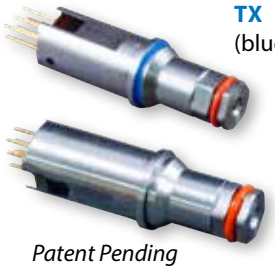

Patent Pending

Size 8 Cavity Optoelectronic contacts transmit and receive differential CML electrical signals over Multimode fiber optic cable. Transmitters consist of a laser driver with a temperature compensation circuit to maintain optical power over the entire operating temperature range, and a 850nm VCSEL laser. Receivers consist of an 850nm PIN Photo Detector, a Transimpedance Amplifier with automatic gain control circuit, and a Limiting Amplifier. Differential output data signals are CML compatible. The transmitter has a Tx Disable pin to turn off transmitter output and a Tx Fault pin to signal a fault condition. Receiver includes a CMOS compatible Loss of Signal Indicator to prevent invalid data.

MATERIAL/FINISH

Shell: 300CRES/Passivate or NM6
Seal: Silicone elastomer
Ferrule & sleeve: Zirconia ceramic
PC tails: Copper alloy/gold plated
PCB flex: FR4 & Polyimide
Solder type: RoHS compliant Sn95/Sb5 (232°C melting temp) & RoHS compliant Sn96.5/Ag3.0/Cu0.5 (217° melting)

How-To-Order Size 8 Transmitter Optoelectronic Contacts		
Type	Signal Type	Glenair Part Number
Transmitter	1.25 Gbps	050-301-01-T
	2.50 Gbps	050-301-02-T
	3.20 Gbps	050-301-03-T
	4.25 Gbps	050-301-04-T

How-To-Order Size 8 Receiver Optoelectronic Contacts		
Type	Signal Type	Glenair Part Number
Receiver	1.25 Gbps	050-301-01-R
	2.50 Gbps	050-301-02-R
	3.20 Gbps	050-301-03-R
	4.25 Gbps	050-301-04-R

© 2022 Glenair, Inc • 1211 Air Way, Glendale, CA 91201 • 818-247-6000 • www.glenair.com • U.S. CAGE code 06324 • SuperNine™ Catalog
Dimensions in Inches (millimeters) are subject to change without notice.

SuperNine® Contacts

MIL-DTL-38999 Series III Type

Crimp contact termination instructions

HOW TO TERMINATE, INSTALL, AND REMOVE CRIMP CONTACTS

1 ***Set Up Crimp Tool.*** Install proper positioner into crimp tool. The label on the positioner shows the proper tool setting for each wire size. Turn the adjustment wheel to the correct setting.

2 ***Strip Wire.*** Remove wire insulation, taking care to avoid nicking or cutting wire strands. Strip wire to proper length so wire is visible thru inspection hole.

3 ***Insert wire*** into contact. The wire should be visible in the inspection hole.

4 Insert contact into crimp tool as shown. Make sure that the contact is fully inserted into the tool. Squeeze handle completely. The ratchet mechanism will not allow a partial crimp. Release handle and remove contact.

5 ***Inspect crimped contact***. Wire should be fully inserted and the crimp should be uniform in appearance.

Insertion/Extraction Tool

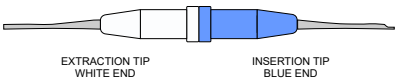

6 ***Install contact into connector***. Push the contact through the rear grommet until the contact locks into place. This can usually be done by hand without the need for a tool. If the wire gage is #26 or smaller, a tool is helpful. There are two techniques for installing contacts with a tool. One method is to push the contact in by hand, then use the tool to finish the insertion. The other method is to position the insertion tip against the contact shoulder, then insert the contact. Use insertion/extraction tool 809-088 to install contacts. Slide the wire into the groove on the blue end of the tool. Slide the tool tip up the contact until it touches the contact shoulder. **USE CARE TO AVOID DAMAGING THE CONNECTOR.**

7 ***Contact Extraction.*** Use tool M81969/14-01. The white end is used for contact extraction. First, push the wire into the groove of the metal tip. Slide the tip of the tool into the connector. Push the tool into the connector cavity until the tip bottoms in the connector. Avoid wiggling or rocking the tip. This may damage the cavity. A straight push is best. Pinch the wire between your finger and the white plastic grip and slide the tool and contact out of the connector. **Wire insulation diameter greater than 0.045 inches (1.14mm) is too large to work properly with the extraction tool. Connector damage is possible.**

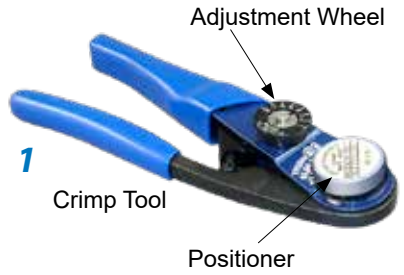

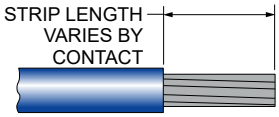

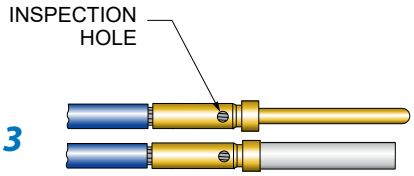

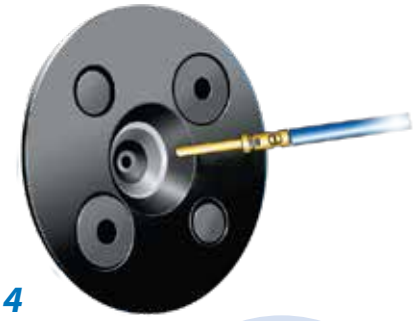

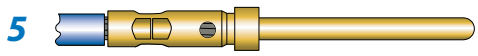

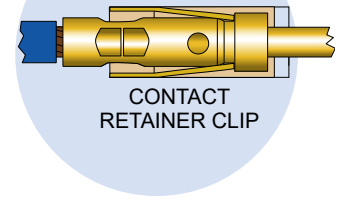

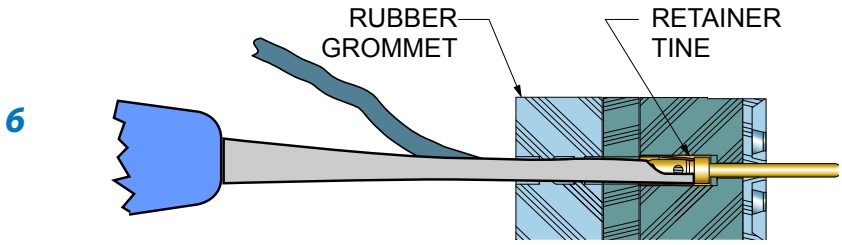

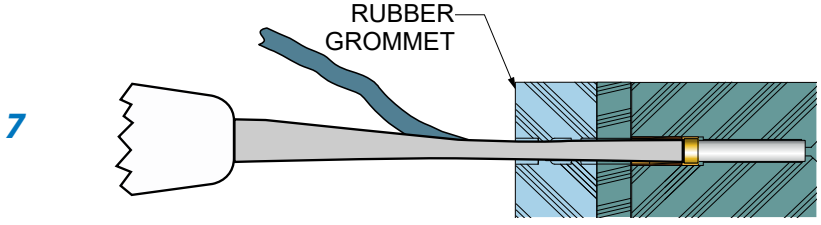

© 2022 Glenair, Inc • 1211 Air Way, Glendale, CA 91201 • 818-247-6000 • www.glenair.com • U.S. CAGE code 06324 • SuperNine™ Catalog
Dimensions in Inches (millimeters) are subject to change without notice.

SuperNine® Weight/cost-saving MIL-DTL-38999 Series III Type

Signal and power crimp contact tool cross reference

Signal Crimp Contacts						
Size	Gender	Contact Part Number	Crimp Tool	Positioner	Insertion Tool	Extraction Tool
D38999 QPL and Commercial Contacts						
23	Pin	M39029/122-670	**809-015** M22520/2-01	**859-210** M22520/2-13	**859-163** M81969/1-05	**859-163** M81969/1-05
23	Skt	M39029/121-663	**809-015** M22520/2-01	**859-211** M22520/2-16	**859-163** M81969/1-05	**859-163** M81969/1-05
22	Pin	**850-002-22-360** M39029/58-360	**809-015** M22520/2-01	**859-018** M22520/2-09	**859-020** M81969/14-01	**859-020** M81969/14-01
22	Skt	**850-001-22-348** M39029/56-348	**809-015** M22520/2-01	**809-369** M22520/2-07	**859-020** M81969/14-01	**859-020** M81969/14-01
20	Pin	**850-002-20-363** M39029/58-363	**809-015** M22520/2-01	M22520/2-10	**809-207** M81969/14-10	**809-207** M81969/14-10
			809-136 M22520/1-01	**809-137** M22520/1-04 (Red)		
20	Skt	**800-001-20-351** M39029/56-351	**809-015** M22520/2-01	M22520/2-10	**809-207** M81969/14-10	**809-207** M81969/14-10
			809-136 M22520/1-01	**809-137** M22520/1-04 (Red)		
16	Pin	**850-002-16-364** M39029/58-364	**809-136** M22520/1-01	**809-137** M22520/1-04 (Blue)	**809-131** M81969/14-03	**809-131** M81969/14-03
16	Skt	**850-001-16-352** M39029/56-352	**809-136** M22520/1-01	**809-137** M22520/1-04 (Blue)	**809-131** M81969/14-03	**809-131** M81969/14-03
12	Pin	**850-002-12-365** M39029/58-365	**809-136** M22520/1-01	**809-137** M22520/1-04 (Yellow)	**809-132** M81969/14-04	**809-132** M81969/14-04
12	Skt	**850-001-12-353** M39029/56-353	**809-136** M22520/1-01	**809-137** M22520/1-04 (Yellow)	**809-132** M81969/14-04	**809-132** M81969/14-04
Thermocouple Contacts						
23	Pin	**857-104**	**809-015** M22520/2-01	**859-210** M22520/2-13	**859-163** M81969/1-05	**859-163** M81969/1-05
23	Skt	**857-105**	**809-015** M22520/2-01	**859-211** M22520/2-16	**859-163** M81969/1-05	**859-163** M81969/1-05
22	Pin	**850-181-22**	**809-015** M22520/2-01	**859-018** M22520/2-09	**859-020** M81969/14-01	**859-020** M81969/14-01
22	Skt	**850-183-22**	**809-136** M22520/2-01	**809-369** M22520/2-07	**859-020** M81969/14-01	**809-020** M81969/14-01
20	Pin	**850-181-20**	**809-015** M22520/2-01	M22520/2-10	**809-207** M81969/14-10	**809-207** M81969/14-10
20	Skt	**850-183-20**	**809-015** M22520/2-01	M22520/2-10	**809-207** M81969/14-10	**809-207** M81969/14-10
16	Pin	**850-181-16**	**809-136** M22520/1-01	**809-137** M22520/1-04 (Blue)	**809-131** M81969/14-03	**809-131** M81969/14-03
16	Skt	**850-183-16**	**809-136** M22520/1-01	**809-137** M22520/1-04 (Blue)	**809-131** M81969/14-03	**809-131** M81969/14-03

© 2022 Glenair, Inc • 1211 Air Way, Glendale, CA 91201 • 818-247-6000 • www.glenair.com • U.S. CAGE code 06324 • SuperNine™ Catalog
Dimensions in Inches (millimeters) are subject to change without notice.

Rev 07.01.2024

SuperNine® Weight/cost-saving MIL-DTL-38999 Series III Type

Signal and power crimp contact tool cross reference

Signal Crimp Contacts						
Size	**Gender**	**Contact Part Number**	**Crimp Tool**	**Positioner**	**Insertion Tool**	**Extraction Tool**
Extended Durability D38999 Contacts						
22	Pin	**850-007-22-620** M39029/107-620	**809-015** M22520/2-01	**859-018** M22520/2-09	**859-020** M81969/14-01	**859-020** M81969/14-01
22	Skt	**850-006-22-614** M39029/106-614	**809-015** M22520/2-01	**809-369** M22520/2-07	**859-020** M81969/14-01	**859-020** M81969/14-01
20	Pin	**850-007-20-621** M39029/107-621	**809-136** M22520/1-01	**809-137** M22520/1-04 (Red)	**809-207** M81969/14-10	**809-207** M81969/14-10
			809-015 M22520/2-01	M22520/2-10		
20	Skt	**850-006-20-615** M39029/106-615	**809-136** M22520/1-01	M22520/2-10	**809-207** M81969/14-10	**809-207** M81969/14-10
			809-015 M22520/2-01	M22520/2-10		
16	Pin	**850-007-16-622** M39029/107-622	**809-136** M22520/1-01	**809-137** M22520/1-04 (blue)	**809-131** M81969/14-03	**809-131** M81969/14-03
16	Skt	**850-006-16-616** M39029/106-616	**809-136** M22520/1-01	**809-137** M22520/1-04 (blue)	**809-131** M81969/14-03	**809-131** M81969/14-03
12	Pin	**850-007-12-623** M39029/107-623	**809-136** M22520/1-01	**809-137** M22520/1-04 (yellow)	**809-132** M81969/14-04	**809-132** M81969/14-04
12	Skt	**850-006-12-617** M39029/106-617	**809-136** M22520/1-01	**809-137** M22520/1-04 (yellow)	**809-132** M81969/14-04	**809-132** M81969/14-04
SuperNine 233-205 and 233-206 Extended Durability Connector Contacts						
23	Pin	**857-189** (AS39029/18 Type)	**809-015** M22520/2-01	**859-210** M22520/2-13	M81969/1-05	M81969/1-05
23	Skt	**857-190** (AS39029/17 Type)	**809-015** M22520/2-01	M22520/2-16	M81969/1-05	M81969/1-05
22	Pin	**857-151-22** (IAW M39029/58-360)	**809-015** M22520/2-01	**859-018** M22520/2-09	**859-020** M81969/14-01	**859-020** M81969/14-01
22	Skt	**857-150-22** (IAW M39029/56-348)	**809-015** M22520/2-01	**809-369** M22520/2-07	**859-020w** M81969/14-01	**859-020** M81969/14-01
20	Pin	**857-151-20** (IAW M39029/58-363)	**809-015** M22520/2-01	M22520/2-10	**809-207** M81969/14-10	**809-207** M81969/14-10
			809-136 M22520/1-01	**809-137** M22520/1-04 (Red)		
20	Skt	**857-150-20** (IAW M39029/56-351)	**809-015** M22520/2-01	M22520/2-10	**809-207** M81969/14-10	**809-207** M81969/14-10
			809-136 M22520/1-01	**809-137** M22520/1-04 (Red)		
16	Pin	**857-151-16** (IAW M39029/58-364)	**809-136** M22520/1-01	**809-137** M22520/1-04 (Blue)	**809-131** M81969/14-03	**809-131** M81969/14-03
16	Skt	**857-150-16** (IAW M39029/56-352)	**809-136** M22520/1-01	**809-137** M22520/1-04 (Blue)	**809-131** M81969/14-03	**809-131** M81969/14-03
12	Pin	**857-151-12** (IAW M39029/58-365)	**809-136** M22520/1-01	**809-137** M22520/1-04 (Yellow)	**809-132** M81969/14-04	**809-132** M81969/14-04
12	Skt	**857-150-12** (IAW M39029/56-353)	**809-136** M22520/1-01	**809-137** M22520/1-04 (Yellow)	**809-132** M81969/14-04	**809-132** M81969/14-04

© 2022 Glenair, Inc • 1211 Air Way, Glendale, CA 91201 • 818-247-6000 • www.glenair.com • U.S. CAGE code 06324 • SuperNine™ Catalog
Dimensions in Inches (millimeters) are subject to change without notice.

Rev 10.23.2024

SuperNine® Weight/cost-saving MIL-DTL-38999 Series III Type

RF crimp contact tool cross reference

Shielded Contact Assembly Tools									
					Inner Contact		Cable Shield Hex		Insertion/ Removal Tool
Contact P/N	Cable Accomodated		Gender	Size	Tool	Positioner	Tool	Hex Die	
852-008 M39029/76	RG174, RG316, RG178, RG179		Pin	16	**809-015** M22520/2-01	**809-125** M22520/2-35	**809-127** M22520/4-01	**809-126** M22520/4-02	**809-131** M81969/14-03
852-009 M39029/77	RG174, RG316, RG178, RG179		Skt	16	**809-015** M22520/2-01	**809-125** M22520/2-35	**809-127** M22520/4-01	**809-126** M22520/4-02	**809-131** M81969/14-03
852-004 M39029/102	RG174, RG179, RG180, RG316		Pin	12	**809-015** M22520/2-01	**859-240** M22520/2-37	**809-129** M22520/5-01	**809-130** M22520/5-03	**809-132** M81969/14-04
852-005 M39029/103	RG174, RG179, RG180, RG316		Skt	12	**809-015** M22520/2-01	**859-123** K1457 (DMC)	**809-129** M22520/5-01	**809-130** M22520/5-03	**809-132** M81969/14-04
852-006 M39029/59-366	RG180		Skt	8	**809-015** M22520/2-01	**859-050** M22520/2-31	**809-129** M22520/5-01	**859-051** M22520/5-05	**859-049** M81969/14-12 Removal
852-007 M39029/60-367	RG180		Pin	8	**809-015** M22520/2-01	**859-050** M22520/2-31	**809-129** M22520/5-01	**859-051** M22520/5-05	**859-049** M81969/14-12 Removal
852-082-XX	Dash: -01	PIC Cable: V78209	Pin	8	**809-015** M22520/2-01	**859-240** M22520/2-37	**809-129** M22520/5-01	**859-007** M22520/5-45	**859-049** M81969/14-12 Removal
	Dash: -02	Times Microwave LMR-240-75		8	**809-015** M22520/2-01	**859-240** M22520/2-37	**809-129** M22520/5-01	**859-007** M22520/5-45	
	Dash: -03	Falmat: Deep Mini RG59 P/N: FM030115-4		8	**809-015** M22520/2-01	**859-240** M22520/2-37	**809-129** M22520/5-01		
852-083-XX	Dash: -01	PIC Cable: V78209	Skt	8	**809-015** M22520/2-01	**859-240** M22520/2-37	**809-129** M22520/5-01	**859-007** M22520/5-45	**859-049** M81969/14-12 Removal
	Dash: -02	Times Microwave LMR-240-75		8	**809-015** M22520/2-01	**859-240** M22520/2-37	**809-129** M22520/5-01	**859-007** M22520/5-45	
	Dash: -03	Falmat: Deep Mini RG59 P/N: FM030115-4		8	**809-015** M22520/2-01	**859-240** M22520/2-37	**809-129** M22520/5-01		
852-030-XX	Dash: -01	M17/152-00001 (RG316DS),	Skt	8	Solder Contact		**809-129** M22520/5-01	**809-130** M22520/5-03	
	Dash: -02	M17/113-RG316		8			**809-129** M22520/5-01	**809-130** M22520/5-03	
	Dash: -03	M17/060-RG142; M17/12/-RG400		8			**809-129** M22520/5-01	**859-047 or 859-007** M22520/5-45	
	Dash: -04	M17/28-RG58		8			**809-129** M22520/5-01	**859-047 or 859-007** M22520/5-45	
852-031-XX	Dash: -01	M17/152-00001 (RG316DS),	Pin	8	Solder Contact		**809-129** M22520/5-01	**809-130** M22520/5-03	**859-049** M81969/14-12 Removal
	Dash: -20	M17/113-RG316		8			**809-129** M22520/5-01	**809-130** M22520/5-03	
	Dash: -03	M17/060-RG142; M17/12/-RG400		8			**809-129** M22520/5-01	**859-047 or 859-007** M22520/5-45	
	Dash: -04	M17/28-RG58		8			**809-129** M22520/5-01	**859-047 or 859-007** M22520/5-45	

© 2022 Glenair, Inc • 1211 Air Way, Glendale, CA 91201 • 818-247-6000 • www.glenair.com • U.S. CAGE code 06324 • SuperNine™ Catalog
Dimensions in Inches (millimeters) are subject to change without notice.

SuperNine® Weight/cost-saving MIL-DTL-38999 Series III Type

RF crimp contact tool cross reference

Shielded Contact Assembly Tools									
					Inner Contact		Cable Shield Hex		Insertion/ Removal Tool
Contact P/N	Cable Accomodated		Gender	Size	Tool	Positioner	Tool	Hex Die	
852-042	LLSB-200, and LMR-195		Skt	8	Solder Contact		809-129 M22520/5-01	859-051 M22520/5-05	859-049 M81969/14-12 Removal
852-043	LLSB-200, and LMR-195		Pin	8	Solder Contact		809-129 M22520/5-01	859-007 or 859-047 M22520/5-45	859-049 M81969/14-12 Removal
852-056 75 ohm	Dash: -01	V75268, V76261, V73263	Pin	8	809-015 M22520/2-01	859-072 809-240 M22520/2-37	809-129 M22520/5-01	859-007 or 859-047 M22520/5-45	859-049 M81969/14-12 Removal
	Dash: -02	RG179		8	809-015 M22520/2-01	859-072 809-240 M22520/2-37	809-129 M22520/5-01	809-130 M22520/5-03	
852-057 75 ohm	Dash: -01	V75268, V76261, V73263	Skt	8	809-015 M22520/2-01	859-072 809-240 M22520/2-37	809-129 M22520/5-01	859-007 or 859-047 M22520/5-45	859-049 M81969/14-12 Removal
	Dash: -02	RG179		8	809-015 M22520/2-01	859-072 809-240 M22520/2-37	809-129 M22520/5-01	809-130 M22520/5-03	
853-003 (M39029/113)	M17/176-00002		Pin	8	809-015 M22520/2-01	859-072 809-240 M22520/2-37	809-129 M22520/5-01	859-048 M22520/5-105	859-049 M81969/14-12 Removal
853-004 (M39029/114)	M17/176-00002		Skt	8	809-015 M22520/2-01	859-072 809-240 M22520/2-37	809-129 M22520/5-01	859-048 M22520/5-105	859-049 M81969/14-12 Removal
853-013	M17/176-00002		Skt	8	809-015 M22520/2-01	859-072 809-240 M22520/2-37	809-129 M22520/5-01	859-007 or 859-047 M22520/5-45	859-049 M81969/14-12 Removal
853-014	M17/176-00002		Pin	8	809-015 M22520/2-01	859-072 809-240 M22520/2-37	809-129 M22520/5-01	859-007 or 859-047 M22520/5-45	859-049 M81969/14-12 Removal
853-017	Raychem EPD 32263		Skt	8	809-015 M22520/2-01	859-072 809-240 M22520/2-37	809-129 M22520/5-01	859-007 or 859-047 M22520/5-45	859-049 M81969/14-12 Removal
853-018	Raychem EPD 32263		Pin	8	809-015 M22520/2-01	859-072 809-240 M22520/2-37	809-129 M22520/5-01	859-007 or 859-047 M22520/5-45	859-049 M81969/14-12 Removal
853-024-XX	Dash: -01	McDonnell Douglas ST5M1212-002	Skt	8	809-015 M22520/2-01	859-072 809-240 M22520/2-37	809-129 M22520/5-01	859-007 or 859-047 M22520/5-45	859-049 M81969/14-12 Removal
	Dash: -02	Raychem 7726D0664							
853-025-XX	Dash: -01	Raychem 7726D0664	Pin	8	809-015 M22520/2-01	859-072 809-240 M22520/2-37	809-129 M22520/5-01	859-007 or 859-047 M22520/5-45	859-049 M81969/14-12 Removal
	Dash: -02	McDonnell Douglas ST5M1212-002							

© 2022 Glenair, Inc • 1211 Air Way, Glendale, CA 91201 • 818-247-6000 • www.glenair.com • U.S. CAGE code 06324 • SuperNine™ Catalog
Dimensions in Inches (millimeters) are subject to change without notice.

SuperNine® Weight/cost-saving MIL-DTL-38999 Series III Type

RF crimp contact tool cross reference

Shielded Contact Assembly Tools									
					Inner Contact		Cable Shield Hex		Insertion/ Removal Tool
Contact P/N	Cable Accomodated		Gender	Size	Tool	Positioner	Tool	Hex Die	
854-001-XX	Dash: -01	Tensolite NF26Q100	Pin	8	809-015 M22520/2-01	859-072 809-240 M22520/2-37	809-129 M22520/5-01	859-007 or 859-047 M22520/5-45	859-049 M81969/14-12 Removal
	Dash: -02	Tensolite NF24Q100, PIC E51424		8	809-015 M22520/2-01	859-072 809-240 M22520/2-37	809-129 M22520/5-01	859-007 or 859-047 M22520/5-45	
	Dash: -03	Draka Fileca F 4704-6		8	809-015 M22520/2-01	859-072 809-240 M22520/2-37	809-129 M22520/5-01	859-007 or 859-047 M22520/5-45	
	Dash: -04	Draka Fileca F 4704-4		8	809-015 M22520/2-01	859-072 809-240 M22520/2-37	809-129 M22520/5-01	859-007 or 859-047 M22520/5-45	
	Dash: -05	Tensolite NF22Q100		8	809-015 M22520/2-01	859-072 809-240 M22520/2-37	809-129 M22520/5-01	859-007 or 859-047 M22520/5-45	
854-002-XX	Dash: -01	Tensolite NF26Q100	Skt	8	809-015 M22520/2-01	859-072 809-240 M22520/2-37	809-129 M22520/5-01	859-007 or 859-047 M22520/5-45	859-049 M81969/14-12 Removal
	Dash: -02	Tensolite NF24Q100, PIC E51424		8	809-015 M22520/2-01	859-072 809-240 M22520/2-37	809-129 M22520/5-01	859-007 or 859-047 M22520/5-45	
	Dash: -03	Draka Fileca F 4704-6		8	809-015 M22520/2-01	859-072 809-240 M22520/2-37	809-129 M22520/5-01	859-007 or 859-047 M22520/5-45	
	Dash: -04	Draka Fileca F 4704-4		8	809-015 M22520/2-01	859-072 809-240 M22520/2-37	809-129 M22520/5-01	859-007 or 859-047 M22520/5-45	
	Dash: -05	Tensolite NF22Q100		8	809-015 M22520/2-01	859-072 809-240 M22520/2-37	809-129 M22520/5-01	859-007 or 859-047 M22520/5-45	

- Inner contacts, outer contact, ferrules, retaining nut: copper alloy, 50 microinches gold over nickel plating
- Insulators:
  El Ochito® White: PPS, natural color
  El Ochito® Blue: low-dielectric constant thermoplastic, blue
  El Ochito® Red: low-dielectric constant thermoplastic, red
- O-ring: fluorosilicone
- Heatshrink tubing: PVDF
- Contact release sleeve: stainless steel, passivated
- Sealing boot grommet: fluorosilicone
- Sealing boot body: rigid thermoplastic, PEI or equivalent
- Spline, El Ochito® White: copper alloy, nickel plating
- Spline, El Ochito® Red and Blue: Polyimide

© 2022 Glenair, Inc • 1211 Air Way, Glendale, CA 91201 • 818-247-6000 • www.glenair.com • U.S. CAGE code 06324 • SuperNine™ Catalog
Dimensions in Inches (millimeters) are subject to change without notice.

ADVANCED PERFORMANCE

SuperNine® High-Speed Series

MIL-DTL-38999 Series III Type Environmental Connectors

El Ochito® octaxial "White," "Blue," and "Red" contact specifications

Ochito "White"



1000BASE-T/10GBASE-T

El Ochito® "White" octaxial contacts provide 10 Gigabit Ethernet in the same size as 100BASE-T Quadrax contact

- **-65°C to +175°C**
- **100 ohms**
- **24 and 26 AWG**
- **Type I and Type II**

Ochito "Blue"



SuperSpeed USB

Low-dielectric material. Up to 5 Gbps. 90 ohms. El Ochito® "Blue" octaxial contacts provide an aerospace-grade solution for SuperSpeed USB.

- **-65°C to +125°C**
- **90 ohms**
- **Type I only**

Ochito "Red"



HDMI, Displayport, SATA

Low-dielectric material. Up to 5 Gbps. 100 ohms. El Ochito® "Red" octaxial contacts provide an aerospace-grade solution for multi-gigabit data rates.

- **-65°C to +125°C**
- **100 ohms**
- **26 AWG**
- **Type I only**

Specifications

Specifications

- **Operating temperature**:
  El Ochito® White: -65° to +175°C
  El Ochito® Blue: -65° to +125°C
  El Ochito® Red: -65° to +125°C
- **Impedance**:
  El Ochito® White: 100 ohms
  El Ochito® Blue: 90 ohms
  El Ochito® Red: 100 ohms
- **DWV:** 500 Vrms
- **Current Rating:** 1.5 A
- **IR:** 5000 megohms min.
- **Durability:** 500 mating cycles
- **Vibration:** MIL-DTL-38999 Series III
- **Shock:** MIL-DTL-38999 Series III

Construction

- **Inner contacts, outer contact, ferrules, retaining nut:** copper alloy, 50 microinches gold over nickel plating
- **Insulators:**
  El Ochito® White: PPS, natural color
  El Ochito® Blue: low-dielectric constant thermoplastic, blue
  El Ochito® Red: low-dielectric constant thermoplastic, red
- **O-ring:** fluorosilicone
- **Heatshrink tubing:** PVDF
- **Contact release sleeve:** stainless steel, passivated
- **Sealing boot grommet:** fluorosilicone
- **Sealing boot body:** rigid thermoplastic, PEI or equivalent
- **Spline, El Ochito® White:** copper alloy, nickel plating
- **Spline, El Ochito® Red and Blue:** Polyimide

Contact and Cable Options

Wire Size	Cable Type	Cable: Glenair Part No. (Mfgr. P/N)	Cable: Cable Dia.	Type I Ochito: Pin Contact Assembly Instr.	Type I Ochito: Skt Contact Assembly Instr.	Type II Ochito: Pin Contact Assembly Instr.	Type II Ochito: Skt Contact Assembly Instr.
1000BASE-T, 10GBASE-T; el Ochito "White"							
24	S/UTP	963-037-24 (PIC E6A3824)	.260 (6.60)	--	--	858-005-03 AI85097-03	858-006-03 AI85097-03
	S/FTP	963-033-24 (Gore RCN9047-24)	.260 (6.60)	--	--	858-005-04 AI85097-04	858-006-04 AI85097-04
26	S/UTP	963-003-26 (PIC E6A3826)	.220 (5.56)	858-003-01F AI85048-01	858-004-01F AI85048-01	858-005-01 AI85097-01	858-006-01 AI85097-01
	S/FTP	963-033-26 (Gore RCN9047-26)	.220 (5.56)	858-003-02F AI85048-02	858-004-02F AI85048-02	858-005-02 AI85097-01	858-006-02 AI85097-01
SuperSpeed USB; el Ochito "Blue"							
26	USB 3.0	963-118	.217 (5.51)	858-028-01F AI85114-02	858-029-01F AI85114-02	858-069-01 AI85158-01	858-070-01 AI85158-01
	USB 3.0	963-110	.236 (5.99)	858-028-02F AI85090-01	858-029-02F AI85090-01	858-069-02 AI85158-02	858-070-02 AI85158-02
HDMI, Displayport and SATA; el Ochito "Red"							
26	Cat 6a S/FTP	963-033-26 (Gore RCN9047-26)	.220 (5.56)	858-030-02F AI85048-02	858-031-02F AI85048-02	858-063-01 AI85149-02	858-064-01 AI85149-02
24	Cat 6a S/FTP	963-033-24	.217 (5.51)	--	--	858-063-02 AI85149-04	858-064-02 AI85149-04

© 2022 Glenair, Inc • 1211 Air Way, Glendale, CA 91201 • 818-247-6000 • www.glenair.com • U.S. CAGE code 06324 • SuperNine™ Catalog
Dimensions in Inches (millimeters) are subject to change without notice.

SuperNine® High-speed Series

MIL-DTL-38999 Series III Type Environmental Connectors

El Ochito® octaxial pin and socket contacts

El Ochito® Type I Pin Contact 858-003, 858-028, and 858-030

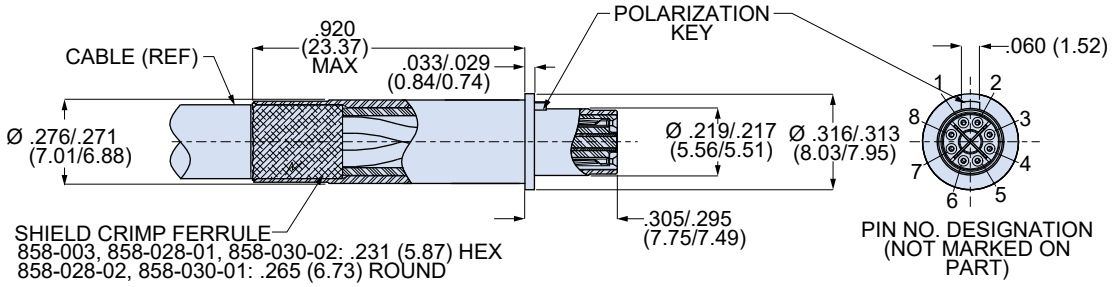

El Ochito® Type I Socket Contact 858-004, 858-029, and 858-031

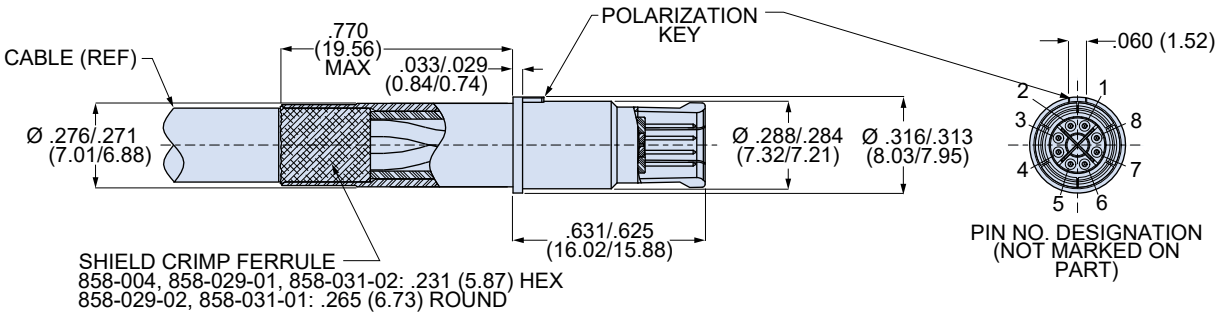

El Ochito® White Type II Pin Contact 858-005

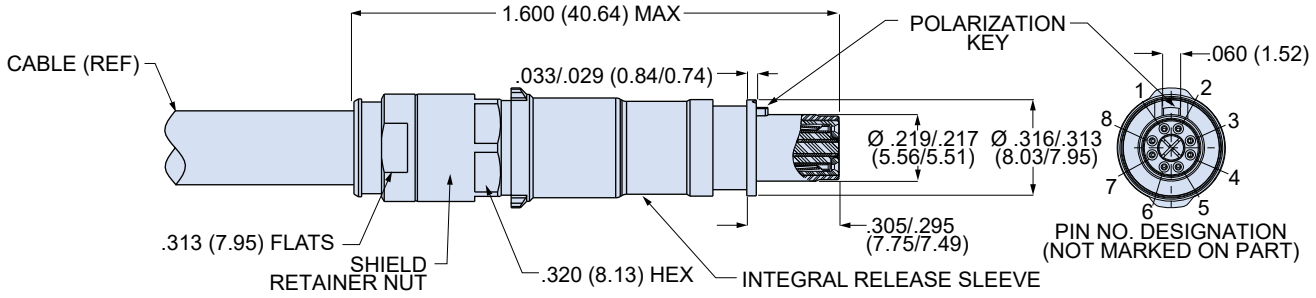

El Ochito® White Type II Socket Contact 858-006

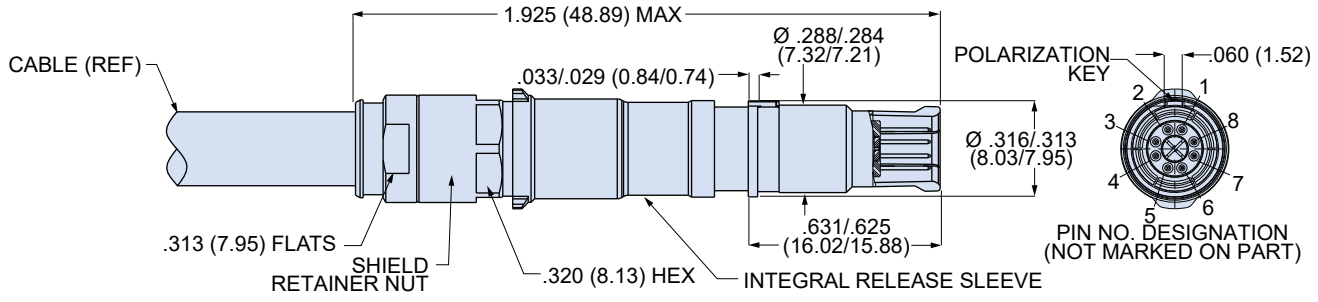

© 2022 Glenair, Inc • 1211 Air Way, Glendale, CA 91201 • 818-247-6000 • www.glenair.com • U.S. CAGE code 06324 • SuperNine™ Catalog
Dimensions in Inches (millimeters) are subject to change without notice.

El Ochito® Blue Type II Pin Contact 858-069

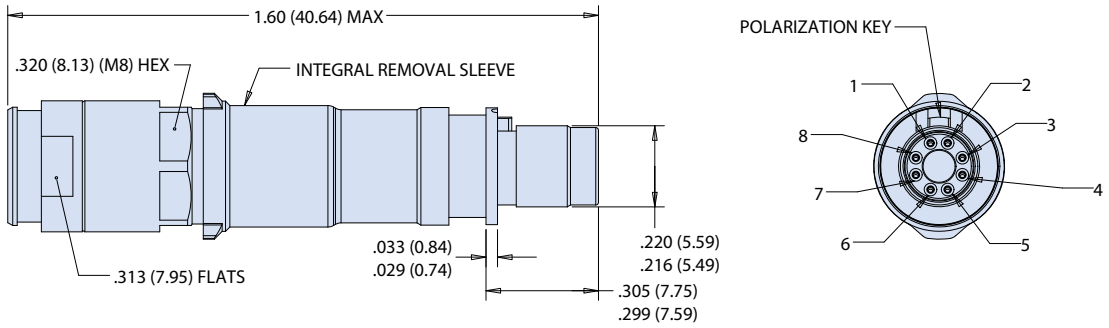

El Ochito® Blue Type II Pin Contact 858-070

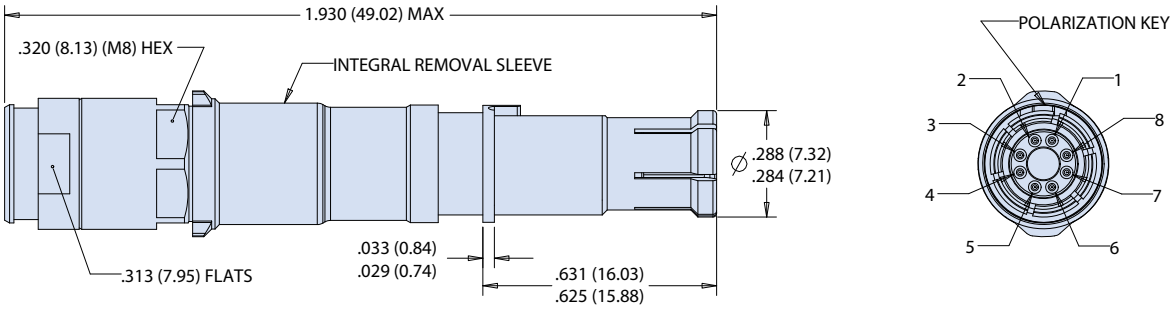

El Ochito® Red Type II Pin Contact 858-063

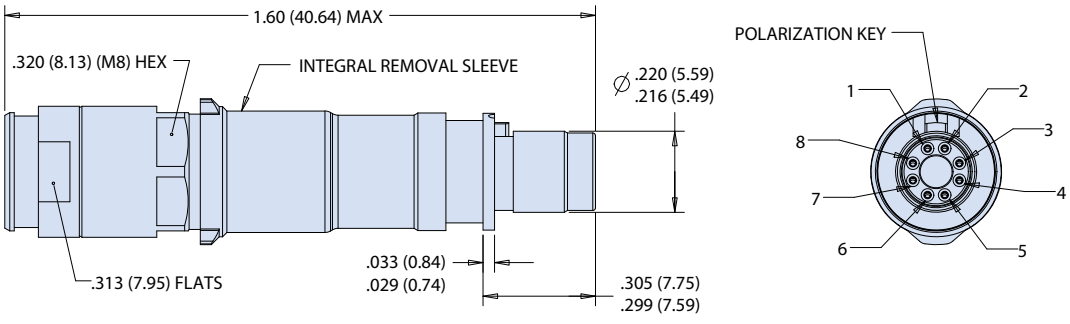

El Ochito® Red Type II Socket Contact 858-064

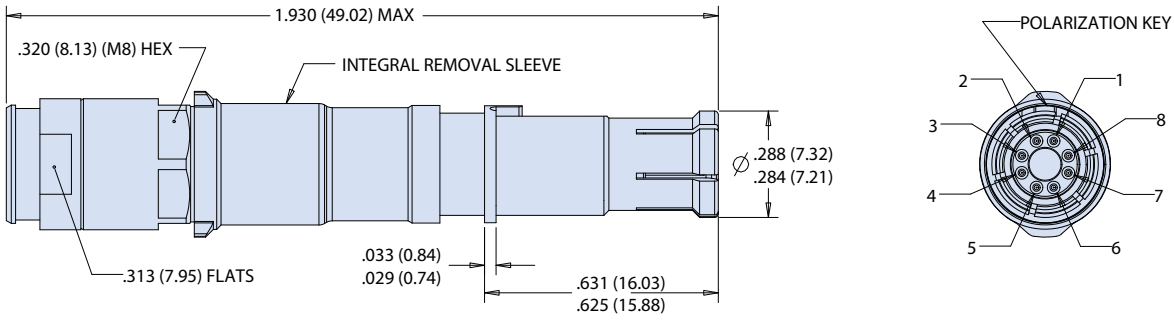

© 2022 Glenair, Inc • 1211 Air Way, Glendale, CA 91201 • 818-247-6000 • www.glenair.com • U.S. CAGE code 06324 • SuperNine™ Catalog

Dimensions in Inches (millimeters) are subject to change without notice.

SuperNine® High-speed Series

MIL-DTL-38999 Series III Type Environmental Connectors

El Ochito® octaxial contact and cable assembly tools and accessories

Assembly Tools

Contact PN	Inner Contact Crimp		Cable Shield Hex Crimp		Cable Shield Round Crimp			Key Alignment Tool	Rear Ferrule Insertion Tool
	Tool	Positioner	Tool	Hex Die	Tool	Positioner 1	Positioner 2		
858-003	809-015	859-101	809-129	859-007				600-236	600-242
858-004	809-015	859-101	809-129	859-007				600-235	600-242
858-005	809-015	859-101						600-236	
858-006	809-015	859-101						600-235	
858-028-01	809-015	859-101	809-129	859-007				600-236	600-242
858-028-02	809-015	859-101			859-134	859-184-2	859-184-3	600-236	600-242
858-029-01	809-015	859-101	809-129	859-007				600-235	600-242
858-029-02	809-015	859-101			859-134	859-184-1	859-184-2	600-235	600-242
858-030-02	809-015	859-101	809-129	859-007				600-236	600-242
858-031-02	809-015	859-101	809-129	859-007				600-235	600-242

Inner Contact Crimp Tools		Cable Shield Crimp Tools				Removal Tool
		Hex Crimp		Round Crimp		
						
809-015 (M22520/2-01)	859-101 (K1906)	809-129 (M22520/5-01)	859-007 (M22520/5-45)	859-134 (GS206)	859-184 (M22520/31-02)	859-049 (M81969/14-12)

Key Alignment Tools		Rear Ferrule Insertion Tool
		
600-235 **600-243** Socket contact	**600-236** **600-244** Pin contact	**600-242**

Contact factory for available alignment inspection tools for use with existing assemblies.

Sealing Boot

An "F" suffix in the contact part number indicates the contact is supplied with a sealing boot. To order these contacts without sealing boots, delete the "F" suffix from the part number. Sealing boots are not supplied with 858-005, 858-006, 858-009, 858-010, 858-035, 858-037, 858-038 and 858-039 contacts.

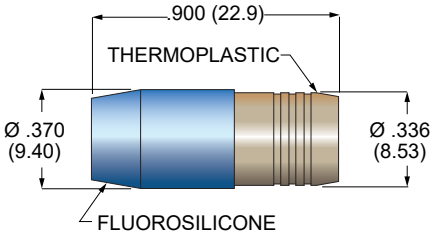

SEALING BOOT FOR OCHITO CONTACTS

687-754-8-8
FOR .220 (5.56) DIAMETER CABLES
687-754-8-9
FOR .236 (6.0) DIAMETER CABLES

© 2022 Glenair, Inc • 1211 Air Way, Glendale, CA 91201 • 818-247-6000 • www.glenair.com • U.S. CAGE code 06324 • SuperNine™ Catalog
Dimensions in Inches (millimeters) are subject to change without notice.

SuperNine® High-speed Series

MIL-DTL-38999 Series III Type Environmental Connectors

600-280 El Ochito® contact termination/installation kit



600-280 tool kit combines all the tools necessary to terminate El Ochito red, blue, and white contacts. Great for customers looking to terminate el Ochito® contacts to cables. Unit includes portable protective case with cutout foam for ease of transportation. Order by kit level for simplified ordering. Customize tool kit contents to meet your specific requirements. Additional foam cutout cavities allow for easy to upgrade your kit as you increase your el Ochito tool collection.

Part Number Development			
Sample Part Number	**600-280**	**-01**	
Product	**600-280** = El Ochito Installation Tool Kit		
Kit Number	**-01 =** Basic Assembly **-04** = Basic Assembly + Crimp Dies, and Positioners **-07 =** Basic Assembly+ Crimp Dies, Positioners and Crimp Tools		
Modifier	**Omit** = None **H** = Hex Crimp Only (See Table I)		

Kit 01: Basic Kit	
-01	
Tool Description	**P/N**
Socket El Ochito Alignment Tool	600-235
Pin El Ochito Alignment Tool	600-236
Ferrule Inserter	600-242

Table I: Items Removed By Modifier "H"[1]	
Tool Description	P/N
859-134 (GS206) Positioner 1	859-184-1
859-134 (GS206) Positioner 2	859-184-2
859-134 (GS206) Positioner 3	859-184-3
Circle Body Crimper (GS206)	859-134

Notes
Modifier "H" Removes all tools and dies associated with the circle body crimp. See Table II. Not applicable to "-01".

Kit -04: Basic Kit + Crimp Dies & Positioners	
-04	
Tool Description	**P/N**
Socket El Ochito Alignment Tool	600-235
Pin El Ochito Alignment Tool	600-236
Ferrule Inserter	600-242
Contact Positioner (K1906)	859-101
Body Hex Crimp Die (M22520/5-45)	859-007
859-134 (GS206) Positioner 1	859-184-1
859-134 (GS206) Positioner 2	859-184-2
859-134 (GS206) Positioner 3	859-184-3
Removal Tool (M81969/14-12)	859-049

Kit -07: Basic Kit + Crimp Dies & Positioners, and Crimp Tools	
-07	
Tool Description	**P/N**
Socket El Ochito Alignment Tool	600-235
Pin El Ochito Alignment Tool	600-236
Ferrule Inserter	600-242
Contact Positioner (K1906)	859-101
Body Hex Crimp Die (M22520/5-45)	859-007
859-134 (GS206) Positioner 1	859-184-1
859-134 (GS206) Positioner 2	859-184-2
859-134 (GS206) Positioner 3	859-184-3
Removal Tool (M81969/14-12)	859-049
Contact Crimper (M22520/2-01)	809-015
Hex Body Crimper (M22520/5-01)	809-129
Circle Body Crimper (GS206)	859-134

© 2022 Glenair, Inc • 1211 Air Way, Glendale, CA 91201 • 818-247-6000 • www.glenair.com • U.S. CAGE code 06324 • SuperNine™ Catalog
Dimensions in Inches (millimeters) are subject to change without notice.

SuperNine® Tools

MIL-DTL-38999 Series III Type

Crimp tools and positioners

MINIATURE ADJUSTABLE CRIMP TOOLS



809-015

809-015 (M22520/2-01) Standard crimper. Use with standard #23, #22D and #20HD contacts, and with M39029/59 and /60 coaxial center contacts. Requires positioner, ordered separately. These crimp tools perform precision eight indent crimps for gas tight wire terminations and excellent tensile strength. Adjustment wheel has 8 settings. Ratchet mechanism prevents improper crimps. Use with bayonet type positioners. Check calibration with M22520/3 gages. Length is 6.75 inches, weight is approx. 10 oz.

Part Number	Military Part Number	Daniels Part Number
809-015	M22520/2-01	AFM8



Positioners for use with 809-015 miniature adjustable crimp tool. These bayonet-type positioners hold contacts at correct height for crimping with M22520/2 type miniature step adjustable tools, above. Face plate shows correct tool settings.

Glenair Part Number	Military Part Number	Daniels Part Number	For Crimping
859-210	M22520/2-13	K338	Size #23 M39029/18-177 contacts. For use with #22-#28 AWG cable.
859-211	M22520/2-16	K339	Size #23 M39029/17-172 socket contact. For use with #22-#28 AWG cables range.
809-369	M22520/2-07	K40	#22 contacts, Series III, Socket.
859-018	M22520/2-09	K42	#22 contacts, Series III, Pin.
	M22520/2-10	K43	#20 contacts, Series III.
809-125	M22520/2-35	K532-1	#16 M39029/76 and /77 coax inner contact.
859-006	(none)	K1430	#12 M39029/102 inner contact.
859-123	(none)	K1457	#12 M39029/103 inner contact.
859-050	M22520/2-31	K406	#8 M369029/59 and /60 coax (50 ohm) inner contacts. For use with RG180 cable.
809-240 or 859-072	M22520/2-37	K709	#8 coax (75 ohm) inner contact. For use with coax, twinax, and quadrax contacts .
859-101		K1906	#8 el Ochito ® contacts.

CRIMP TOOL AND POSITIONER FOR #16 COAXIAL OUTER CONTACT



809-127

809-126

For crimping size #16 shield sleeves. These mil spec approved tools feature a ratchet mechanism to prevent damage from over crimping. Check calibration with M22520/3 gage.

809-127 Crimp tool for use with size #16 coaxial contacts. Blue handles. 9.75 inches OAL, 1.25 pounds.

809-126 Positioner for use with size #16 coaxial contacts. Use with 809-127 (M22520/4-01) crimp tool.

Part Number	Military Part Number	Daniels Part Number
809-127 Crimper	M22520/4-01	GS100-1
809-126 Positioner	M22520/4-02	GP295

© 2022 Glenair, Inc • 1211 Air Way, Glendale, CA 91201 • 818-247-6000 • www.glenair.com • U.S. CAGE code 06324 • SuperNine™ Catalog
Dimensions in Inches (millimeters) are subject to change without notice.

SuperNine® Tools

MIL-DTL-38999 Series III Type

Crimp tools and positioners for power and coaxial contacts

CRIMP TOOL AND POSITIONER FOR #12, #16, AND #20 POWER CONTACTS, CRIMP ADAPTERS



809-136 Crimp tool for use with size #20, #16 and #12 power pins. 9.75 inches OAL, 1.25 pounds. Use with M39029/57 and /58 contacts and 809-093 adapters.

Positioner for use with size #20, #12 and #16 Power contacts.

Part Number	Military Part Number	Daniels Part Number
809-136 Crimper	M22520/1-01	AF8
809-137 Positioner	M22520/1-04	TH163

PARALLEL ACTION CRIMP TOOL AND HEX DIE SET FOR #12 AND #8 COAX CONTACTS



809-129 Parallel action tool for use with hex crimp dies. 11 inches OAL, 2.0 pounds. Anodized aluminum frame, steel mechanism, plastic handles. Includes tool for die set extraction. Accepts all M22520/5 die sets.

Die set for terminating coaxial shield to outer contact. Use with size #12 matched impedance M39029/102 and 103 type coaxial contacts. Set consists of upper and lower halves. Made of hardened steel with black oxide finish. Die set has two closures.

Part Number	Military Part Number	Daniels Part Number
809-129 Crimper	M22520/5-01	HX4
809-130 Die	M22520/5-03	Y196
859-051 Die	M22520/5-05	Y197
859-047 or 859-007 Die	M22520/5-45	Y143
809-048 Die	M22520/5-105	Y631

CRIMP TOOL AND POSITIONER FOR #8 OCTAXIAL EL OCHITO CABLE SHIELD CRIMP



809-134 crimp tool for size #8 el Ochito® 858-028-02 round crimp shield sleeves. Tool features ratchet mechanism to prevent damage from over crimping. Check calibration with G426 gage.

809-134 Crimp tool for use with size #8 coaxial contacts. Blue handles. 9.75 inches OAL, 1.25 pounds.

859-184 Positioner for use with size #8 el Ochito® 858-028-02 and 858-02-02 (round crimp) octaxial contacts. Use with 809-134 (GS206) crimp tool.

Part Number	Military Part Number	Daniels Part Number
859-134 Crimper	(none)	GS206
859-184 Positioner	(M22520/31-02)	G2P330

© 2022 Glenair, Inc • 1211 Air Way, Glendale, CA 91201 • 818-247-6000 • www.glenair.com • U.S. CAGE code 06324 • SuperNine™ Catalog
Dimensions in Inches (millimeters) are subject to change without notice.

ADVANCED PERFORMANCE

SuperNine® Tools

MIL-DTL-38999 Series III Type

Insertion and extraction tools and retention tester

CONTACT INSERTION AND EXTRACTION TOOLS



Size	Type	Part Number	Military Part Number	Daniels Part Number
#23	Insertion/Extraction	(None)	M81969/1-05	(None)
#23	Insertion/Extraction	(None)	M81969/1-05	(None)
#22	Insertion/Extraction	859-163	M81969/14-01	(None)
#20	Insertion/Extraction	809-207	M81969/14-10	(None)
#16	Insertion/Extraction	809-131	M81969/14-03	(None)
#12	Insertion/Extraction	809-132	M81969/14-04	(None)
#8	Insertion Only	(None)	M81969/14-06	(None)
#8	Extraction Only	859-049	M81969/14-12	(None)
#8	Insertion Only	(None)	M81969/8-13	(None)

CONTACT RETENTION TESTER FOR SUPERNINE CONTACTS



Size 23 contact retention tester shown

Check for properly seated contacts with this spring-loaded tester. Apply the tool tip to the mating end of a contact. Push on the handle until the spring compresses to the recommended force. A visual indicator shows full compression. The contact is properly retained if it is not displaced. Pin tips are used with pin contacts. Socket tips are used with socket contacts. Complete kit options available, or order the tips and handles separately.

Description	Part Number	Daniels PN
#23 Handle	809-107-1	HT250-2
#23 Pin Tip	809-107-2	68-023-01
#23 Socket Tip	809-107-3	67-023-01
#23 Complete Kit	809-107-4	(None)
#22 Handle	859-116-H4	HT250-4
#22 Pin Tip	859-116-22P	68-022-01
#22 Socket Tip	859-116-22S	67-022-01
#22 Complete Kit	859-252-22H4	(None)
#22HD Handle	809-456-1	(None)
#22HD Pin Tip	809-456-2	(None)
#22HD Socket Tip	809-456-3	(None)
#22HD Complete Kit	809-456-4	(None)
#20 Handle	809-370-1	HT250-4
#20 Pin Tip	809-370-2	68-020-01
#20 Socket Tip	809-370-3	67-020-01
#20 Complete Kit	809-370-4	(None)
#16 Handle	809-371-1	HT250-4
#16 Pin Tip	809-371-2	68-016-01
#16 Socket Tip	809-371-3	67-016-01
#16 Complete Kit	809-371-4	(None)
#12 Handle	809-372-1	HT250-4
#12 Pin Tip	809-372-2	68-012-01
#12 Socket Tip	809-372-3	67-012-01
#12 Complete Kit	809-372-4	(None)

© 2022 Glenair, Inc • 1211 Air Way, Glendale, CA 91201 • 818-247-6000 • www.glenair.com • U.S. CAGE code 06324 • SuperNine™ Catalog
Dimensions in Inches (millimeters) are subject to change without notice.

Rev. 10.23.24



WEIGHT / COST-SAVING

Dummy Contact Sealing Plugs (DCSP)

For reliable sealing of unused contact cavities—without the use of electrical contacts

The use of color-coded M27488 type plastic sealing plugs in unused contact cavities is a requirement in all environmental interconnect applications (IAW NA01-1A-505-1, WP 007 00 or 020 00). Conventional sealing plugs, combined with the connector grommet seal, provide reliable dust and moisture ingress protection. But common contact sealing plugs still require that a properly-sized electrical contact be first inserted into the cavity, followed by the plastic plug. Glenair innovative Dummy Contact Sealing Plugs (DCSP) eliminate the need to use expensive electrical contacts as part of the sealing regimen. Fast and easy-to-install, these longer form-factor Dummy Contact Sealing Plugs (DCSP) are a one-piece solution to contact cavity sealing that results in significant weight reduction, material cost reduction, and assembly labor. Available in Size #23 to Size #8, for connector series D38999, Glenair Dummy Contact Sealing Plugs reduce weight as much as 90% compared to conventional contact/sealing plug configurations.

- **Powerful tool in Electrical Wire Interconnect System weight reduction**
- **Eliminates use of expensive electrical contacts for sealing-only applications**
- **Leverages connector contact clip for secure retention of the sealing plug—no possibility of FOD**
- **Easy-to-install single piece design**
- **Visible quality control / confirmation of cavity fill from back of connector**
- **EWIS compliant test report available, ref. GT 15-106**

SuperNine® Weight/cost-saving MIL-DTL-38999 Series III Type

Dummy contact sealing plugs (DCSP)

Dummy Contact Sealing Plug (DCSP) Weight Savings: Size #20 Contact Arrangements

MIL-DTL-38999 Insert Arrangment					Spare Socket Cavity Components				Spare Pin Cavity Components				Mated Pair
Shell Size	Arrangment	Available Cavities	Filled Cavities	Percent Fill	Socket Contact M39029/56-351	Sealing Plug MS27488-20-2	Dummy Contact 680-116-20	Weight Savings	Pin Contact M39029/58-363	Sealing Plug MS27488-20-2	Dummy Contact 680-116-20	Weight Savings	Weight Savings
					(grams)	(grams)	(grams)	(grams)	(grams)	(grams)	(grams)	(grams)	(grams)
9	98	3	2	67	0.50	0.08	0.06	0.52	0.14	0.08	0.06	0.15	0.67
11	98	6	4	67	1.00	0.16	0.12	1.04	0.27	0.16	0.12	0.31	1.34
13	98	10	8	80	1.00	0.16	0.12	1.04	0.27	0.16	0.12	0.31	1.34
15	19	19	14	74	2.50	0.39	0.30	2.59	0.68	0.39	0.30	0.77	3.36
17	26	26	20	77	3.00	0.47	0.36	3.11	0.82	0.47	0.36	0.92	4.03
19	32	32	24	75	4.00	0.62	0.48	4.14	1.09	0.62	0.48	1.23	5.38
21	41	41	32	78	4.50	0.70	0.54	4.66	1.22	0.70	0.54	1.39	6.05
23	55	55	44	80	5.50	0.86	0.66	5.70	1.50	0.86	0.66	1.69	7.39
25	61	61	48	79	6.50	1.01	0.78	6.73	1.77	1.01	0.78	2.00	8.74

Weight Savings per 1,000 Dummy Contact Sealing Plugs (DCSP)

Number of Spare Contact Cavities Sealed	Spare Socket Cavity Components					Spare Pin Cavity Components					Mated Pair	
	Socket Contact M39029/56-351	Sealing Plug MS27488-20-2	Dummy Contact 680-116-20	Weight Savings		Pin Contact M39029/58-363	Sealing Plug MS27488-20-2	Dummy Contact 680-116-20	Weight Savings		Weight Savings	
	(grams)	(grams)	(grams)	(grams)	(lbs)	(grams)	(grams)	(grams)	(grams)	(lbs)	(grams)	(lbs)
1000	500.0	78.0	60.0	518.0	1.14	136.0	78.0	60.0	154.0	0.34	672.0	1.48

Dummy Contact Sealing Plug (DCSP) Weight Savings: Size #22 Contact Arrangements

MIL-DTL-38999 Insert Arrangment					Spare Socket Cavity Components				Spare Pin Cavity Components				Mated Pair
Shell Size	Arrangement	Available Cavities	Filled Cavities	Percent Fill	Socket Contact M39029/56-348	Sealing Plug MS27488-22-2	Dummy Contact 680-116-22	Weight Savings	Pin Contact M39029/58-360	Sealing Plug MS27488-22-2	Dummy Contact 680-116-22	Weight Savings	Weight Savings
					(grams)	(grams)	(grams)	(grams)	(grams)	(grams)	(grams)	(grams)	(grams)
9	35	6	4	67	0.50	0.06	0.07	0.49	0.14	0.06	0.07	0.13	0.62
11	35	13	10	77	0.75	0.09	0.11	0.73	0.22	0.09	0.11	0.20	0.93
13	35	22	16	73	1.49	0.18	0.22	1.46	0.43	0.18	0.22	0.40	1.85
15	35	37	28	76	2.24	0.27	0.32	2.19	0.65	0.27	0.32	0.59	2.78
17	35	55	44	80	2.74	0.33	0.40	2.67	0.79	0.33	0.40	0.73	3.40
19	35	66	52	79	3.49	0.42	0.50	3.40	1.01	0.42	0.50	0.92	4.33
21	35	79	62	78	4.23	0.51	0.61	4.13	1.22	0.51	0.61	1.12	5.25
23	35	100	80	80	4.98	0.60	0.72	4.86	1.44	0.60	0.72	1.32	6.18
25	35	128	102	80	6.47	0.78	0.94	6.32	1.87	0.78	0.94	1.72	8.03

Weight Savings per 1,000 Dummy Contact Sealing Plugs (DCSP)

Number of Spare Contact Cavities Sealed	Spare Socket Cavity Components					Spare Pin Cavity Components					Mated Pair	
	Socket Contact M39029/56-348	Sealing Plug MS27488-22-2	Dummy Contact 687-116-22	Weight Savings		Pin Contact M39029/58-360	Sealing Plug MS27488-22-2	Dummy Contact 680-116-22	Weight Savings		Weight Savings	
	(grams)	(grams)	(grams)	(grams)	(lbs)	(grams)	(grams)	(grams)	(grams)	(lbs)	(grams)	(lbs)
1000	249.0	30.0	36.0	243.0	0.54	72.0	30.0	36.0	66.0	0.15	309.0	0.68

Reference Weights

Component	Weight (g)	Component	Weight (g)
MS27488-22-2	0.030	MS27488-16-3	0.140
M39029/58-360	0.072	M39029/58-364	0.333
M39029/56-348	0.249	M39029/56-352	0.769
Glenair DCSP 660-116-22	0.036	Glenair DCSP 660-116-16	0.140
MS27488-20-2	0.078	MS27488-12-3	0.260
M39029/58-363	0.136	M39029/58-365	0.681
M39029/56-351	0.500	M39029/56-353	1.600
Glenair DCSP 660-116-20	0.060	Glenair DCSP 687-116-12	0.280
		Glenair DCSP 687-821-8	1.800

© 2022 Glenair, Inc • 1211 Air Way, Glendale, CA 91201 • 818-247-6000 • www.glenair.com • U.S. CAGE code 06324 • SuperNine™ Catalog
Dimensions in Inches (millimeters) are subject to change without notice.

SuperNine® Weight/cost-saving
MIL-DTL-38999 Series III Type
Dummy contact sealing plugs (DCSP)

680-116 DUMMY CONTACT SEALING PLUG FOR D38999

Part Number Development				
Sample Part Number		**680-116**	**-8**	**B**
Series	**680-116** = Dummy contact sealing plug			
Dash No.	See Table I			
Boot Option	**B** = Boot supplied with assembly (dash **-8** only) Omit for none			

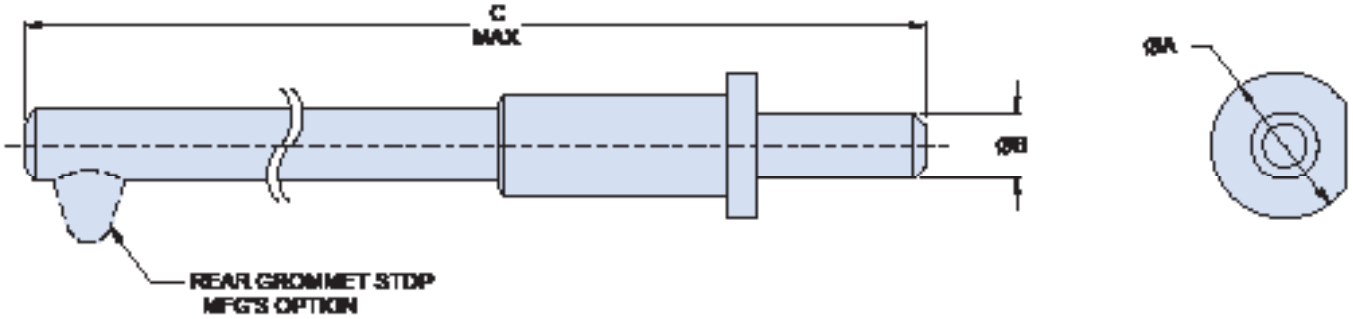

Table I									
Contact Cavity Size/Dash Number	Color Code	ØA		ØB		C Max		Extraction Tool	Standard Pkg. Size
		in.	mm	in.	mm	in.	mm		
-8	Green	.315	8.00	.218	5.54	1.51	38.4	M81969/14-06	100
-12	Orange	.181	4.60	.094	2.39	1.18	30.0	M81969/14-04	100
-16	Violet	.128	3.25	.062	1.57	1.18	30.0	M81969/14-03	500
-20	Red	.093	2.36	.040	1.02	1.18	30.0	M81969/14-10	1000
-22	Black	.061	1.55	.030	.76	1.18	30.0	M81969/14-01	1000
-23	White	.054	1.37	.027	.69	1.18	30.0	M81969/1-05	1000

1. Molded plastic material, 200° minimum temperature limit
2. Designed to seal the unused contact cavities of the MIL-DTL-38999 Ser. I, II, III, IV
3. Size 8 dummy contact requires a boot (ref P/N 859-165-02) to seal the cavity of the grommet, supplied by selecting option "B" in the part number
4. Use 859-106 size 8 sealing plug if any of the following conditions are true:
   - mating connector already has quadrax, differentail twinax, coax (pin)

   or
   - it is uncertain whether such contacts are already installed or will be installed in the contact cavity

© 2022 Glenair, Inc • 1211 Air Way, Glendale, CA 91201 • 818-247-6000 • www.glenair.com • U.S. CAGE code 06324 • SuperNine™ Catalog
Dimensions in Inches (millimeters) are subject to change without notice.

SuperNine® Weight/cost-saving
MIL-DTL-38999 Series III Type
Dummy contact sealing plugs (DCSP)

Connector Series / Size / Color Code / Part Number Selection							
	Crimp Removable Contact Cavity Size						
Connector Series	23	22	20	16	12	8	8 w/ Boot
D38999 Series I, III, IV	680-116-23	680-116-22	680-116-20	680-116-16	680-116-12	680-116-8	680-116-8B



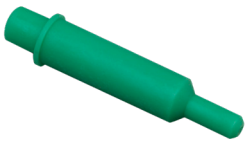


INSTALLATION OF DUMMY CONTACTS

1. Insert Dummy Contacts into unused contact cavities.
   A. Dummy Contacts may be installed using contact insertion tool, needle nose pliers or by hand (space permitting).
   B. Isopropyl alcohol may be used to facilitate insertion of Dummy Contacts.
2. Push Dummy Contact into cavity until flange locks into contact retention clip.
3. Attempt to pull Dummy Contact from connector body to ensure full retention.

Important note: Size #22 and #23 Dummy Contacts In 38999 socket cavities

4. Dummy Contact shall only be inserted into cavity far enough to engage retention clip.
5. Pull Contact back for maximum tail exposure.

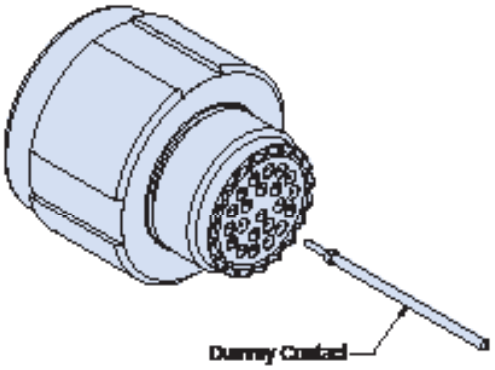

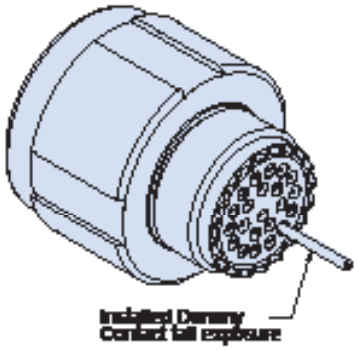

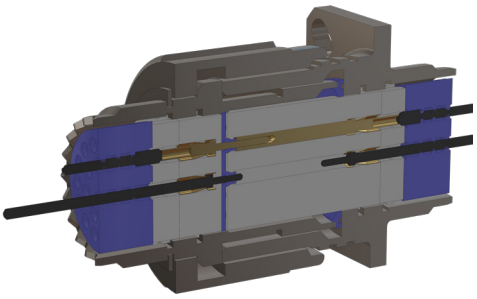

Illustration shows conventional sealing plug / contact configuration (top) and long form-factor Dummy Contact Sealing Plugs (bottom).

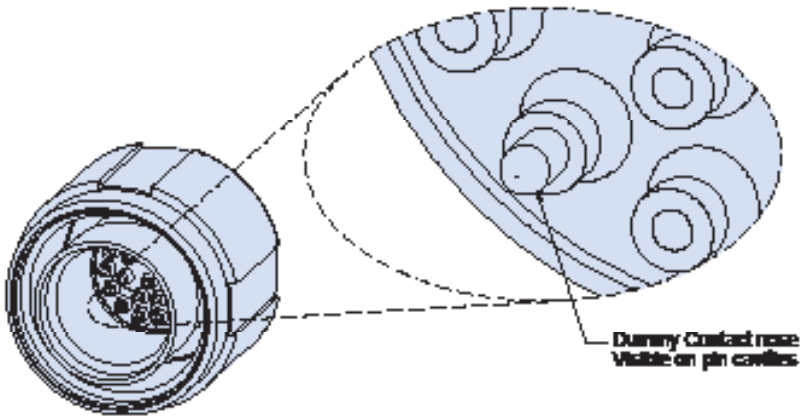

© 2022 Glenair, Inc • 1211 Air Way, Glendale, CA 91201 • 818-247-6000 • www.glenair.com • U.S. CAGE code 06324 • SuperNine™ Catalog
Dimensions in Inches (millimeters) are subject to change without notice.

Rev. 12.04.23

SuperNine® Weight/cost-saving MIL-DTL-38999 Series III Type

Size 8 plastic sealing plugs

859-106 SEALING PLUG FOR D38999

Part Number Development			
Sample Part Number		**859-106**	**F**
Series	**859-106** = Dummy contact sealing plug		
Grommet Follower	**F** = Grommit follower; Omit for not		



Plastic sealing plugs are for use in MIL-DTL-38999 Series III arrangements with size 8 catvities. Optional grommet follower is designed to fit Glenair connector grommet.

1. Use 859-106 size 8 sealing plug if any of the following conditions are true:
   - mating connector already has quadrax, differentail twinax, coax (pin)

   or
   - it is uncertain whether such contacts are already installed or will be installed in the contact cavity

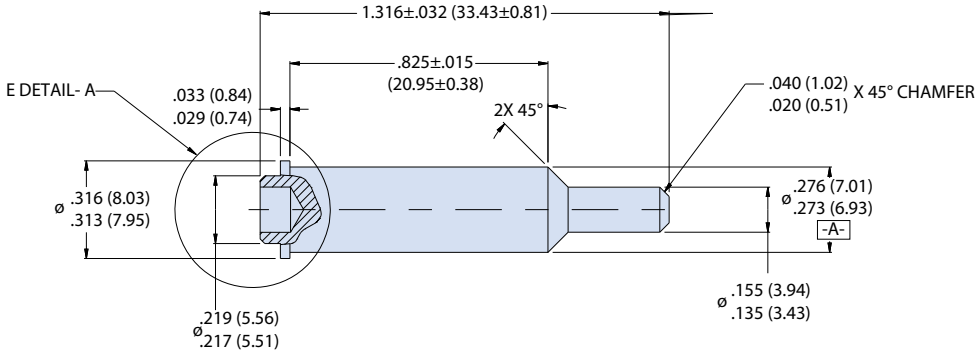

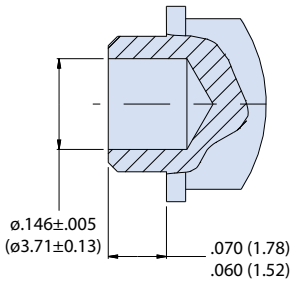

DETAIL-A

© 2022 Glenair, Inc • 1211 Air Way, Glendale, CA 91201 • 818-247-6000 • www.glenair.com • U.S. CAGE code 06324 • SuperNine™ Catalog
Dimensions in Inches (millimeters) are subject to change without notice.

ADVANCED PERFORMANCE

SuperNine® Tools

MIL-DTL-38999 Series III Type

Band-Master ATS® banding tool



The 601-100 Standard Band-Master ATS® Tool weighs 1.18 lbs., and is designed for standard flat .24" width clamping bands (601-005, 601-040 and 601-049) in a tension range from 100 to 180 lbs. Calibrate at 150 lbs. ± 5 lbs. for most shield terminations. Tool and band should never be lubricated.

Band-Master ATS® Band Selection						
	Length		Part Number		Fits Diameter	
Bands	in.	mm.	Flat	Pre-Coiled	in.	mm.
Short Standard Band	9.0	228.6	601-005	601-006	1.0	25.4
Medium Standard Band	14.0	355.6	601-040	601-041	1.8	47.8
Long Standard Band	18.0	457.2	601-049	601-050	2.5	63.5

Cable Pull Strength					
Name	Material Type	Band Width	Material Thickness	Tool Setting	Cable Pull Strength
Standard	300 SS	0.24"	.020"	150 lbs	160 lbs
Micro	300 SS	0.12"	.015"	80 lbs	80 lbs
Nano	300 SS	0.075"	.010"	35 lbs	100 lbs*

Short Flat 601-005
Short Precoiled 601-006

Standard Bands are precision constructed of 300 Series SST/ Passivate IAW AMS 2700. Short Standard Bands are 9.00 inches (228.6) in length and designed for use with the Band-Master ATS® 601-100 hand banding tool or the 601-104 pneumatic banding tool. Bands should always be double wrapped and will accommodate diameters up to approximately 1.0 inches (25.4). Quantity packaging is also available: 100 flat (601-007) and 100 pre-coiled (601-008).

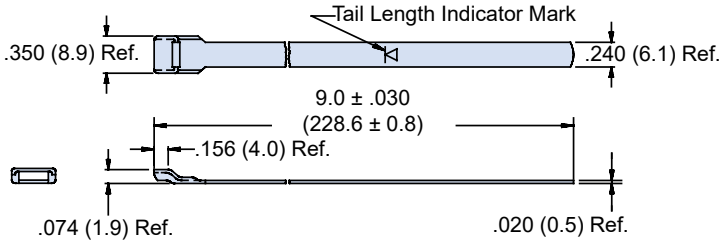

Medium Flat 601-040
Medium Precoiled 601-041

Standard Bands are precision constructed of 300 Series SST/Passivate IAW AMS 2700. Medium Standard Bands are 14.0 inches (355.6) in length and designed for use with the Band-Master ATS® 601-100 hand banding tool or the 601-104 pneumatic banding tool. Bands should always be double wrapped and will accommodate diameters up to approximately 1.8 inches (45.7). Quantity packaging is also available: 100 flat (601-042) and 100 pre-coiled (601-043).

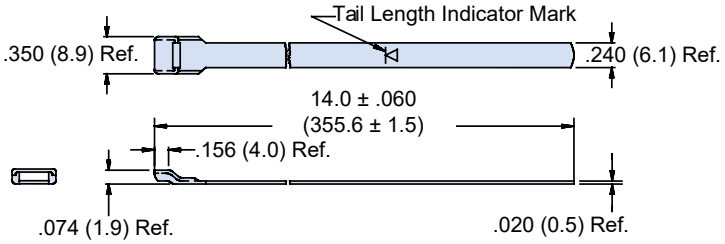

Long Flat 601-049
Long Precoiled 601-050

Standard Bands are precision constructed of 300 Series SST/ Passivate IAW AMS 2700. Long Standard Bands are 18.0 inches (457.2) in length and designed for use with the Band-Master ATS® 601-100 hand banding tool or the 601-104 pneumatic banding tool. Bands should always be double wrapped and will accommodate diameters up to approximately 2.5 inches (63.5). Quantity packaging is also available: 100 flat (601-051) and 100 pre-coiled (601-052).

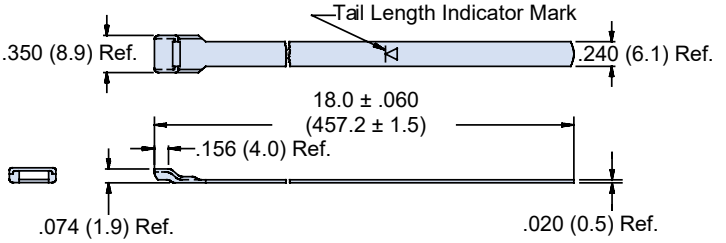

© 2022 Glenair, Inc • 1211 Air Way, Glendale, CA 91201 • 818-247-6000 • www.glenair.com • U.S. CAGE code 06324 • SuperNine™ Catalog
Dimensions in Inches (millimeters) are subject to change without notice.

SuperNine® Tools

MIL-DTL-38999 Series III Type

600H005 Connector holding tool, plug and receptacle

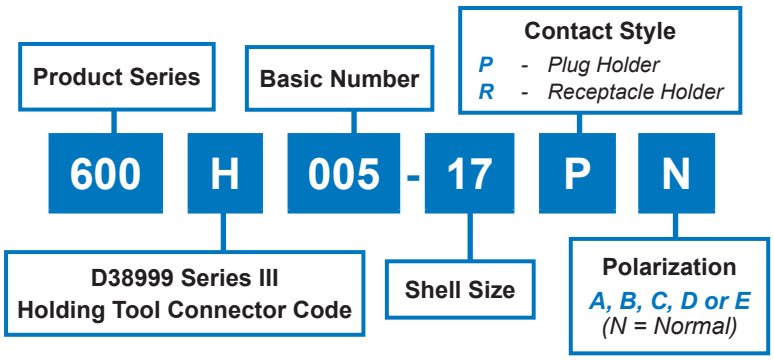

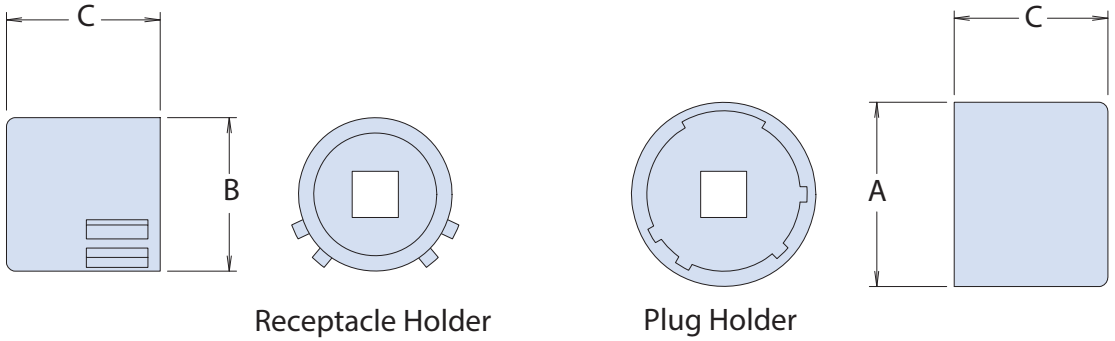

Receptacle Holder

Plug Holder

Dash Number, Torque and Dimensions						
Connector Shell Size	MIN/MAX IN-LB			A Dia Max	B Dia Max	C Dim Max
	Aluminum	Composite	Stainless Steel, High Vibration Applications			
09, A	30/40	20/25	91/101	.577 (14.7)	.438 (11.1)	1.031 (26.2)
11, B	30/40	20/30	115/125	.709 (18.0)	.566 (14.4)	1.031 (26.2)
13, C	35/45	25/35	115/125	.829 (21.1)	.678 (17.2)	1.031 (26.2)
15, D	35/45	25/35	139/149	.954 (24.2)	.803 (20.4)	1.031 (26.2)
17, E	35/45	30/40	139/149	1.107 (28.1)	.928 (23.6)	1.031 (26.2)
19, F	35/45	30/40	175/185	1.190 (30.2)	1.033 (26.2)	1.031 (26.2)
21, G	75/85	35/45	199/209	1.315 (33.4)	1.158 (29.4)	1.031 (26.2)
23, H	75/85	35/45	223/233	1.440 (36.6)	1.283 (32.6)	1.031 (26.2)
25, J	75/85	35/45	259/269	1.565 (39.8)	1.408 (35.8)	1.031 (26.2)

NOTES

1. Metric dimensions (mm) are indicated in parentheses.
2. Material: Case hardened carbon steel with electroless nickel finish.
3. Receptacle and plug holder drives: 1/4" - Shell sizes 09, 11 and 13; 3/8" - Shell sizes 15 and up.
4. Composite values apply when using Glenair 600-091 and 600-007 tools.

© 2022 Glenair, Inc • 1211 Air Way, Glendale, CA 91201 • 818-247-6000 • www.glenair.com • U.S. CAGE code 06324 • SuperNine™ Catalog
Dimensions in Inches (millimeters) are subject to change without notice.

ADVANCED PERFORMANCE

SuperNine® Tools

MIL-DTL-38999 Series III Type

TG90 Connector wrench

TG90	-	15	A
Basic Part Number		Shell Size	Polarization *A, B, C, D, E* (Omit for Normal)

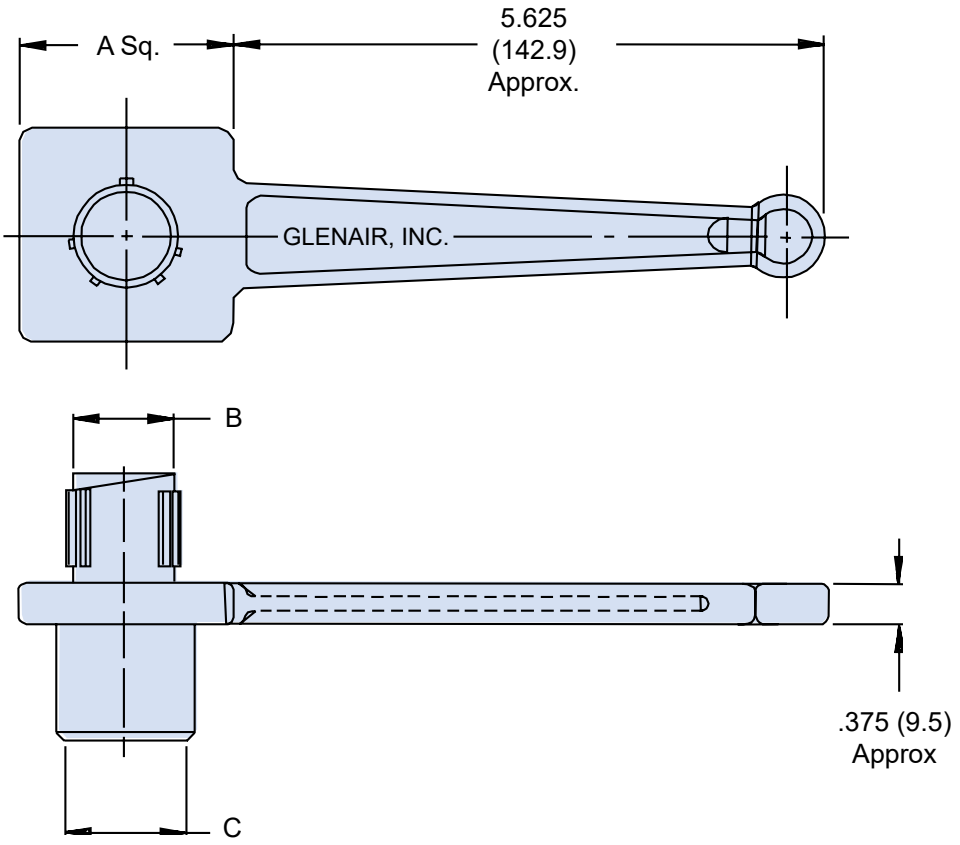

NOTES

1. Metric dimensions (mm) are indicated in parentheses.
2. Material: Aluminum alloy with electroless nickel finish.

Dimensions			
Shell Size	A Dim ± .062 (1.6)	B Dia Ref	C Dia Ref
09	1.250 (31.8)	.438 (11.1)	.441 (11.2)
11	1.250 (31.8)	.566 (14.4)	.569 (14.5)
13	1.250 (31.8)	.678 (17.2)	.682 (17.3)
15	2.000 (50.8)	.802 (20.4)	.811 (20.6)
17	2.000 (50.8)	.928 (23.6)	.931 (23.6)
19	2.000 (50.8)	1.032 (26.2)	1.037 (26.3)
21	2.000 (50.8)	1.155 (29.3)	1.162 (29.5)
23	2.750 (69.9)	1.283 (32.6)	1.288 (32.7)
25	2.750 (69.9)	1.407 (35.7)	1.411 (35.8)

© 2022 Glenair, Inc • 1211 Air Way, Glendale, CA 91201 • 818-247-6000 • www.glenair.com • U.S. CAGE code 06324 • SuperNine™ Catalog
Dimensions in Inches (millimeters) are subject to change without notice.

SuperNine® Tools

MIL-DTL-38999 Series III Type

600-157 Composite hex-coupling wrench

STAINLESS STEEL TOOL FOR USE WITH GLENAIR COMPOSITE BACKSHELLS

600 - 157 - K

- **600** — Product Series
- **157** — Basic Number
- **K** — Dash Number for Individual Wrench or:
  - ***K*** *- Kit of dash numbers 08 thru 28, no case*
  - ***KC*** *- "K" kit with case*
  - ***KL*** *- Kit of dash numbers 32 thru 44, no case*
  - ***KLC*** *= "KL" kit with case*
  - ***KIT*** *= Kit of dash numbers 08 thru 44 with case*

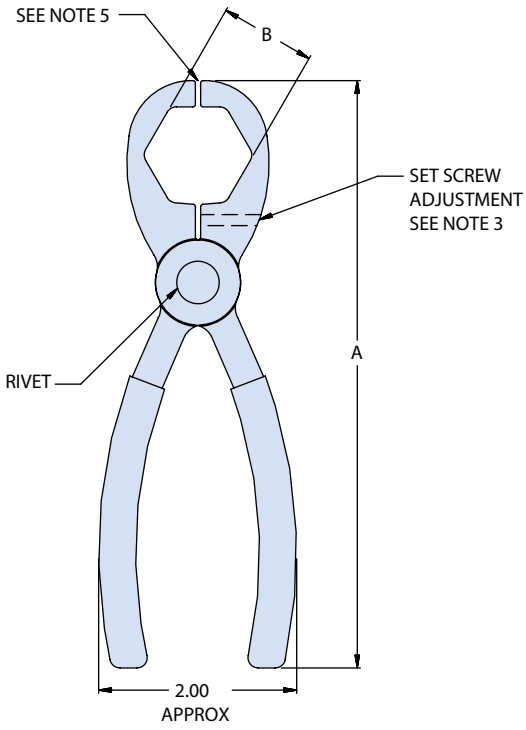

TABLE I: DASH NUMBER

Dash No.	A Ref	B Hex[2] Ref	Connector for Shell Size Codes		Composite Torque Inch Pounds In-Lbs Min/Max
			A & F	Code H	
08	6.70 (170.2)	.750 (19.1)	08	09	20/25
10	6.75 (171.5)	.875 (22.2)	10	11	20/30
12	6.81 (173.0)	1.000 (25.4)	12	13	25/35
14	6.88 (174.8)	1.125 (28.6)	14	15	25/35
16	6.95 (176.5)	1.250 (31.8)	16	17	30/40
18	7.05 (179.1)	1.375 (34.9)	18	19	30/40
20	7.15 (181.6)	1.500 (38.1)	20	21	35/45
22	7.38 (187.5)	1.625 (41.3)	22	23	35/45
24	7.44 (189.0)	1.750 (44.5)	24	25	35/45

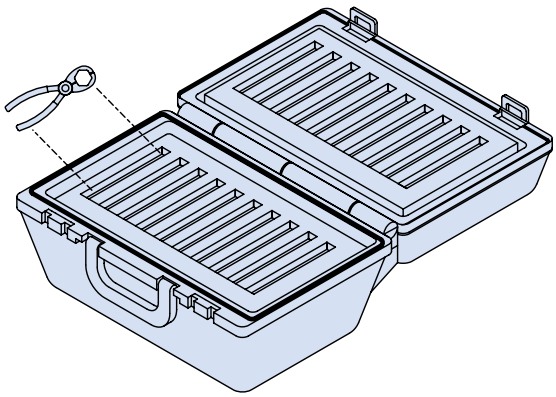

KC Option
Approximate Case Dimensions: 13.5 x 15.5 x 3.875

NOTES

1. Use in conjunction with Glenair 600G161 torque wrench and 600-162B or 600-162BV bench mounts (see page 14).
2. Adjust set screw per tool setting procedure GAP134 (available on Glenair.com). Once adjusted must fit Glenair hex composite coupling nuts
3. Dash Number 08, 10, 12 only. Customer is responsible for maintaining adjustment to compensate for wear.
4. Replace tool if excessive wear is observed
5. Gap is permissible during tool use for coupling nut assembly
6. If set screw becomes loose causing loss of adjustment reapply suitable thread locking compound
7. Wrenches are made of passivated SST with vinyl grips.
8. Using other manufacturer's hex wrench pliers or soft jaw coated pliers will result in premature fracturing or damage to the composite product

© 2022 Glenair, Inc • 1211 Air Way, Glendale, CA 91201 • 818-247-6000 • www.glenair.com • U.S. CAGE code 06324 • SuperNine™ Catalog
Dimensions in Inches (millimeters) are subject to change without notice.

SuperNine® Tools

MIL-DTL-38999 Series III Type

859-252 Contact retention tester kit

Part Number Development			
Sample Part Number		**859-252**	**-23H4**
Series	**859-252** = Contact retention tester kit		
Tool Kit, Contact Size	See Table I (Ex: 23H4 = contact size 23 retetion test kit)		

Table I

Tool Kit Dash No	Contact Size	Socket Tester	Pin Tester	Tool Body	Range Pounds
23H4	23	23S	23P	H4	7.0-18.0
22H4	22	22S	22P	H4	
20H4	20	20S	20P	H4	
16H6	16	16S	16P	H6	24.0-40.0
12H6	12	12S	12P	H6	
10H6	10	10S	10P	H6	
8H6	8	8S	8P	H6	

NOTES

1. Contact retention tester kit includes pin tip tester, socket tip tester and tool body.
2. Select tool body per pre-set range in lbs and adjust per contact retention force requirement before use.
3. Tool kit is to test contact retention IAW MIL-DTL-38999.
4. To order individual tool body or pin tip or socket tip, see 859-116.

© 2022 Glenair, Inc • 1211 Air Way, Glendale, CA 91201 • 818-247-6000 • www.glenair.com • U.S. CAGE code 06324 • SuperNine™ Catalog
Dimensions in Inches (millimeters) are subject to change without notice.

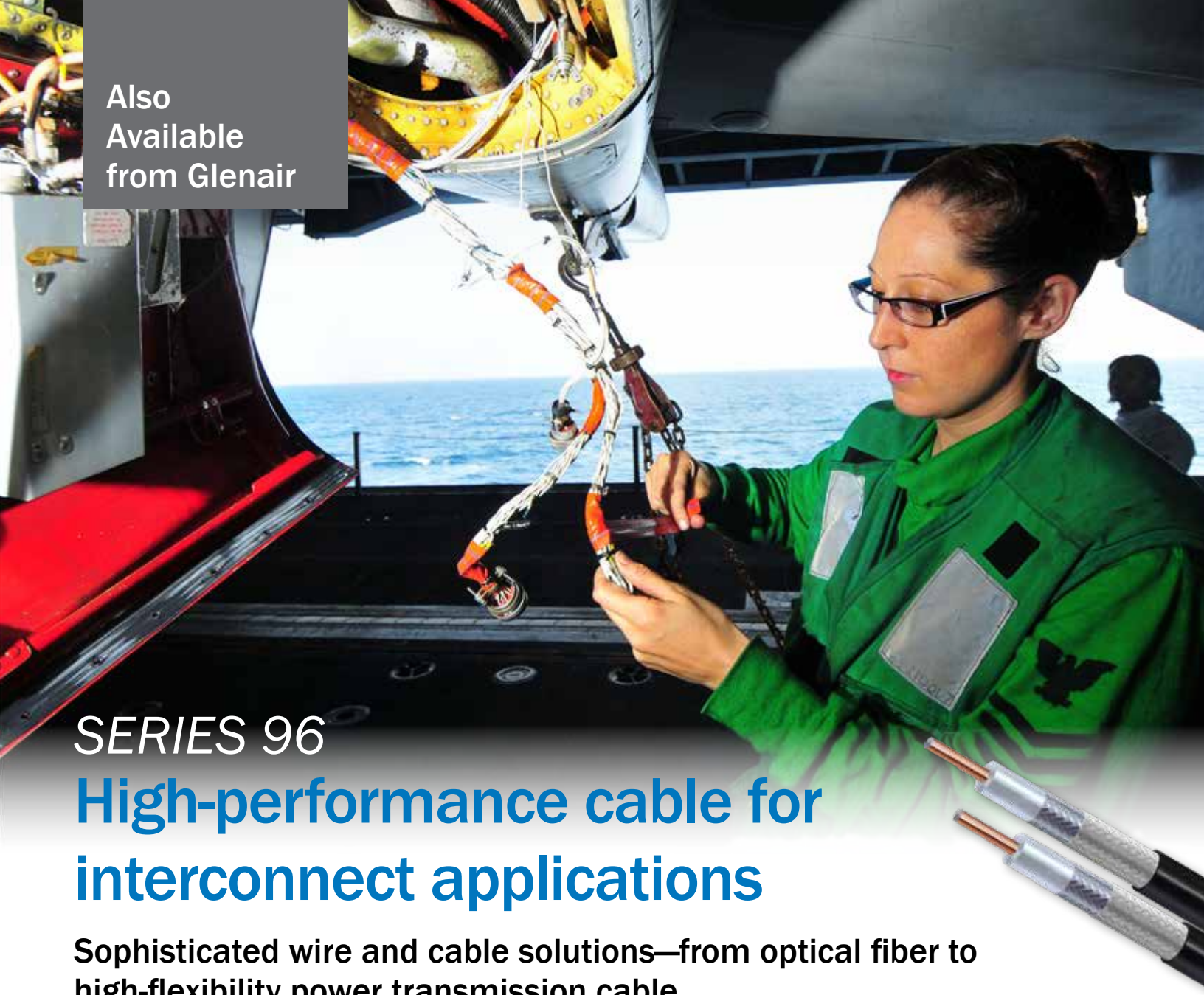

SERIES 96

High-performance cable for interconnect applications

Sophisticated wire and cable solutions—from optical fiber to high-flexibility power transmission cable

Glenair is unique in the interconnect industry in that we design and manufacture every key component part used in today's most high-performance interconnect harnesses and assemblies. From discrete contacts to connectors, backshells, EMI/RFI shielding, jacketing—and now wire and cable—Glenair manufactures and supplies the full range of requirements.

Introducing Glenair high performance wire and cable: Our line of high-performance wire and cable includes Mil-Spec and commercial variants of commonly specified M22759 type multi-conductor shielded cabling, as well as a full range of Quadrax, Coaxial, fiber optic, and protocol-specific (Ethernet, USB, Firewire and eSATA) cables. We also offer several unique and high-performance cable solutions of our own design for harsh-environment power and signal applications. Best of all, Glenair high-performance wire and cable is offered in short runs with no length or dollar minimums. Fast turnaround—up to and including stock—is our model. Call the factory or visit our website for price and delivery information.

Engineered wire and cable solutions

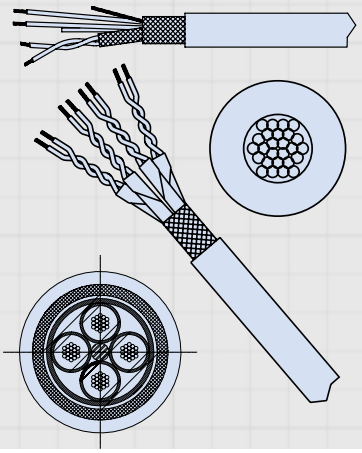

© 2022 Glenair, Inc • 1211 Air Way, Glendale, CA 91201 • 818-247-6000 • www.glenair.com • U.S. CAGE code 06324 • SuperNine™ Catalog
Dimensions in Inches (millimeters) are subject to change without notice.

SuperNine®

MIL-DTL-38999 Series III Type

Standard PCB footprints

Mating face of pin insert shown (socket will be opposite)

9-94
2 #20

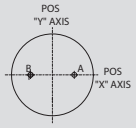

I.D. No.	Location	
	X	Y
A	.065	.000
B	-.065	.000

9-35
6 #22D

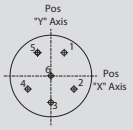

I.D. No.	Location	
	X	Y
1	.045	.078
2	.078	-.045
3	.000	-.090
4	-.078	-.045
5	-.045	.078
6	.000	.000

9-98
3 #20

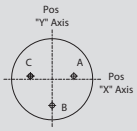

I.D. No.	Location	
	X	Y
A	.065	.038
B	.000	-.075
C	-.065	.038

11-2
2 #16

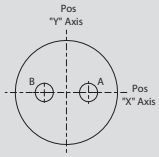

I.D. No.	Location	
	X	Y
A	.095	.000
B	-.095	.000

11-4
4 #20

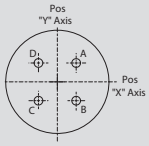

I.D. No.	Location	
	X	Y
A	.065	.065
B	.065	-.065
C	-.065	-.065
D	-.065	.065

11-5
5 #20

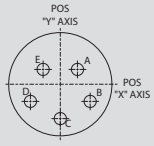

I.D. No.	Location	
	X	Y
A	.065	.056
B	.113	-.065
C	.000	-.130
D	-.113	-.065
E	-.065	.056

11-35
13 #22D

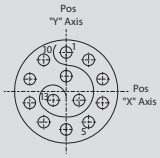

I.D. No.	Location		I.D. No.	Location	
	X	Y		X	Y
1	.000	.146	8	-.138	-.045
2	.085	.118	9	-.138	.045
3	.138	.045	10	-.085	.118
4	.138	-.045	11	.000	.056
5	.085	-.118	12	.049	-.035
6	.000	-.146	13	-.049	-.035
7	-.085	-.118			

Based on MIL-STD-1560 and other specs, contact factory for more details

© 2022 Glenair, Inc • 1211 Air Way, Glendale, CA 91201 • 818-247-6000 • www.glenair.com • U.S. CAGE code 06324 • SuperNine™ Catalog
Dimensions in Inches (millimeters) are subject to change without notice.

SuperNine®

MIL-DTL-38999 Series III Type

Standard PCB footprints

Mating face of pin insert shown (socket will be opposite)

11-98
6 #20

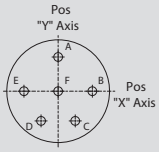

I.D. No.	Location	
	X	Y
A	.000	.130
B	.130	.000
C	.065	-.113
D	-.065	-.113
E	-.130	.000
F	.000	.000

11-99
7 #20

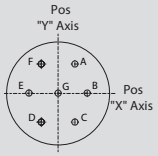

I.D. No.	Location		I.D. No.	Location	
	X	Y		X	Y
A	.065	.113	E	-.130	.000
B	.130	.000	F	-.065	.113
C	.065	-.113	G	.000	.000
D	-.065	-.113			

13-4
4 #16

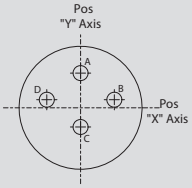

I.D. No.	Location	
	X	Y
A	.000	.150
B	.146	.035
C	.000	-.083
D	-.146	.035

13-8
8 #20

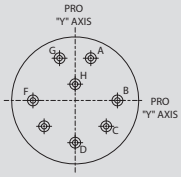

I.D. No.	Location		I.D. No.	Location	
	X	Y		X	Y
A	.065	.157	E	-.120	-.120
B	.170	.000	F	-.170	.000
C	.120	-.120	G	-.065	.157
D	.000	-.170	H	.000	.044

13-98
10 #20

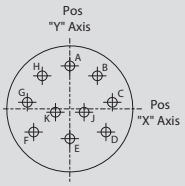

I.D. No.	Location		I.D. No.	Location	
	X	Y		X	Y
A	.000	.195	F	-.164	-.105
B	.125	.150	G	-.193	.030
C	.193	.030	H	-.125	.150
D	.164	-.105	J	.065	-.015
E	.000	-.135	K	-.065	-.015

13-35
22 #22D

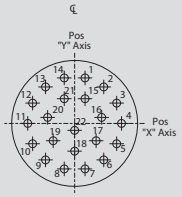

I.D. No.	Location		I.D. No.	Location	
	X	Y		X	Y
1	.045	.197	12	-.182	.088
2	.126	.158	13	-.126	.158
3	.182	.088	14	-.045	.197
4	.203	.000	15	.045	.107
5	.182	-.088	16	.117	.026
6	.126	-.158	17	.093	-.075
7	.045	-.197	18	.000	-.120
8	-.045	-.197	19	-.093	-.075
9	-.126	-.158	20	-.117	.026
10	-.182	-.088	21	-.045	.107
11	-..203	.000	22	.000	-.030

Based on MIL-STD-1560 and other specs, contact factory for more details

© 2022 Glenair, Inc • 1211 Air Way, Glendale, CA 91201 • 818-247-6000 • www.glenair.com • U.S. CAGE code 06324 • SuperNIne™ Catalog
Dimensions in Inches (millimeters) are subject to change without notice.

SuperNine®

MIL-DTL-38999 Series III Type

Standard PCB footprints

Mating face of pin insert shown (socket will be opposite)

15-5

5 #16

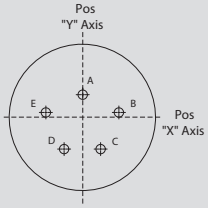

I.D. No.	Location	
	X	Y
A	.000	.100
B	.174	.024
C	.094	-.148
D	-.094	-.148
E	-.174	.024

15-18

18 #20

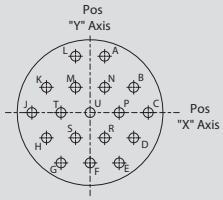

I.D. No.	Location		I.D. No.	Location	
	X	Y		X	Y
A	.065	.252	K	-.195	.113
B	.195	.113	L	-.065	.252
C	.260	.000	M	-.065	.113
D	.195	-.113	N	.065	.113
E	.130	-.225	P	.130	.000
F	.000	-.225	R	.065	-.113
G	-.130	-.225	S	-.065	-.113
H	-.195	-.113	T	-.130	.000
J	-.260	.000	U	.000	.000

15-19

19 #20

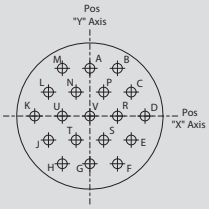

I.D. No.	Location		I.D. No.	Location	
	X	Y		X	Y
A	.000	.225	L	-.195	.113
B	.130	.225	M	-.130	.225
C	.195	.113	N	-.065	.113
D	.260	.000	P	.065	.113
E	.195	-.113	R	.130	.000
F	.130	-.225	S	.065	-.113
G	.000	-.225	T	-.065	-.113
H	-.130	-.225	U	-.130	.000
J	-.195	-.113	Y	.000	.000
K	-.260	.000			

15-35

37 #22D

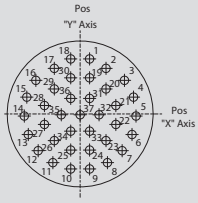

I.D. No.	Location		I.D. No.	Location	
	X	Y		X	Y
1	.045	.262	20	.123	.119
2	.123	.217	21	.170	.040
3	.211	.160	22	.170	-.050
4	.254	.080	23	.123	-.127
5	.266	-.010	24	.045	-.172
6	.247	-.098	25	-.045	-.172
7	.200	-.175	26	-.123	-.127
8	.130	-.232	27	-.170	-.050
9	.045	-.262	28	-.170	.040
10	-.045	-.262	29	-.123	.119
11	-.130	-.232	30	-.045	.172
12	-.200	-.175	31	.045	.074
13	-.247	-.098	32	.090	-.004
14	-.266	-.010	33	.045	-.082
15	-.254	.080	34	-.045	-.082
16	-.211	.160	35	-.090	-.004
17	-.123	.217	36	-.045	.074
18	-.045	.262	37	.000	-.004
19	.045	.172			

Based on MIL-STD-1560 and other specs, contact factory for more details

© 2022 Glenair, Inc • 1211 Air Way, Glendale, CA 91201 • 818-247-6000 • www.glenair.com • U.S. CAGE code 06324 • SuperNine™ Catalog
Dimensions in Inches (millimeters) are subject to change without notice.

SuperNine®

MIL-DTL-38999 Series III Type

Standard PCB footprints

Mating face of pin insert shown (socket will be opposite)

17-6

6 #12

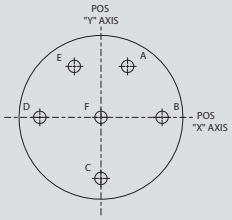

I.D. No.	Location	
	X	Y
A	.121	.209
B	.241	.000
C	.000	-.241
D	-.241	.000
E	-.121	.209

17-8

8 #16

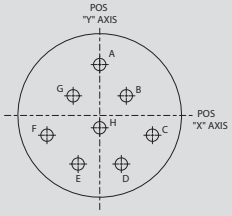

I.D. No.	Location		I.D. No.	Location	
	X	Y		X	Y
A	.000	.236	E	-.094	-.216
B	.128	.086	F	-.230	-.078
C	.230	-.078	G	-.128	.086
D	.094	-.216	H	.000	-.052

17-26

26 #20

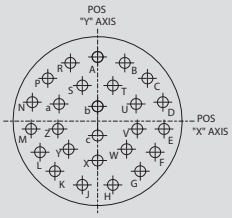

I.D. No.	Location		I.D. No.	Location	
	X	Y		X	Y
A	.000	.321	P	-.239	.214
B	.131	.293	R	-.131	.293
C	.239	.214	S	-.070	.177
D	.305	.099	T	.070	.177
E	.319	-.034	U	.175	.094
F	.278	-.161	V	.178	-.036
G	.189	-.260	W	.119	-.151
H	.067	-.314	X	.000	-.203
J	-.067	-.314	Y	-.119	-.151
K	-.189	-.260	Z	-.178	-.036
L	-.278	-.161	a	-.175	.094
M	-.319	-.034	b	.000	.065
N	-.305	.099	c	.000	-.065

17-35

55 #22D

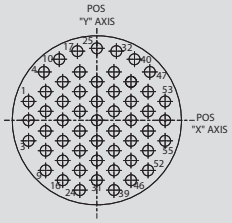

I.D. No.	Location		I.D. No.	Location		I.D. No.	Location	
	X	Y		X	Y		X	Y
1	-.312	.086	20	-.078	.041	39	.078	-.319
2	-.312	-.004	21	-.078	-.049	40	.172	.279
3	-.312	-.094	22	-.078	-.139	41	.156	.176
4	-.242	.221	23	-.078	-.229	42	.156	.086
5	-.234	.131	24	-.078	-.319	43	.156	-.004
6	-.234	.041	25	.000	.329	44	.156	-.094
7	-.234	-.049	26	.000	.176	45	.156	-.184
8	-.234	-.139	27	.000	.086	46	.156	-.274
9	-.234	-.229	28	.000	-.004	47	.242	.221
10	-.172	.279	29	.000	-.094	48	.234	.131
11	-.156	.176	30	.000	-.184	49	.234	.041
12	-.156	.086	31	.000	-.274	50	.234	-.049
13	-.156	-.004	32	.089	.316	51	.234	-.139
14	-.156	-.094	33	.078	.221	52	.234	-.229
15	-.156	-.184	34	.078	.131	53	.312	.086
16	-.156	-.274	35	.078	.041	54	.312	-.004
17	-.089	.316	36	.078	-.049	55	.312	-.094
18	-.078	.221	37	.078	-.139			
19	-.078	.131	38	.078	-.229			

Based on MIL-STD-1560 and other specs, contact factory for more details

© 2022 Glenair, Inc • 1211 Air Way, Glendale, CA 91201 • 818-247-6000 • www.glenair.com • U.S. CAGE code 06324 • SuperNIne™ Catalog
Dimensions in Inches (millimeters) are subject to change without notice.

SuperNine®

MIL-DTL-38999 Series III Type

Standard PCB footprints

Mating face of pin insert shown (socket will be opposite)

19-11

11 #16

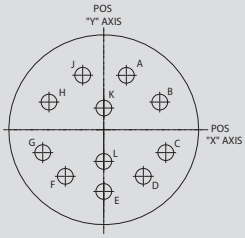

I.D. No.	Location		I.D. No.	Location	
	X	Y		X	Y
A	0.105	0.26	G	-0.275	-0.053
B	0.25	0.132	H	-0.25	0.132
C	0.275	-0.053	J	-0.105	0.26
D	0.179	-0.215	K	0	0.105
E	0	-0.281	L	0	-0.092
F	-0.179	-0.215	--	--	--

19-32

32 #20

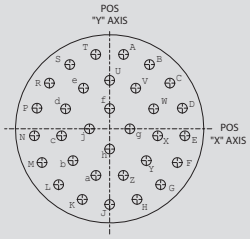

I.D. No.	-Location		I.D. No.	Location	
	X	Y		X	Y
A	.066	.353	T	-.066	.353
B	.189	.305	U	0	.230
C	.286	.217	V	.124	.193
D	.345	.098	W	.209	.095
E	.357	-.033	X	.228	-.033
F	.321	-.160	Y	.174	-.151
G	.242	-.265	Z	.065	-.221
H	.130	-.335	a	-.065	-.221
J	0	-.359	b	-.174	-.151
K	-.130	-.335	c	.228	-.033
L	-.242	-.265	d	-.209	.095
M	-.321	-.160	e	-.124	.193
N	-.357	-.033	f	0	.096
P	-.345	.098	g	.096	0
R	-.286	.217	h	0	-.096
S	-.189	.305	j	-.096	0

19-35

66 #22D

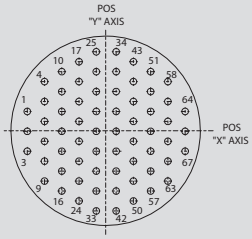

I.D. No.	-Location		I.D. No.	Location		I.D. No.	Location	
	X	Y		X	Y		X	Y
1	-.357	.090	23	-.123	-.225	45	.123	.135
2	-.357	.000	24	-.123	-.315	46	.123	.045
3	-.357	-.090	25	-.045	.360	47	.123	-.045
4	-.279	.225	26	-.045	.270	48	.123	-.135
5	-.279	.135	27	-.045	.180	45	.123	-.225
6	-.279	.045	28	-.045	.090	50	.123	-.315
7	-.279	-.045	29	-.045	.000	51	.201	.270
8	-.279	-.135	30	-.045	-.090	52	.201	.180
9	-.279	-.225	31	-.045	-.180	53	.201	.090
10	-.201	.270	32	-.045	-.270	54	.201	.000
11	-.201	.180	33	-.045	-.360	55	.201	-.090
12	-.201	.090	34	.045	.360	56	.201	-.180
13	-.201	.000	35	.045	.270	57	.201	-.270
14	-.201	-.090	36	.045	.180	58	.279	.225
15	-.201	-.180	37	.045	.090	59	.279	.135
16	-.201	-.270	38	.045	.000	60	.279	.045
17	-.123	.315	39	.045	-.090	61	.279	-.045
18	-.123	.225	40	.045	-.180	62	.279	-.135
19	-.123	.135	41	.045	-.270	63	.279	-.225
20	-.123	.045	42	.045	-.360	64	.357	.090
21	-.123	-.045	43	.123	.315	65	.357	.000
22	-.123	-.135	44	.123	.225	66	.357	-.090

Based on MIL-STD-1560 and other specs, contact factory for more details

© 2022 Glenair, Inc • 1211 Air Way, Glendale, CA 91201 • 818-247-6000 • www.glenair.com • U.S. CAGE code 06324 • SuperNine™ Catalog
Dimensions in Inches (millimeters) are subject to change without notice.

Standard PCB footprints

Mating face of pin insert shown (socket will be opposite)

19-45

67 #22D

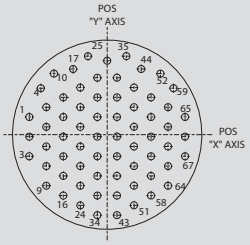

I.D. No.	-Location X	-Location Y	I.D. No.	Location X	Location Y	I.D. No.	Location X	Location Y
1	-.357	.081	24	-.123	-.324	47	.123	.036
2	-.357	-.009	25	-.088	.360	48	.123	-.054
3	-.357	-.099	26	.000	.339	45	.123	-.144
4	-.304	.213	27	-.045	.261	50	.123	-.234
5	-.279	.126	28	-.045	.171	51	.123	-.324
6	-.279	.036	29	-.045	.081	52	.244	.280
7	-.279	-.054	30	-.045	-.009	53	.201	.171
8	-.279	-.144	31	-.045	-.099	54	.201	.081
9	-.279	-.234	32	-.045	-.189	55	.201	-.009
10	-.244	.280	33	-.045	-.279	56	.201	-.099
11	-.201	.171	34	-.045	-.369	57	.201	-.189
12	-.201	.081	35	.088	.360	58	.201	-.279
13	-.201	-.009	36	.045	.261	59	.304	.213
14	-.201	-.099	37	.045	.171	60	.279	.126
15	-.201	-.189	38	.045	.081	61	.279	.036
16	-.201	-.279	39	.045	-.009	62	.279	-.054
17	-.156	.301	40	.045	-.099	63	.279	-.144
18	-.123	.216	41	.045	-.189	64	.279	-.234
19	-.123	.126	42	.045	-.279	65	.357	.081
20	-.123	.036	43	.045	-.369	66	.357	-.009
21	-.123	-.054	44	.156	.301	67	.357	-.099
22	-.123	-.144	45	.123	.216			
23	-.123	-.234	46	.123	.126			

21-11

11 #12

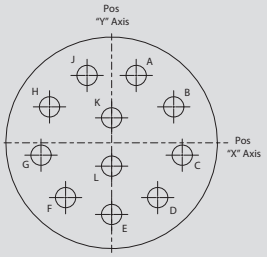

I.D. No.	Location X	Location Y	I.D. No.	Location X	Location Y
A	.121	.332	G	-.348	-.061
B	.306	.177	H	-.306	.177
C	.348	-.061	J	-.121	.332
D	.227	-.270	K	.000	.123
E	.000	-.353	L	.000	-.115
F	-.227	-.270			

21-16

16 #16

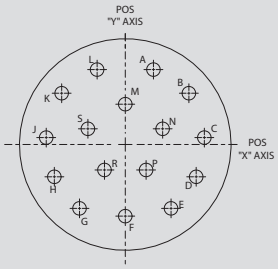

I.D. No.	Location X	Location Y	I.D. No.	Location X	Location Y
A	.118	.322	J	-.341	.036
B	.271	.211	K	-.271	.211
C	.341	.036	L	-.118	.322
D	.308	-.150	M	.000	.175
E	.182	-.290	N	.154	.062
F	.000	-.343	P	.094	-.122
G	-.182	-.290	R	-.094	-.122
H	-.308	-.150	S	-.154	.062

Based on MIL-STD-1560 and other specs, contact factory for more details

© 2022 Glenair, Inc • 1211 Air Way, Glendale, CA 91201 • 818-247-6000 • www.glenair.com • U.S. CAGE code 06324 • SuperNIne™ Catalog
Dimensions in Inches (millimeters) are subject to change without notice.

SuperNine®

MIL-DTL-38999 Series III Type

Standard PCB footprints

Mating face of pin insert shown (socket will be opposite)

21-24

24 #20

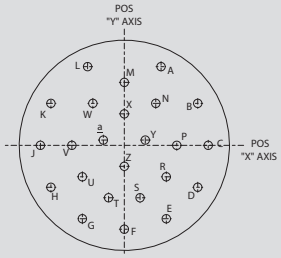

I.D. No	-Location		I.D. No.	Location	
	X	Y		X	Y
A	.175	.375	P	.250	.000
B	.350	.200	R	.200	-.150
C	.400	.000	S	.075	-.250
D	.350	.200	T	-.075	-.250
E	.200	.350	U	-.200	-.150
F	.000	.400	V	-.250	.000
G	.200	-.350	W	-.150	-.200
H	-.350	-.200	X	.000	.150
J	-.400	.000	Y	.100	.025
K	-.350	.200	Z	.000	-.100
L	-.175	.375	a	-.100	.025
M	.000	.300			
N	.150	.200			

21-25

25 #20

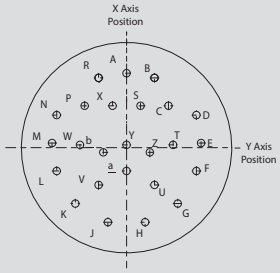

I.D. No	-Location		I.D. No.	Location	
	X	Y		X	Y
A	.000	.400	P	-.225	.225
B	.150	.375	R	-.150	.375
C	.225	.225	S	.075	-.225
D	.375	.175	T	.250	.075
E	.400	.025	U	.150	-.200
F	.375	-.125	V	-.150	-.200
G	.275	-.300	W	-.250	.075
H	.100	-.400	X	-.075	.225
J	-.100	-.400	Y	.000	.075
K	-.275	-.300	Z	.125	-.025
L	-.375	-.125	a	.000	-.125
M	-400	.025	b	-.125	-.025
N	-.375	.175			

21-27

27 #20

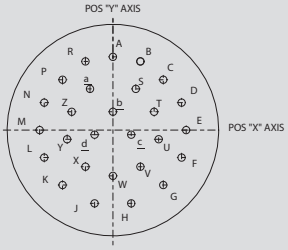

I.D. No	-Location		I.D. No.	Location	
	X	Y		X	Y
A	.000	.400	R	-.150	.375
B	.150	.375	S	.125	.225
C	.275	.275	T	.225	.100
D	.375	.150	U	.250	-.050
E	.400	.025	V	-.150	-.200
F	.375	-.150	W	-.000	-.250
G	.275	-.300	X	-.150	-.200
H	.100	-.400	Y	-.250	-.050
J	-.100	-.400	Z	-.225	-.100
K	-.275	-.300	a	-.125	.225
L	-.375	-.150	b	.000	.100
M	-400	.000	c	.100	-.025
N	-.375	.150	d	-.100	-.025
P	-.150	.275			

Based on MIL-STD-1560 and other specs, contact factory for more details

© 2022 Glenair, Inc • 1211 Air Way, Glendale, CA 91201 • 818-247-6000 • www.glenair.com • U.S. CAGE code 06324 • SuperNine™ Catalog
Dimensions in Inches (millimeters) are subject to change without notice.

SuperNine®

MIL-DTL-38999 Series III Type

Standard PCB footprints

Mating face of pin insert shown (socket will be opposite)

21-35

79 #22D

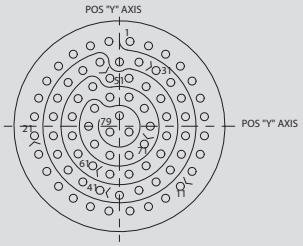

I.D. No.	-Location X	-Location Y	I.D. No.	Location X	Location Y	I.D. No.	Location X	Location Y
1	.053	.426	28	-.053	.426	55	.237	.048
2	.146	.404	29	.000	.323	56	.237	-.048
3	.232	.362	30	.098	.322	57	.208	-.139
4	.306	.302	31	.184	.280	58	.134	-.199
5	.365	.227	32	.258	.220	59	.048	-.241
6	.406	.141	33	.311	.141	60	-.048	-.241
7	.427	.048	34	.332	.048	61	-.134	-.199
8	.427	-.048	35	.332	-.048	62	-.208	-.139
9	.406	-.141	36	.311	-.141	63	-.237	-.048
10	.365	-.227	37	.258	-.220	64	-.237	.048
11	.306	-.302	38	.184	-.280	65	-.208	.139
12	.232	-.362	39	.098	-.322	66	-.134	.199
13	.146	-.404	40	.000	-.347	67	-.048	.146
14	.053	-.426	41	-.098	-.322	68	.048	.146
15	-.053	-.426	42	-.184	-.280	69	.125	.090
16	-.146	-.404	43	-.258	-.220	70	.155	.000
17	-.232	-.362	44	-.311	-.141	71	.125	-.090
18	-.306	-.302	45	-.332	-.048	72	.048	-.146
19	-.365	-.227	46	-.332	.048	73	-.048	-.146
20	-.406	-.141	47	-.311	.141	74	-.125	-.090
21	-.427	-.048	48	-.258	.220	75	-.155	.000
22	-.427	.048	49	-.184	.280	76	-.125	.090
23	-.406	.141	50	-.098	.322	77	.000	.053
24	-.365	.227	51	-.048	.241	78	.048	-.029
25	-.306	.302	52	.048	.241	79	-.048	-.029
26	-.232	.362	53	.134	.199			
27	-.146	.404	54	.208	.139			

21-41

41 #20

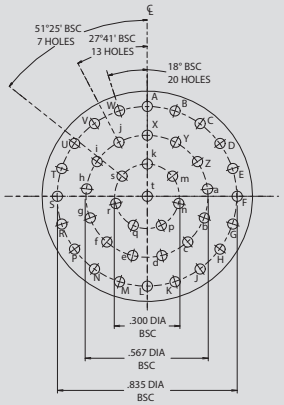

Based on MIL-STD-1560 and other specs, contact factory for more details

© 2022 Glenair, Inc • 1211 Air Way, Glendale, CA 91201 • 818-247-6000 • www.glenair.com • U.S. CAGE code 06324 • SuperNIne™ Catalog
Dimensions in Inches (millimeters) are subject to change without notice.

Mating face of pin insert shown (socket will be opposite)

23-21

21 #16

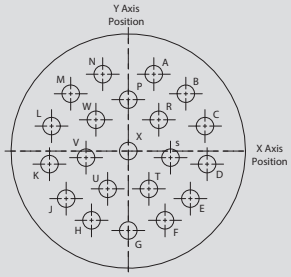

I.D. No	Location X	Location Y	I.D. No.	Location X	Location Y
A	.128	.385	M	-.289	.285
B	.289	.285	N	-.128	.385
C	.386	.123	P	.000	.245
D	.400	-.065	R	.160	.146
E	.328	-.239	S	.214	-.035
F	.183	-.362	T	.094	-.194
G	.000	-.406	U	-.094	-.194
H	-.183	-.362	V	-.214	-.035
J	-.328	-.239	W	-.160	.146
K	-.400	-.065	X	.000	.000
L	-.386	.123			

23-32

32 #20

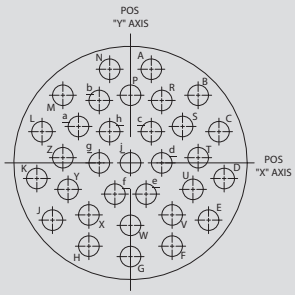

I.D. No	Location X	Location Y	I.D. No.	Location X	Location Y
A	.100 (2.54)	.450 (11.43)	T	.325 (8.26)	.025 (0.64)
B	.325 (8.26)	.325 (8.26)	U	.300 (7.62)	-.125 (3.18)
C	.425 (10.80)	.150 (3.81)	V	.200 (5.08)	-.250 (6.35)
D	.450 (11.43)	-.075 (1.91)	W	.000 (0.00)	-.300 (7.62)
E	.375 (9.53)	-.275 (6.99)	X	-.200 (5.08)	-.250 (6.35)
F	.200 (5.08)	-.400 (10.16)	Y	-.300 (7.62)	-.125 (3.18)
G	.000 (0.00)	-.450 (11.43)	Z	-.325 (8.26)	.025 (0.64)
H	-.200 (5.08)	-.400 (10.16)	a	-.250 (6.35)	.175 (4.45)
J	-.375 (9.53)	-.275 (6.99)	b	-.150 (3.81)	.300 (7.62)
K	-.450 (11.43)	-.075 (1.91)	c	.100 (2.54)	.150 (3.81)
L	-.425 (10.80)	.150 (3.81)	d	.150 (3.81)	.000 (0.00)
M	-.325 (8.26)	.325 (8.26)	e	.075 (1.91)	-.150 (3.81)
N	-.100 (2.54)	.450 (11.43)	f	-.075 (1.91)	-.150 (3.81)
P	.000 (0.00)	.325 (8.26)	g	-.150 (3.81)	.000 (0.00)
R	.150 (3.81)	.300 (7.62)	h	-.100 (2.54)	.150 (3.81)
S	.250 (6.35)	.175 (4.45)	J	.000 (0.00)	.000 (0.00)

23-34

34 #20

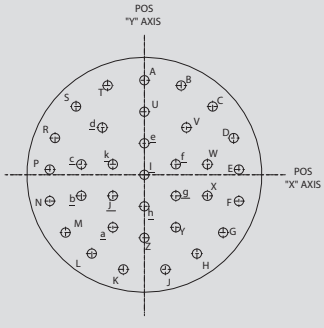

I.D. No	Location X	Location Y	I.D. No.	Location X	Location Y
A	.000	.450	U	.000	.300
B	.175	.425	V	.200	.225
C	.325	.325	W	.300	.050
D	.425	.175	X	.300	-.100
E	.450	.025	Y	.150	-.250
F	.450	-.125	Z	.000	-.300
G	.375	-.275	a	-.150	-.25
H	.250	-.375	b	-.300	-.100
J	.100	-.450	c	-.300	.050
K	-.100	-.450	d	-.200	.225
L	-.250	-.375	e	.000	.150
M	-.375	-.275	f	.150	.050
N	-.450	-.125	g	.150	-.100
P	-.450	.025	h	.000	-.150
R	-.425	.175	j	-.150	-.100
S	-.325	.325	k	-.150	.050
T	-.175	.425	l	.000	.000

Based on MIL-STD-1560 and other specs, contact factory for more details

© 2022 Glenair, Inc • 1211 Air Way, Glendale, CA 91201 • 818-247-6000 • www.glenair.com • U.S. CAGE code 06324 • SuperNine™ Catalog
Dimensions in Inches (millimeters) are subject to change without notice.

SuperNine®

MIL-DTL-38999 Series III Type

Standard PCB footprints

Mating face of pin insert shown (socket will be opposite)

23-35

100 #22D

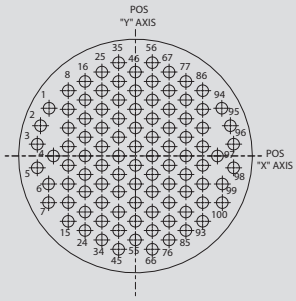

I.D. No.	Location X	Location Y	I.D. No.	Location X	Location Y	I.D. No.	Location X	Location Y
1	-.428	.241	34	-.166	-.427	67	.166	.428
2	-.467	.154	35	-.083	.475	68	.166	.333
3	-.488	.061	36	-.083	.380	69	.166	.238
4	-.415	.000	37	-.083	.285	70	.166	.143
5	-.488	-.061	38	-.083	.190	71	.166	.048
6	-.428	-.142	39	-.083	.095	72	.166	-.047
7	-.428	-.237	40	-.083	.000	73	.166	-.142
8	-.332	.333	41	-.083	-.095	74	.166	-.237
9	-.332	.238	42	-.083	-.190	75	.166	-.332
10	-.332	.143	43	-.083	-.285	76	.166	-.427
11	-.332	.048	44	-.083	-.380	77	.249	.380
12	-.332	-.047	45	-.083	-.475	78	.249	.285
13	-.332	-.142	46	.000	.428	79	.249	.190
14	-.332	-.237	47	.000	.333	80	.249	.095
15	-.332	-.332	48	.000	.238	81	.249	.000
16	-.249	.380	49	.000	.143	82	.249	-.095
17	-.249	.285	50	.000	.048	83	.249	-.190
18	-.249	.190	51	.000	-.047	84	.249	-.285
19	-.249	.095	52	.000	-.142	85	.249	-.380
20	-.249	.000	53	.000	-.237	86	.332	.333
21	-.249	-.095	54	.000	-.332	87	.332	.238
22	-.249	-.190	55	.000	-.427	88	.332	.143
23	-.249	-.285	56	.083	.475	89	.332	.048
24	-.249	-.380	57	.083	.380	90	.332	-.047
25	-.166	.428	58	.083	.285	91	.332	-.142
26	-.166	.333	59	.083	.190	92	.332	-.237
27	-.166	.238	60	.083	.095	93	.332	-.332
28	-.166	.143	61	.083	.000	94	.428	.241
29	-.166	.048	62	.083	-.095	95	.467	.154
30	-.166	-.047	63	.083	-.190	96	.488	.061
31	-.166	-.142	64	.083	-.285	97	.415	.000
32	-.166	-.237	65	.083	-.380	98	.488	-.061
33	-.166	-.332	66	.083	-.475	99	.428	-.142
						100	.428	-.237

23-36

36 #20

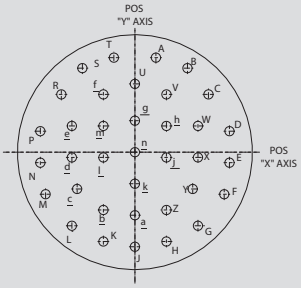

I.D. No.	Location X	Location Y	I.D. No.	Location X	Location Y
A	.100	.450	V	.150	.275
B	.250	.400	W	.300	.125
C	.350	.275	X	.300	-.025
D	.450	.100	Y	.275	-.175
E	.450	-.050	Z	.150	-.275
F	.425	-.200	a	.000	-.300
G	.300	-.350	b	-.150	-.275
H	.150	-.425	c	-.275	-.175
J	.000	-.450	d	-.300	-.025
K	-.150	-.425	e	-.300	.125
L	-.300	-.350	f	-.150	.275
M	-.425	-.200	g	.000	.150
N	-.450	-.050	h	.150	.125
P	-.450	.100	j	.150	-.025
R	-.350	.275	k	.000	-.150
S	-.250	.400	l	-.150	-.025
T	-.100	.450	m	-.150	.125
U	.000	.325	n	.000	.000

Based on MIL-STD-1560 and other specs, contact factory for more details

© 2022 Glenair, Inc • 1211 Air Way, Glendale, CA 91201 • 818-247-6000 • www.glenair.com • U.S. CAGE code 06324 • SuperNIne™ Catalog
Dimensions in Inches (millimeters) are subject to change without notice.

SuperNine®

MIL-DTL-38999 Series III Type

Standard PCB footprints

Mating face of pin insert shown (socket will be opposite)

23-53

53 #20

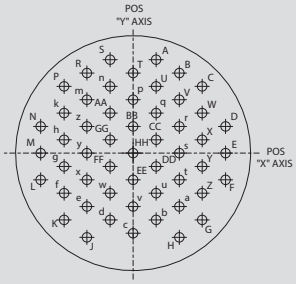

I.D. No.	Location		I.D. No.	Location		I.D. No.	Location	
	X	Y		X	Y		X	Y
A	.112	.455	V	.225	.260	r	.225	.130
B	.225	.390	W	.336	.195	s	.225	.000
C	.336	.325	X	.336	.065	t	.225	-.130
D	.450	.130	Y	.336	-.065	u	.112	-.195
E	.450	.000	Z	.336	-.195	v	.000	-.260
F	.450	-.130	a	.225	-.260	w	-.112	-.195
G	.336	-.325	b	.112	-.325	x	-.225	-.130
H	.225	-.410	c	.000	-.390	y	-.225	.000
J	-.225	-.410	d	-.112	-.325	z	-.225	.130
K	-.336	-.325	e	-.225	-.260	AA	-.112	.195
L	-.450	-.130	f	-.336	-.195	BB	.000	.130
M	-.450	.000	g	-.336	-.065	CC	.112	.065
N	-.450	.130	h	-.336	.065	DD	.112	-.065
P	-.336	.325	k	-.336	.195	EE	.000	-.130
R	-.225	.390	m	-.225	.260	FF	-.112	-.065
S	-.112	.455	n	-.112	.325	GG	-.112	.065
T	.000	.390	p	.000	.260	HH	.000	.000
U	.112	.325	q	.112	.195			

23-55

55 #20

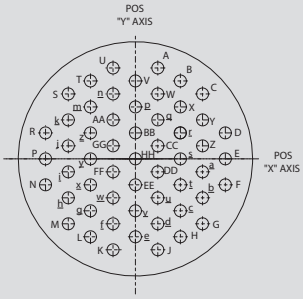

I.D. No.	Location		I.D. No.	Location	
	X	Y		X	Y
A	.112	.455	f	-.225	-.325
B	.225	.390	g	-.336	-.260
C	.336	.325	h	-.336	-.195
D	.450	.130	i	-.336	-.065
E	.450	.000	j	-.336	.065
F	.450	-.130	k	-.336	.195
G	.336	-.325	m	-.225	.260
H	.225	-.390	n	-.112	.325
J	.112	-.455	p	.000	.260
K	-.112	-.455	q	.112	.195
L	-.225	-.390	r	.225	.130
M	-.336	-.325	s	.225	.000
N	-.450	-.130	t	.225	-.130
P	-.450	.000	u	.112	-.195
R	-.450	.130	v	.000	-.260
S	-.336	.325	w	-.112	-.195
T	-.225	.390	x	-.225	-.130
U	-.112	.455	y	-.225	.000
V	.000	.390	z	-.225	.130
W	.112	.325	AA	-.112	.195
X	.225	.260	BB	.000	.130
Y	.336	.195	CC	.112	.065
Z	.336	.065	DD	.112	-.065
a	.336	-.065	EE	.000	-.130
b	.336	-.195	FF	-.112	-.065
c	.225	-.260	GG	-.112	.065
d	.112	-.325	HH	.000	.000
e	-.000	-.390			

Based on MIL-STD-1560 and other specs, contact factory for more details

© 2022 Glenair, Inc • 1211 Air Way, Glendale, CA 91201 • 818-247-6000 • www.glenair.com • U.S. CAGE code 06324 • SuperNine™ Catalog
Dimensions in Inches (millimeters) are subject to change without notice.

ADVANCED PERFORMANCE

SuperNine®

MIL-DTL-38999 Series III Type

Standard PCB footprints

Mating face of pin insert shown (socket will be opposite)

23-97
16 #16

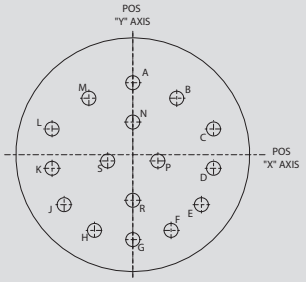

I.D. No.	Location		I.D. No.	Location	
	X	Y		X	Y
A	.000	.344	J	-.328	-.239
B	.210	.270	K	-.400	-.065
C	.386	.123	L	-.386	.123
D	.400	-.065	M	-.210	.270
E	.328	-.239	N	.000	.156
F	.183	-.362	P	.120	-.030
G	.000	-.406	R	.000	-.218
H	-.183	-.362	S	-.120	-.030

23-99
11 #16

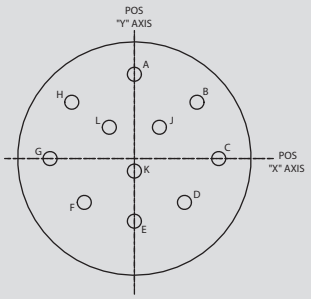

I.D. No.	Location		I.D. No.	Location	
	X	Y		X	Y
A	.000	.404	G	-.404	.000
B	.300	.270	H	-.300	.270
C	.404	.000	J	.120	.150
D	.240	-.210	K	.000	-.060
E	.000	-.300	L	-.120	.150
F	-.240	-.210			

25-19
19 #12

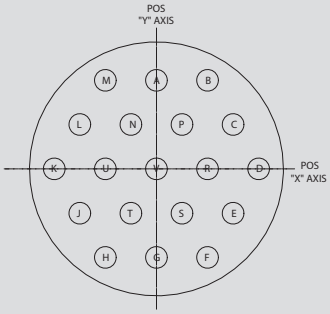

I.D. No.	Location		I.D. No.	Location	
	X	Y		X	Y
A	0	.409	L	-.354	.205
B	.236	.409	M	-.236	.409
C	.354	.205	N	-.118	.205
D	.472	0	P	.118	.205
E	.354	-.205	R	.236	0
F	.236	-.409	S	.118	-.205
G	0	-.409	T	-.118	-.205
H	-.236	-.409	U	-.236	0
J	-.354	-.205	V	0	0
K	-.472	0			

25-29
29 #16

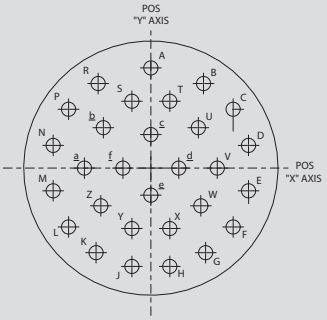

I.D. No.	Location				
	X	Y			
A	.000	.481	S	-.091	.321
B	.258	.406	T	.091	.321
C	.395	.277	U	.228	.194
D	.469	.109	V	.319	.000
E	.469	-.109	W	.240	-.181
F	.395	-.277	X	.091	-.290
G	.263	-.406	Y	-.091	-.290
H	.091	-.472	Z	-.240	-.181
J	-.091	-.472	a	-.319	.000
K	-.263	-.406	b	-.228	.194
L	-.395	-.277	c	.000	.161
M	-.469	-.109	d	.134	.000
N	-.469	.109	e	.000	-.130
P	-.395	.277	f	-.134	.000
R	-.258	.406			

Based on MIL-STD-1560 and other specs, contact factory for more details

© 2022 Glenair, Inc • 1211 Air Way, Glendale, CA 91201 • 818-247-6000 • www.glenair.com • U.S. CAGE code 06324 • SuperNIne™ Catalog
Dimensions in Inches (millimeters) are subject to change without notice.

SuperNine®

MIL-DTL-38999 Series III Type

Standard PCB footprints

Mating face of pin insert shown (socket will be opposite)

25-35

128 #22D

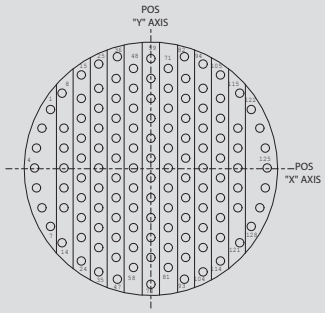

I.D. No.	Location		I.D. No.	Location		I.D. No.	Location	
	X	Y		X	Y		X	Y
1	-.479	.279	44	-.166	-.237	87	.166	.047
2	-.520	.190	45	-.166	-.332	88	.166	-.047
3	-.546	.095	46	-.166	-.427	89	.166	-.142
4	-.555	.000	47	-.166	-.522	90	.166	-.237
5	-.546	-.095	48	-.083	.475	91	.166	-.332
6	-.520	-.190	49	-.083	.380	92	.166	-.427
7	-.479	-.279	50	-.083	.285	93	.166	-.522
8	-.424	.357	51	-.083	.190	94	.249	.496
9	-.415	.190	52	-.083	.095	95	.249	.380
10	-.415	.095	53	-.083	.000	96	.249	.285
11	-.415	.000	54	-.083	-.095	97	.249	.190
12	-.415	-.095	55	-.083	-.190	98	.249	-.095
13	-.415	-.190	56	-.083	-.285	99	.249	.000
14	-.424	-.357	57	-.083	-.380	100	.249	-.095
15	-.332	.444	58	-.083	-.475	101	.249	-.190
16	-.332	.332	59	.000	.522	102	.249	-.285
17	-.332	.237	60	.000	.427	103	.249	-.380
18	-.332	.142	61	.000	.332	104	.249	-.475
19	-.332	.047	62	.000	.237	105	.332	.444
20	-.332	-.047	63	.000	.142	106	.332	.332
21	-.332	-.142	64	.000	.047	107	.332	.237
22	-.332	-.237	65	.000	-.047	108	.332	.142
23	-.332	-.332	66	.000	-.142	109	.332	.047
24	-.332	-.427	67	.000	-.237	110	.332	-.047
25	-.249	.496	68	.000	-.332	111	.332	-.142
26	-.249	.380	69	.000	-.427	112	.332	-.237
27	-.249	.285	70	.000	-.555	113	.332	-.332
28	-.249	.190	71	.083	.475	114	.332	-.427
29	-.249	.095	72	.083	.380	115	.424	.357
30	-.249	.000	73	.083	.285	116	.415	.190
31	-.249	-.095	74	.083	.190	117	.415	.095
32	-.249	-.190	75	.083	.095	118	.415	.000
33	-.249	-.285	76	.083	.000	119	.415	-.095
34	-.249	-.380	77	.083	-.095	120	.415	-.190
35	-.249	-.475	78	.083	-.190	121	.424	-.357
36	-.160	.531	79	.083	-.285	122	.479	.279
37	-.166	.427	80	.083	-.380	123	.520	.190
38	-.166	.332	81	.083	-.475	124	.546	.095
39	-.166	.237	82	.160	.531	125	.555	.000
40	-.166	.142	83	.166	.427	126	.546	-.095
41	-.166	.047	84	.166	.332	127	.520	-.190
42	-.166	-.047	85	.166	.237	128	.479	-.279
43	-.166	-.142	86	.166	.142			

Based on MIL-STD-1560 and other specs, contact factory for more details

© 2022 Glenair, Inc • 1211 Air Way, Glendale, CA 91201 • 818-247-6000 • www.glenair.com • U.S. CAGE code 06324 • SuperNine™ Catalog
Dimensions in Inches (millimeters) are subject to change without notice.

SuperNine®

MIL-DTL-38999 Series III Type

Standard PCB footprints

Mating face of pin insert shown (socket will be opposite)

25-37

37 #16

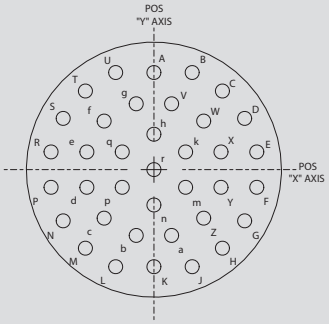

I.D. No.	Location X	Location Y	I.D. No.	Location X	Location Y	I.D. No.	Location X	Location Y
A	.000	.472	P	-.500	-.086	d	-.326	-.086
B	.186	.472	R	-.500	.086	e	-.326	.086
C	.333	.382	S	-.441	.249	f	-.242	.236
D	.441	.249	T	-.333	.382	g	-.086	.320
E	.500	.086	U	-.186	.472	h	.000	.172
F	.500	-.086	V	.086	.320	k	.154	.086
G	.441	-.249	W	.242	.236	m	.154	-.086
H	.333	-.382	X	.326	.086	n	.000	-.172
J	.186	-.472	Y	.326	-.086	p	-.154	-.086
K	.000	-.472	Z	.242	-.236	q	-.154	.086
L	-.186	-.472	a	.086	-.320	r	.000	.000
M	-.333	-.382	b	-.086	-.320			
N	-.441	-.249	c	-.242	-.236			

25-61

61 #20

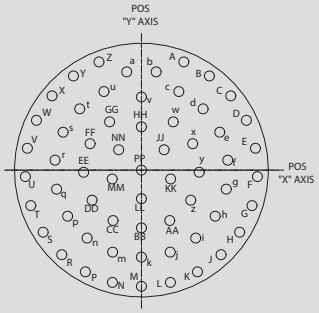

I.D. No.	Location X	Location Y	I.D. No.	Location X	Location Y
A	.196	.500	i	.251	-.314
B	.314	.435	j	.133	-.379
C	.413	.343	k	.000	-.402
D	.485	.230	m	-.133	-.379
E	.527	.101	n	-.251	-.314
F	.536	-.030	p	-.341	-.213
G	.511	-.164	q	-.392	-.088
H	.454	-.287	r	-.399	.046
J	.368	-.391	s	-.362	.175
K	.259	-.470	t	-.285	.283
L	.134	-.519	u	-.173	.363
M	.000	-.537	v	.000	.338
N	-.134	-.519	w	.147	.223
P	-.259	-.470	x	.237	.122
R	-.368	-.391	y	.267	-.010
S	-.454	-.287	z	.228	-.139
T	-.511	-.164	AA	.131	-.233
U	-.536	-.030	BB	.000	-.267
V	-.527	.101	CC	-.131	-.233
W	-.485	.230	DD	-.228	-.139
X	-.413	.343	EE	-.267	-.010
Y	-.314	.435	FF	-.237	.122
Z	-.196	.500	GG	-.147	.223
a	-.068	.454	HH	.000	.200
b	.068	.454	JJ	.105	.094
c	.173	.363	KK	.135	-.041
d	.285	.283	LL	.000	-.132
e	.362	.175	MM	-.135	-.041
f	.399	.046	NN	-.105	.094
g	.392	-.088	PP	.000	.000
h	.341	-.213			

Based on MIL-STD-1560 and other specs, contact factory for more details

© 2022 Glenair, Inc • 1211 Air Way, Glendale, CA 91201 • 818-247-6000 • www.glenair.com • U.S. CAGE code 06324 • SuperNIne™ Catalog
Dimensions in Inches (millimeters) are subject to change without notice.

SuperNine®

MIL-DTL-38999 Series III Type

High-density PCB footprints

Mating face of pin insert shown (socket will be opposite)

9-23

9 #23

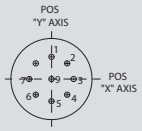

I.D. No.	Location		I.D. No.	Location	
	X	Y		X	Y
1	.000	.105	6	-.074	-.074
2	.074	.074	7	-.105	.000
3	.105	.000	8	-.074	.074
4	.074	-.074	9	.000	.000
5	.000	-.105			

11-23

19 #23

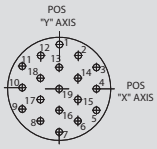

I.D. No.	Location		I.D. No.	Location	
	X	Y		X	Y
1	.000 (0.00)	.161 (4.08)	11	-.139 (3.53)	.080 (2.04)
2	.070 (1.77)	.120 (3.06)	12	-.070 (1.77)	.120 (3.06)
3	.139 (3.53)	.080 (2.04)	13	.000 (0.00)	.080 (2.04)
4	.139 (3.53)	.000 (0.00)	14	.070 (1.77)	.040 (1.02)
5	.139 (3.53)	-.080 (2.04)	15	.070 (1.77)	-.040 (1.02)
6	.070 (1.77)	-.120 (3.06)	16	.000 (0.00)	-.080 (2.04)
7	.000 (0.00)	-.161 (4.08)	17	-.070 (1.77)	-.040 (1.02)
8	-.070 (1.77)	-.120 (3.06)	18	-.070 (1.77)	.040 (1.02)
9	-.139 (3.53)	-.080 (2.04)	19	.000 (0.00)	.000 (0.00)
10	-.139 (3.53)	.000 (0.00)			

13-23

32 #23

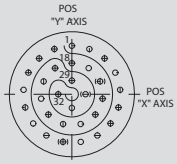

I.D. No.	Location		I.D. No.	Location	
	X	Y		X	Y
1	.000	.224	17	-.081	.209
2	.081	.209	18	.000	.143
3	.151	.165	19	.078	.121
4	.200	.100	20	.130	.059
5	.223	.021	21	.142	-.021
6	.215	-0.061	22	.108	-.094
7	.178	-0.135	23	.041	-.137
8	.118	-0.190	24	-.041	-.137
9	.041	-0.220	25	-.108	-.094
10	-0.041	-0.220	26	-.142	-.021
11	-0.118	-0.190	27	-.130	.059
12	-0.178	-0.135	28	-.078	.121
13	-0.215	-0.061	29	.000	.063
14	-0.223	.021	30	.063	.000
15	-0.200	.100	31	.000	-.063
16	-0.151	.165	32	-.063	.000

Based on MIL-STD-1560 and other specs, contact factory for more details

© 2022 Glenair, Inc • 1211 Air Way, Glendale, CA 91201 • 818-247-6000 • www.glenair.com • U.S. CAGE code 06324 • SuperNine™ Catalog
Dimensions in Inches (millimeters) are subject to change without notice.

SuperNine®

MIL-DTL-38999 Series III Type

High-density PCB footprints

Mating face of pin insert shown (socket will be opposite)

15-23

55 #23

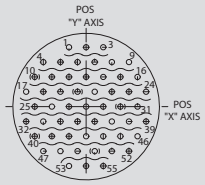

I.D. No.	Location		I.D. No.	Location		I.D. No.	Location	
	X	Y		X	Y		X	Y
1	-0.080	.278	20	-0.040	.070	39	.281	-0.070
2	.000	.278	21	.040	.070	40	-0.241	-0.139
3	.080	.278	22	.121	.070	41	-0.161	-0.139
4	-0.201	.209	23	.201	.070	42	-0.080	-0.139
5	-0.121	.209	24	.281	.070	43	.000	-0.139
6	-0.040	.209	25	-0.241	.000	44	.080	-0.139
7	.040	.209	26	-0.161	.000	45	.161	-0.139
8	.121	.209	27	-0.080	.000	46	.241	-0.139
9	.201	.209	28	.000	.000	47	-0.201	-0.209
10	-0.241	.139	29	.080	.000	48	-0.121	-0.209
11	-0.161	.139	30	.161	.000	49	-0.040	-0.209
12	-0.080	.139	31	.241	.000	50	.040	-0.209
13	.000	.139	32	-0.281	-0.070	51	.121	-0.209
14	.080	.139	33	-0.201	-0.070	52	.201	-0.209
15	.161	.139	34	-0.121	-0.070	53	-0.080	-0.278
16	.241	.139	35	-0.040	-0.070	54	.000	-0.278
17	-0.281	.070	36	.040	-0.070	55	.080	-0.278
18	-0.201	.070	37	.121	-0.070			
19	-0.121	.070	38	.201	-0.070			

17-23

73 #23

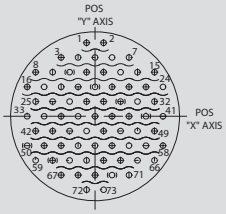

I.D. No.	Location		I.D. No.	Location		I.D. No.	Location	
	X	Y		X	Y		X	Y
1	-0.040	.348	26	-0.201	.070	51	-0.241	-0.139
2	.040	.348	27	-0.121	.070	52	-0.161	-0.139
3	-0.161	.278	28	-0.040	.070	53	-0.080	-0.139
4	-0.080	.278	29	.040	.070	54	.000	-0.139
5	.000	.278	30	.121	.070	55	.080	-0.139
6	.080	.278	31	.201	.070	56	.161	-0.139
7	.161	.278	32	.281	.070	57	.241	-0.139
8	-0.281	.209	33	-0.321	.000	58	.321	-0.139
9	-0.201	.209	34	-0.241	.000	59	-0.281	-0.209
10	-0.121	.209	35	-0.161	.000	60	-0.201	-0.209
11	-0.040	.209	36	-0.080	.000	61	-0.121	-0.209
12	.040	.209	37	.000	.000	62	-0.040	-0.209
13	.121	.209	38	.080	.000	63	.040	-0.209
14	.201	.209	39	.161	.000	64	.121	-0.209
15	.281	.209	40	.241	.000	65	.201	-0.209
16	-0.321	.139	41	.321	.000	66	.281	-0.209
17	-0.241	.139	42	-0.281	-0.070	67	-0.161	-0.278
18	-0.161	.139	43	-0.201	-0.070	68	-0.080	-0.278
19	-0.080	.139	44	-0.121	-0.070	69	.000	-0.278
20	.000	.139	45	-0.040	-0.070	70	.080	-0.278
21	.080	.139	46	.040	-0.070	71	.161	-0.278
22	.161	.139	47	.121	-0.070	72	-0.040	-0.348
23	.241	.139	48	.201	-0.070	73	.040	-0.348
24	.321	.139	49	.281	-0.070			
25	-0.281	.070	50	-0.321	-0.139			

Based on MIL-STD-1560 and other specs, contact factory for more details

© 2022 Glenair, Inc • 1211 Air Way, Glendale, CA 91201 • 818-247-6000 • www.glenair.com • U.S. CAGE code 06324 • SuperNIne™ Catalog
Dimensions in Inches (millimeters) are subject to change without notice.

SuperNine®

MIL-DTL-38999 Series III Type

High-density PCB footprints

Mating face of pin insert shown (socket will be opposite)

19-23

88 #23

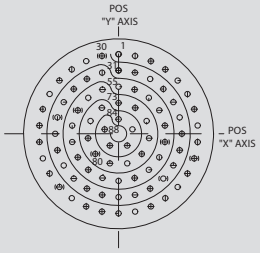

I.D. No.	Location		I.D. No.	Location		I.D. No.	Location	
	X	Y		X	Y		X	Y
1	.000	.393	31	.000	.313	61	.201	-0.116
2	.082	.385	32	.081	.302	62	.150	-0.178
3	.160	.359	33	.156	.271	63	.080	-0.219
4	.231	.318	34	.221	.221	64	.000	-0.233
5	.292	.263	35	.271	.156	65	-0.080	-0.219
6	.341	.197	36	.302	.081	66	-0.150	-0.178
7	.374	.122	37	.313	.000	67	-0.201	-0.116
8	.391	.041	38	.302	-0.081	68	-0.229	-0.041
9	.391	-0.041	39	.271	-0.156	69	-0.229	.041
10	.374	-0.122	40	.221	-0.221	70	-0.201	.116
11	.341	-0.197	41	.156	-0.271	71	-0.150	.178
12	.292	-0.263	42	.081	-0.302	72	-0.080	.219
13	.231	-0.318	43	.000	-0.313	73	.000	.152
14	.160	-0.359	44	-0.081	-0.302	74	.082	.128
15	.082	-0.385	45	-0.156	-0.271	75	.139	.063
16	.000	-0.393	46	-0.221	-0.221	76	.151	-0.022
17	-0.082	-0.385	47	-0.271	-0.156	77	.115	-0.100
18	-0.160	-0.359	48	-0.302	-0.081	78	.043	-0.146
19	-0.231	-0.318	49	-0.313	.000	79	-0.043	-0.146
20	-0.292	-0.263	50	-0.302	.081	80	-0.115	-0.100
21	-0.341	-0.197	51	-0.271	.156	81	-0.151	-0.022
22	-0.374	-0.122	52	-0.221	.221	82	-0.139	.063
23	-0.391	-0.041	53	-0.156	.271	83	-0.082	.128
24	-0.391	.041	54	-0.081	.302	84	.000	.072
25	-0.374	.122	55	.000	.233	85	.069	.022
26	-0.341	.197	56	.080	.219	86	.043	-0.058
27	-0.292	.263	57	.150	.178	87	-0.043	-0.058
28	-0.231	.318	58	.201	.116	88	-0.069	.022
29	-0.160	.359	59	.229	.041			
30	-0.082	.385	60	.229	-0.041			

Based on MIL-STD-1560 and other specs, contact factory for more details

© 2022 Glenair, Inc • 1211 Air Way, Glendale, CA 91201 • 818-247-6000 • www.glenair.com • U.S. CAGE code 06324 • SuperNine™ Catalog
Dimensions in Inches (millimeters) are subject to change without notice.

SuperNine®

MIL-DTL-38999 Series III Type

High-density PCB footprints

Mating face of pin insert shown (socket will be opposite)

21-23

121 #23

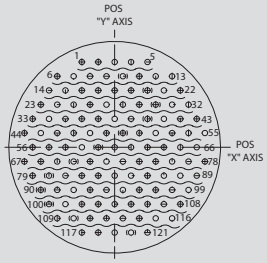

I.D. No.	Location		I.D. No.	Location		I.D. No.	Location	
	X	Y		X	Y		X	Y
1	-0.161	.417	41	.241	.139	81	-0.241	-0.139
2	-0.080	.417	42	.321	.139	82	-0.161	-0.139
3	.000	.417	43	.402	.139	83	-0.080	-0.139
4	.080	.417	44	-0.442	.070	84	.000	-0.139
5	.161	.417	45	-0.361	.070	85	.080	-0.139
6	-0.281	.348	46	-0.281	.070	86	.161	-0.139
7	-0.201	.348	47	-0.201	.070	87	.241	-0.139
8	-0.121	.348	48	-0.121	.070	88	.321	-0.139
9	-0.040	.348	49	-0.040	.070	89	.402	-0.139
10	.040	.348	50	.040	.070	90	-0.361	-0.209
11	.121	.348	51	.121	.070	91	-0.281	-0.209
12	.201	.348	52	.201	.070	92	-0.201	-0.209
13	.281	.348	53	.281	.070	93	-0.121	-0.209
14	-0.321	.278	54	.361	.070	94	-0.040	-0.209
15	-0.241	.278	55	.442	.070	95	.040	-0.209
16	-0.161	.278	56	-0.402	.000	96	.121	-0.209
17	-0.080	.278	57	-0.321	.000	97	.201	-0.209
18	.000	.278	58	-0.241	.000	98	.281	-0.209
19	.080	.278	59	-0.161	.000	99	.361	-0.209
20	.161	.278	60	-0.080	.000	100	-0.321	-0.278
21	.241	.278	61	.000	.000	101	-0.241	-0.278
22	.321	.278	62	.080	.000	102	-0.161	-0.278
23	-0.361	.209	63	.161	.000	103	-0.080	-0.278
24	-0.281	.209	64	.241	.000	104	.000	-0.278
25	-0.201	.209	65	.321	.000	105	.080	-0.278
26	-0.121	.209	66	.402	.000	106	.161	-0.278
27	-0.040	.209	67	-0.442	-0.070	107	.241	-0.278
28	.040	.209	68	-0.361	-0.070	108	.321	-0.278
29	.121	.209	69	-0.281	-0.070	109	-0.281	-0.348
30	.201	.209	70	-0.201	-0.070	110	-0.201	-0.348
31	.281	.209	71	-0.121	-0.070	111	-0.121	-0.348
32	.361	.209	72	-0.040	-0.070	112	-0.040	-0.348
33	-0.402	.139	73	.040	-0.070	113	.040	-0.348
34	-0.321	.139	74	.121	-0.070	114	.121	-0.348
35	-0.241	.139	75	.201	-0.070	115	.201	-0.348
36	-0.161	.139	76	.281	-0.070	116	.281	-0.348
37	-0.080	.139	77	.361	-0.070	117	-0.161	-0.417
38	.000	.139	78	.442	-0.070	118	-0.080	-0.417
39	.080	.139	79	-0.402	-0.139	119	.000	-0.417
40	.161	.139	80	-0.321	-0.139	120	.080	-0.417
						121	.161	-0.417

Based on MIL-STD-1560 and other specs, contact factory for more details

© 2022 Glenair, Inc • 1211 Air Way, Glendale, CA 91201 • 818-247-6000 • www.glenair.com • U.S. CAGE code 06324 • SuperNIne™ Catalog
Dimensions in Inches (millimeters) are subject to change without notice.

SuperNine®

MIL-DTL-38999 Series III Type

High-density PCB footprints

Mating face of pin insert shown (socket will be opposite)

23-23

151 #23

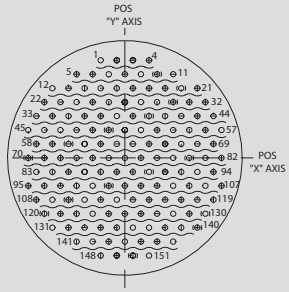

I.D. No.	Location		I.D. No.	Location		I.D. No.	Location	
	X	Y		X	Y		X	Y
1	-0.121	.487	52	.080	.139	103	.161	-0.139
2	-0.040	.487	53	.161	.139	104	.241	-0.139
3	.040	.487	54	.241	.139	105	.321	-0.139
4	.121	.487	55	.321	.139	106	.402	-0.139
5	-0.241	.417	56	.402	.139	107	.482	-0.139
6	-0.161	.417	57	.482	.139	108	-0.442	-0.209
7	-0.080	.417	58	-0.442	.070	109	-0.361	-0.209
8	.000	.417	59	-0.361	.070	110	-0.281	-0.209
9	.080	.417	60	-0.281	.070	111	-0.201	-0.209
10	.161	.417	61	-0.201	.070	112	-0.121	-0.209
11	.241	.417	62	-0.121	.070	113	-0.040	-0.209
12	-0.361	.348	63	-0.040	.070	114	.040	-0.209
13	-0.281	.348	64	.040	.070	115	.121	-0.209
14	-0.201	.348	65	.121	.070	116	.201	-0.209
15	-0.121	.348	66	.201	.070	117	.281	-0.209
16	-0.040	.348	67	.281	.070	118	.361	-0.209
17	.040	.348	68	.361	.070	119	.442	-0.209
18	.121	.348	69	.442	.070	120	-0.402	-0.278
19	.201	.348	70	-0.482	.000	121	-0.321	-0.278
20	.281	.348	71	-0.402	.000	122	-0.241	-0.278
21	.361	.348	72	-0.321	.000	123	-0.161	-0.278
22	-0.402	.278	73	-0.241	.000	124	-0.080	-0.278
23	-0.321	.278	74	-0.161	.000	125	.000	-0.278
24	-0.241	.278	75	-0.080	.000	126	.080	-0.278
25	-0.161	.278	76	.000	.000	127	.161	-0.278
26	-0.080	.278	77	.080	.000	128	.241	-0.278
27	.000	.278	78	.161	.000	129	.321	-0.278
28	.080	.278	79	.241	.000	130	.402	-0.278
29	.161	.278	80	.321	.000	131	-0.361	-0.348
30	.241	.278	81	.402	.000	132	-0.281	-0.348
31	.321	.278	82	.482	.000	133	-0.201	-0.348
32	.402	.278	83	-0.442	-0.070	134	-0.121	-0.348
33	-0.442	.209	84	-0.361	-0.070	135	-0.040	-0.348
34	-0.361	.209	85	-0.281	-0.070	136	.040	-0.348
35	-0.281	.209	86	-0.201	-0.070	137	.121	-0.348
36	-0.201	.209	87	-0.121	-0.070	138	.201	-0.348
37	-0.121	.209	88	-0.040	-0.070	139	.281	-0.348
38	-0.040	.209	89	.040	-0.070	140	.361	-0.348
39	.040	.209	90	.121	-0.070	141	-0.241	-0.417
40	.121	.209	91	.201	-0.070	142	-0.161	-0.417
41	.201	.209	92	.281	-0.070	143	-0.080	-0.417
42	.281	.209	93	.361	-0.070	144	.000	-0.417
43	.361	.209	94	.442	-0.070	145	.080	-0.417
44	.442	.209	95	-0.482	-0.139	146	.161	-0.417
45	-0.482	.139	96	-0.402	-0.139	147	.241	-0.417
46	-0.402	.139	97	-0.321	-0.139	148	-0.121	-0.487
47	-0.321	.139	98	-0.241	-0.139	149	-0.040	-0.487
48	-0.241	.139	99	-0.161	-0.139	150	.040	-0.487
49	-0.161	.139	100	-0.080	-0.139	151	.121	-0.487
50	-0.080	.139	101	.000	-0.139			
51	.000	.139	102	.080	-0.139			

Based on MIL-STD-1560 and other specs, contact factory for more details

© 2022 Glenair, Inc • 1211 Air Way, Glendale, CA 91201 • 818-247-6000 • www.glenair.com • U.S. CAGE code 06324 • SuperNine™ Catalog
Dimensions in Inches (millimeters) are subject to change without notice.

SuperNine®

MIL-DTL-38999 Series III Type

High-density PCB footprints

Mating face of pin insert shown (socket will be opposite)

25-23

187 #23

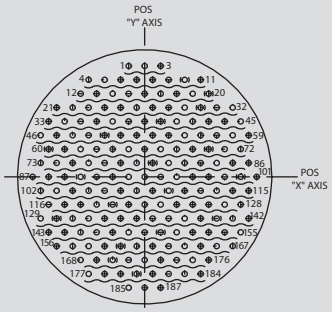

I.D. No.	Location X	Location Y	I.D. No.	Location X	Location Y	I.D. No.	Location X	Location Y	I.D. No.	Location X	Location Y
1	-0.080	.556	25	-0.121	.348	49	-0.281	.209	73	-0.522	.070
2	.000	.556	26	-0.040	.348	50	-0.201	.209	74	-0.442	.070
3	.080	.556	27	.040	.348	51	-0.121	.209	75	-0.361	.070
4	-0.281	.487	28	.121	.348	52	-0.040	.209	76	-0.281	.070
5	-0.201	.487	29	.201	.348	53	.040	.209	77	-0.201	.070
6	-0.121	.487	30	.281	.348	54	.121	.209	78	-0.121	.070
7	-0.040	.487	31	.361	.348	55	.201	.209	79	-0.040	.070
8	.040	.487	32	.442	.348	56	.281	.209	80	.040	.070
9	.121	.487	33	-0.482	.278	57	.361	.209	81	.121	.070
10	.201	.487	34	-0.402	.278	58	.442	.209	82	.201	.070
11	.281	.487	35	-0.321	.278	59	.522	.209	83	.281	.070
12	-0.321	.417	36	-0.241	.278	60	-0.482	.139	84	.361	.070
13	-0.241	.417	37	-0.161	.278	61	-0.402	.139	85	.442	.070
14	-0.161	.417	38	-0.080	.278	62	-0.321	.139	86	.522	.070
15	-0.080	.417	39	.000	.278	63	-0.241	.139	87	-0.562	.000
16	.000	.417	40	.080	.278	64	-0.161	.139	88	-0.482	.000
17	.080	.417	41	.161	.278	65	-0.080	.139	89	-0.402	.000
18	.161	.417	42	.241	.278	66	.000	.139	90	-0.321	.000
19	.241	.417	43	.321	.278	67	.080	.139	91	-0.241	.000
20	.321	.417	44	.402	.278	68	.161	.139	92	-0.161	.000
21	-0.442	.348	45	.482	.278	69	.241	.139	93	-0.080	.000
22	-0.361	.348	46	-0.522	.209	70	.321	.139	94	.000	.000
23	-0.281	.348	47	-0.442	.209	71	.402	.139	95	.080	.000
24	-0.201	.348	48	-0.361	.209	72	.482	.139	96	.161	.000
97	.241	.000	121	-0.080	-0.139	145	-0.321	-0.278	169	-0.241	-0.417
98	.321	.000	122	.000	-0.139	146	-0.241	-0.278	170	-0.161	-0.417
99	.402	.000	123	.080	-0.139	147	-0.161	-0.278	171	-0.080	-0.417
100	.482	.000	124	.161	-0.139	148	-0.080	-0.278	172	.000	-0.417
101	.562	.000	125	.241	-0.139	149	.000	-0.278	173	.080	-0.417
102	-0.522	-0.070	126	.321	-0.139	150	.080	-0.278	174	.161	-0.417
103	-0.442	-0.070	127	.402	-0.139	151	.161	-0.278	175	.241	-0.417
104	-0.361	-0.070	128	.482	-0.139	152	.241	-0.278	176	.321	-0.417
105	-0.281	-0.070	129	-0.522	-0.209	153	.321	-0.278	177	-0.281	-0.487
106	-0.201	-0.070	130	-0.442	-0.209	154	.402	-0.278	178	-0.201	-0.487
107	-0.121	-0.070	131	-0.361	-0.209	155	.482	-0.278	179	-0.121	-0.487
108	-0.040	-0.070	132	-0.281	-0.209	156	-0.442	-0.348	180	-0.040	-0.487
109	.040	-0.070	133	-0.201	-0.209	157	-0.361	-0.348	181	.040	-0.487
110	.121	-0.070	134	-0.121	-0.209	158	-0.281	-0.348	182	.121	-0.487
111	.201	-0.070	135	-0.040	-0.209	159	-0.201	-0.348	183	.201	-0.487
112	.281	-0.070	136	.040	-0.209	160	-0.121	-0.348	184	.281	-0.487
113	.361	-0.070	137	.121	-0.209	161	-0.040	-0.348	185	-0.080	-0.556
114	.442	-0.070	138	.201	-0.209	162	.040	-0.348	186	.000	-0.556
115	.522	-0.070	139	.281	-0.209	163	.121	-0.348	187	.080	-0.556
116	-0.482	-0.139	140	.361	-0.209	164	.201	-0.348			
117	-0.402	-0.139	141	.442	-0.209	165	.281	-0.348			
118	-0.321	-0.139	142	.522	-0.209	166	.361	-0.348			
119	-0.241	-0.139	143	-0.482	-0.278	167	.442	-0.348			
120	-0.161	-0.139	144	-0.402	-0.278	168	-0.321	-0.417			

Based on MIL-STD-1560 and other specs, contact fac

© 2022 Glenair, Inc • 1211 Air Way, Glendale, CA 91201 • 818-247-6000 • www.glenair.com • U.S. CAGE code 06324 • SuperNIne™ Catalog
Dimensions in Inches (millimeters) are subject to change without notice.

SuperNine®

MIL-DTL-38999 Series III Type

Combo PCB footprints

Mating face of pin insert shown (socket will be opposite)

15-15

1x #16
14X #20

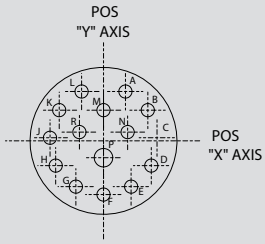

I.D. NO.	LOCATION X	LOCATION Y	GAGE
A	0.100	0.225	NO. 20
B	0.202	0.140	NO. 20
C	0.244	0.014	NO. 20
D	0.218	-0.113	NO. 20
E	0.126	-0.209	NO. 20
F	0.000	-0.245	NO. 20
G	-0.126	-0.209	NO. 20
H	-0.218	-0.113	NO. 20
J	-0.244	0.014	NO. 20
K	-0.202	0.140	NO. 20
L	-0.100	0.225	NO. 20
M	0.000	0.140	NO. 20
N	0.110	0.040	NO. 20
P	0.000	-0.077	NO. 16
R	-0.110	0.040	NO. 20

15-97

4X #16
8X #20

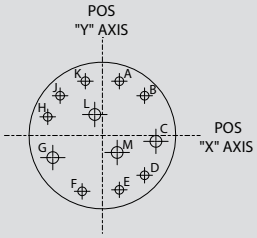

I.D. NO.	LOCATION X	LOCATION Y	GAGE
A	0.065	0.234	NO. 16
B	0.178	0.178	NO. 16
C	0.230	-0.023	NO. 20
D	0.178	-0.178	NO. 16
E	0.065	-0.234	NO. 16
F	-0.089	-0.235	NO. 16
G	-0.207	-0.095	NO. 20
H	-0.234	0.065	NO. 16
J	-0.178	0.178	NO. 16
K	-0.065	0.234	NO. 16
L	-0.047	0.081	NO. 20
M	0.047	-0.081	NO. 20

17-99

2X #16
37X #20

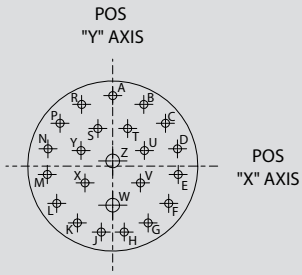

I.D. NO.	LOCATION X	LOCATION Y	GAGE	I.D. NO. X	LOCATION X	LOCATION Y	GAGE
A	0.000	0.321	NO. 20	N	-0.305	0.099	NO. 20
B	0.131	0.293	NO. 20	P	-0.239	0.214	NO. 20
C	0.239	0.214	NO. 20	R	-0.131	0.293	NO. 20
D	0.305	0.099	NO. 20	S	-0.070	0.177	NO. 20
E	0.319	-0.034	NO. 20	T	0.070	0.177	NO. 20
F	0.278	-0.161	NO. 20	U	0.175	0.094	NO. 20
G	0.189	-0.260	NO. 20	V	0.150	-0.075	NO. 20
H	0.067	-0.314	NO. 20	W	0.000	-0.161	NO. 16
J	-0.067	-0.314	NO. 20	X	-0.150	-0.075	NO. 20
K	-0.189	-0.260	NO. 20	Y	-0.175	0.094	NO. 20
L	-0.278	-0.161	NO. 20	Z	0.000	0.025	NO. 16
M	-0.319	-0.034	NO. 20				

Based on MIL-STD-1560 and other specs, contact factory for more details

© 2022 Glenair, Inc • 1211 Air Way, Glendale, CA 91201 • 818-247-6000 • www.glenair.com • U.S. CAGE code 06324 • SuperNine™ Catalog
Dimensions in Inches (millimeters) are subject to change without notice.

SuperNine®

MIL-DTL-38999 Series III Type

Combo PCB footprints

Mating face of pin insert shown (socket will be opposite)

19-28

2X #16
26X #20

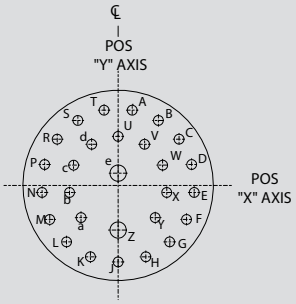

I.D. NO.	LOCATION X	LOCATION Y	GAGE	I.D. NO.	LOCATION X	LOCATION Y	GAGE
A	0.066	0.353	NO. 20	R	-0.286	0.217	NO. 20
B	0.189	0.305	NO. 20	S	-0.189	0.305	NO. 20
C	0.286	0.217	NO. 20	T	-0.066	0.353	NO. 20
D	0.345	0.098	NO. 20	U	0	0.230	NO. 20
E	0.357	-0.033	NO. 20	V	0.124	0.193	NO. 20
F	0.321	-0.160	NO. 20	W	0.209	0.095	NO. 20
G	0.242	-0.265	NO. 20	X	0.228	-0.033	NO. 20
H	0.130	-0.335	NO. 20	Y	0.174	-0.151	NO. 20
J	0	-0.359	NO. 20	Z	0	-0.191	NO. 16
K	-0.130	-0.335	NO. 20	a	-0.174	-0.151	NO. 20
L	-0.242	-0.265	NO. 20	b	-0.228	-0.033	NO. 20
M	-0.321	-0.160	NO. 20	c	-0.209	0.095	NO. 20
N	-0.357	-0.033	NO. 20	d	-0.124	0.193	NO. 20
P	-0.345	0.098	NO. 20	e	0	0.062	NO. 16

19-30

1X #16
29X #20

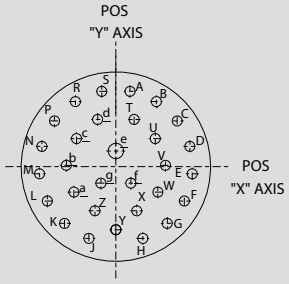

I.D. NO.	LOCATION X	LOCATION Y	GAGE	I.D. NO.	LOCATION X	LOCATION Y	GAGE
A	0.065	0.346	NO. 20	S	-0.065	0.346	NO. 20
B	0.186	0.299	NO. 20	T	0.084	0.217	NO. 20
C	0.282	0.210	NO. 20	U	0.181	0.129	NO. 20
D	0.340	0.093	NO. 20	V	0.228	0.008	NO. 20
E	0.351	-0.033	NO. 20	W	0.193	-0.117	NO. 20
F	0.315	-0.158	NO. 20	X	0.096	-0.203	NO. 20
G	0.236	-0.261	NO. 20	Y	0.000	-0.290	NO. 20
H	0.124	-0.330	NO. 20	Z	-0.096	-0.203	NO. 20
J	-0.124	-0.330	NO. 20	a	-0.193	-0.117	NO. 20
K	-0.236	-0.261	NO. 20	b	-0.228	0.008	NO. 20
L	-0.315	-0.158	NO. 20	c	-0.181	0.129	NO. 20
M	-0.351	-0.033	NO. 20	d	-0.084	0.217	NO. 20
N	-0.340	0.093	NO. 20	e	0.000	0.072	NO. 16
P	-0.282	0.210	NO. 20	f	0.069	-0.076	NO. 20
R	-0.186	0.299	NO. 20	g	-0.069	-0.076	NO. 20

Based on MIL-STD-1560 and other specs, contact factory for more details

© 2022 Glenair, Inc • 1211 Air Way, Glendale, CA 91201 • 818-247-6000 • www.glenair.com • U.S. CAGE code 06324 • SuperNIne™ Catalog
Dimensions in Inches (millimeters) are subject to change without notice.

SuperNine®

MIL-DTL-38999 Series III Type

Combo PCB footprints

Mating face of pin insert shown (socket will be opposite)

21-29

4X #12
4X #16
19X #20

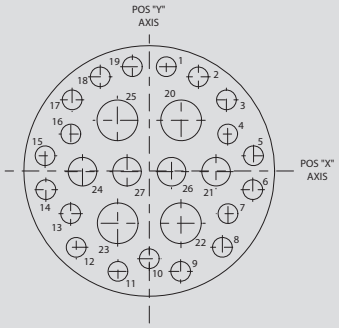

I.D. NO.	LOCATION X	LOCATION Y	GAGE	I.D. NO.	LOCATION X	LOCATION Y	GAGE
1	+.067	+.412	NO. 20	15	-0.412	+.060	NO. 20
2	+.194	+.372	NO. 20	16	-0.310	+.146	NO. 20
3	+.305	+.281	NO. 20	17	-0.305	+.281	NO. 20
4	+.310	+.146	NO. 20	18	-0.194	+.372	NO. 20
5	+.412	+.060	NO. 20	19	-0.067	+.412	NO. 20
6	+.409	-0.074	NO. 20	20	+.126	+.200	NO. 12
7	+.311	-0.169	NO. 20	21	+.264	-0.003	NO. 16
8	+.289	-0.302	NO. 20	22	+.125	-0.207	NO. 12
9	+.124	-0.397	NO. 20	23	-0.125	-0.207	NO. 12
10	0.000	-0.347	NO. 20	24	-0.264	-0.003	NO. 16
11	-124	-0.397	NO. 20	25	-0.126	+.200	NO. 12
12	-0.289	-0.302	NO. 20	26	+.088	-0.003	NO. 16
13	-0.311	-0.169	NO. 20	27	-0.088	-0.003	NO. 16
14	-0.409	-0.074	NO. 20				

21-39

2X #16
37X #20

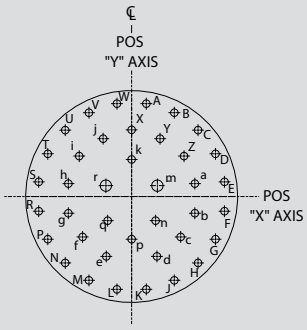

I.D. NO.	LOCATION X	LOCATION Y	GAGE	I.D. NO.	LOCATION X	LOCATION Y	GAGE
A	0.065	0.411	NO. 20	a	0.280	0.057	NO. 20
B	0.189	0.371	NO. 20	b	0.280	-0.074	NO. 20
C	0.294	0.294	NO. 20	c	0.217	-0.189	NO. 20
D	0.371	0.189	NO. 20	d	0.112	-0.265	NO. 20
E	0.411	0.065	NO. 20	e	-0.112	-0.265	NO. 20
F	0.411	-0.065	NO. 20	f	-0.217	-0.189	NO. 20
G	0.371	-0.189	NO. 20	g	-0.280	-0.074	NO. 20
H	0.294	-0.294	NO. 20	h	-0.280	0.057	NO. 20
J	0.189	-0.371	NO. 20	i	-0.232	0.179	NO. 20
K	0.065	-0.411	NO. 20	j	-0.126	0.256	NO. 20
L	-0.065	-0.411	NO. 20	k	0	0.164	NO. 20
M	-0.189	-0.371	NO. 20	m	0.114	0.048	NO. 16
N	-0.294	-0.294	NO. 20	n	0.106	-0.107	NO. 20
P	-0.371	-0.189	NO. 20	p	0	-0.189	NO. 20
R	-0.411	-0.065	NO. 20	q	-0.106	-0.107	NO. 20
S	-0.411	0.065	NO. 20	r	-0.114	0.048	NO. 16
T	-0.371	0.189	NO. 20				
U	-0.294	0.294	NO. 20				
V	-0.189	0.371	NO. 20				
W	-0.065	0.411	NO. 20				
X	0	0.295	NO. 20				
Y	0.126	0.256	NO. 20				
Z	0.232	0.179	NO. 20				

Based on MIL-STD-1560 and other specs, contact factory for more details

© 2022 Glenair, Inc • 1211 Air Way, Glendale, CA 91201 • 818-247-6000 • www.glenair.com • U.S. CAGE code 06324 • SuperNine™ Catalog
Dimensions in Inches (millimeters) are subject to change without notice.

SuperNine®

MIL-DTL-38999 Series III Type

Combo PCB footprints

Mating face of pin insert shown (socket will be opposite)

25-4

8X #16
48X #20

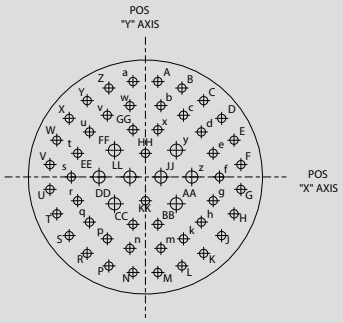

I.D. NO.	LOCATION X	LOCATION Y	GAGE	I.D. NO.	LOCATION X	LOCATION Y	GAGE
A	0.069	0.531	NO. 20	f	0.412	0.000	NO. 20
B	0.203	0.495	NO. 20	g	0.377	-0.132	NO. 20
C	0.324	0.425	NO. 20	h	0.311	-0.251	NO. 20
D	0.424	0.326	NO. 20	k	0.212	-0.344	NO. 20
E	0.493	0.205	NO. 20	m	0.086	-0.397	NO. 20
F	0.531	0.069	NO. 20	n	-0.086	-0.397	NO. 20
G	0.531	-0.069	NO. 20	p	-0.212	-0.344	NO. 20
H	0.493	-0.205	NO. 20	q	-0.311	-0.251	NO. 20
J	0.424	-0.326	NO. 20	r	-0.377	-0.132	NO. 20
K	0.324	-0.425	NO. 20	s	-0.412	0.000	NO. 20
L	0.203	-0.495	NO. 20	t	-0.377	0.132	NO. 20
M	0.069	-0.531	NO. 20	u	-0.311	0.251	NO. 20
N	-0.069	-0.531	NO. 20	v	-0.212	0.344	NO. 20
P	-0.203	-0.495	NO. 20	w	-0.086	0.397	NO. 20
R	-0.324	-0.425	NO. 20	x	0.069	0.263	NO. 20
S	-0.424	-0.326	NO. 20	y	0.172	0.149	NO. 20
T	-0.493	-0.205	NO. 20	z	0.258	0.000	NO. 20
U	-0.531	-0.069	NO. 20	AA	0.172	-0.149	NO. 16
V	-0.531	0.069	NO. 20	BB	0.069	-0.263	NO. 16
W	-0.493	0.205	NO. 20	CC	-0.069	-0.263	NO. 16
X	-0.424	0.326	NO. 20	DD	-0.172	-0.149	NO. 16
Y	-0.324	0.425	NO. 20	EE	-0.258	0.000	NO. 16
Z	-0.203	0.495	NO. 20	FF	-0.172	0.149	NO. 16
a	-0.069	0.531	NO. 20	GG	-0.069	0.263	NO. 16
b	0.086	0.397	NO. 20	HH	0.000	0.132	NO. 16
c	0.212	0.344	NO. 20	JJ	0.086	0.000	NO. 16
d	0.311	0.251	NO. 20	KK	0.000	-0.132	NO. 16
e	0.377	0.132	NO. 20	LL	-0.086	0.000	NO. 16

25-11

9X #10
2X #20

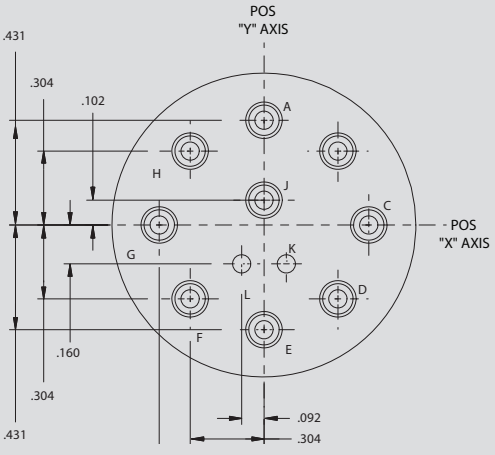

Based on MIL-STD-1560 and other specs, contact factory for more details

© 2022 Glenair, Inc • 1211 Air Way, Glendale, CA 91201 • 818-247-6000 • www.glenair.com • U.S. CAGE code 06324 • SuperNIne™ Catalog
Dimensions in Inches (millimeters) are subject to change without notice.

SuperNine®

MIL-DTL-38999 Series III Type

Combo PCB footprints

Mating face of pin insert shown (socket will be opposite)

25-24

12X #16
12X #12

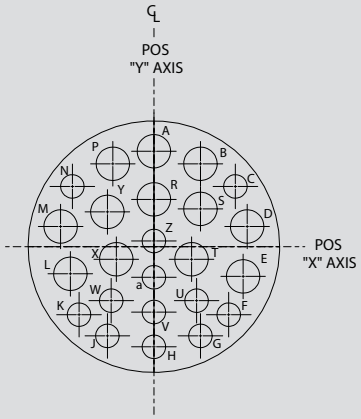

I.D. NO.	LOCATION X	LOCATION Y	GAGE	I.D. NO.	LOCATION X	LOCATION Y	GAGE
A	+.000	+.472	NO. 12	N	-.403	+.298	NO. 16
B	+.230	+.410	NO. 12	P	-.230	+.410	NO. 12
C	+.403	+.298	NO. 16	R	+.000	+.234	NO. 12
D	+.461	+.100	NO. 12	S	+.230	+.172	NO. 12
E	+.413	-.134	NO. 12	T	+.186	-.062	NO. 12
F	+.370	-.336	NO. 16	U	+.211	-.267	NO. 16
G	+.230	-.441	NO. 16	V	+.000	-.323	NO. 16
H	+.000	-.495	NO. 16	W	-.211	-.267	NO. 16
J	-.230	-.441	NO. 16	X	-.186	-.062	NO. 12
K	-.370	-.336	NO. 16	Y	-.230	+.172	NO. 12
L	-.413	-.134	NO. 16	Z	+.000	+.028	NO. 16
M	-.461	+.100	NO. 12	a	+.000	-.151	NO. 16

25-43

20X #16
23X #20

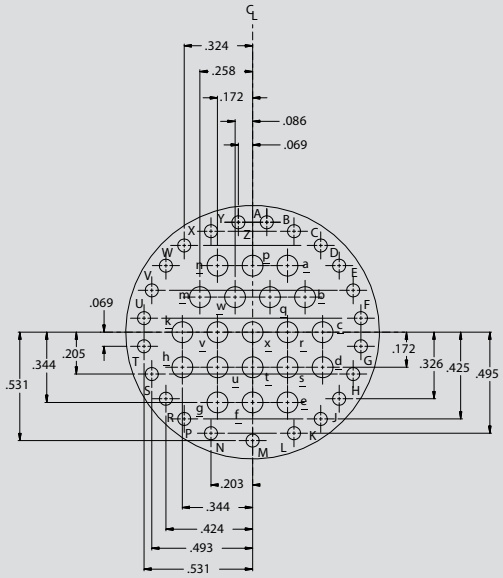

Based on MIL-STD-1560 and other specs, contact factory for more details

© 2022 Glenair, Inc • 1211 Air Way, Glendale, CA 91201 • 818-247-6000 • www.glenair.com • U.S. CAGE code 06324 • SuperNine™ Catalog
Dimensions in Inches (millimeters) are subject to change without notice.

SuperNine®

MIL-DTL-38999 Series III Type

High-speed PCB footprints

Mating face of pin insert shown (socket will be opposite)

9G5

1 #8

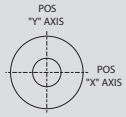

I.D. NO.	LOCATION		GAGE
	X	Y	
A	.000	.000	NO. 8

11-1

1 #8

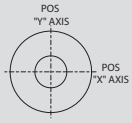

I.D. No.	Location		Gage
	X	Y	
A	.000	.000	NO. 8

13-4

1 #8
14 #23

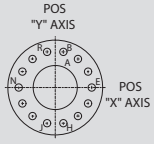

I.D. NO.	LOCATION		GAGE
	X	Y	
A	.000	.000	NO. 8
B	.049	.215	23 GA
C	.137	.172	23 GA
D	.198	.096	23 GA
E	.220	.000	23 GA
F	.198	-.096	23 GA
G	.137	-.172	23 GA
H	.049	-.215	23 GA
J	-.049	-.215	23 GA
K	-.137	-.172	23 GA
M	-.198	-.096	23 GA
N	-.220	.000	23 GA
P	-.198	.096	23 GA
Q	-.137	.172	23 GA
R	-.049	.215	23 GA

17-2

1 #8
38 #22

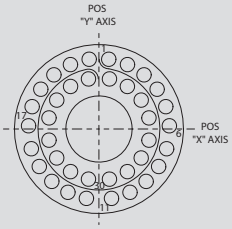

I.D. NO.	LOCATION		GAUGE	I.D. NO.	LOCATION		GAGE
	X	Y			X	Y	
1	.046	.325	22D GA	21	-.133	.299	22D GA
2	.133	.299	22D GA	22	-.046	.325	22D GA
3	.211	.251	22D GA	23	.046	.231	22D GA
4	.272	.183	22D GA	24	.129	.197	22D GA
5	.312	.101	22D GA	25	.194	.133	22D GA
6	.328	.011	22D GA	26	.230	.050	22D GA
7	.318	-.079	22D GA	27	.232	-.040	22D GA
8	.284	-.164	22D GA	28	.200	-.125	22D GA
9	.228	-.236	22D GA	29	.137	-.191	22D GA
10	.154	-.289	22D GA	30	.055	-.229	22D GA
11	.068	-.321	22D GA	31	-.055	-.229	22D GA
12	-.068	-.321	22D GA	32	-.137	-.191	22D GA
13	.154	-.289	22D GA	33	-.200	-.125	22D GA
14	-.228	-.236	22D GA	34	-.232	-.040	22D GA
15	-.284	-.164	22D GA	35	-.230	.050	22D GA
16	-.318	-.079	22D GA	36	-.194	.133	22D GA
17	-.328	.011	22D GA	37	-.129	.197	22D GA
18	-.312	.101	22D GA	38	-.046	.231	22D GA
19	-.272	.183	22D GA	39	.000	.000	NO. 8
20	-.211	.251	22D GA				

Based on MIL-STD-1560 and other specs, contact factory for more details

© 2022 Glenair, Inc • 1211 Air Way, Glendale, CA 91201 • 818-247-6000 • www.glenair.com • U.S. CAGE code 06324 • SuperNIne™ Catalog
Dimensions in Inches (millimeters) are subject to change without notice.

SuperNine®

MIL-DTL-38999 Series III Type

High-speed PCB footprints

Mating face of pin insert shown (socket will be opposite)

17-22

2 #8
2 #12

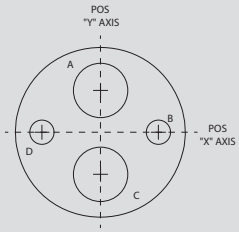

I.D. NO.	LOCATION		GAGE
	X	Y	
A	0	.180	NO. 8
B	.249	0	12 GA
C	0	-.180	NO. 8
D	.249	0	12 GA

17-60

2 #8
8 #22

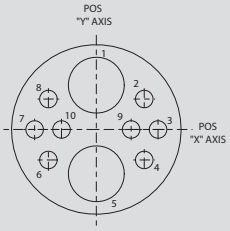

I.D. NO.	LOCATION		GAGE
	X	Y	
1	.000	.180	NO. 8
2	.240	.145	22D GA
3	.297	.000	22D GA
4	.240	-.145	22D GA
5	.000	-.180	NO. 8
6	-.240	-.145	22D GA
7	-.297	.000	22D GA
8	-.240	.145	22D GA
9	.177	.000	22D GA
10	-.177	.000	22D GA

17-75

2 #8

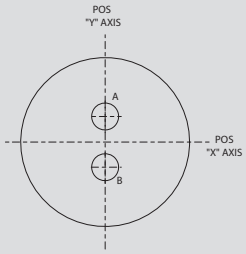

I.D. NO.	LOCATION		GAGE
	X	Y	
A	.000	.187	NO. 8
B	.000	-.187	NO. 8

19-4

4 #8

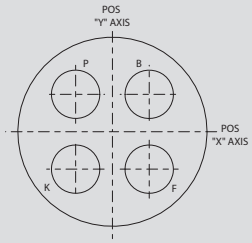

I.D. NO.	LOCATION		GAGE
	X	Y	
B	.180	.180	NO. 8
F	.180	-.180	NO. 8
K	-.180	-.180	NO. 8
P	-.180	.180	NO. 8

Based on MIL-STD-1560 and other specs, contact factory for more details

© 2022 Glenair, Inc • 1211 Air Way, Glendale, CA 91201 • 818-247-6000 • www.glenair.com • U.S. CAGE code 06324 • SuperNine™ Catalog
Dimensions in Inches (millimeters) are subject to change without notice.

Mating face of pin insert shown (socket will be opposite)

19-17

2X #8
26X #20

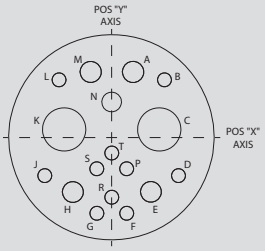

I.D. NO.	LOCATION X	LOCATION Y	GAGE
A	0.099	0.301	NO. 20
B	0.244	0.265	NO. 20
C	0.220	0.035	NO. 8
D	0.310	-0.178	NO. 20
E	0.181	-0.254	NO. 20
F	0.069	-0.353	NO. 20
G	-0.069	-0.353	NO. 20
H	-0.181	-0.254	NO. 20
J	-0.310	-0.178	NO. 20
K	-0.220	0.035	NO. 8
L	-0.244	0.265	NO. 20
M	-0.099	0.301	NO. 20
N	0.000	0.162	NO. 20
P	0.069	-0.147	NO. 20
R	0.000	-0.278	NO. 20
S	-0.069	-0.147	NO. 20
T	0.000	-0.071	NO. 20

19A-17

1X #8
20X #16

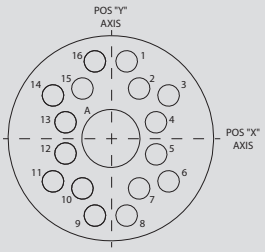

I.D. NO.	LOCATION X	LOCATION Y	GAGE
1	+.072	+0.328	NO. 20
2	+.138	+0.208	NO. 20
3	+.276	+0.195	NO. 20
4	+.239	+0.067	NO. 20
5	+.239	-0.067	NO. 20
6	+.276	-0.195	NO. 20
7	+.138	-0.208	NO. 20
8	+.072	-0.328	NO. 20
9	-0.072	-0.328	NO. 20
10	-0.138	-0.208	NO. 20
11	-0.276	-0.195	NO. 20
12	-0.239	-0.067	NO. 20
13	-0.239	+0.067	NO. 20
14	-0.276	+0.195	NO. 20
15	-0.138	+0.208	NO. 20
16	-0.072	+0.328	NO. 20
A	+.000	+0.000	NO. 8

Based on MIL-STD-1560 and other specs, contact factory for more details

© 2022 Glenair, Inc • 1211 Air Way, Glendale, CA 91201 • 818-247-6000 • www.glenair.com • U.S. CAGE code 06324 • SuperNIne™ Catalog
Dimensions in Inches (millimeters) are subject to change without notice.

SuperNine®

MIL-DTL-38999 Series III Type

High-speed PCB footprints

Mating face of pin insert shown (socket will be opposite)

19-18

4x #8
14X #22

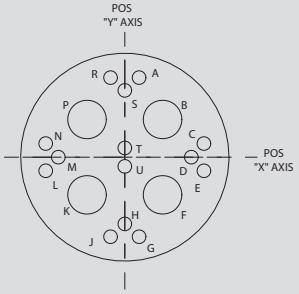

I.D. NO.	LOCATION		GAGE	I.D. NO.	LOCATION		GAGE
	X	Y			X	Y	
A	+.068	+.380	NO. 22	L	-0.377	-0.065	NO. 22
B	+.180	+.180	NO. 8	M	-0.317	+.000	NO. 22
C	+.377	+.065	NO. 22	N	-0.377	+.065	NO. 22
D	+.317	+.000	NO. 22	P	-0.180	+.180	NO. 8
E	+.377	-0.065	NO. 22	R	-0.068	+.380	NO. 22
F	+.180	-0.180	NO. 8	S	+.000	+.319	NO. 22
G	+.068	-.380	NO. 22	T	+.000	+.044	NO. 22
K	-0.180	-0.180	NO. 8	U	+.000	-0.044	NO. 22

21-75

4 #8

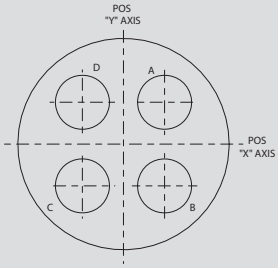

I.D. NO.	LOCATION		GAGE
	X	Y	
B	.180	.180	NO. 8
F	.180	-.180	NO. 8
K	-.180	-.180	NO. 8
P	-.180	.180	NO. 8

23-5

5 #8

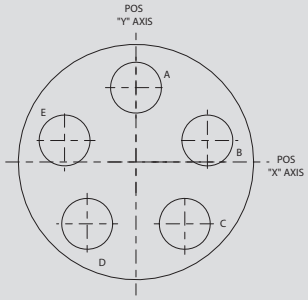

I.D. NO.	LOCATION		GAGE
	X	Y	
A	.000	.364	NO. 8
B	.347	.113	NO. 8
C	.214	-.295	NO. 8
D	-.214	-.295	NO. 8
E	-.347	.113	NO. 8

Based on MIL-STD-1560 and other specs, contact factory for more details

© 2022 Glenair, Inc • 1211 Air Way, Glendale, CA 91201 • 818-247-6000 • www.glenair.com • U.S. CAGE code 06324 • SuperNine™ Catalog
Dimensions in Inches (millimeters) are subject to change without notice.

SuperNine®

MIL-DTL-38999 Series III Type

High-speed PCB footprints

Mating face of pin insert shown (socket will be opposite)

23-6

6 #8

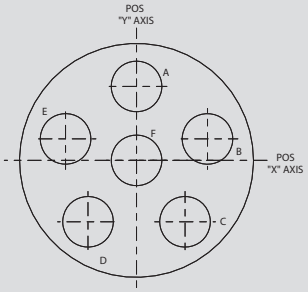

I.D. NO.	LOCATION		GAGE
	X	Y	
A	.000	.364	NO. 8
B	.347	.113	NO. 8
C	.214	-.295	NO. 8
D	-.214	-.295	NO. 8
E	-.347	.113	NO. 8
F	.000	.000	NO. 8

Based on MIL-STD-1560 and other specs, contact factory for more details

© 2022 Glenair, Inc • 1211 Air Way, Glendale, CA 91201 • 818-247-6000 • www.glenair.com • U.S. CAGE code 06324 • SuperNIne™ Catalog
Dimensions in Inches (millimeters) are subject to change without notice.

SuperNine®

MIL-DTL-38999 Series III Type

High-speed PCB footprints

Mating face of pin insert shown (socket will be opposite)

25-7

2 #8
97 #22D

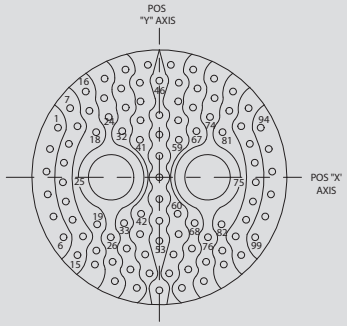

I.D. NO.	LOCATION		GAUGE	I.D. NO.	LOCATION		GAGE
	X	Y			X	Y	
1	-.494	.242	NO. 22	51	.000	-.106	NO. 22
2	-.533	.138	NO. 22	52	.000	-.212	NO. 22
3	-.550	.028	NO. 22	53	.000	-.310	NO. 22
4	-.544	-.083	NO. 22	54	.000	-.551	NO. 22
5	-.516	-.191	NO. 22	55	.056	.548	NO. 22
6	-.467	-.292	NO. 22	56	.095	.461	NO. 22
7	-.435	.337	NO. 22	57	.068	.370	NO. 22
8	-.399	.249	NO. 22	58	.092	.278	NO. 22
9	-.441	.163	NO. 22	59	.095	.183	NO. 22
10	-.465	.071	NO. 22	60	.089	-.178	NO. 22
11	-.470	-.024	NO. 22	61	.094	-.277	NO. 22
12	-.456	-.118	NO. 22	62	.069	-.376	NO. 22
13	-.423	-.207	NO. 22	63	.048	-.468	NO. 22
14	-.372	-.288	NO. 22	64	.165	.525	NO. 22
15	-.399	-.379	NO. 22	65	.186	.433	NO. 22
16	-.359	.418	NO. 22	66	.164	.340	NO. 22
17	-.341	.324	NO. 22	67	.181	.225	NO. 22
18	-.308	.222	NO. 22	68	.172	-.223	NO. 22
19	-.303	-.223	NO. 22	69	.159	-.347	NO. 22
20	-.307	-.357	NO. 22	70	.141	-.449	NO. 22
21	-.314	-.452	NO. 22	71	.111	-.539	NO. 22
22	-.267	.481	NO. 22	72	.267	.481	NO. 22
23	-.269	.386	NO. 22	73	.269	.386	NO. 22
24	-.247	.294	NO. 22	74	.247	.294	NO. 22
25	-.238	.000	NO. 8	75	.238	.000	NO. 8
26	-.237	-.292	NO. 22	76	.237	-.292	NO. 22
27	-.228	-.412	NO. 22	77	.228	-.412	NO. 22
28	-.217	-.506	NO. 22	78	.217	-.506	NO. 22
29	-.165	.525	NO. 22	79	.359	.418	NO. 22
30	-.186	.433	NO. 22	80	.341	.324	NO. 22
31	-.164	.340	NO. 22	81	.308	.222	NO. 22
32	-.181	.225	NO. 22	82	.303	-.223	NO. 22
33	-.172	-.223	NO. 22	83	.307	-.357	NO. 22
34	-.159	-.347	NO. 22	84	.314	-.452	NO. 22
35	-.141	-.449	NO. 22	85	.435	.337	NO. 22
36	-.111	-.539	NO. 22	86	.399	.249	NO. 22
37	-.056	.548	NO. 22	87	.441	.163	NO. 22
38	-.095	.461	NO. 22	88	.465	.071	NO. 22
39	-.068	.370	NO. 22	89	.470	-.024	NO. 22
40	-.092	.278	NO. 22	90	.456	-.118	NO. 22
41	-.095	.183	NO. 22	91	.423	-.207	NO. 22
42	-.089	-.178	NO. 22	92	.372	-.288	NO. 22
43	-.094	-.277	NO. 22	93	.399	-.379	NO. 22
44	-.069	-.376	NO. 22	94	.494	.242	NO. 22
45	-.048	-.468	NO. 22	95	.533	.138	NO. 22
46	.000	.471	NO. 22	96	.550	.028	NO. 22
47	.000	.303	NO. 22	97	.544	-.083	NO. 22
48	.000	.208	NO. 22	98	.516	-.191	NO. 22
49	.000	.104	NO. 22	99	.467	-.292	NO. 22
50	.000	.000	NO. 22				

Based on MIL-STD-1560 and other specs, contact factory for more details

© 2022 Glenair, Inc • 1211 Air Way, Glendale, CA 91201 • 818-247-6000 • www.glenair.com • U.S. CAGE code 06324 • SuperNine™ Catalog
Dimensions in Inches (millimeters) are subject to change without notice.

SuperNine®

MIL-DTL-38999 Series III Type

High-speed PCB footprints

Mating face of pin insert shown (socket will be opposite)

25-8

7 #8

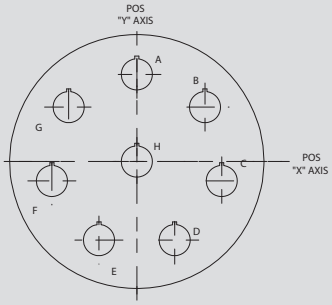

I.D. NO.	LOCATION		GAGE
	X	Y	
A	.000 (.00)	.426 (1.82)	NO. 8
B	.333 (8.46)	.266 (6.76)	NO. 8
C	.415 (10.54)	-.095 (2.41)	NO. 8
D	.185 (4.70)	-.384 (9.75)	NO. 8
E	-.185 (4.70)	-.384 (9.75)	NO. 8
F	-.415 (-10.54)	-.095 (2.41)	NO. 8
G	-.333 (8.46)	.266 (6.76)	NO. 8
H	.000 (.00)	.000 (.00)	NO. 8

25-17

6 #8
36 #22D

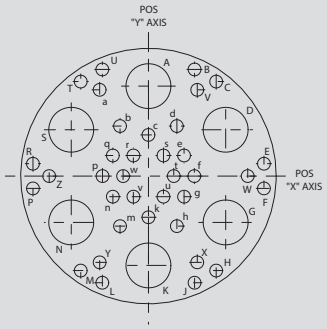

I.D. NO.	LOCATION		GAUGE	I.D. NO.	LOCATION		GAGE
	X	Y			X	Y	
A	.000	.437	NO. 8	a	-.237	.419	NO. 22
B	.224	.518	NO. 22	b	-.138	.243	NO. 22
C	.329	.459	NO. 22	c	.000	.200	NO. 22
D	.375	.225	NO. 8	d	.138	.243	NO. 22
E	.561	.060	NO. 22	e	.173	.100	NO. 22
F	.561	-.060	NO. 22	f	.223	.000	NO. 22
G	.375	-.225	NO. 8	g	.173	-.100	NO. 22
H	.329	-.459	22 GA	h	.138	-.243	NO. 22
J	.224	-.518	NO. 22	k	.000	-.200	NO. 22
K	.000	-.437	NO. 8	m	-.138	-.243	NO. 22
L	-.224	-.518	NO. 22	n	-.173	-.100	NO. 22
M	-.329	-.459	NO. 22	p	-.223	.000	NO. 22
N	-.375	-.225	NO. 8	q	-.173	.100	NO. 22
P	-.561	-.060	NO. 22	r	-.073	.100	NO. 22
R	-.561	.060	NO. 22	s	.073	.100	NO. 22
S	-.375	.225	NO. 8	t	.123	.000	NO. 22
T	-.329	.459	NO. 22	u	.073	-.100	NO. 22
U	-.224	.518	NO. 22	v	-.073	-.100	NO. 22
V	.237	.419	NO. 22	w	-.123	.000	NO. 22
W	.482	.000	NO. 22				
X	.237	-.419	NO. 22				
Y	-.237	-.419	NO. 22				
Z	-.482	.000	NO. 22				

Based on MIL-STD-1560 and other specs, contact factory for more details

© 2022 Glenair, Inc • 1211 Air Way, Glendale, CA 91201 • 818-247-6000 • www.glenair.com • U.S. CAGE code 06324 • SuperNIne™ Catalog
Dimensions in Inches (millimeters) are subject to change without notice.

SuperNine®

MIL-DTL-38999 Series III Type

High-speed PCB footprints

Mating face of pin insert shown (socket will be opposite)

25-20

3 #8
4 #12
3 #16
10 #20

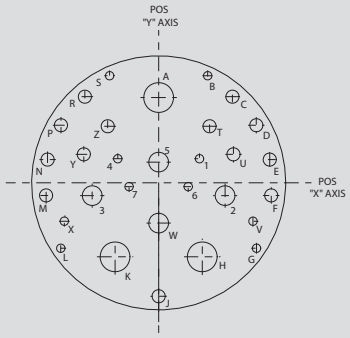

I.D. NO.	LOCATION		GAUGE	I.D. NO.	LOCATION		GAGE
	X	Y			X	Y	
A	.000	.407	NO. 8	S	.234	.511	NO. 20
B	.234	.511	NO. 20	T	.243	.270	NO. 16
C	.352	.411	NO. 16	U	.357	.136	NO. 16
D	.466	.275	NO. 16	V	.450	-.183	NO. 20
E	.530	.111	NO. 16	W	.000	-.131	NO. 12
F	.537	-.060	NO. 16	X	.450	-.183	NO. 20
G	.467	-.312	NO. 20	Y	.357	.136	NO. 16
H	.208	-.353	NO. 8	Z	.243	.270	NO. 16
J	.000	-.541	NO. 16	1	.195	.115	NO. 20
K	-.208	-.353	NO. 8	2	.317	-.061	NO. 12
L	-.467	-.312	NO. 20	3	-.317	-.061	NO. 12
M	-.537	-.060	NO. 16	4	-.195	.115	NO. 20
N	.530	.111	NO. 16	5	.000	.099	NO. 12
P	.466	.275	NO. 16	6	.141	-.018	NO. 20
R	.352	.411	NO. 16	7	-.141	-.018	NO. 20

25-26

4 #8
5 #12
16 #20

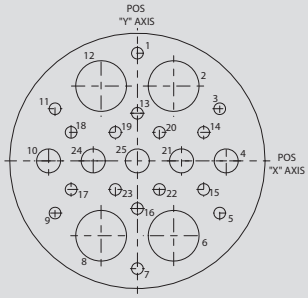

I.D. NO.	LOCATION		GAGE
	X	Y	
1	.000	.548	NO. 20
2	.205	.382	NO. 8
3	.460	.265	NO. 20
4	.495	.000	NO. 12
5	.460	-.265	NO. 20
6	.205	-.382	NO. 8
7	.000	-.548	NO. 20
8	-.205	-.382	NO. 8
9	-.460	-.265	NO. 20
10	-.495	.000	NO. 12
11	-.460	.265	NO. 20
12	-.205	.382	NO. 8
13	.000	.218	NO. 20
14	.375	.147	NO. 20
15	.375	-.147	NO. 20
16	.000	-.218	NO. 20
17	.375	-.147	NO. 20
18	.375	.147	NO. 20
19	.127	.140	NO. 20
20	.127	.140	NO. 20
21	.255	.000	NO. 12
22	.127	-.140	NO. 20
23	.127	-.140	NO. 20
24	.255	.000	NO. 12
25	.000	.000	NO. 12

Based on MIL-STD-1560 and other specs, contact factory for more details

© 2022 Glenair, Inc • 1211 Air Way, Glendale, CA 91201 • 818-247-6000 • www.glenair.com • U.S. CAGE code 06324 • SuperNine™ Catalog
Dimensions in Inches (millimeters) are subject to change without notice.

SuperNine®

MIL-DTL-38999 Series III Type

High-speed PCB footprints

Mating face of pin insert shown (socket will be opposite)

25-41

3 #8
2 #12
11 #16
3 #20
22 #22D

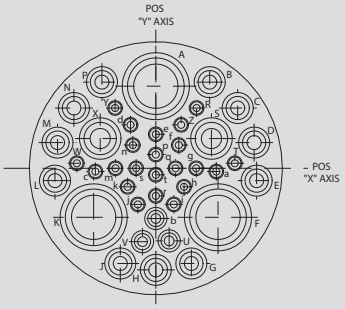

I.D. NO.	LOCATION		GAUGE	I.D. NO.	LOCATION		GAGE
	X	Y			X	Y	
A	.000	.425	NO. 8	a	.313	-.017	NO. 22D
B	.279	.446	NO. 16	b	.000	-.260	NO. 20
C	.424	.312	NO. 16	c	-.313	-.017	NO. 22D
D	.509	.133	NO. 16	d	-.131	.225	NO. 22D
E	.522	-.064	NO. 16	e	.000	.176	NO. 22D
F	.322	-.254	NO. 8	f	.119	.120	NO. 22D
G	.184	-.493	NO. 16	g	.209	.000	NO. 22D
H	.000	-.526	NO. 16	h	.146	-.096	NO. 22D
J	-.184	-.493	NO. 16	i	.093	-.187	NO. 22D
K	-.322	-.254	NO. 8	j	-.093	-.187	NO. 22D
L	-.522	-.064	NO. 16	k	-.146	-.096	NO. 22D
M	-.509	.133	NO. 16	m	-.209	.000	NO. 22D
N	-.424	.312	NO. 16	n	-.119	.120	NO. 22D
P	-.279	.446	NO. 16	p	.000	.071	NO. 22D
R	.211	.312	NO. 22D	q	.102	.000	NO. 22D
S	.288	.154	NO. 12	r	.000	-.143	NO. 22D
T	.409	.026	NO. 22D	s	-.102	.000	NO. 22D
U	.069	-.380	NO. 20	t	.000	-.034	NO. 22D
V	-.069	-.380	NO. 20				
W	-.409	.026	NO. 22D				
X	-.288	.154	NO. 12				
Y	-.211	.312	NO. 22D				
Z	.131	.225	NO. 22D				

25-90
&
25-46

2 #8
4 #16
40 #20

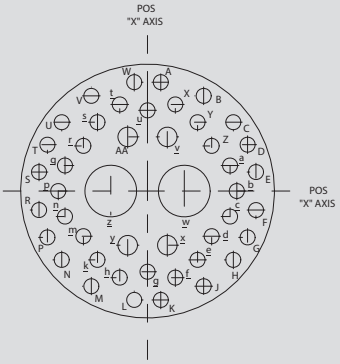

I.D. NO.	LOCATION		GAUGE	I.D. NO.	LOCATION		GAGE
	X	Y			X	Y	
A	.065	.533	NO. 20	a	.404	.125	NO. 20
B	.275	.466	NO. 20	b	.437	.000	NO. 20
C	.420	.337	NO. 20	c	.404	-.125	NO. 20
D	.490	.227	NO. 20	d	.314	-.221	NO. 20
E	.531	.093	NO. 20	e	.245	-.337	NO. 20
F	.531	-.093	NO. 20	f	.136	-.424	NO. 20
G	.490	-.227	NO. 20	g	.000	-.395	NO. 20
H	.420	-.337	NO. 20	h	-.136	-.424	NO. 20
J	.275	-.466	NO. 20	k	-.245	-.337	NO. 20
K	.065	-.533	NO. 20	m	-.314	-.221	NO. 20
L	-.065	-.533	NO. 20	n	-.404	-.125	NO. 20
M	-.275	-.466	NO. 20	p	-.437	.000	NO. 20
N	-.420	-.337	NO. 20	q	-.404	.125	NO. 20
P	-.490	-.227	NO. 20	r	-.314	.221	NO. 20
R	-.531	-.093	NO. 20	s	-.245	.337	NO. 20
S	-.531	.093	NO. 20	t	-.136	.424	NO. 20
T	-.490	.227	NO. 20	u	.000	.395	NO. 20
U	-.420	.337	NO. 20	v	.097	.265	NO. 16
V	-.275	.466	NO. 20	w	.180	.000	NO. 8
W	-.065	.533	NO. 20	x	.097	-.265	NO. 16
X	.136	.424	NO. 20	y	-.097	-.265	NO. 16
Y	.245	.337	NO. 20	z	-.180	.000	NO. 8
Z	.314	.221	NO. 20	AA	-.097	.265	NO. 16

Based on MIL-STD-1560 and other specs, contact factory for more details

© 2022 Glenair, Inc • 1211 Air Way, Glendale, CA 91201 • 818-247-6000 • www.glenair.com • U.S. CAGE code 06324 • SuperNIne™ Catalog
Dimensions in Inches (millimeters) are subject to change without notice.

ADVANCED PERFORMANCE

SuperNine®

Part number index

050-301 ..... J-30
10-13033-102 ..... B-56
10-13033-102 ..... B-65
10-13033-103 ..... B-56
10-13033-103 ..... B-65
180-091 (05) G-19
180-091 (08) G-20
180-091 (G6) G-18
180-091 (H7) G-21
180-091 (S7) G-22
180-091 (T7) G-23
181-001 ..... G-7
181-002 ..... G-6
181-009 ..... G-9
181-010 ..... G-8
181-035 ..... G-11
181-036 ..... G-10
181-048-16 ..... G-23
181-052 ..... G-12
181-053 ..... G-13
181-065 ..... G-14
181-066 ..... G-15
187-019 ..... G-16
187-029 ..... G-17
187-266 ..... G-17
2330-0003 ..... E-24
2330-0015 ..... E-48
2330-0455 ..... E-51
2330-0455 ..... E-6
233-103 ..... D-30
233-205 ..... B-8
233-206 ..... B-12
233-207 ..... B-32, 34
233-208 ..... B-36, 38
233-209 ..... B-40, 42
233-210 ..... B-44, 46
233-211 ..... B-48, 50
233-212 ..... B-57, 59
233-213 ..... B-55
233-214 ..... B-56
233-215 ..... B-18
233-216 ..... B-30
233-217 ..... C-36
233-218 ..... C-49
233-218 ..... D-10
233-219 ..... C-95
233-220 ..... C-101
233-221 ..... B-16
233-224 ..... C-30
233-225 ..... C-54
233-226 ..... C-45
233-227 ..... C-60
233-228 ..... C-1
233-230-00 ..... B-64
233-230-G6 ..... B-63
233-250 ..... D-41
233-251 ..... D-42
233-252 ..... D-44
233-253 ..... D-46
233-254 ..... D-48
233-255 ..... D-50
233-260 ..... C-45
233-260 ..... C-42
233-261 ..... D-35
233-262 ..... D-18
233-265 ..... D-14
233-266 ..... D-16
233-267 ..... D-22
233-268 ..... D-26
233-274 ..... B-24, 26
233-300 ..... E-10
233-301 ..... E-12
233-302 ..... E-14
233-303 ..... E-16
233-304 ..... E-18
233-305 ..... E-20
233-312 ..... E-9
233-330 ..... E-22
233-340 ..... E-34
233-342 ..... E-36
233-343 ..... E-38
233-344 ..... E-40
233-345 ..... E-42
233-360 ..... E-56
233-362 ..... E-59
233-363 ..... E-61
233-364 ..... E-63
233-365 ..... E-66
233-368 ..... E-68
233-370 ..... E-44
233-390 ..... E-46
233-392 ..... E-47
233PS215 ..... B-22
233PS215 ..... B-20
239-200 ..... H-40
239-202 ..... H-42
239-204 ..... H-43
239-205 ..... H-44
240-383B F-24
240-383D F-20
240-383E F-22
240-383J F-14
240-383P F-8
240-383Q F-10
240-383R F-16
240-383S F-18
240-383W F-12
244-001 ..... E-27
244-002 ..... E-28
244-003 ..... E-29
244-004 ..... E-30

INDEX

© 2022 Glenair, Inc • 1211 Air Way, Glendale, CA 91201 • 818-247-6000 • www.glenair.com • U.S. CAGE code 06324 • SuperNine™ Catalog
Dimensions in Inches (millimeters) are subject to change without notice.

ADVANCED PERFORMANCE

SuperNine®

Part number index

INDEX

253-014 ..... B-73
253-015 ..... B-73
253-016 ..... B-75
253-017 ..... B-75
253-018 ..... B-77
253-019 ..... B-79
253-025 ..... B-87
253-031 ..... B-81
253-032 ..... B-83
253-033 ..... B-85
253-044 ..... C-73
253-045 ..... C-77
253-047 ..... C-83
253-048 ..... C-83
253-393 ..... B-29
285049/18 ..... H-4
285049/19 ..... H-4
310-045 ..... H-8
320HM030 ..... H-15
320HN030 ..... H-15
320HS030 ..... H-15
377-119 ..... C-104
377HS121 ..... C-68
440-143 ..... H-9
440-144 ..... H-11
440HS232 ..... H-18
443HM042 ..... H-20
443HM042 ..... H-20
443HN042 ..... H-20
443HN042 ..... H-20
443HS042 ..... H-20
443HS042 ..... H-20
44HM233 ..... H-16
44HN233 ..... H-16
44HS233 ..... H-16
470-017 ..... H-13
600-157 ..... J-53
600-235 ..... J-40
600-236 ..... J-40
600-242 ..... J-40
600-243 ..... J-40
600-244 ..... J-40
600-280 ..... J-41
600H005 ..... J-51
601-005 ..... J-50
601-006 ..... J-50
601-040 ..... J-50
601-041 ..... J-50
601-049 ..... J-50
601-050 ..... J-50
620HS090 ..... J-18
660-023 ..... G-24
660-024 ..... G-24
660-049 ..... G-24
660-049 ..... H-38
660-050 ..... G-24
660-050 ..... H-38
660-121 ..... H-41
667-448 ..... H-34
667-449 ..... H-36
680-116 ..... J-47
687-749 ..... H-32
687-754 ..... J-6
770-003 ..... H-22
809-015 ..... C-19
809-015 ..... J-42
809-048 ..... J-43
809-072 ..... J-17
809-107 ..... J-44
809-125 ..... J-42
809-126 ..... J-42
809-127 ..... J-42
809-129 ..... C-19, J-43
809-129 ..... J-43
809-130 ..... J-43
809-131 ..... J-44
809-132 ..... J-44
809-136 ..... J-43
809-137 ..... J-43
809-138 ..... J-18
809-207 ..... J-44
809-240 ..... J-42
809-369 ..... J-42
809-370 ..... J-44
809-371 ..... J-44
809-372 ..... J-44
830-003 ..... J-30
830-005 ..... J-30
850-001 ..... J-3
850-002 ..... J-3
850-005 ..... J-8
850-006 ..... J-4
850-007 ..... J-4
850-013 ..... J-4
850-014 ..... J-4
850-181 ..... J-29
850-183 ..... J-29
850-318 ..... J-3
850-319 ..... J-3
852-004 ..... J-6
852-005 ..... J-6
852-006 ..... J-17
852-007 ..... J-17
852-008 ..... J-5
852-009 ..... J-5
852-016 ..... J-6
852-018 ..... J-6
852-019 ..... J-6
852-030 ..... J-11
852-031 ..... J-11
852-037 ..... J-6

© 2022 Glenair, Inc • 1211 Air Way, Glendale, CA 91201 • 818-247-6000 • www.glenair.com • U.S. CAGE code 06324 • SuperNIne™ Catalog
Dimensions in Inches (millimeters) are subject to change without notice.

SuperNine®

Part number index

852-042 ..... J-9
852-043 ..... J-9
852-056 ..... J-13
852-057 ..... J-13
852-082 ..... J-13
852-083 ..... J-13
852-103 ..... J-7
852-106 ..... J-7
853-003 ..... J-19
853-004 ..... J-19
853-013 ..... J-21
853-014 ..... J-21
853-017 ..... J-21
853-018 ..... J-21
853-024 ..... J-21
853-025 ..... J-21
854-001 ..... J-26
854-002 ..... J-26
8571-0001 ..... C-25
8571-0002 ..... C-26
8571-0003 ..... C-27
857-104 ..... J-29
857-105 ..... J-29
857-150 ..... J-4
857-151 ..... J-4
857-189 ..... J-4
857-190 ..... J-4
8572-0001 ..... C-28
8572-0002 ..... C-29
8572-0003 ..... C-30
8573-0001 ..... C-32
8573-0002 ..... C-33
858-003 ..... C-25, J-37
858-004 ..... C-25, J-37
858-005 ..... C-25, J-37
858-006 ..... C-25, J-37
858-028 ..... C-29, J-37
858-029 ..... C-29, J-37
858-030 ..... C-19, J-37
858-031 ..... C-19, J-37
858-063 ..... C-11, J-37
858-064 ..... C-11, J-37
858-069 ..... J-37
858-070 ..... J-37
858-100 ..... C-91
858-101 ..... C-91
859-006 ..... J-42
859-007 ..... C-11, J43
859-007 ..... J-43
859-018 ..... J-42
859-019 ..... J-17
859-025 ..... B-57
859-026 ..... B-57
859-046 ..... B-57
859-047 ..... J-43
859-049 ..... C-19, J-44
859-049 ..... J-44
859-050 ..... J-42
859-051 ..... J-43
859-072 ..... J-42
859-101 ..... C-19
859-101 ..... J-42
859-106 ..... J-49
859-123 ..... J-42
859-134 ..... C-19
859-134 ..... J-43
859-163 ..... J-44
859-184 ..... J-43
859-210 ..... J-42
859-211 ..... J-42
870H001 ..... H-24
870H002 ..... H-226
870H005 ..... H-28
871H004 ..... H-30
961-001 ..... B-68
961-002 ..... B-68
961-003 ..... B-68
961-004 ..... B-68
963-003-26 ..... C-23, C-25
963-033-24 ..... C-22, C-25
963-033-26 ..... C-23, C-25
963-037-24 ..... C-11, C-22
963-110 ..... C-24, C-28
D38999/22 ..... H-4
D38999/22 ..... H-5
D38999/28 ..... H-4
D38999/32 ..... H-4
D38999/32 ..... H-5
D38999/33 ..... H-4
D38999/33 ..... H-5
FO1000 ..... G-28
FO1001 ..... G-30
FO1002 ..... G-32
FO1003 ..... G-34
FO1004 ..... G-36
FO1005 ..... G-38
M22520/1-01 ..... J-43
M22520/1-04 ..... J-43
M22520/2-01 ..... C-19
M22520/2-01 ..... J-42
M22520/2-07 ..... J-42
M22520/2-09 ..... J-42
M22520/2-10 ..... J-42
M22520/2-13 ..... J-42
M22520/2-16 ..... J-42
M22520/23-01 ..... B-57
M22520/23-02 ..... B-57
M22520/2-31 ..... J-42
M22520/2-35 ..... J-42
M22520/2-37 ..... J-17
M22520/2-37 ..... J-42

© 2022 Glenair, Inc • 1211 Air Way, Glendale, CA 91201 • 818-247-6000 • www.glenair.com • U.S. CAGE code 06324 • SuperNine™ Catalog
Dimensions in Inches (millimeters) are subject to change without notice.

Part number index

INDEX

M22520/4-01 . . . . . J-42
M22520/4-02 . . . . . J-42
M22520/5-01 . . . . . C-19
M22520/5-01 . . . . . J-43
M22520/5-03 . . . . . J-43
M22520/5-05 . . . . . J-43
M22520/5-105 . . . . . J-43
M22520/5-45 . . . . . C-19
M22520/5-45 . . . . . J-43
M29504/04 STYLE 1 . . . . . G-6
M29504/04 STYLE 2 . . . . . G-8
M29504/05 STYLE 1 . . . . . G-7
M29504/05 STYLE 2 . . . . . G-9
M39029/102 . . . . . J-6
M39029/103 . . . . . J-6
M39029/106 . . . . . J-4
M39029/107 . . . . . J-4
M39029/113 . . . . . J-19
M39029/114 . . . . . J-19
M39029/121 . . . . . J-3
M39029/122 . . . . . J-3
M39029/56 . . . . . J-3
M39029/58 . . . . . J-3
M39029/59 . . . . . J-17
M39029/60 . . . . . J-17
M39029/76 . . . . . J-5
M39029/77 . . . . . J-5
M81969/1-05 . . . . . J-44
M81969/14-01 . . . . . J-44
M81969/14-03 . . . . . J-44
M81969/14-04 . . . . . J-44
M81969/14-06 . . . . . J-44
M81969/14-10 . . . . . J-44
M81969/14-12 . . . . . C-19, J-44
M81969/14-12 . . . . . J-44
M81969/1-05 . . . . . J-44
M81969/8-13 . . . . . J-44
M85049/103 . . . . . H-5
M85049/104 . . . . . H-5
M85049/105 . . . . . H-5
M85049/115 . . . . . H-5
M85049/115S H-5
M85049/117 . . . . . H-5
M85049/117S H-5
M85049/124 . . . . . H-4
M85049/124 . . . . . H-4
M85049/126 . . . . . H-4
M85049/126S H-4
M85049/14 . . . . . H-5
M85049/14S H-5
M85049/15- H-4
M85049/155 . . . . . H-4
M85049/15G H-4
M85049/15H H-4
M85049/16- H-4
M85049/16G H-4
M85049/16H H-4
M85049/16S H-4
M85049/20 . . . . . H-4
M85049/21 . . . . . H-4
M85049/38 . . . . . H-4
M85049/38S H-4
M85049/39 . . . . . H-4
M85049/39S H-4
M85049/45 . . . . . H-5
M85049/46 . . . . . H-5
M85049/69 . . . . . H-5
M85049/78 . . . . . H-4
M85049/79 . . . . . H-4
M85049/88 . . . . . H-4
M85049/88 . . . . . H-5
M85049/88N H-4
M85049/89 . . . . . H-4
M85049/89 . . . . . H-5
M85049/90 . . . . . H-4
M85049/90 . . . . . H-5
M85049/90N H-4
M85049/91 . . . . . H-4
M85049/91 . . . . . H-5
M85049/92 . . . . . H-4
M85049/92 . . . . . H-5
M85049/94 . . . . . H-4
M85049/95 . . . . . H-4
M85049/96 . . . . . H-4
M850498/89N H-4
M85528/1 . . . . . H-4
M85528/2 . . . . . H-4
M85528/3 . . . . . H-4
TG-90 . . . . . J-52

© 2022 Glenair, Inc • 1211 Air Way, Glendale, CA 91201 • 818-247-6000 • www.glenair.com • U.S. CAGE code 06324 • SuperNIne™ Catalog
Dimensions in Inches (millimeters) are subject to change without notice.

MIL-DTL-38999 DERIVATIVES AND OTHER

Mil-Aero Connector Specials

INNOVATIVE TERMINATION TECHNOLOGIES



Flex and
Rigid Flex



Compliant (Press-Fit)



Insertable
Solder Cups



Variable-Length
PC Tails



Ground Plane
Inserts

INNOVATIVE SHELL PACKAGE MODIFICATIONS



Mounting Flange Modifications



Bulkhead Penetrators



Integrated/Housed Electronics



Integrated Band/Boot Porch

NON-STANDARD CONTACT LAYOUTS



Hybrid Power Contact
Arrangement



Sealed Coax Insert Arrangement



Hybrid Shielded Contact / Signal
Contact Insert Arrangement



Optoelectronic (Transmitter/
Receiver) Contact Arrangement

INNOVATIVE MATING TECHNOLOGIES



Center Jackpost and
Guide Pin Integration



QDC Quick-Disconnect
Push-Pull Mating



Quick-Disconnect Lanyard-Release Assemblies

MISSION-CRITICAL

INTERCONNECT SOLUTIONS

Glenair, Inc.

1211 Air Way • Glendale, California • 91201-2497

Telephone: 818-247-6000 • Fax: 818-500-9912 • sales@glenair.com

www.glenair.com

Glenair East
20 Sterling Drive
Wallingford, CT
06492

Telephone:
203-741-1115
Facsimile:
203-741-0053
sales@glenair.com

Glenair Microway Systems
7000 North Lawndale Avenue
Lincolnwood, IL
60712

Telephone:
847-679-8833
Facsimile:
847-679-8849

Glenair GmbH
Schaberweg 28
61348 Bad Homburg
Germany

Telephone:
06172 / 68 16 0
Facsimile:
06172 / 68 16 90
info@glenair.de

Glenair Italia S.p.A.
Via Del Lavoro, 7
40057 Quarto Inferiore –
Granarolo dell'Emilia
Bologna, Italy

Telephone:
+39-051-782811
Facsimile:
+39-051-782259
info@glenair.it

Glenair Korea
6-21Tapsil-ro 58beon-gil
Giheung-gu, Yongin-si
Gyeonggi-do
Republic of Korea

Telephone:
+82-07-5067-2437
Facsimile:
+82-504-375-4549
sales@glenair.kr

Glenair UK Ltd
40 Lower Oakham Way
Oakham Business Park
Mansfield, Notts
NG18 5BY England

Telephone:
+44-1623-638100
Facsimile:
+44-1623-638111
sales@glenair.co.uk

Glenair Nordic AB
Gustav III : S Boulevard 42
SE-169 27 Solna
Sweden

Telephone:
+46-8-50550000
sales@glenair.se

Glenair Iberica
C/ La Vega, 16
45612 Velada
Spain

Telephone:
+34-925-89-29-88
Facsimile:
+34-925-89-29-87
sales@glenair.es

Glenair France SARL
7, Avenue Parmentier
Immeuble Central Parc #2
31200 Toulouse
France

Telephone:
+33-5-34-40-97-40
Facsimile:
+33-5-61-47-86-10
sales@glenair.fr

© 2022 Glenair, Inc.

Printed in U.S.A.

CAT-149 • May 2022