MS27476
Box Mount Hermetic Receptacle
MIL-DTL-38999 Series II

How To Order: *MS*

Shell Style
MS27476 - Box Mount, Series II

Connector Material / Finish
D - Carbon Steel - Fused Tin Finish
E - Stainless Steel - Passivate Finish
N - Stainless Steel - Nickel Finish

Contact Termination
P - Pin, Solder Cup
X - Pin, Eyelet
C - Pin, PCB Flex Feedthrough
S - Socket, Solder Cup
Z - Socket, Eyelet
D - Socket, PCB Flex Feedthrough

MS27476 Y 10 N 35 P A

Class
Y- Hermetic

Shell Size
8,10,12,14,16,18,20,22,24

Insert Arrangement
MIL-DTL-38999 Series II Hermetic Inserts Per MIL-STD-1560; See Pages B-2 - B-4

Alternate Key Position
A, B, C, D
(Omit for Normal)

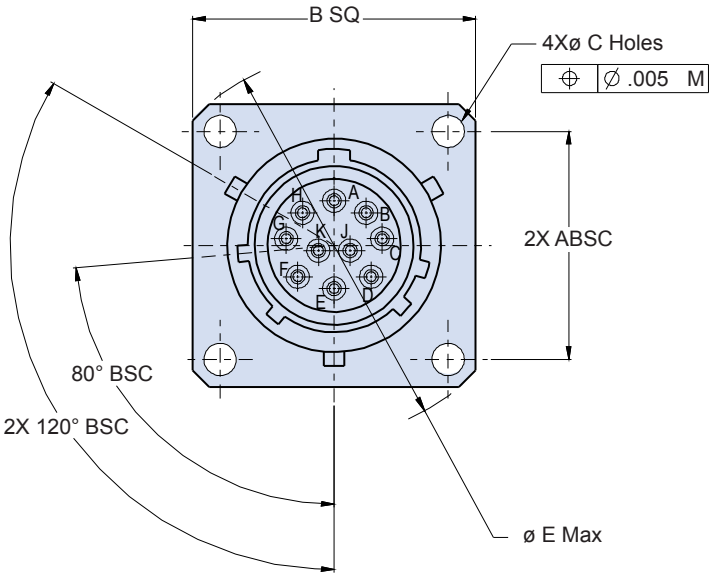

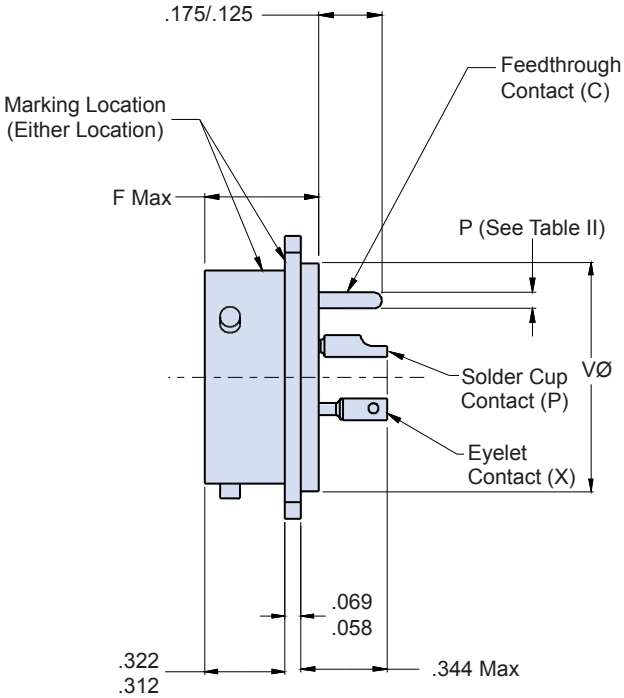

Dimensions in Inches (millimeters) are subject to change without notice.

© 2013 Glenair, Inc.
U.S. CAGE Code 06324
Printed in U.S.A.

232-100-H2
Box Mount Hermetic Receptacle
MIL-DTL-38999 Series II Type

Glenair®

How To Order: *Commercial*

Connector Series
233-002 - Series II Type Hermetic

Shell Style
H2 - Box Mount Hermetic Receptacle

Shell Size
08,10,12,14,16,18,20,22,24

Contact Termination
P - Pin, Solder Cup
X - Pin, Eyelet
C - Pin, PCB
S - Socket, Solder Cup
Z - Socket, Eyelet
D - Socket, PCB

232 - 100 - H2 Z1 8 - 35 P N

Connector Material / Finish
ZL - CRES, Nickel
Z1 - CRES, Passivated
FT - Carbon Steel, Fused Tin

Insert Arrangement
Per MIL-STD-1560;
See Pages B-2 - B-4

Alternate Key Position
A, B, C, D,
(*N* = Normal)

TABLE I: CONNECTOR DIMENSIONS

SHELL SIZE	A BSC	B SQ MAX	ø C HOLES	ø E MAX	F MAX	V Diameter
8/08	.594(15.1)	.828(21.0)	.130(3.3) .115(2.9)	1.078(27.4)	.453(11.5)	.562(14.3)
10	.719(18.3)	.954(24.2)		1.266(32.2)		.672(17.1)
12	.812(20.6)	1.047(26.6)		1.391(35.3)		.781(19.8)
14	.906(23.0)	1.141(29.0)		1.516(38.5)		.906(23.0)
16	.969(24.6)	1.234(31.3)		1.641(41.7)		1.031(26.2)
18	1.062(27.0)	1.328(33.7)		1.766(44.9)		1.156(29.4)
20	1.156(29.4)	1.453(36.9)		1.891(48.0)		1.250(31.8)
22	1.250(31.8)	1.578(40.1)		2.016(51.2)		1.375(34.9)
24	1.375(34.9)	1.703(43.3)	.157(4.0) .142(3.6)	2.204(56.0)	.484(12.3)	1.500(38.1)

TABLE II: CONTACT SIZE

PRINTED CIRCUIT TAIL CONFIGURATIONS
CONTACT STYLE C AND D

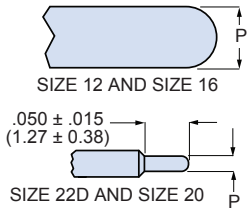

Contact Size	ø P
22D	.011 (0.28) .015 (0.38)
20	.024 (0.61) .028 (0.71)
16	.0635 (1.61) .0615 (1.56)
12	.095 (2.41) .093 (2.36)

TABLE I (CONTINUED): CONNECTOR DIMENSIONS

SHELL SIZE	ø G HOLES	ø H MIN	ø J BSC
8/08	.133(3.4) .123(3.1)	.570(14.5)	.594(15.1)
10		.690(17.5)	.719(18.3)
12		.820(20.8)	.812(20.6)
14		.940(23.9)	.906(23.0)
16		1.070(27.2)	.969(24.6)
18		1.190(30.2)	1.062(27.0)
20		1.320(33.5)	1.156(29.4)
22	.159(4.0) .149(3.8)	1.440(36.6)	1.250(31.8)
24		1.570(39.9)	1.375(34.9)

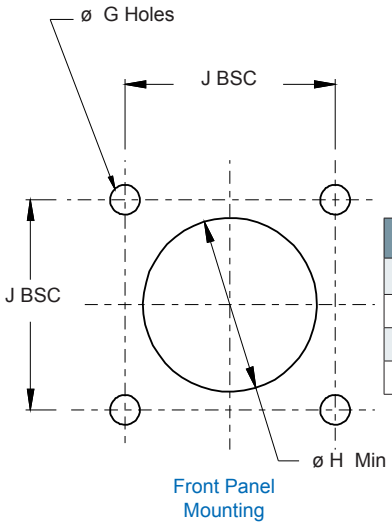

HERMETIC LEAK RATE MOD CODES

Designator	Required Leak Rate
–585A	1 x 10^{-10} cc Helium per second
–585B	1 x 10^{-9} cc Helium per second
–585C	1 x 10^{-8} cc Helium per second

WIRE ACCOMODATION

Contact Size	Wire Guage
22D	#22 - #28
20	#20 - #24
16	#16 - #20
12	#12 - #14

Dimensions in Inches (millimeters) are subject to change without notice.

© 2013 Glenair, Inc.
U.S. CAGE Code 06324
Printed in U.S.A.