Size 23 Crimp Contacts for Series 792 Connectors

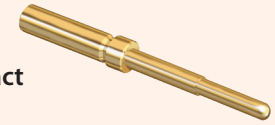

Pin Contact

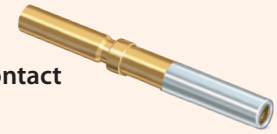

Socket Contact

Size 23 contacts fit 22-28 AWG wire. Compatible with Glenair Series 792 connectors only. Copper alloy with 50 microinches gold over nickel plating. These machined contacts conform to AS39029 performance requirements. Bulk packaged. Split-tine socket contact has stainless steel hood.

Ordering Information

Contact Type	AWG Wire Size	Part Number
Pin, Size 23, Ser. 792	22-28	850-163
Socket, Size 23, Ser. 792	22-28	850-164

Technical Data

Specifications

- **Operating temperature**: -65° to +150°C
- **Current rating**: 5A
- **Crimp Tensile Strength**

Wire Size	Axial Load (lbs.)
22	12
24	8
26	5
28	3

- **Voltage Drop:** 73 millivolts maximum, 5A, 25° C, 22 AWG wire

Construction

- **Contact body**: copper alloy
- **Socket hood**: stainless steel, passivated
- **Contact finish**: 50 microinches minimum gold plating over nickel underplate

Crimp Tools

Mil Spec Hand Tool

809-015
(M22520/2-01)

Positioner for Hand Tool

859-214
(DMC# K2104)

Insertion/Removal Tool

809-088

850-163 Pin Contact Dimensions

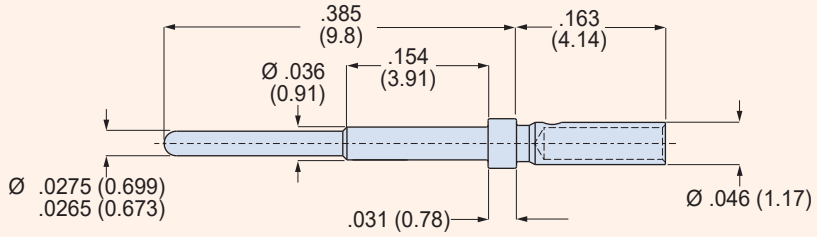

850-164 Socket Contact Dimensions

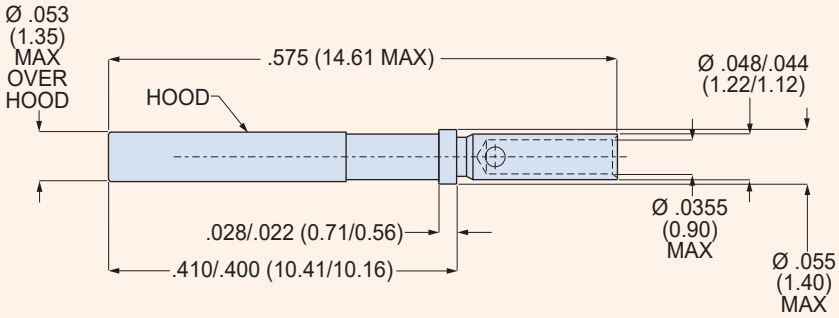

Recommended Wire Strip Length

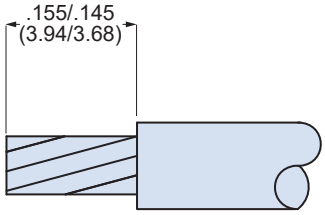

© 2019 Glenair, Inc • 1211 Air Way, Glendale, CA 91201 • 818-247-6000 • www.glenair.com • U.S. CAGE code 06324 • Series 792
Dimensions in Inches (millimeters) are subject to change without notice.