BATTLE-TESTED

STAR-PAN™

Radio cables and adapters

STAR-PAN RADIO CABLES AND ADAPTERS

Part No.	NATO Stock No. NSN	Description	Page No.
808-087		AN/PRC-117F Radio Cable (PAN Port)	49
808-035	5995-01-668-8687	AN/PRC-117G Radio Cable	50
808-088	5995-01-692-0106	AN/PRC-117G Radio Cable (PAN Port)	51
808-039		AN/PRC-148 JEM Radio Adapter	52
TS8-515		AN/PRC-148 Sync Serial Adapter	53
TS8-431		AN/PRC-152A Radio Adapter	54
808-032	5995-01-668-8863	AN/PRC-152A Radio Adapter	55
TS8-513		AN/PRC-152A Radio Side Connector	56
TS8-410		AN/PRC 152 / 152A Sync Serial Adapter	57
TS8-508		AN/PRC-161 BATS-D Radio Adapter	58
TS8-509		AN/PRC-161 BATS-D Radio Adapter, PAN port	59
808-166		AN/PRC-161 BATS-D Radio Adapter	60
TS8-409		AN/PRC-161 Radio Ethernet Adapter	61
TS8-457		AN/PRC-163 Radio Battery Adapter, Red I/O	62
TS8-458		AN/PRC-163 Radio Battery Adapter, Black I/O	63
TS8-495		AN/PRC-163 Radio Adapter, with Red/Black Switch (PAN port)	64
TS8-411		AN/PRC-167 Multi-Function I/O (MFI) Cable	65
808-132		Elbit PNR 1000 Radio Adapter	66
TS8-470		Elbit PNR 1000 Radio Adapter	67
TS8-446	5995-01-691-2527	Harris RF-7850S-TR Radio Cable with Mighty Mouse Plug	68
808-257	5995-01-683-8677	Harris RF-7800S Radio Cable	69
808-148		Harris RF-7800S Radio Cable (Radio Host)	70
TS8-466		Harris RF-7800S-TR Radio Cable, PAN Port Connection	71
TS8-426		Harris RF-7850M Sync Serial Adapter	72
808-044		Raytheon RT-1922 Microlight SADL Radio Cable	73
TS3-009		Thales PR4G Radio Ethernet Cable	74
TS3-016		TrellisWare TSM Shadow Radio Adapter	75
TS8-486		TS-950 Radio Power Booster	76
TS1-094		Right-Angle Cable for use with TS8-486	77
TS1-003		Silvus SC4200 Radio Data Cable, AUX port	78
TS8-539		MPU5 Ethernet Cable	79
TS8-544		MPU5 Ethernet Cable with Radio Power Boost Option	80

 © 2024 Glenair, Inc • 1211 Air Way, Glendale, CA 91201 • 818-247-6000 • www.glenair.com • U.S. CAGE code 06324

BATTLE-TESTED

STAR-PAN™

Radio cables and adapters

808-087 AN/PRC-117F PAN Port Radio Cable

RADIO

AN/PRC-117F, AN/PRC-150, RF-5800H, RF-7800H-MP Radio Cable

SPECIFICATIONS

- For interconnection of referenced radio types to STAR-PAN power / data hubs
- Synchronous Serial Interface (SSI) Data Downlink Adapter Cable
- Santoprene jacketed cable, black
- Ergonomic overmolding
- Mighty Mouse 807 (NATO standard) connector and PRC 117F connector
- Weight, 36" cable: (consult factory)
- Export classification: ECCN 3A611.x
- PAN port connection

HOW TO ORDER

Sample Part Number:	**808-087**	**R**	**-32**
Cable Series	AN/PRC / RF Radio Data Adapter Cable		
Data Connector Angle	**R** = Right angle data connector **Omit** = standard straight data connector		
Length Designator	In inches **Omit for default length of 36.00"**		

STAR-PAN™

QUALIFIED FOR USE WITH ALL STAR-PAN POWER / DATA HUBS

LIGHT, II, IV, AND VI

HUB PORT DESIGNATOR:

PAN

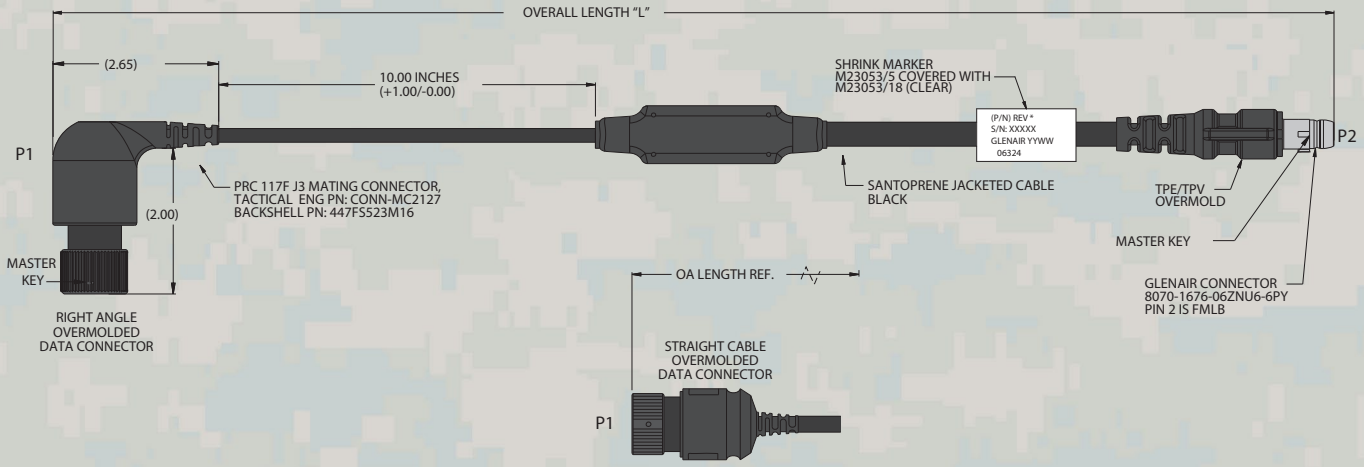

Dimensions are subject to change without notice.

BATTLE-TESTED

STAR-PAN™

Radio cables and adapters

808-035 AN/PRC-117G Radio Cable

AN/PRC-117G, AN/PRC-160 RF-7800M-MP, RF7800H-MP Radio Cable

SPECIFICATIONS

- For interconnection of referenced man-pack radio type to STAR-PAN power / data hubs
- Nomex® braided wire protection, olive drab. Consult factory for other cable finish options
- Overmolded, ergonomic connector strain reliefs, desert tan
- Mighty Mouse 807 (NATO standard) connector and J4 Radio connector
- Weight, 32" cable: 90g
- Export classification: ECCN 3A611.x

HOW TO ORDER

Sample Part Number:	**808-035**		**-24**
Cable Series	AN/PRC-117G Radio Adapter Cable		
P2 Angle Option	**-R** = Right Angle **-U** = 180° **Omit** for straight (default)		
Length Designator	In inches (6.00" min.) **Omit for default length of 32.00"**		

QUALIFIED FOR USE WITH ALL STAR-PAN POWER / DATA HUBS

LIGHT, II, IV, AND VI

HUB PORT DESIGNATOR:

RADIO

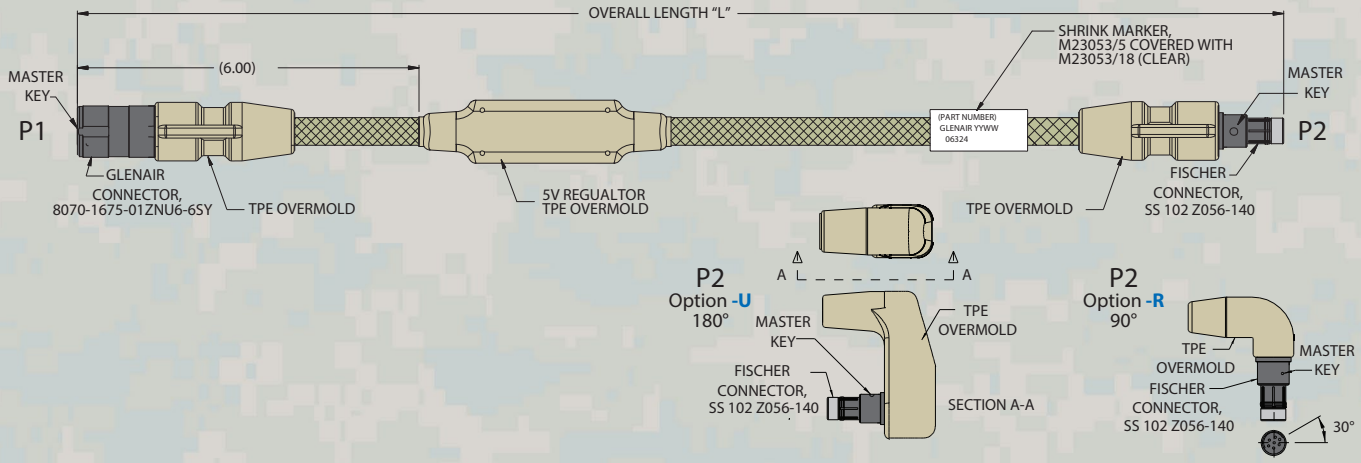

 © 2024 Glenair, Inc • 1211 Air Way, Glendale, CA 91201 • 818-247-6000 • www.glenair.com • U.S. CAGE code 06324 • STAR-PAN™ Tactical Interconnect Solutions
Dimensions are subject to change without notice.

BATTLE-TESTED

STAR-PAN™

Radio cables and adapters

808-088 AN/PRC-117G PAN Port Radio Cable

RADIO

AN/PRC-117G, AN/PRC-160 RF-7800M-MP, RF7800H-MP Radio Cable

SPECIFICATIONS

- For interconnection of referenced man-pack radio type to STAR-PAN power / data hubs
- Nomex® braided wire protection, olive drab. Consult factory for other cable finish options
- Overmolded, ergonomic connector strain reliefs, desert tan
- Mighty Mouse 807 (NATO standard) connector and J4 Radio connector.
- Weight, 32" cable: 90g
- Export classification: ECCN 3A611.x
- PAN Port connection

HOW TO ORDER

Sample Part Number:	**808-088**		**-36**
Cable Series	AN/PRC-117G / RF7800 Radio Adapter Cable		
P2 Angle Option	**-R** = Right Angle **-U** = 180° **Omit** for straight (default)		
Length Designator	In inches (6.00" min.) **Omit for default length of 32.00"**		

STAR-PAN™

QUALIFIED FOR USE WITH ALL STAR-PAN POWER / DATA HUBS

LIGHT, II, IV, AND VI

HUB PORT DESIGNATOR:

PAN

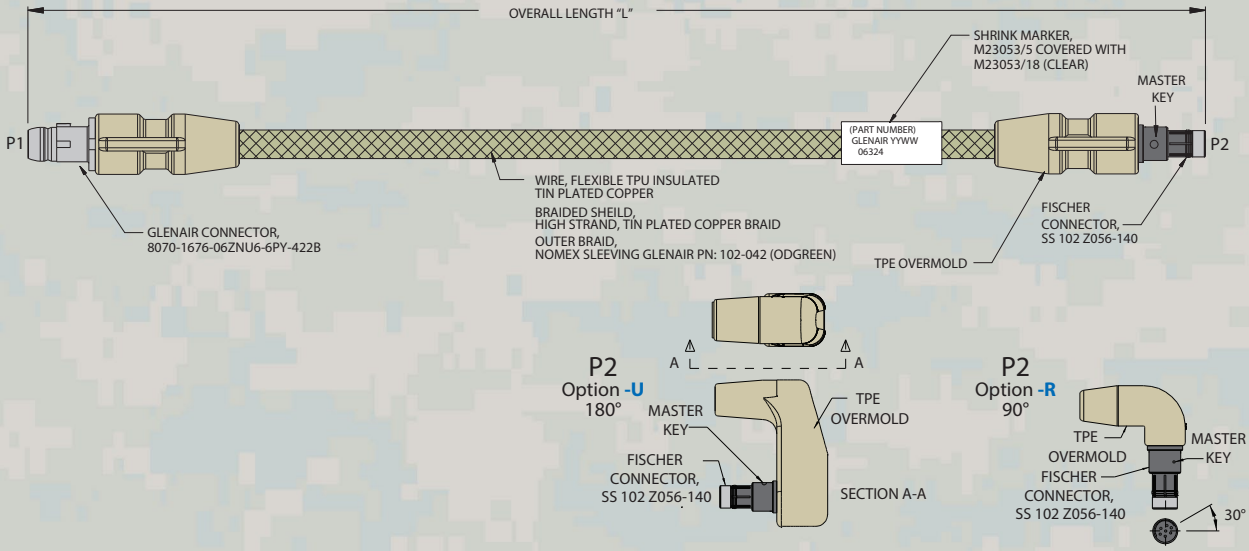

Dimensions are subject to change without notice.

BATTLE-TESTED

STAR-PAN™

Radio cables and adapters

808-039 AN/PRC-148 JEM Radio Adapter

AN/PRC-148 JEM Radio Adapter

SPECIFICATIONS

- For interconnection of referenced hand-held radio type to STAR-PAN power / data hubs
- Nomex® braided wire protection, olive drab. Consult factory for other cable finish options
- Overmolded, ergonomic connector strain reliefs, desert tan
- Black zinc-nickel stainless steel thumbscrew
- Mighty Mouse 807 (NATO standard) connectors
- Weight, 24" cable: 122g
- Export classification: ECCN 3A611.x

HOW TO ORDER

Sample Part Number:	**808-039**	**-24**
Adapter Series	AN/PRC-148 Radio Adapter Cable	
Length Designator	In inches (6.00" min.) **Omit for default length of 20.00"**	

QUALIFIED FOR USE WITH ALL STAR-PAN POWER / DATA HUBS

LIGHT, II, IV, AND VI

HUB PORT DESIGNATOR:

RADIO

RADIO POWER BOOST

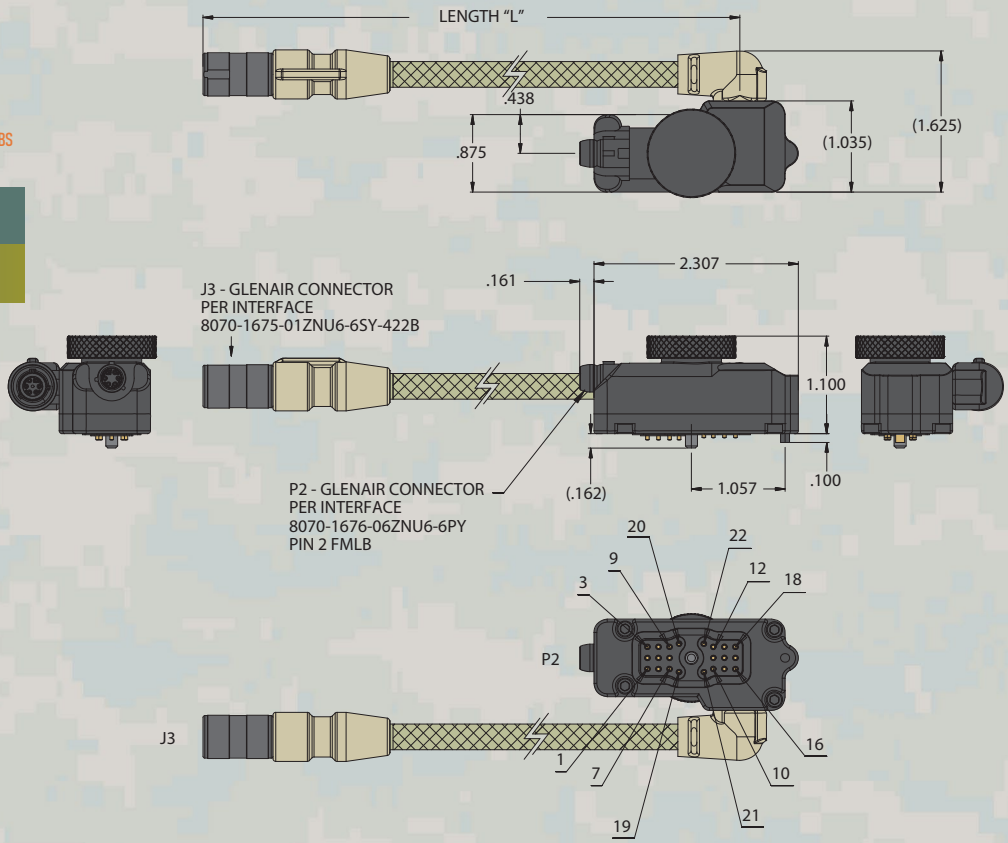

 © 2024 Glenair, Inc • 1211 Air Way, Glendale, CA 91201 • 818-247-6000 • www.glenair.com • U.S. CAGE code 06324 • STAR-PAN™ Tactical Interconnect Solutions
Dimensions are subject to change without notice.

BATTLE-TESTED

STAR-PAN™

Radio cables and adapters

TS8-515 AN/PRC-148 Sync Serial Adapter

RADIO

SPECIFICATIONS

- For interconnection of referenced hand-held radio type to STAR-PAN power / data hubs
- Integrated Audio to Data radio switch
- Aluminum housing, black zinc-nickel finish
- Black stainless steel thumbscrew
- Mighty Mouse 807 (NATO standard) connectors
- Weight 91g
- Export classification: ECCN 3A611.x

HOW TO ORDER

Sample Part Number:	**TS8-515**
Adapter Series	AN/PRC-148 Sync Serial Adapter

STAR-PAN™

QUALIFIED FOR USE WITH ALL STAR-PAN POWER / DATA HUBS

LIGHT, II, IV, AND VI

HUB PORT DESIGNATOR:

RADIO

RADIO POWER BOOST

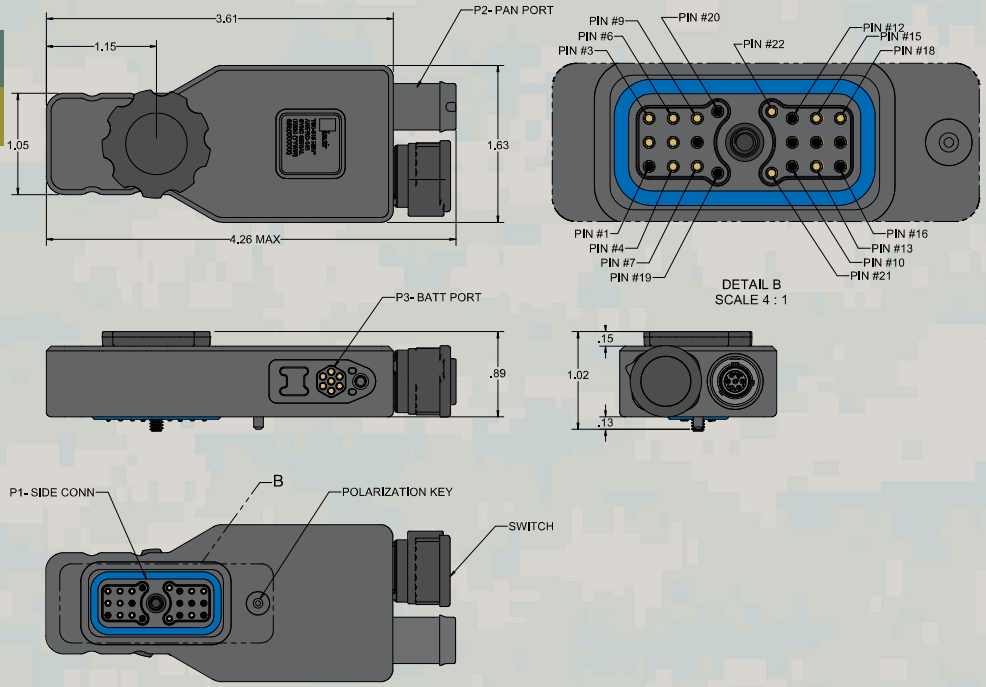

Dimensions are subject to change without notice.

BATTLE-TESTED

STAR-PAN™

Radio cables and adapters

TS8-431 AN/PRC-152A Radio Adapter

AN/PRC-152A Radio Adapter

SPECIFICATIONS

- For interconnection of referenced hand-held radio type to STAR-PAN power / data hubs
- Black zinc-nickel finish
- Weight: (consult factory)
- Mighty Mouse 807 (NATO standard) connectors
- Export classification: ECCN 3A611.x

HOW TO ORDER	
Sample Part Number:	**TS8-431**
Adapter Series	AN/PRC-152A Radio Adapter Cable

QUALIFIED FOR USE WITH ALL STAR-PAN POWER / DATA HUBS

LIGHT, II, IV, AND VI

HUB PORT DESIGNATOR:

RADIO

RADIO POWER BOOST

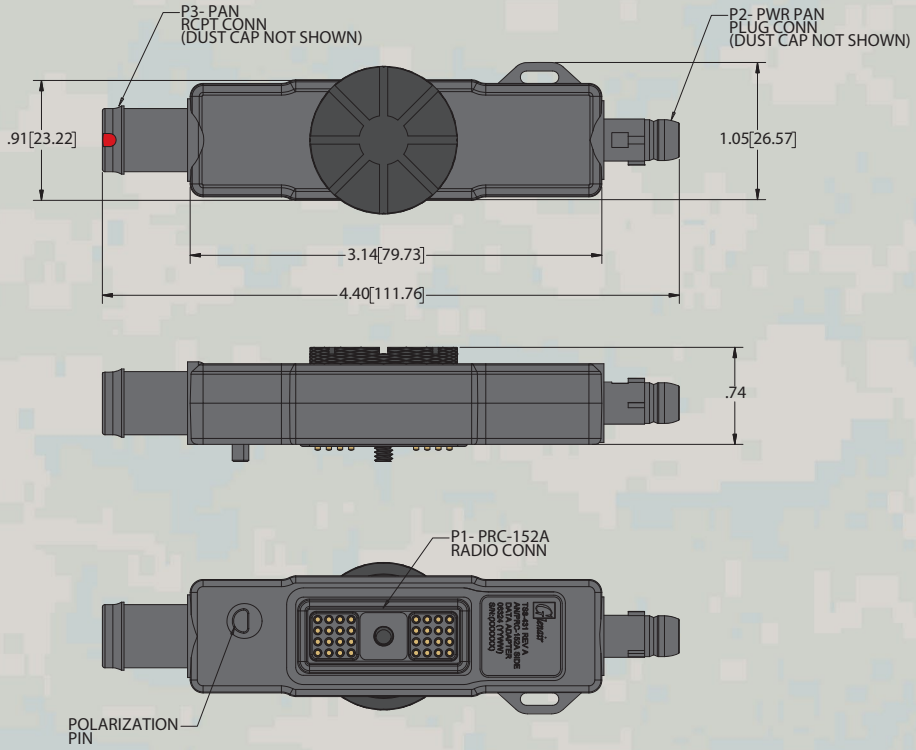

 © 2024 Glenair, Inc • 1211 Air Way, Glendale, CA 91201 • 818-247-6000 • www.glenair.com • U.S. CAGE code 06324 • STAR-PAN™ Tactical Interconnect Solutions
Dimensions are subject to change without notice.

BATTLE-TESTED

STAR-PAN™

Radio cables and adapters

808-032 AN/PRC-152A Radio Adapter

RADIO

AN/PRC-152A Radio Adapter

SPECIFICATIONS

- For interconnection of referenced hand-held radio type to STAR-PAN power / data hubs
- Nomex® braided wire protection, olive drab. Consult factory for other cable finish options
- Overmolded, ergonomic connector strain reliefs, desert tan
- Black zinc-nickel stainless steel thumbscrew
- Mighty Mouse 807 (NATO standard) connectors
- Weight, 24" cable: 116g
- Export classification: ECCN 3A611.x

HOW TO ORDER

Sample Part Number:	**808-032**	**-28**
Adapter Series	AN/PRC-152A Radio Adapter Cable	
Length Designator	In inches (6.00" min.) **Omit for default length of 24.00"**	

STAR-PAN™

QUALIFIED FOR USE WITH ALL STAR-PAN POWER / DATA HUBS

LIGHT, II, IV, AND VI

HUB PORT DESIGNATOR:

RADIO

RADIO POWER BOOST

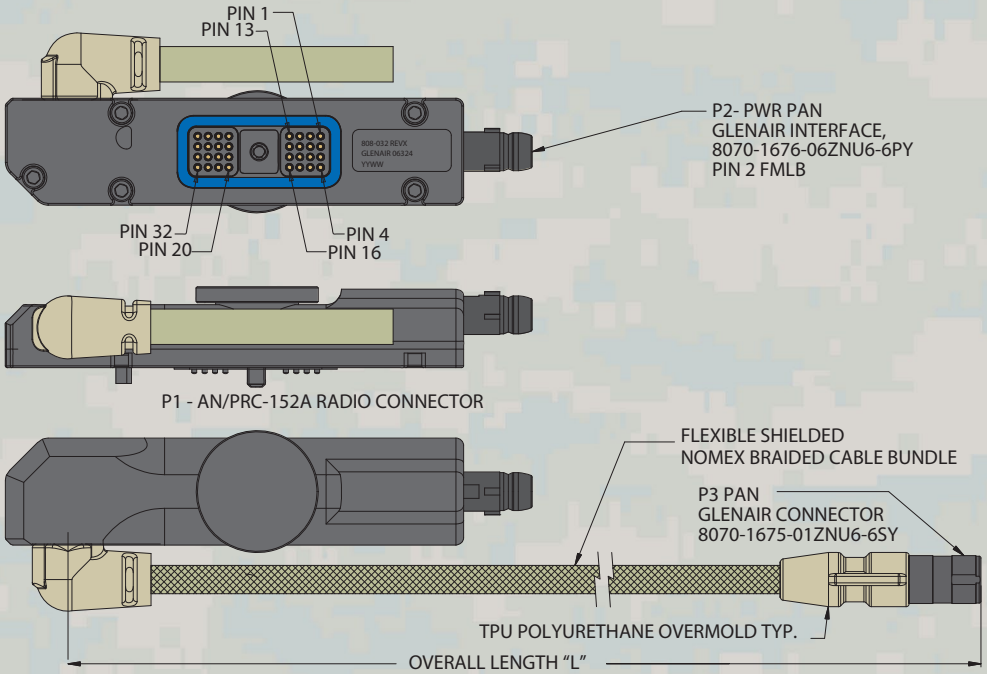

Dimensions are subject to change without notice.

BATTLE-TESTED

STAR-PAN™

Radio cables and adapters

TS8-513 AN/PRC-152A Radio Side Connector

AN/PRC-152A Radio Adapter

SPECIFICATIONS

- For interconnection of referenced hand-held radio type to STAR-PAN power / data hubs
- Aluminum, black zinc-nickel finish
- Black zinc-nickel stainless steel thumbscrew
- Mighty Mouse 807 (NATO standard) connector
- Export classification: ECCN 3A611.x

HOW TO ORDER	
Sample Part Number:	**TS8-513**
Adapter Series	AN/PRC-152A Radio Side Connector

QUALIFIED FOR USE WITH ALL STAR-PAN POWER / DATA HUBS

LIGHT, II, IV, AND VI

HUB PORT DESIGNATOR:

RADIO

RADIO POWER BOOST

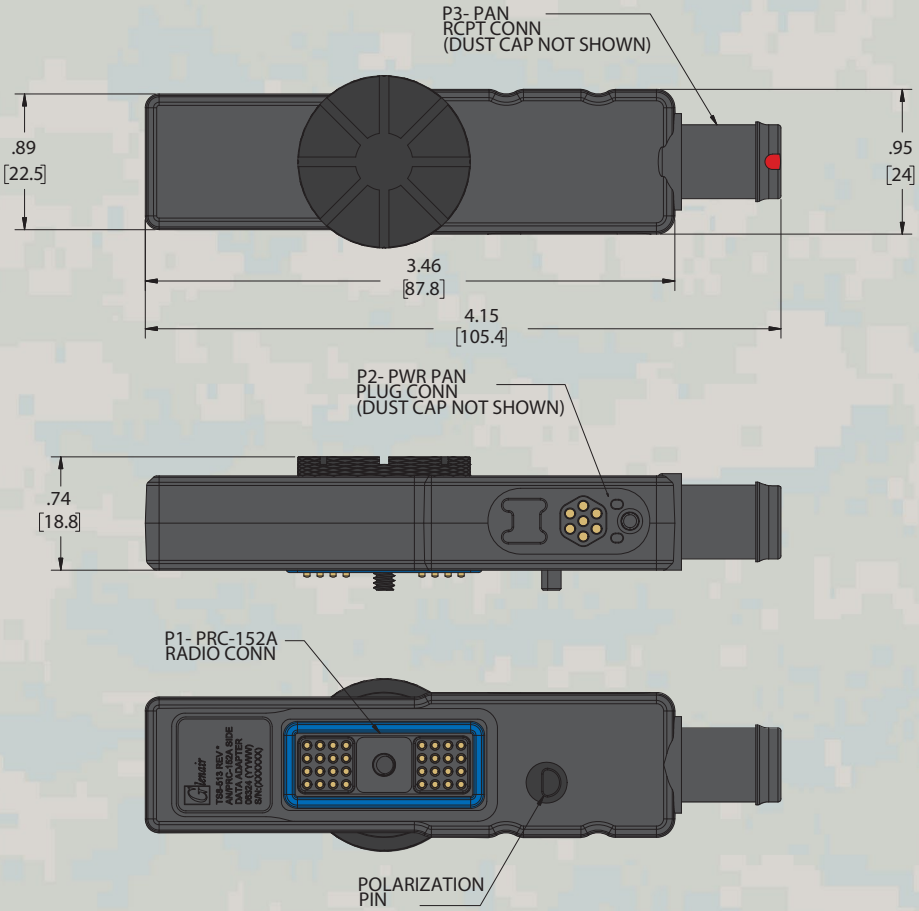

 © 2024 Glenair, Inc • 1211 Air Way, Glendale, CA 91201 • 818-247-6000 • www.glenair.com • U.S. CAGE code 06324 • STAR-PAN™ Tactical Interconnect Solutions
Dimensions are subject to change without notice.

BATTLE-TESTED

STAR-PAN™

Radio cables and adapters

TS8-410 AN/PRC 152/152A Sync Serial Adapter

RADIO

AN/PRC-152/152A Sync Serial Adapter

SPECIFICATIONS

- For interconnection of referenced hand-held radio type to STAR-PAN power / data hubs
- Aluminum housing, black zinc-nickel finish
- Black stainless steel thumbscrew
- Mighty Mouse 807 (NATO standard) connectors
- Weight 91g
- Export classification: ECCN 3A611.x
- Adapter Cable 808-047 sold separately

HOW TO ORDER

Sample Part Number:	**TS8-410**
Adapter Series	AN/PRC-152/152A Sync Serial Adapter

STAR-PAN™

QUALIFIED FOR USE WITH ALL STAR-PAN POWER / DATA HUBS

LIGHT, II, IV, AND VI

HUB PORT DESIGNATOR:

RADIO

RADIO POWER BOOST

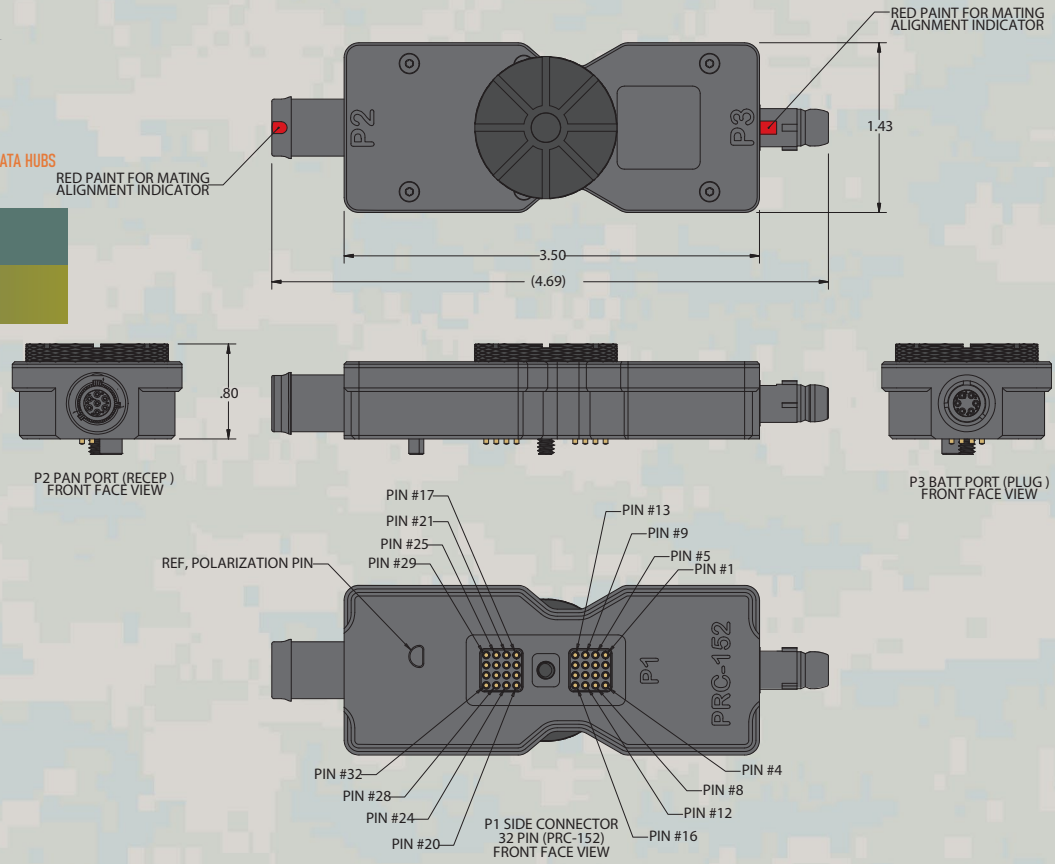

Dimensions are subject to change without notice.

BATTLE-TESTED

STAR-PAN™

Radio cables and adapters

TS8-508 AN/PRC-161 BATS-D Radio Adapter

AN/PRC-161 BATS-D Radio Adapter

SPECIFICATIONS

- For interconnection of referenced hand-held radio type to STAR-PAN power / data hubs
- Aluminum, black zinc-nickel finish
- Black zinc-nickel stainless steel thumbscrew
- Santoprene jacketed cable, black
- Mighty Mouse 807 (NATO standard) connector
- Export classification: ECCN 3A611.x

HOW TO ORDER

Sample Part Number:	**TS8-508**
Adapter Series	BATS-D AN/PRC 161 Radio Data Adapter Cable
Length Designator	In inches, 6.00" minimum **Omit for default length of 20.00"**

QUALIFIED FOR USE WITH ALL STAR-PAN POWER / DATA HUBS

LIGHT, II, IV, AND VI

HUB PORT DESIGNATOR:

RADIO

RADIO POWER BOOST

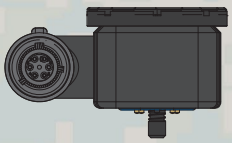

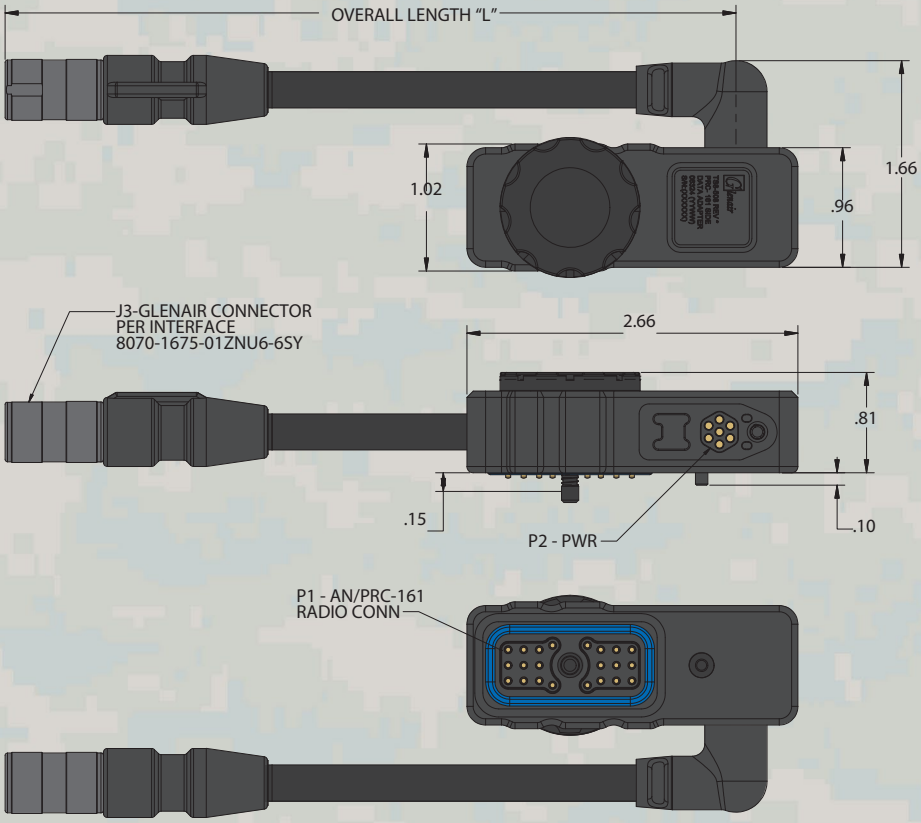

 © 2024 Glenair, Inc • 1211 Air Way, Glendale, CA 91201 • 818-247-6000 • www.glenair.com • U.S. CAGE code 06324 • STAR-PAN™ Tactical Interconnect Solutions
Dimensions are subject to change without notice.

BATTLE-TESTED

STAR-PAN™

Radio cables and adapters

TS8-509 AN/PRC-161 BATS-D Radio Adapter, PAN port

RADIO

AN/PRC-161 BATS-D Radio Adapter

SPECIFICATIONS

- For interconnection of referenced hand-held radio type to STAR-PAN power / data hubs
- Aluminum, black zinc-nickel finish
- Black zinc-nickel stainless steel thumbscrew
- Santoprene jacketed cable, black
- Mighty Mouse 807 (NATO standard) connector
- Export classification: ECCN 3A611.x

HOW TO ORDER

Sample Part Number:	**TS8-509**
Adapter Series	BATS-D AN/PRC 161 Radio Data Adapter Cable
Length Designator	In inches, 6.00" minimum **Omit for default length of 20.00"**

STAR-PAN™

QUALIFIED FOR USE WITH ALL STAR-PAN POWER / DATA HUBS

LIGHT, II, IV, AND VI

HUB PORT DESIGNATOR:

PAN

RADIO POWER BOOST

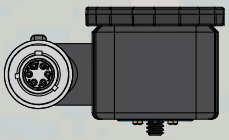

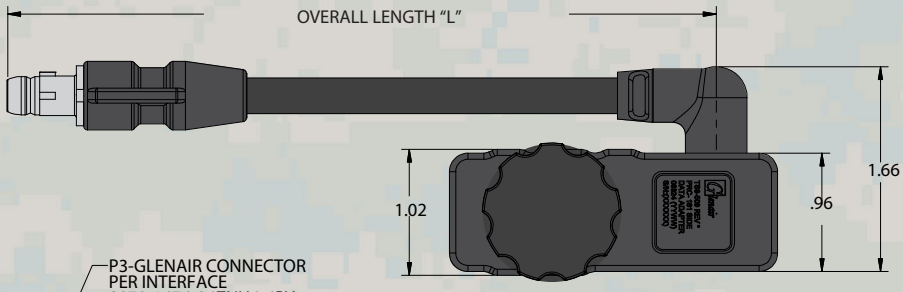

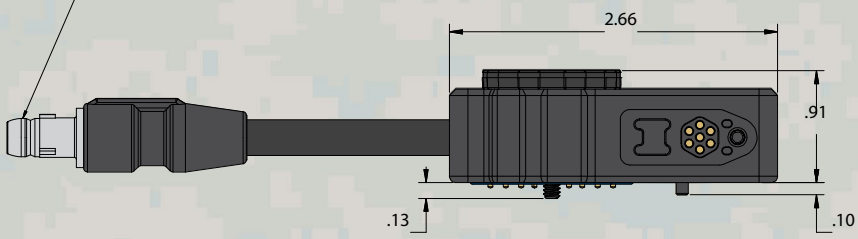

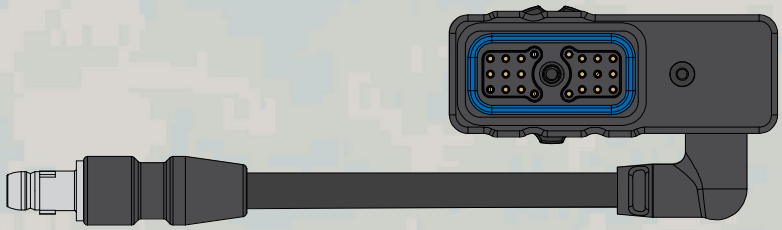

Dimensions are subject to change without notice.

BATTLE-TESTED

STAR-PAN™

Radio cables and adapters

808-166 AN/PRC-161 BATS-D Radio Adapter

AN/PRC-161 BATS-D Radio Adapter

QUALIFIED FOR USE WITH ALL STAR-PAN POWER / DATA HUBS

LIGHT, II, IV, AND VI

HUB PORT DESIGNATOR:

RADIO

RADIO POWER BOOST

SPECIFICATIONS

- For interconnection of referenced hand-held radio type to STAR-PAN power / data hubs
- Nomex® braided wire protection, olive drab. Consult factory for other cable finish options
- Overmolded, ergonomic connector strain reliefs, desert tan.
- Aluminum housing, black zinc-nickel finish
- Black stainless steel thumbscrew
- Mighty Mouse 807 (NATO standard) connectors.
- Weight, 20" cable: 122g
- Export classification: ECCN 3A611.x

HOW TO ORDER

Sample Part Number:	**808-166**	**-24**
Cable Series	BATS-D AN/PRC 161 Radio Data Adapter Cable	
Length Designator	In inches, 6.00" minimum **Omit for default length of 20.00"**	

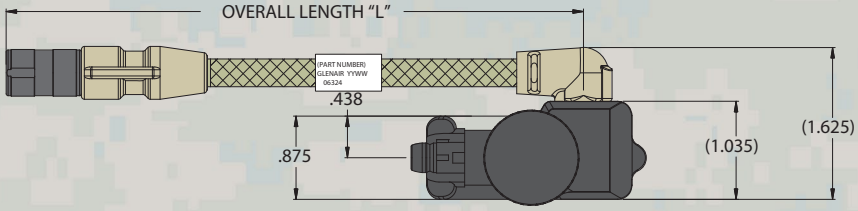

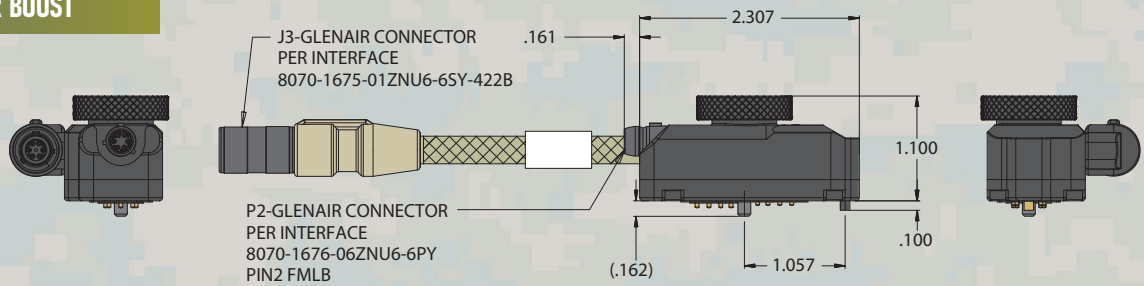

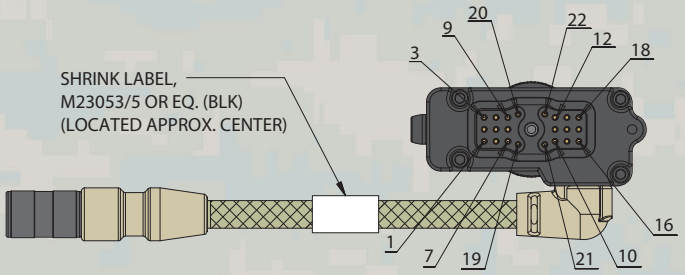

 © 2024 Glenair, Inc • 1211 Air Way, Glendale, CA 91201 • 818-247-6000 • www.glenair.com • U.S. CAGE code 06324 • STAR-PAN™ Tactical Interconnect Solutions
Dimensions are subject to change without notice.

BATTLE-TESTED

STAR-PAN™

Radio cables and adapters

TS8-409 AN/PRC-161 PAN Port Radio Ethernet Adapter

RADIO

AN/PRC-161
Radio Ethernet Adapter

QUALIFIED FOR USE WITH ALL STAR-PAN POWER / DATA HUBS

LIGHT, II, IV, AND VI

HUB PORT DESIGNATOR:
PAN

RADIO POWER BOOST

SPECIFICATIONS

- For interconnection of referenced hand-held radio type to STAR-PAN power / data hubs
- Nomex® braided wire protection, olive drab. Consult factory for other cable finish options
- Overmolded, ergonomic connector strain reliefs, desert tan.
- Aluminum housing, black zinc-nickel finish
- Black stainless steel thumbscrew
- Mighty Mouse 807 (NATO standard) connectors.
- Weight, 32" cable: (consult factory)
- Export classification: ECCN 3A611.x

HOW TO ORDER

Sample Part Number:	**TS8-409**	**-24**
Adapter Series	BATS-D AN/PRC 161 Radio Data Adapter Cable	
Length Designator	In inches, 10.00" minimum **Omit for default length of 32.00"**	

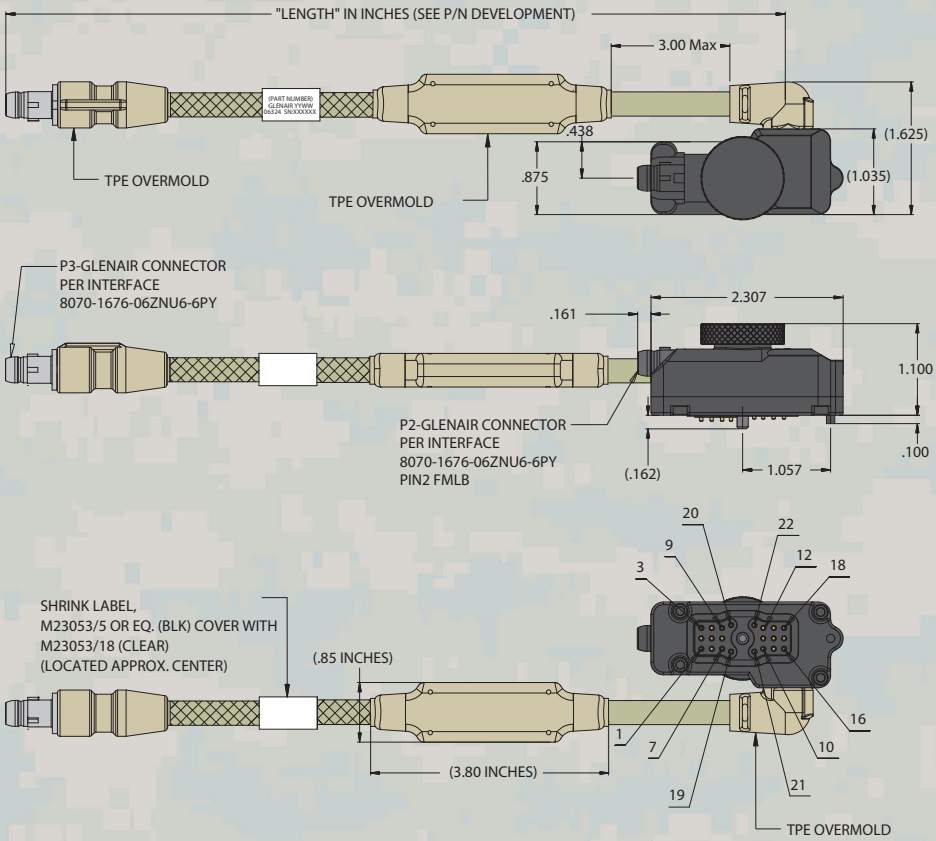

Dimensions are subject to change without notice.

BATTLE-TESTED

STAR-PAN™

Radio cables and adapters

TS8-457 AN/PRC-163 Radio Battery Adapter, Red I/O

RADIO CABLES AND ADAPTERS

AN/PRC-163
Radio Adapter, Red I/O

QUALIFIED FOR USE WITH ALL STAR-PAN POWER / DATA HUBS

LIGHT, II, IV, AND VI

HUB PORT DESIGNATOR:

RADIO

RADIO POWER BOOST

SPECIFICATIONS

- For interconnection of referenced hand-held radio type to STAR-PAN power / data hubs
- Black stainless steel thumbscrew
- Mighty Mouse 807 (NATO standard) connectors
- Weight: (consult factory)
- Red I/O connection
- Export classification: ECCN 3A611.x

HOW TO ORDER	
Sample Part Number:	**TS8-457**
Adapter Series	AN/PRC-163 Radio Adapter, red I/O

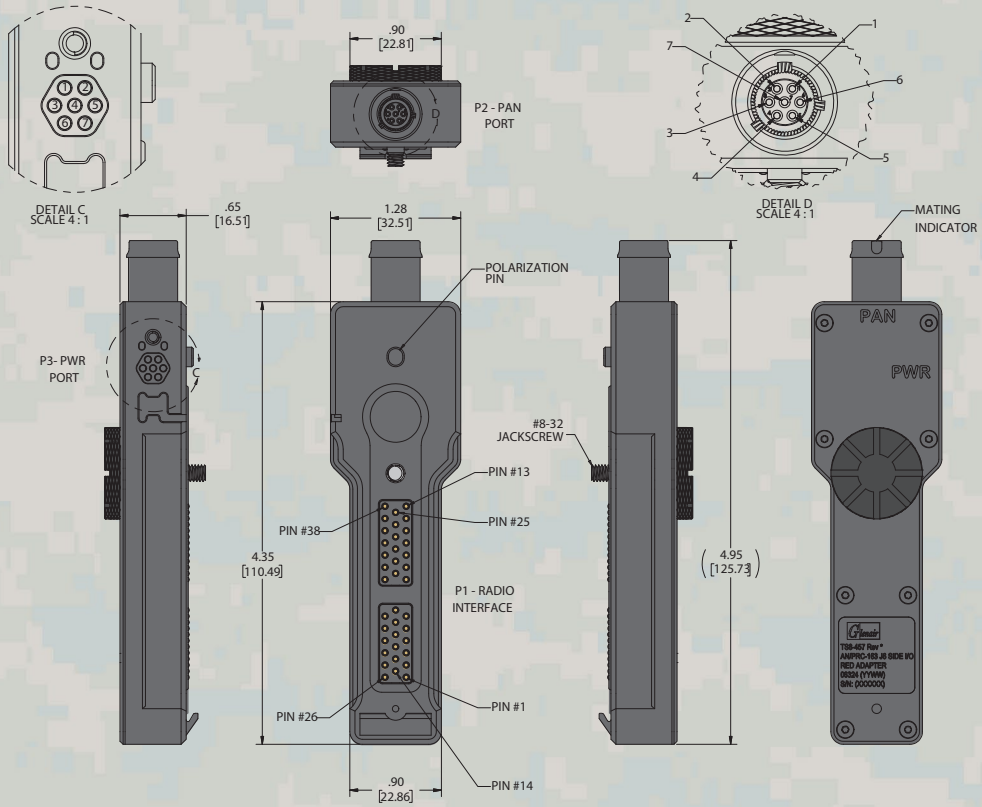

 © 2024 Glenair, Inc • 1211 Air Way, Glendale, CA 91201 • 818-247-6000 • www.glenair.com • U.S. CAGE code 06324 • STAR-PAN™ Tactical Interconnect Solutions
Dimensions are subject to change without notice.

BATTLE-TESTED

STAR-PAN™

Power cables and battery adapters

TS8-458 AN/PRC-163 Radio Battery Adapter, Black I/O

RADIO

AN/PRC-163
Radio Adapter, Black I/O

STAR-PAN™

QUALIFIED FOR USE WITH ALL STAR-PAN POWER / DATA HUBS

LIGHT, II, IV, AND VI

HUB PORT DESIGNATOR:

RADIO

RADIO POWER BOOST

SPECIFICATIONS

- For interconnection of referenced hand-held radio type to STAR-PAN power / data hubs
- Black stainless steel thumbscrew
- Mighty Mouse 807 (NATO standard) connectors
- Weight: (consult factory)
- Black I/O connection
- Export classification: ECCN 3A611.x

HOW TO ORDER

Sample Part Number:	**TS8-458**
Adapter Series	AN/PRC-163 Radio Adapter, black I/O

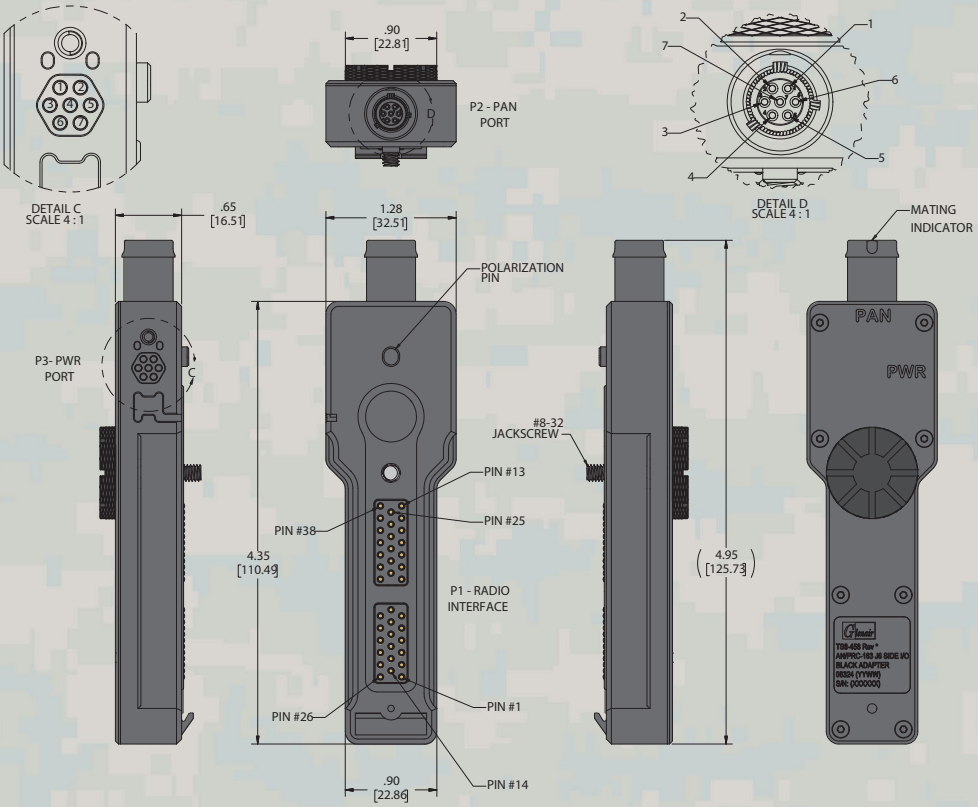

Dimensions are subject to change without notice.

BATTLE-TESTED

STAR-PAN™

Radio cables and adapters

TS8-495 AN/PRC-163 Radio Adapter, with Red/Black Switch

AN/PRC-163
Radio Adapter
Red/Black I/O switch

SPECIFICATIONS

- For interconnection of referenced radio type to STAR-PAN power / data hubs
- Mighty Mouse 807 (NATO standard) connectors
- Weight: (consult factory)
- Dual I/O USB selection switch
- Export classification: ECCN 3A611.x

HOW TO ORDER	
Sample Part Number:	**TS8-495**
Adapter Series	AN/PRC-163 Radio Adapter with red/black switch

QUALIFIED FOR USE WITH ALL STAR-PAN POWER / DATA HUBS

LIGHT, II, IV, AND VI

HUB PORT DESIGNATOR:

RADIO

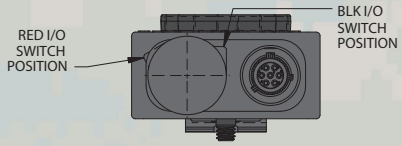

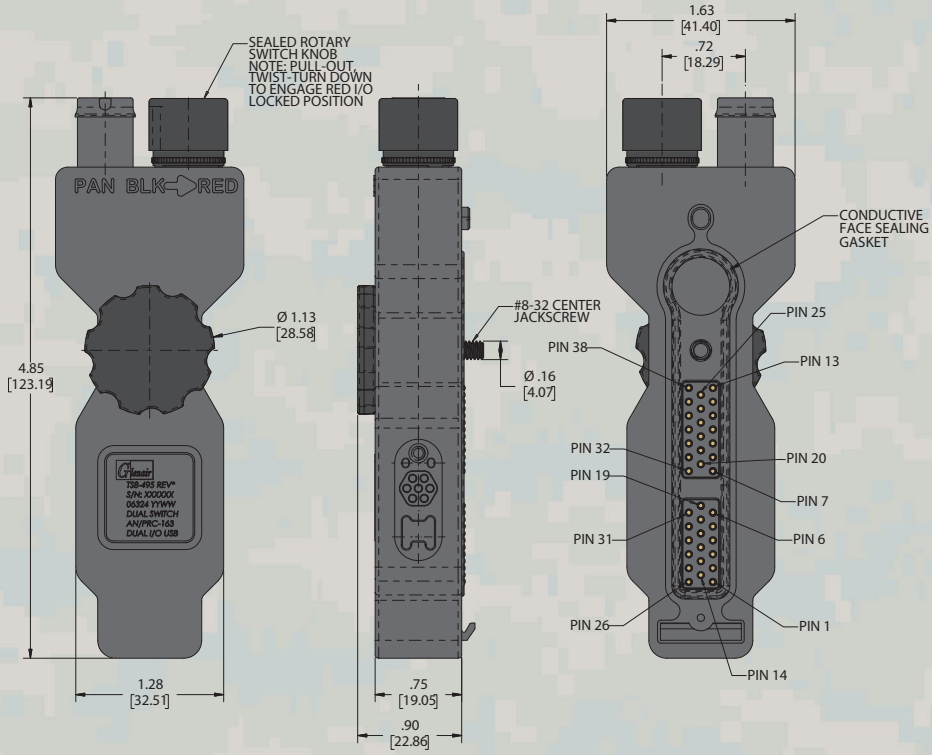

 © 2024 Glenair, Inc • 1211 Air Way, Glendale, CA 91201 • 818-247-6000 • www.glenair.com • U.S. CAGE code 06324 • STAR-PAN™ Tactical Interconnect Solutions
Dimensions are subject to change without notice.

BATTLE-TESTED

STAR-PAN™

Radio cables and adapters

TS8-411 AN/PRC-167 Multi-Function I/O (MFI) Cable

RADIO

AN/PRC-167 Radio (alt. use with PRC-163)

MFI (Multi-Function I/O) cable

SPECIFICATIONS

- For interconnection of referenced radio type to STAR-PAN power / data hubs
- Santoprene jacketed cable, black
- Ergonomic overmolding
- Mighty Mouse 807 (NATO standard) connector and P1 radio connector
- Weight, 18" cable: (consult factory)
- Export classification: ECCN 3A611.x

HOW TO ORDER

Sample Part Number:	**TS8-411**	**-22**
Cable Series	AN/PRC-167 MFI cable	
Length Designator	In inches **Omit for default length of 18.00"**	

STAR-PAN™

QUALIFIED FOR USE WITH ALL STAR-PAN POWER / DATA HUBS

LIGHT, II, IV, AND VI

HUB PORT DESIGNATOR:

RADIO

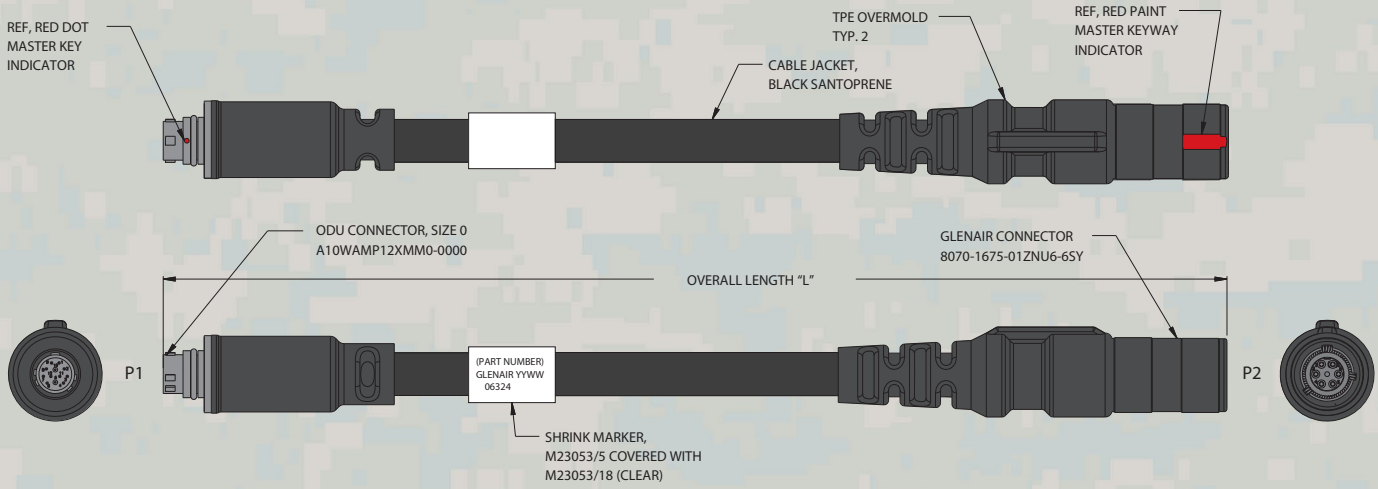

Dimensions are subject to change without notice.

BATTLE-TESTED

STAR-PAN™

Radio cables and adapters

808-132 Elbit PNR 1000 Radio Adapter

Elbit PNR 1000 Radio Adapter

SPECIFICATIONS

- For interconnection of referenced hand-held radio type to STAR-PAN power / data hubs
- Santoprene jacketed cable, black
- Ergonomic overmolding
- Glenair environmental heat-shrink boot seals radio connector to cable
- Mighty Mouse 807 (NATO standard) connector.
- Weight, 21" cable: 80g
- Export classification: ECCN 3A611.x

HOW TO ORDER

Sample Part Number:	**808-132**	**-24**
Cable Series	PNR 1000 Radio Adapter Cable	
Length Designator	In inches **Omit for default length of 21.00"**	

QUALIFIED FOR USE WITH ALL STAR-PAN POWER / DATA HUBS

LIGHT, II, IV, AND VI

HUB PORT DESIGNATOR:

RADIO

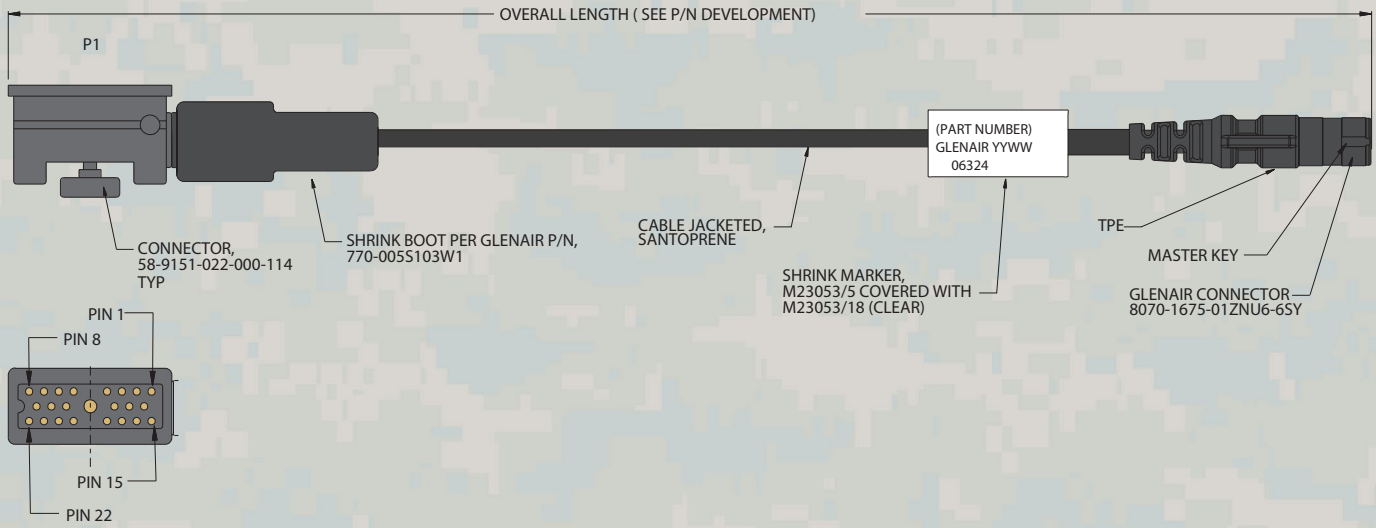

 © 2024 Glenair, Inc • 1211 Air Way, Glendale, CA 91201 • 818-247-6000 • www.glenair.com • U.S. CAGE code 06324 • STAR-PAN™ Tactical Interconnect Solutions
Dimensions are subject to change without notice.

BATTLE-TESTED

STAR-PAN™

Radio cables and adapters

TS8-470 Elbit PNR 1000 Radio Adapter

RADIO

Elbit PNR 1000 Radio Adapter

SPECIFICATIONS

- For interconnection of referenced hand-held radio type to STAR-PAN power / data hubs
- Black zinc-nickel finish
- Weight: (consult factory)
- Mighty Mouse 807 (NATO standard) connector.
- Export classification: ECCN 3A611.x

HOW TO ORDER

Sample Part Number:	**TS8-470**
Adapter Series	PNR 1000 Radio Adapter Cable

STAR-PAN™

QUALIFIED FOR USE WITH ALL STAR-PAN POWER / DATA HUBS

LIGHT, II, IV, AND VI

HUB PORT DESIGNATOR:

RADIO

RADIO POWER BOOST

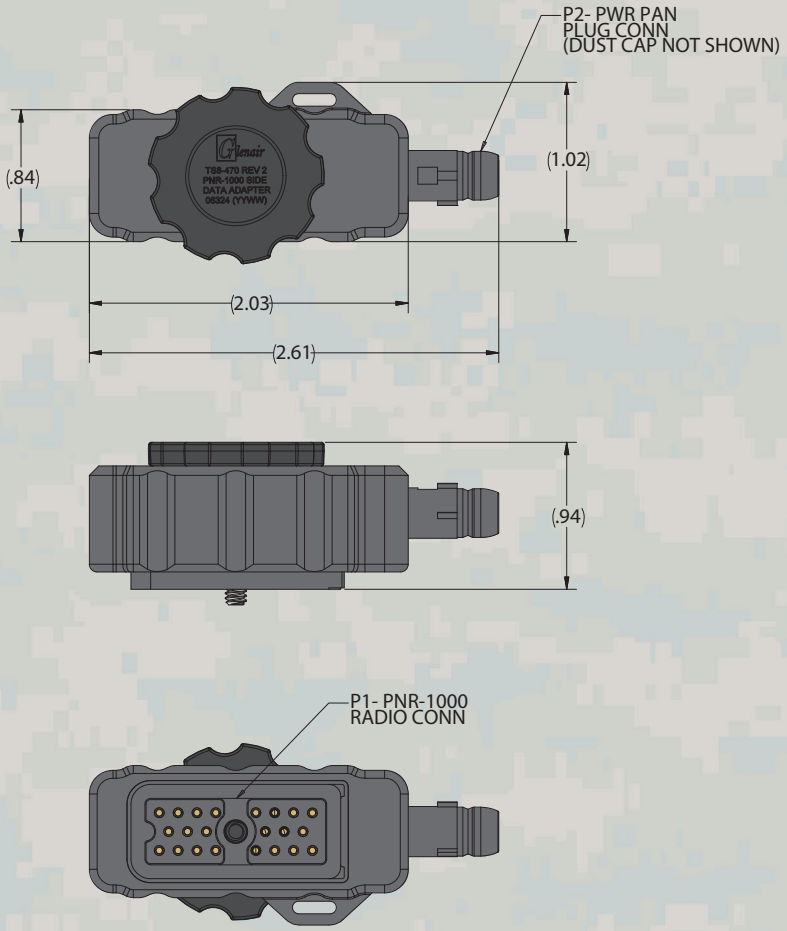

Dimensions are subject to change without notice.

BATTLE-TESTED

STAR-PAN™

Radio cables and adapters

TS8-446 Harris RF-7850S-TR Radio Cable

Harris RF-7850S-TR Radio Cable

SPECIFICATIONS

- For interconnection of referenced hand-held radio type to STAR-PAN power / data hubs
- Santoprene jacketed cable, black
- Ergonomic overmolding
- Mighty Mouse 807 (NATO standard) plug connector and J4 Radio connector with backshell
- Weight, 19" cable: 75g
- Export classification: ECCN 3A611.x

HOW TO ORDER

Sample Part Number:	**TS8-446**	**-20**
Cable Series	RF-7580S-TR Radio Adapter Cable	
Length Designator	In inches **Omit for default length of 19.00"**	

QUALIFIED FOR USE WITH ALL STAR-PAN POWER / DATA HUBS

LIGHT, II, IV, AND VI

HUB PORT DESIGNATOR:

PAN

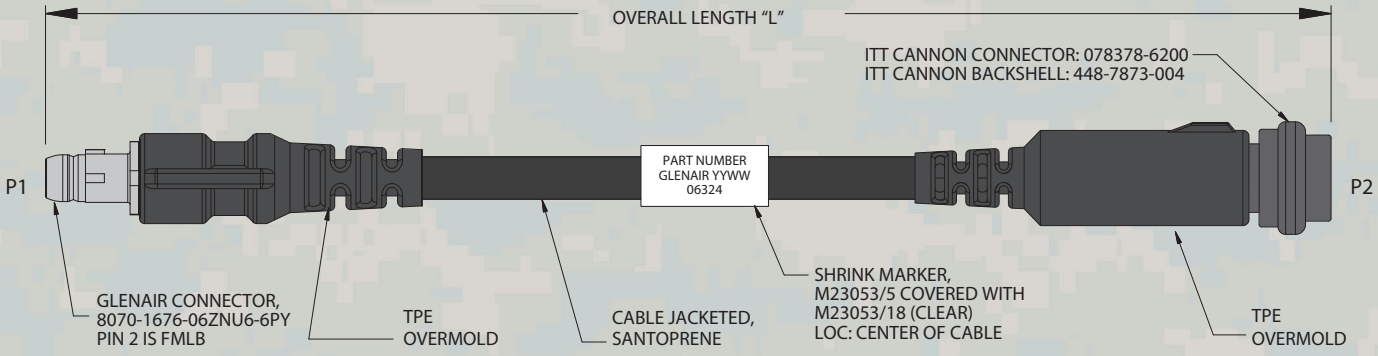

 © 2024 Glenair, Inc • 1211 Air Way, Glendale, CA 91201 • 818-247-6000 • www.glenair.com • U.S. CAGE code 06324 • STAR-PAN™ Tactical Interconnect Solutions
Dimensions are subject to change without notice.

BATTLE-TESTED

STAR-PAN™

Radio cables and adapters

808-257 Harris RF-7800S Radio Cable

RADIO

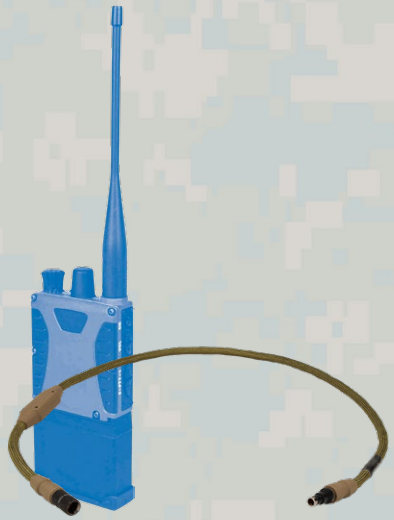

Harris RF-7800S Radio Cable

SPECIFICATIONS

- For interconnection of referenced hand-held radio type to STAR-PAN power / data hubs
- Nomex® braided wire protection, olive drab. Consult factory for other cable finish options
- Overmolded, ergonomic connector strain reliefs, desert tan
- Mighty Mouse 807 (NATO standard) connector and J4 Radio connector.
- Weight, 32" cable: (consult factory)
- Export classification: ECCN 3A611.x

HOW TO ORDER

Sample Part Number:	**808-257**	**-36**
Cable Series	RF7800S Radio Adapter Cable	
Length Designator	In inches **Omit for default length of 32.00"**	

STAR-PAN™

QUALIFIED FOR USE WITH ALL STAR-PAN POWER / DATA HUBS

LIGHT, II, IV, AND VI

HUB PORT DESIGNATOR:

RADIO

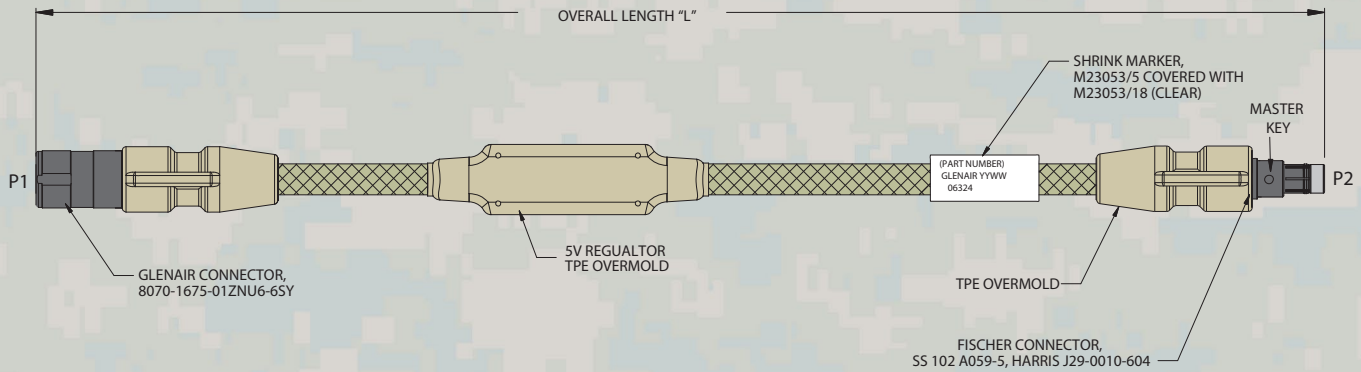

Dimensions are subject to change without notice.

BATTLE-TESTED

STAR-PAN™

Radio cables and adapters

808-148 Harris RF-7800S Radio Cable (Radio Host)

Harris RF-7800S Radio Cable

SPECIFICATIONS

- For interconnection of referenced hand-held radio type to End User Device
- Nomex® braided wire protection, olive drab. Consult factory for other cable finish options
- Overmolded, ergonomic connector strain reliefs, desert tan
- Mighty Mouse 807 (NATO standard) connector and J4 Radio connector.
- Weight, 32" cable: 74g
- Export classification: ECCN 3A611.x
- Radio acts as USB host

HOW TO ORDER

Sample Part Number:	**808-148**	**-36**
Cable Series	RF7800S Radio Adapter Cable	
Length Designator	In inches **Omit for default length of 32.00"**	

QUALIFIED FOR USE WITH ALL STAR-PAN POWER / DATA HUBS

LIGHT, II, IV, AND VI

HUB PORT DESIGNATOR:

RADIO

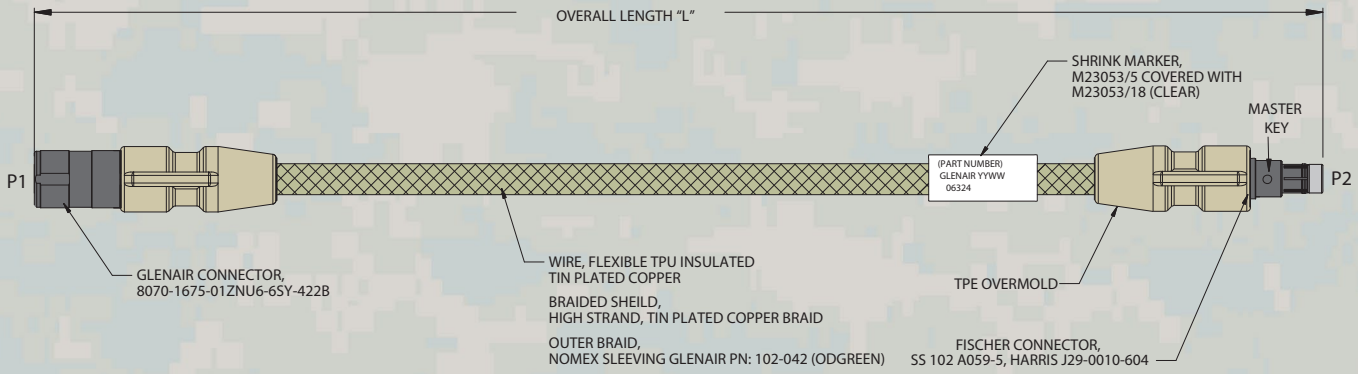

 © 2024 Glenair, Inc • 1211 Air Way, Glendale, CA 91201 • 818-247-6000 • www.glenair.com • U.S. CAGE code 06324 • STAR-PAN™ Tactical Interconnect Solutions
Dimensions are subject to change without notice.

BATTLE-TESTED

STAR-PAN™

Radio cables and adapters

TS8-466 Harris RF-7800S-TR Radio Cable, PAN port connection

RADIO

Harris RF-7800S Radio Cable

SPECIFICATIONS

- For interconnection of referenced hand-held radio type to STAR-PAN power / data hubs
- Nomex® braided wire protection, olive drab.
- Overmolded, ergonomic connector strain reliefs, desert tan
- Mighty Mouse 807 (NATO standard) and J4 Radio connectors
- Weight: (consult factory)
- Export classification: ECCN 3A611.x

HOW TO ORDER

Sample Part Number:	**TS8-466**	**-36**
Cable Series	RF7800S-TR Radio Adapter Cable	
Length Designator	In inches **Omit for default length of 32.00"**	

STAR-PAN™

QUALIFIED FOR USE WITH ALL STAR-PAN POWER / DATA HUBS

LIGHT, II, IV, AND VI

HUB PORT DESIGNATOR:

PAN

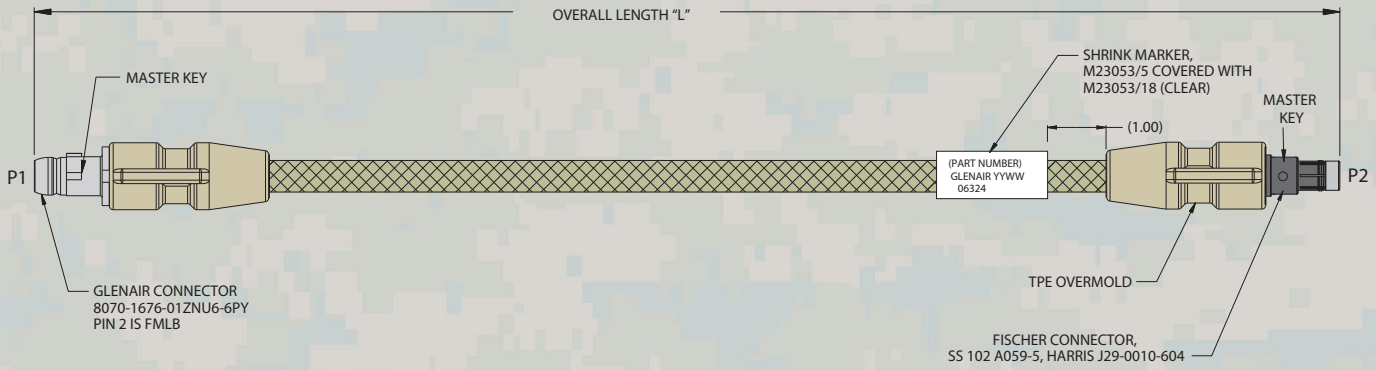

Dimensions are subject to change without notice.

BATTLE-TESTED

STAR-PAN™

Radio cables and adapters

TS8-426 Harris RF-7850M Sync Serial Adapter

Harris RF-7850M Sync Serial Adapter

SPECIFICATIONS

- For interconnection of referenced hand-held radio type to STAR-PAN power / data hubs
- Aluminum housing, black zinc-nickel finish
- Black stainless steel thumbscrew
- Mighty Mouse 807 (NATO standard) connectors
- Weight 91g
- Export classification: ECCN 3A611.x

HOW TO ORDER	
Sample Part Number:	**TS8-426**
Adapter Series	RF-7850M Sync Serial Adapter

QUALIFIED FOR USE WITH ALL STAR-PAN POWER / DATA HUBS

LIGHT, II, IV, AND VI

HUB PORT DESIGNATOR:

RADIO

RADIO POWER BOOST

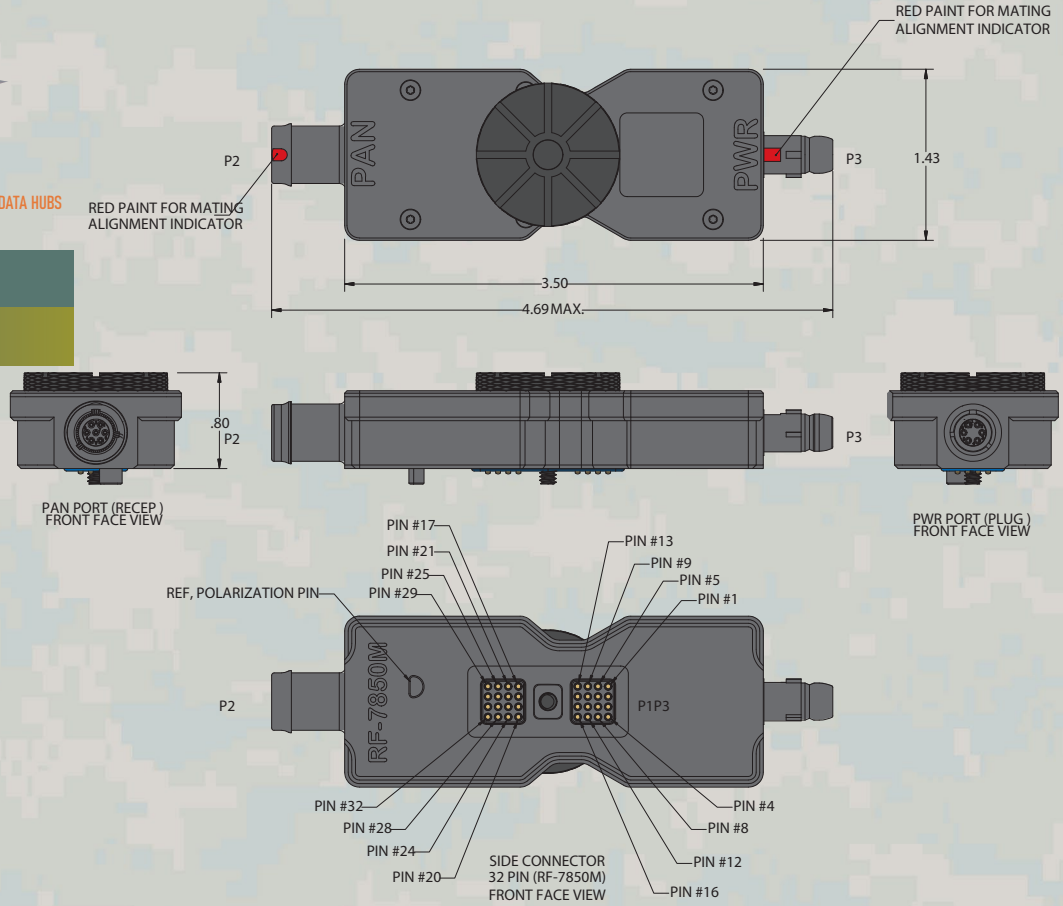

 © 2024 Glenair, Inc • 1211 Air Way, Glendale, CA 91201 • 818-247-6000 • www.glenair.com • U.S. CAGE code 06324 • STAR-PAN™ Tactical Interconnect Solutions
Dimensions are subject to change without notice.

BATTLE-TESTED

STAR-PAN™

Radio cables and adapters

808-044 Raytheon RT-1922 Microlight SADL Radio Cable

RADIO

Raytheon RT-1922 Microlight Situational Awareness Data Link (SADL) Radio Cable

SPECIFICATIONS

- For interconnection of referenced hand-held radio type to STAR-PAN power / data hubs
- Nomex® braided wire protection, olive drab. Consult factory for other cable finish options
- Overmolded, ergonomic connector strain reliefs, desert tan
- Mighty Mouse 807 (NATO standard) connectors
- Weight, 24" cable: 60g
- Export classification: ECCN 3A611.x

HOW TO ORDER

Sample Part Number:	**808-044**	**-U**	**-28**
Cable Series	RT-1922 Microlight SADL Radio Cable		
U-Bend Option	**U** = with "U" bend- Omit for straight		
Length Designator	In inches **Omit for default length of 24.00"**		

STAR-PAN™

QUALIFIED FOR USE WITH ALL STAR-PAN POWER / DATA HUBS

LIGHT, II, IV, AND VI

HUB PORT DESIGNATOR:

RADIO

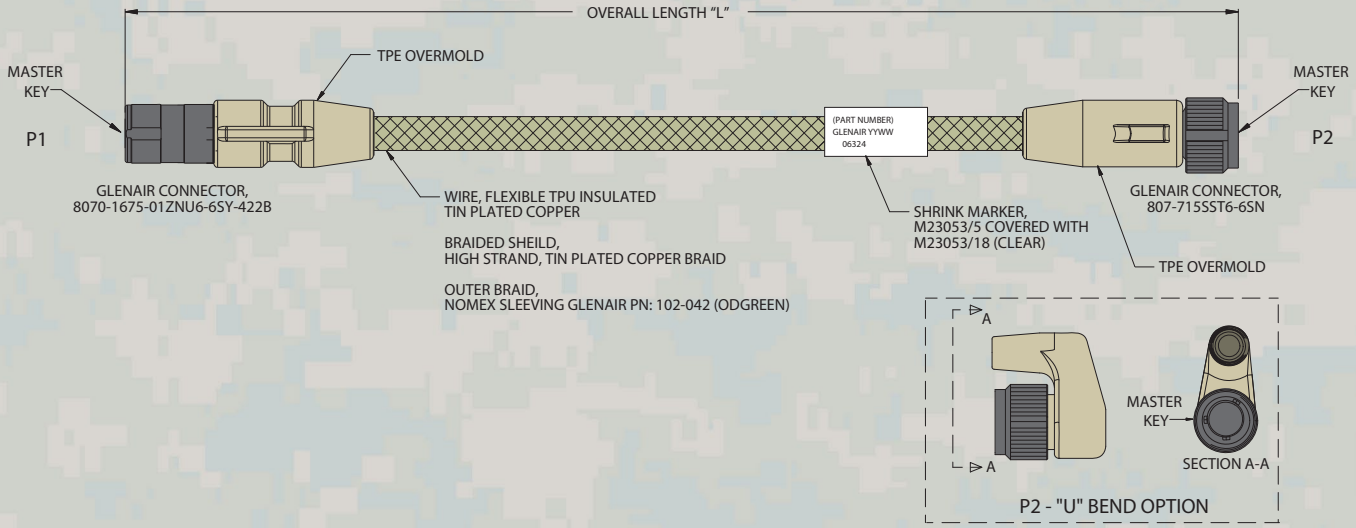

Dimensions are subject to change without notice.

BATTLE-TESTED

STAR-PAN™

Radio cables and adapters

TS3-009 Thales PR4G Radio Ethernet Cable

Thales PR4G Radio Cable

SPECIFICATIONS

- For interconnection of referenced radio type to STAR-PAN power / data hubs
- Santoprene jacketed cable, black
- Ergonomic overmolding
- Mighty Mouse 807 (NATO standard) connector and J4 Radio connector
- Weight: (consult factory)
- Export classification: ECCN 3A611.x

HOW TO ORDER

Sample Part Number:	**TS3-009**	**-30**
Cable Series	Thales PR4G Radio Ethernet Cable	
Length Designator	In inches **Omit for default length of 24.00"**	

QUALIFIED FOR USE WITH ALL STAR-PAN POWER / DATA HUBS

LIGHT, II, IV, AND VI

HUB PORT DESIGNATOR:

PAN

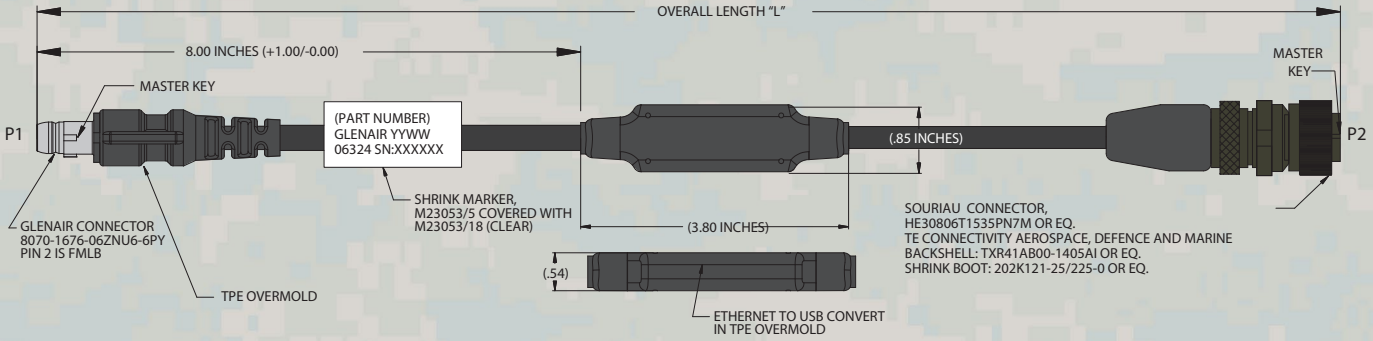

 © 2024 Glenair, Inc • 1211 Air Way, Glendale, CA 91201 • 818-247-6000 • www.glenair.com • U.S. CAGE code 06324 • STAR-PAN™ Tactical Interconnect Solutions
Dimensions are subject to change without notice.

BATTLE-TESTED

STAR-PAN™

Radio cables and adapters

TS3-016 TrellisWare TW-950 TSM Shadow Radio Adapter

RADIO

TrellisWare TSM Shadow Radio Adapter

SPECIFICATIONS

- For interconnection of referenced radio type to STAR-PAN power / data hubs
- Black zinc-nickel finish
- Mighty Mouse 807 (NATO standard) connector
- Weight: (consult factory)
- Export classification: EAR99

HOW TO ORDER

Sample Part Number:	**TS3-016**
Adapter Series	TrellisWare TS-950 TSM Shadow radio adapter♥

RADIO CABLES AND ADAPTERS

QUALIFIED FOR USE WITH ALL STAR-PAN POWER / DATA HUBS

LIGHT, II, IV, AND VI

HUB PORT DESIGNATOR:

RADIO

RADIO POWER BOOST

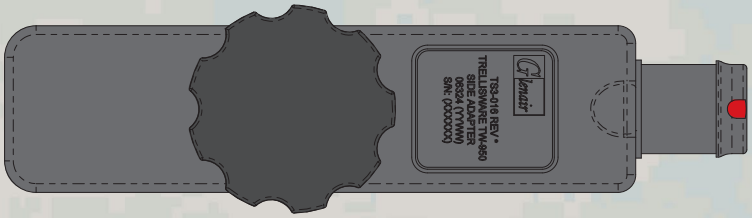

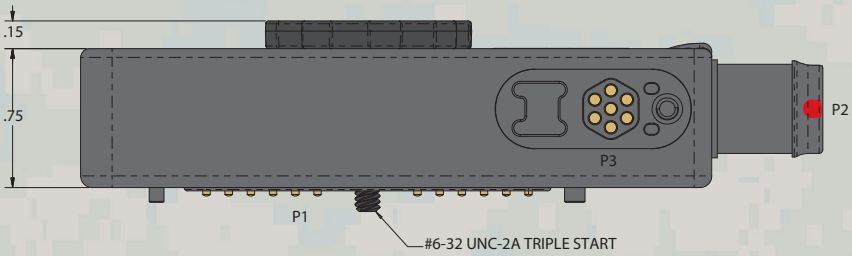

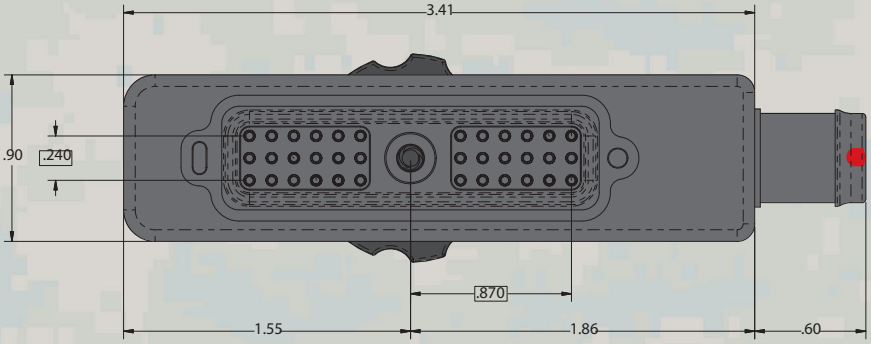

Dimensions are subject to change without notice.

BATTLE-TESTED

STAR-PAN™

Radio cables and adapters

TS8-486 TrellisWare TW-950 TSM Shadow Radio Power Booster

SPECIFICATIONS

- Black zinc-nickel finish
- Weight: (consult factory)
- Export classification: ECCN 3A611.x
- Assembly supplied with TS1-094 cable

HOW TO ORDER	
Sample Part Number:	**TS8-486**
Adapter Series	TrellisWare Radio Power Booster

QUALIFIED FOR USE WITH ALL STAR-PAN POWER / DATA HUBS

LIGHT, II, IV, AND VI

HUB PORT DESIGNATOR:

RADIO

RADIO POWER BOOST

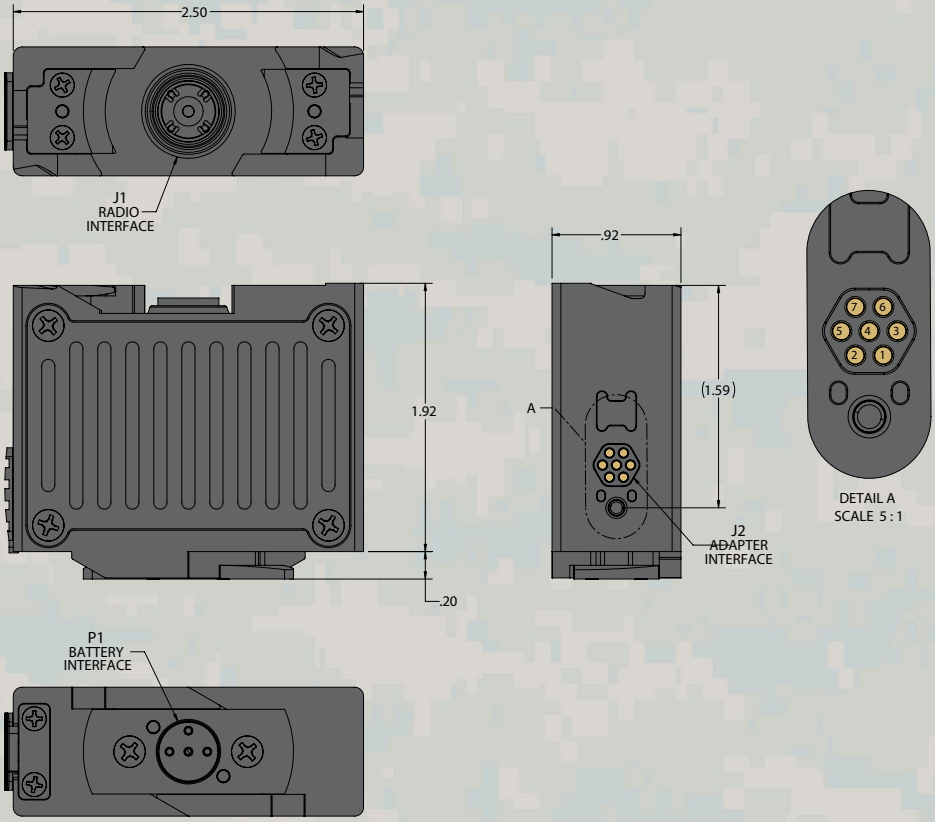

© 2024 Glenair, Inc • 1211 Air Way, Glendale, CA 91201 • 818-247-6000 • www.glenair.com • U.S. CAGE code 06324 • STAR-PAN™ Tactical Interconnect Solutions
Dimensions are subject to change without notice.

BATTLE-TESTED

STAR-PAN™

Radio cables and adapters

TS1-094 Cable for use with TS8-486 Power Booster

RADIO

RADIO CABLES AND ADAPTERS

SPECIFICATIONS

- Black overmolded cable
- Black zinc-nickel finish housings
- Weight: (consult factory)
- Export classification: EAR99

HOW TO ORDER	
Sample Part Number:	**TS1-094**
Adapter Series	Cable for use with RPB TS8-486

STAR-PAN™

QUALIFIED FOR USE WITH ALL STAR-PAN POWER / DATA HUBS

LIGHT, II, IV, AND VI

HUB PORT DESIGNATOR:

RADIO

RADIO POWER BOOST

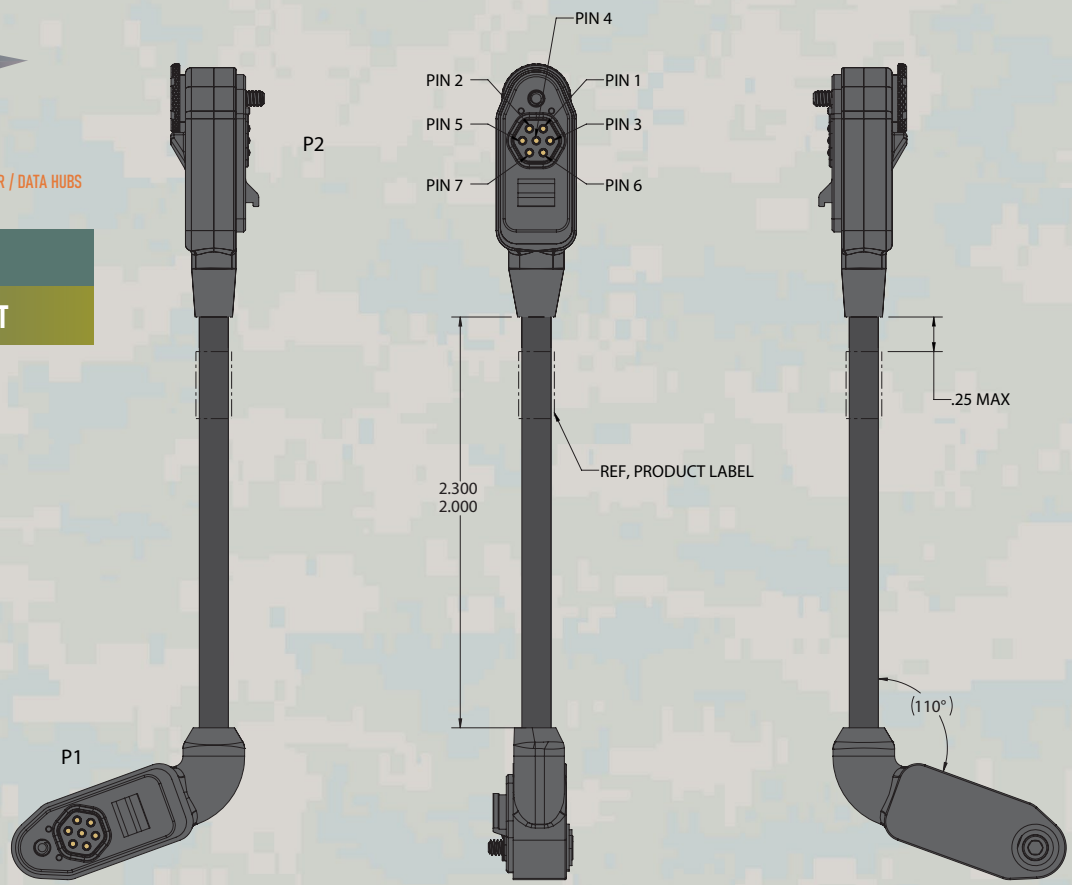

Dimensions are subject to change without notice.

BATTLE-TESTED

STAR-PAN™

Radio cables and adapters

TS1-003 Silvus SC4200 Data Cable

Silvus SC4200 Radio Cable

SPECIFICATIONS

- For interconnection of referenced radio type to STAR-PAN power / data hubs
- Santoprene jacketed cable, black
- Ergonomic overmolding
- Mighty Mouse 807 (NATO standard) connector and J4 Radio connector
- Weight: (consult factory)
- Export classification: EAR99

HOW TO ORDER

Sample Part Number:	**TS1-003**	**-30**
Cable Series	Silvus SC4200 Radio Data Cable	
Length Designator	In inches **Omit for default length of 24.00"**	

QUALIFIED FOR USE WITH ALL STAR-PAN POWER / DATA HUBS

LIGHT, II, IV, AND VI

HUB PORT DESIGNATOR:

AUX

RADIO POWER BOOST

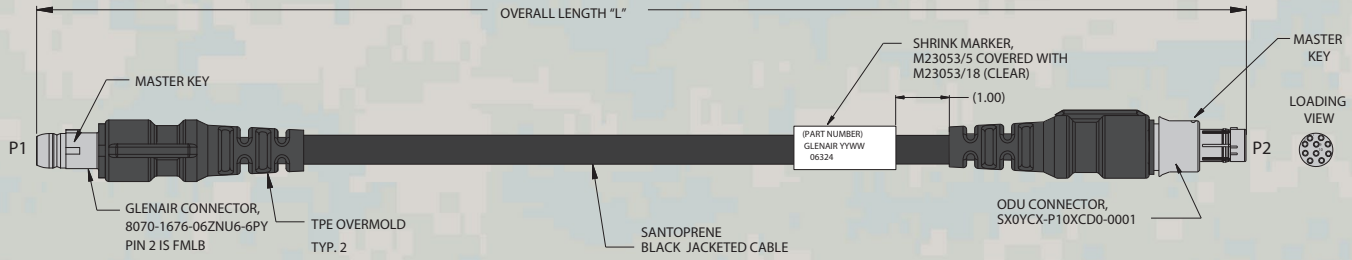

 © 2024 Glenair, Inc • 1211 Air Way, Glendale, CA 91201 • 818-247-6000 • www.glenair.com • U.S. CAGE code 06324 • STAR-PAN™ Tactical Interconnect Solutions
Dimensions are subject to change without notice.

BATTLE-TESTED

STAR-PAN™

Radio cables and adapters

TS8-539 MPU5 Ethernet Cable

RADIO

SPECIFICATIONS

- For interconnection of referenced radio type to STAR-PAN power / data hubs
- Santoprene jacketed cable, black
- Ergonomic TPU overmolding
- Mighty Mouse 807 (NATO standard) connector and radio connector assembly
- Weight: (consult factory)
- Export classification: ECCN 3A611.x

HOW TO ORDER

Sample Part Number:	**TS8-539**	**-30**
Cable Series	MPU5 Ethernet cable	
Length Designator	In inches. 90" max. **Omit for default length of 90.00"**	

QUALIFIED FOR USE WITH ALL STAR-PAN POWER / DATA HUBS

LIGHT, II, IV, AND VI

HUB PORT DESIGNATOR:

RADIO

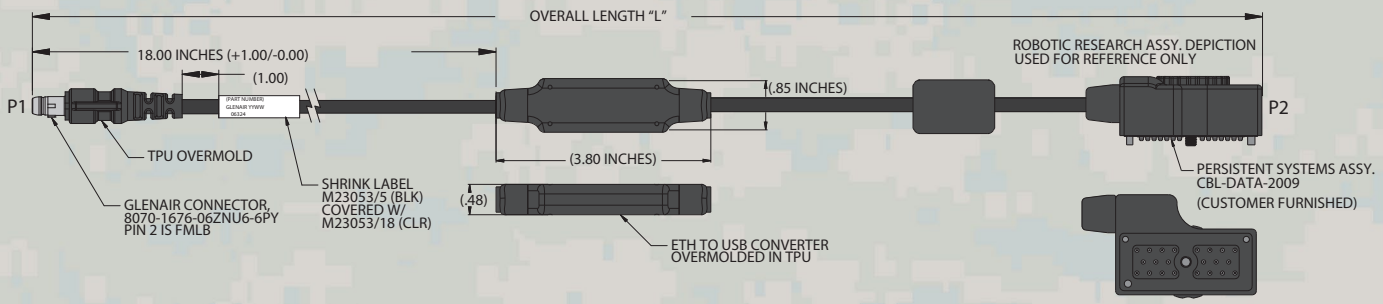

Dimensions are subject to change without notice.

BATTLE-TESTED

STAR-PAN™

Radio cables and adapters

TS8-544 MPU5 Ethernet Cable with Radio Power Boost option

SPECIFICATIONS

- For interconnection of referenced radio type to STAR-PAN power / data hubs
- Santoprene jacketed cable, black
- Ergonomic TPE overmolding
- Mighty Mouse 807 (NATO standard) connector, URPB connector, and radio connector assembly
- Weight: (consult factory)
- Export classification: ECCN 3A611.x

HOW TO ORDER

Sample Part Number:	**TS8-544**	**-24**
Cable Series	MPU5 Ethernet cable with RPB	
Length Designator	In inches. 30" max. **Omit for default length of 30.00"**	

QUALIFIED FOR USE WITH ALL STAR-PAN POWER / DATA HUBS

LIGHT, II, IV, AND VI

HUB PORT DESIGNATOR:

RADIO

RADIO POWER BOOST

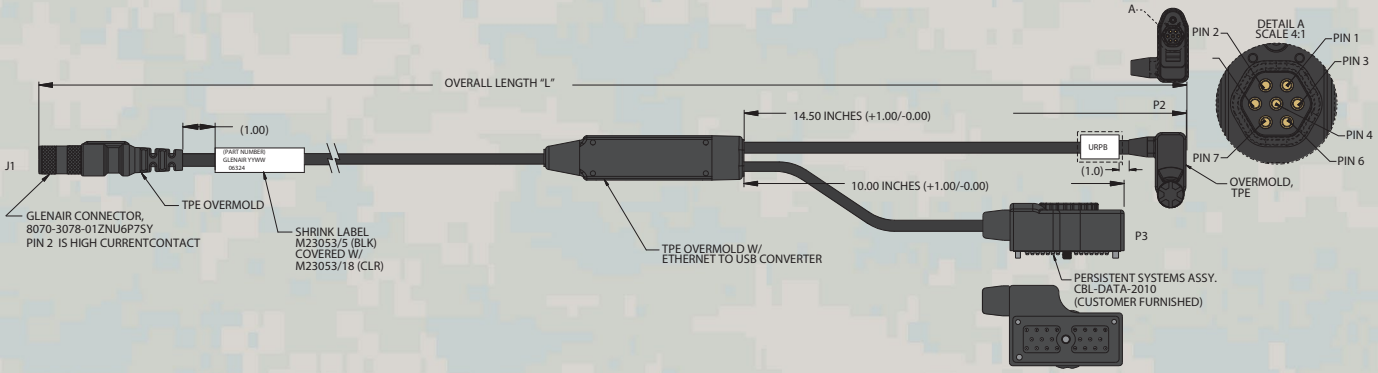

 © 2024 Glenair, Inc • 1211 Air Way, Glendale, CA 91201 • 818-247-6000 • www.glenair.com • U.S. CAGE code 06324 • STAR-PAN™ Tactical Interconnect Solutions
Dimensions are subject to change without notice.

BATTLE-TESTED

STAR-PAN™

Radio cables and adapters

TS8-435 AN/PRC-117G PAN Port Radio Cable

SPECIFICATIONS

- For interconnection of referenced man-pack radio type to STAR-PAN power / data hubs
- Nomex® braided wire protection, olive drab. Consult factory for other cable finish options
- Overmolded, ergonomic connector strain reliefs, desert tan
- Mighty Mouse 807 (NATO standard) connector and J4 Radio connector
- Weight, 32" cable: 90g
- Export classification: ECCN 3A611.x

HOW TO ORDER

Sample Part Number:	**TS8-435**	**-X**	**-XX**
Cable Series	AN/PRC-117G Radio Adapter Cable		
P2 End Option	**-R** = Right Angle **-U** = 180° **Omit** for straight (default)		
Length Designator	In inches (6.00" min.) **Omit for default length of 24.00"**		

QUALIFIED FOR USE WITH ALL STAR-PAN POWER / DATA HUBS
LIGHT, II, IV, AND VI

HUB PORT DESIGNATOR:
PAN

RADIO POWER BOOST

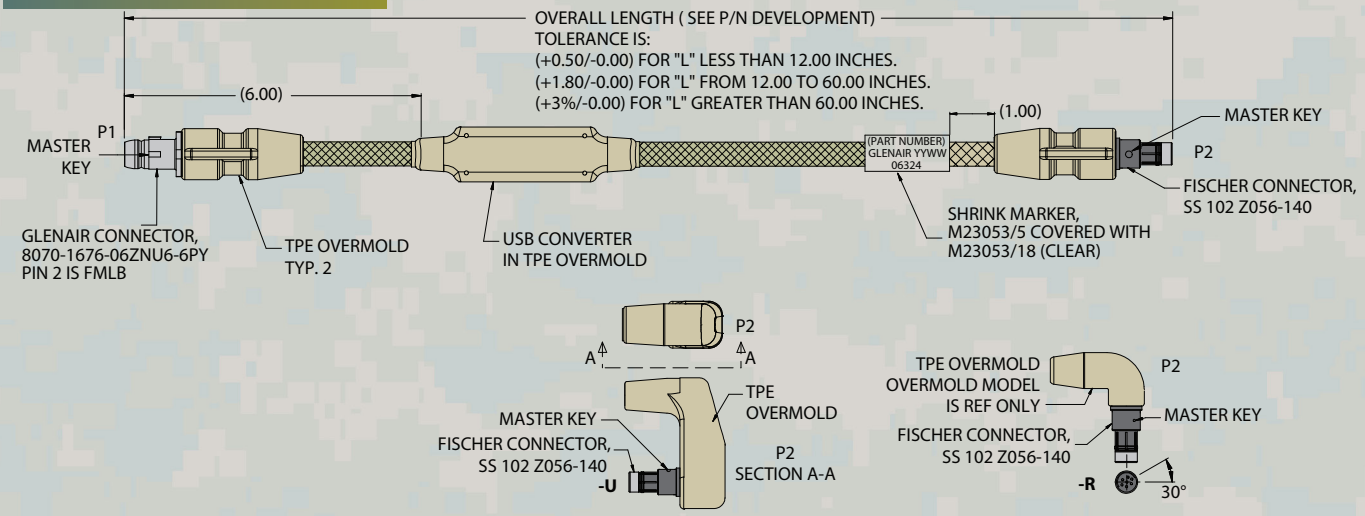

 © 2024 Glenair, Inc • 1211 Air Way, Glendale, CA 91201 • 818-247-6000 • www.glenair.com • U.S. CAGE code 06324 • STAR-PAN™ Tactical Interconnect Solutions
Dimensions are subject to change without notice.

BATTLE-TESTED

STAR-PAN™

Radio cables and adapters

TS8-512 PRC 152 Sync Serial Connector Assembly

RADIO

SPECIFICATIONS

- For interconnection of referenced hand-held radio type to STAR-PAN power / data hubs
- Aluminum housing, black zinc-nickel finish
- Black stainless steel thumbscrew
- Mighty Mouse 807 (NATO standard) connectors
- Weight 91g
- Export classification: ECCN 3A611.x
- Adapter Cable 808-047 sold separately

HOW TO ORDER

Sample Part Number:	**TS8-512**
Adapter Series	PRC 152 Sync Serial Connector Assembly

STAR-PAN™

STAR-PAN™

QUALIFIED FOR USE WITH ALL STAR-PAN POWER / DATA HUBS

LIGHT, II, IV, AND VI

QUALIFIED FOR USE WITH ALL STAR-PAN POWER / DATA HUBS

LIGHT, II, IV, AND VI

HUB PORT DESIGNATOR:

RADIO

RADIO POWER BOOST

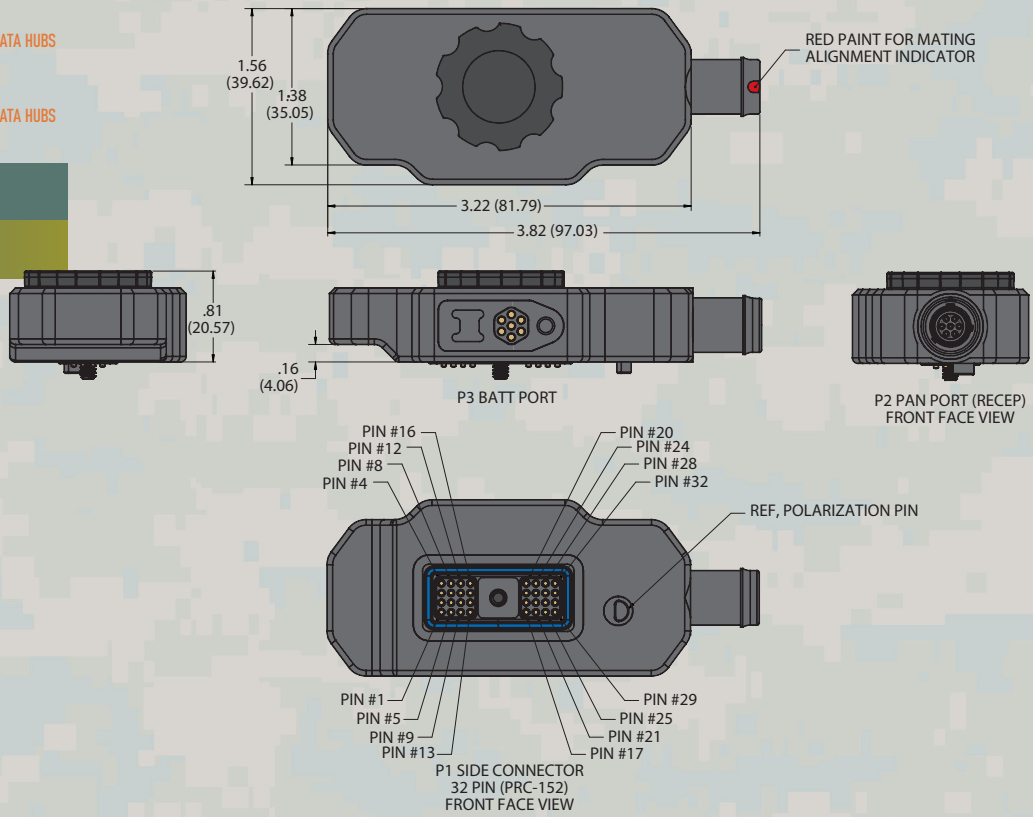

BATTLE-TESTED

STAR-PAN™

Radio cables and adapters

TS8-516 AN/PRC 152/152A Sync Serial Adapter

SPECIFICATIONS

- For interconnection of referenced hand-held radio type to STAR-PAN power / data hubs
- Aluminum housing, black zinc-nickel finish
- Black stainless steel thumbscrew
- Mighty Mouse 807 (NATO standard) connectors
- Weight 91g
- Export classification: ECCN 3A611.x
- Adapter Cable 808-047 sold separately

HOW TO ORDER	
Sample Part Number:	**TS8-516**
Adapter Series	AN/PRC-152/152A Sync Serial Adapter

QUALIFIED FOR USE WITH ALL STAR-PAN POWER / DATA HUBS

LIGHT, II, IV, AND VI

HUB PORT DESIGNATOR:

RADIO

RADIO POWER BOOST

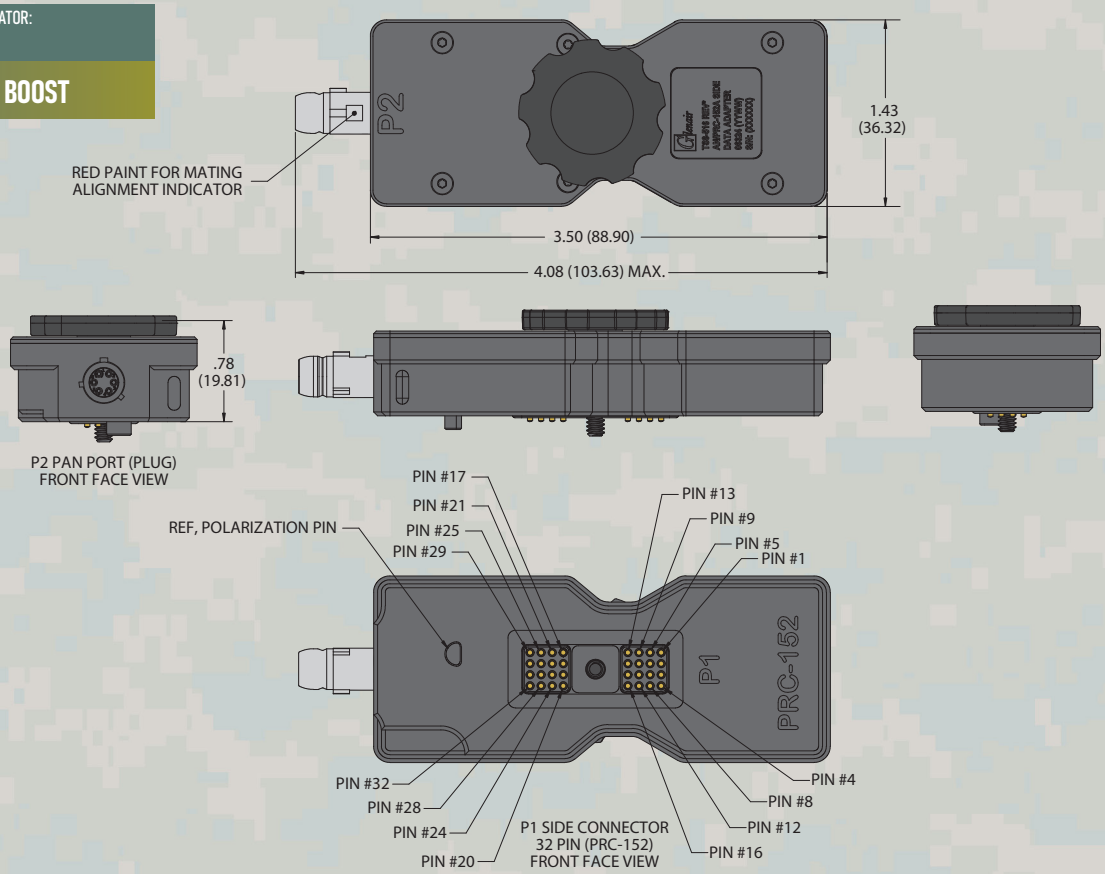

 © 2024 Glenair, Inc • 1211 Air Way, Glendale, CA 91201 • 818-247-6000 • www.glenair.com • U.S. CAGE code 06324 • STAR-PAN™ Tactical Interconnect Solutions
Dimensions are subject to change without notice.