Glenair®







RUGGEDIZED RJ45 AND USB

SUPERSEAL™

CONNECTORS AND ACCESSORIES

IAW: MIL-DTL-38999 • MIL-DTL-5015 • MIL-DTL-26482 • MIL-DTL-28840 • SR. 80 MIGHTY MOUSE

MAY 2016

RUGGEDIZED
RJ45 AND USB
CONNECTORS

SUPERSEAL™

CONNECTORS AND ACCESSORIES

RJ45/USB SUPER SEAL™

Glenair supplies the world's most comprehensive line of ruggedized, field RJ45 Ethernet and USB connectors. The entire series is optimized for high-speed RJ45 and USB protocol applications in industrial and military environments such as rail, naval, shipboard, and soldier-system communications. SuperSeal™ enables commercial standard RJ45 and USB connectors to perform their important connectivity functions in mil-spec application environments requiring higher levels of sealing, grounding, durability, and higher-performance cable and board termination options.









SuperSeal™ Advantages

- Superior sealing— IP67 unmated and IP68 when mated—for complete system protection against water, sand and dust
- Shielded/grounded receptacle connectors
- Crimp, solder-cup, PC tail, and Quadrax contact/wire termination options
- USB 2.0 standard Type A, RJ45 Cat 5e and RJ12 with plug/jack or jack/jack interface options
- The industry's widest range of packaging options including Mil-DTL Type and Glenair ultraminiature solutions

© 2016 Glenair, Inc • 1211 Air Way, Glendale, CA 91201 • 818-247-6000 • www.glenair.com • U.S. CAGE code 06324 • SuperSeal™

38999 Type



5015 Intermountable



26482 Type







28840 Type

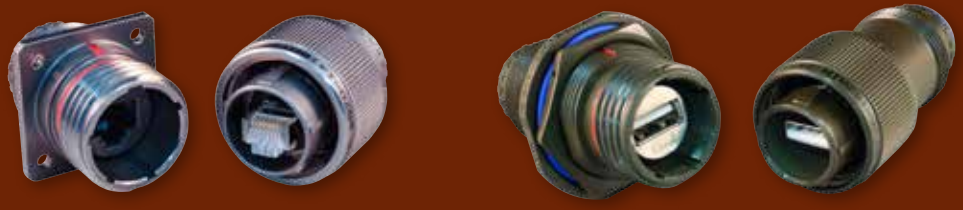

Series 80 Mighty Mouse



© 2016 Glenair, Inc • 1211 Air Way, Glendale, CA 91201 • 818-247-6000 • www.glenair.com • U.S. CAGE code 06324 • SuperSeal™

RJ45/USB
SUPER SEAL™



SUPERSEAL™

Ruggedized RJ45, USB, HDMI, and DisplayPort connectors for applications as diverse as military ground vehicles to passenger IFE

IP67 open-face, robust insert-to-shell grounding, complete range of wire, cable, and circuit board terminations

- **Superior sealing—IP67 unmated—for complete system protection against water, sand and dust**
- **Protocols available include: USB 2.0, 3.0, and 3.2 Gen 2; Cat 5e and 6a; HDMI 2.0; and DisplayPort 2**
- **Shielded/grounded coupler designs in both receptacle and plug connectors**
- **Crimp, solder-cup, PC tail, and Quadrax contact/wire termination options**
- **RJ45 plug and/or jack interface options MIL-DTL-38999 type versions intermateable with other RJ45 field-duty connectors**

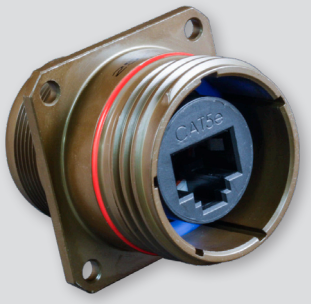

MIL-DTL-38999 Series III with sealed RJ45



MIL-DTL-38999 Series III with RJ45 USB cable assemblies



High-capacity, high-speed USB data stick

© 2016 Glenair, Inc • 1211 Air Way, Glendale, CA 91201 • 818-247-6000 • www.glenair.com • U.S. CAGE code 06324 • SuperSeal™ Catalog
Dimensions in Inches (millimeters) are subject to change without notice.

Rev. 11.14.23

Introduction and Technical Reference

SuperSeal connector overview

AVAILABLE TERMINATION OPTIONS

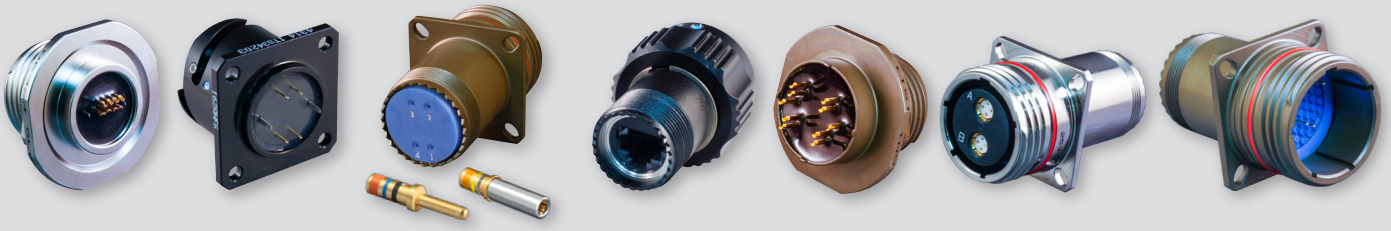

Solder Cup | PC tail | Crimp | Jack-to-Jack | EMI Filtered | Quadrax | MIL-STD-1560 Arrangements

EXPANDED PACKAGING OPTIONS



USB and RJ45 Cable Assemblies



IPT 26482 Type, RJ45 or USB 2.0 Plus ITS (5015 Intermountable), RJ45 Cat 5e or USB 2.0



Micro or Standard USB 2.0, 3.0, 3.2 gen 2 and RJ45 Mighty Mouse Plus 28840 RJ45 Cat 5e or USB 2.0

ACCESSORIES AND TOOLS



Flop Lids and covers



Adapters and Backshells



Tools

© 2016 Glenair, Inc • 1211 Air Way, Glendale, CA 91201 • 818-247-6000 • www.glenair.com • U.S. CAGE code 06324 • SuperSeal™ Catalog
Dimensions in Inches (millimeters) are subject to change without notice.

Rev. 11.14.23

Introduction and Technical Reference

Performance specifications for Cat 5e and 6A connectors

RJ45 Cat 5e and Cat 6A Performance Specifications			
Property	**MIL-DTL-38999 Series III Type**	**Series ITS 5015 Intermountable**	**Series IPT MIL-DTL-26482 Type**
Material and Finish			
Shell/Coupling and Plating	Complete list of options available in the Material and Finish Options portion of this section		
Contacts	PC tails, solder cup, and crimp contacts: copper alloy, gold plated		
RJ45 Insulator	PPS		
Grommet, Peripheral Seal, Interfacial Seal, O-ring	Blended fluorosilicone/silicone elastomer, 30% silicone per ZZ-R-765, 70% fluorosilicone per MIL-R-25988		
Shell Sizes	17 and 19	18	18
Shielding Sleeve	Material: Copper alloy Finish: Nickel		
Electrical Specifications			
Data Rate	Cat 5e, up to one Gigabit per second (Gbps) at 100 MHz up to 100 meters / 328 feet. Cat 6A, up to 10 Gigabit per second (10 Gbps) at 500 MHz up to 100 meters / 328 feet.		
Current Rating	1.5 Amps		
D.W.V.	1000 VDC (700 VAC)		
I.R.	500 Mega ohms @ 500 VDC		
Frequency	100 MHz (Cat 5e), 500 MHz (Cat 6A)		
Wiring	Straight through		
Cabling Length	Up to 100 meters or 100 meters max.		
Shield Continuity	Continuous through coupler or continuous coupler to shell		
Environmental/Mechanical Performance			
Sealing	IP68 mated condition, IP67 unmated condition		
Outgassing	**Mod Code 186S** meets outgassing requirements per ASTM E 595 and meets NASA level 3 screening for standard reliability **Mod Code 928** meets outgassing requirements per UL 94 V-0		
Operating Temperature	-40°C to +120°C		
Vibration	20g, 3 Axis, 10 - 2000Hz	15G sine 10Hz - 2000Hz	10G sine 10Hz - 2000Hz
Mechanical Shock	300 g's	50G - 11ms	50G - 11ms
Backshell Interface	MIL-DTL-38999, Designator H	Consult factory	
Mating System	Triple-start stub ACME	Reverse Bayonet	
Mating Cycles	500		

© 2016 Glenair, Inc • 1211 Air Way, Glendale, CA 91201 • 818-247-6000 • www.glenair.com • U.S. CAGE code 06324 • SuperSeal™ Catalog
Dimensions in Inches (millimeters) are subject to change without notice.

Introduction and Technical Reference

Performance specifications for Cat 5e and 6A connectors

RJ12 and RJ45 Cat 5e and Cat 6a Performance Specifications			
Property	**MIL-DTL-28840 Type (RJ12)**	**MIL-DTL-28840 Type (RJ45)**	**Series 801, 804 and 805 Mighty Mouse (RJ45)**
Material and Finish			
Shell/Coupling and Plating	Complete list of options available in the Material and Finish Options portion of this section		
Contacts	PC tails, solder cup, and crimp contacts: copper alloy, gold plated		
RJ45 Insulator	PPS		
Grommet, Peripheral Seal, Interfacial Seal, O-ring	Blended fluorosilicone/silicone elastomer, 30% silicone per ZZ-R-765, 70% fluorosilicone per MIL-R-25988		
Shell Sizes	15 and 17	17 and 19	Series 801 Shell Size 17 & 19 Series 804 Shell Size 15 & 16 Series 805 Shell Size 19 & 21
Shielding Sleeve	Material: Copper alloy Finish: Nickel		
Electrical Specifications			
Data Rate	NA	Cat 5e, up to one Gigabit per second (Gbps) at 100 MHz up to 100 meters / 328 feet. Cat 6A, up to 10 Gigabit per second (10 Gbps) at 500 MHz up to 100 meters / 328 feet.	
Current Rating	1.5 Amps		
D.W.V.	1000 VDC (700 VAC)		
I.R.	500 Mega ohms @ 500 VDC		
Frequency	300 Hz - 3.4 KHZ	100 MHz (Cat 5e), 500 MHz (Cat 6A)	
Wiring	Straight through		
Cabling Length	300 meters	Up to 100 meters or 100 meters max.	
Shield Continuity	Continuous through coupler or continuous coupler to shell		
Environmental/Mechanical Performance			
Sealing	IP68 mated condition, IP67 unmated condition		
Outgassing	**Mod Code 186S** meets outgassing requirements per ASTM E 595 and meets NASA level 3 screening for standard reliability **Mod Code 928** meets outgassing requirements per UL 94 V-0		
Operating Temperature	-40°C to +120°C		
Vibration	NA	20g, 3 Axis, 10 - 2000Hz	
Mechanical Shock	NA	300g's	
Backshell Interface	Consult factory	Consult factory	Dependent on Series
Mating System	Threaded	Threaded	801 - Double-Start Stub ACME 804 - Push/Pull 805 - Triple Start
Mating Cycles	100	500	500

© 2016 Glenair, Inc • 1211 Air Way, Glendale, CA 91201 • 818-247-6000 • www.glenair.com • U.S. CAGE code 06324 • SuperSeal™ Catalog
Dimensions in Inches (millimeters) are subject to change without notice.

Rev. 11.14.23

Introduction and Technical Reference

Performance specifications for USB 2.0, 3.0 and 3.2 Gen 2 connectors

USB 2.0/3.0/3.2 Gen 2 Performance Specifications			
Property	**MIL-DTL-38999 Series III Type**	**Series ITS 5015 Intermountable**	**Series IPT MIL-DTL-26482 Type**
Material and Finish			
Shell/Coupling and Plating	Complete list of options available in the Material and Finish Options portion of this section		
Contacts	PC tails, solder cup, and crimp contacts: copper alloy, gold plated		
Grommet, Peripheral Seal, Interfacial Seal, O-ring	Blended fluorosilicone/silicone elastomer, 30% silicone per ZZ-R-765, 70% fluorosilicone per MIL-R-25988		
USB Insulator	LCP	PPS	
Shell Sizes	15 and 17 Consult factory for other shell size options	16	16
Electrical Specifications			
Power Usage	Up to 7.5W		
Current Rating	1.5 Amps,		
D.W.V.	500 VAC (USB 2.0), 100 VAC (USB 3.0)		
I.R.	1000 MegOhms minimum (USB 2.0), 100 MegOhms minimum (USB 3.0)		
Shielding	Continuous through coupler or continuous coupler to shell		USB housing ground to shell full shielding
Environmental/Mechanical Performance			
Sealing	IP68 mated condition, IP67 unmated condition		
Outgassing	**Mod Code 186S** meets outgassing requirements per ASTM E 595 and meets NASA level 3 screening for standard reliability **Mod Code 928** meets outgassing requirements per UL 94 V-0		
Operating Temperature	40°C to 120°C (USB 2.0), -40°C to +85°C (USB 3.0)		
Vibration	20g's, 3 Axis, 10 - 2000Hz	10G sine 10Hz - 2000Hz	10G sine 10Hz - 2000Hz
Mechanical Shock	300 g's	50G - 11ms	50G - 11ms
Backshell Interface	MIL-DTL-38999 Designator H	Consult Factory	Designator A
Mating System	Triple-start stub ACME	Reverse Bayonet	3-Pin Bayonet
Mating Cycles	500		

USB Protocol Specific Performance (regardless of connector)

Property	USB 2.0	USB 3.0	USB 3.2 Gen 2
Data Rate	480 MBps	5 Gbps	10 Gbps
Cabling Length	5.0 meters max.	3.0 meters max.	1.0 meter max.
Connector Compatibility	Type A	Type A	Type C

© 2016 Glenair, Inc • 1211 Air Way, Glendale, CA 91201 • 818-247-6000 • www.glenair.com • U.S. CAGE code 06324 • SuperSeal™ Catalog
Dimensions in Inches (millimeters) are subject to change without notice.

Performance specifications for USB 2.0, 3.0 and 3.2 Gen 2 connectors

USB 2.0/3.0/3.2 Gen 2 Performance Specifications		
Property	**MIL-DTL-28840 Type**	**Series 801, 804 and 805 MIghty Mouse**
Material and Finish		
Shell/Coupling and Plating	Complete list of options available in the Material and Finish Options portion of this section	
Contacts	PC tails, solder cup, and crimp contacts: copper alloy	
Grommet, Peripheral Seal, Interfacial Seal, O-ring	Blended fluorosilicone/silicone elastomer, 30% silicone per ZZ-R-765, 70% fluorosilicone per MIL-R-25988	
USB Insulator	PPS	LCP
Shell Sizes	15	**Micro USB**: Series 801 & 804 Shell Size 8 Series 805 shell Size 10 **Standard USB:** Series 801 Shell Size 16, Series 804 Shell Size 14, Series 805 Shell Size 18
Electrical Specifications		
Power Usage	Up to 7.5W	
Current Rating	1.5 Amps (USB 2.0 and 3.0)	
D.W.V.	500 VAC (USB 2.0), 100 VAC (USB 3.0)	500 VAC Standard USB 2.0 100 VAC Micro USB 2.0 Mighty Mouse 100 VAC Standard USB 3.0
I.R.	1000 MegOhms minimum (USB 2.0), 100 MegOhms minimum (USB 3.0)	
Shielding	Continuous through coupler or continuous coupler to shell	
Environmental/Mechanical Performance		
Sealing	IP68 mated condition, IP67 unmated condition	
Outgassing	**Mod Code 186S** meets outgassing requirements per ASTM E 595 and meets NASA level 3 screening for standard reliability **Mod Code 928** meets outgassing requirements per UL 94 V-0	
Operating Temperature	-40°C to 85°C (USB 3.0) -40°C to 120°C (USB 2.0)	-40° to +120°C (Standard) -20°C to +85°C (Micro)
Vibration	20g's, 3 Axis, 10 - 2000Hz	20g, 3 axis, 10-2000 Hz (Standard) 37.8g, 3 axis, 50-2000 Hz (Micro)
Mechanical Shock	300 g's	300g (Standard and Micro)
Backshell Interface	M28840, Connector Designator G	Consult Factory
Mating System	Threaded	801 - Double-Start Stub ACME 804 - Push/Pull 805 - Triple Start
Mating Cycles	100	2,000 (801 and 804) 500 (805)

USB Protocol Specific Performance (regardless of connector)

Property	USB 2.0	USB 3.0	USB 3.2 Gen 2
Data Rate	480 MBps	5 Gbps	10 Gbps
Cabling Length	5.0 meters max.	3.0 meters max.	1.0 meter max.
Connector Compatibility	Type A	Type A	Type C

© 2016 Glenair, Inc • 1211 Air Way, Glendale, CA 91201 • 818-247-6000 • www.glenair.com • U.S. CAGE code 06324 • SuperSeal™ Catalog
Dimensions in Inches (millimeters) are subject to change without notice.

HDMI performance specifications for MIL-DTL-D38999

HDMI 2.0 Performance Specifications	
Property	**MIL-DTL-38999 Series III Type**
Material and Finish	
Shell/Coupling and Plating	Complete list of options available in the Material and Finish Options portion of this section
Contacts	Copper alloy/gold plate
HDMI Insulator	LCP
Grommet, Peripheral Seal, Interfacial Seal, O-ring	Blended fluorosilicone/silicone elastomer, 30% silicone per ZZ-R-765, 70% fluorosilicone per MIL-R-25988
Shell Size	17 Consult factory for other shell size options
Electrical Specifications	
Data Rate	Up to 18 Gbps
Power Usage	+5.0 volts
Current Rating	0.3 Amps min.
D.W.V.	300 VAC
I.R.	100 Mega Ohms min
Cabling Length	10 Meters maximum (recommended)
Shielding	Continuous through coupler or continuous coupler to shell
Environmental/Mechanical Performance	
Sealing	IP67 unmated, IP68 mated
Outgassing	**Mod Code 186S** meets outgassing requirements per ASTM E 595 and meets NASA level 3 screening for standard reliability **Mod Code 928** meets outgassing requirements per UL 94 V-0
Operating Temperature	-20°C to +85°C
Backshell Interface	MIL-DTL-38999 Designator H
Mating System	Triple-start stub ACME
Mating Cycles	500

© 2016 Glenair, Inc • 1211 Air Way, Glendale, CA 91201 • 818-247-6000 • www.glenair.com • U.S. CAGE code 06324 • SuperSeal™ Catalog
Dimensions in Inches (millimeters) are subject to change without notice.

DisplayPort performance specifications for MIL-DTL-D38999

DisplayPort 1.4 Performance Specifications	
Property	**MIL-DTL-38999 Series III Type**
Material and Finish	
Shell/Coupling and Plating	Complete list of options available in the Material and Finish Options portion of this section
Contacts	Copper alloy/gold plate
DisplayPort Insulator	LCP
Grommet, Peripheral Seal, Interfacial Seal, O-ring	Blended fluorosilicone/silicone elastomer, 30% silicone per ZZ-R-765, 70% fluorosilicone per MIL-R-25988
Shell Size	17 Consult factory for other shell size options
Electrical Specifications	
Data Rate	25.92 Gbps maximum
Power Usage	+5.0 volts
Current Rating	5 Amps
D.W.V.	300 VAC (mated); 500 VAC (unmated)
I.R.	100 Mega Ohms min
Cabling Length	10 Meters max. (recommended)
Shielding	Continuous through coupler or continuous coupler to shell
Environmental/Mechanical Performance	
Sealing	IP67 unmated, IP68 mated
Outgassing	**Mod Code 186S** meets outgassing requirements per ASTM E 595 and meets NASA level 3 screening for standard reliability **Mod Code 928** meets outgassing requirements per UL 94 V-0
Operating Temperature	-20°C to +85°C
Backshell Interface	MIL-DTL-38999 Designator H
Mating System	Triple-start stub ACME
Mating Cycles	500

© 2016 Glenair, Inc • 1211 Air Way, Glendale, CA 91201 • 818-247-6000 • www.glenair.com • U.S. CAGE code 06324 • SuperSeal™ Catalog
Dimensions in Inches (millimeters) are subject to change without notice.

Introduction and Technical Reference

RJ45 Cat 5e and 6A TVS diode filter connector performance specifications

MIL-DTL-38999 Series III, TVS Diode, RJ45 Cat 5e and 6A Performance Specifications	
Material and Finish	
Shell/coupling Plating	Complete list of options available in the Material and Finish Options portion of this section
Contacts	PC tails or solder cup: copper alloy, gold plated
RJ45 coupler housing	UL94V-0 compliant ABS or PPS
Seals	Fluorosilicone
Shell Sizes	17 and 19
Environmental / Mechanical Performance	
Sealing	IP68 mated condition, IP67 unmated condition
Outgassing	Mod Code 186S* Mod Code 928**
Operating Temperature	-20°C to +85° C LT -40 to +125° C HT
Vibration	20g's, 3 Axis, 10 - 2000Hz
Mechanical Shock	300 g's
Backshell Interface	MIL-DTL-38999 Designator H
Mating Cycles	500

* Meets outgassing requirements per ASTM E 595 and meets NASA screening requirements for level 1 highest reliability
** Meets outgassing requirements per UL 94 V-0

MIL-DTL-38999 Series III, TVS Diode, RJ45 Cat 5e and 6A Performance Specifications	
RJ45 Cat 6A & 5e Electrical Specifications	
Voltage Rating	1000 Volts, Cat 5e
Data Rate	10BASE-T, 100BASE-TX, 1000BASE-T/1000BASE-TX
Current Rating	1.5 Amps
D.W.V.	1000 VDC (700 VAC)
Frequency	100 MHz, Cat 5e 500 MHz, Cat 6A
Wiring	Straight through
Cabling Length	100 Meters Max
Shield Continuity	Continuous Through Coupler and Grounded to the Shell

FIGURE 1

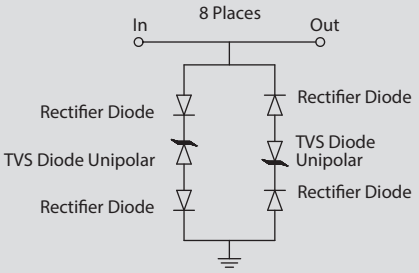

RTCA DO-160 Indirect Lightning Waveset A Waveforms		
RTCA DO-160 Waveform	**Level**	**Open Circuit Voltage/ Short Circuit Voltage V/A**
Waveform 3	1	100/4
	2	250/10
Waveform 4	1	50/10
	2	125/25

MIL-DTL-38999 Series III, TVS Diode, RJ45 Cat 5e and 6A Performance Specifications	
TVS Electrical Specifications Each signal line has TVS diode protection per the electrical schematic in figure 1.	
Peak pulse power (tp = 8/20us)	1,200w
Rated standoff voltage	2.8V
Minimum breakdown voltage	3.0V @ 1mA
Max clamping voltage (@ Ipp = 2A)	5.5V
Max clamping voltage (@ Ipp = 5A)	8.5V
Max clamping voltage (@ Ipp = 30A)	21.0V
Max leakage current	2.0uA max @ 2.8V
Typical junction capacitance	10pF @ 0v, 1Mhz
Polarity	bipolar
Compatible with IEC 61000-4-2 (ESD)	air - 15kv, contact - 8kv
Compatible with IEC 61000-4-4 (EFT)	40A - 5/50ns
Compatible with IEC 61000-4-5 (surge)	24A, 8/20us - level 2 (line-gnd) & level 3 (line-line)
Meets indirect lightning strike requirements per D0-160, section 22 pin injection waveform set A2.	

Waveform 3

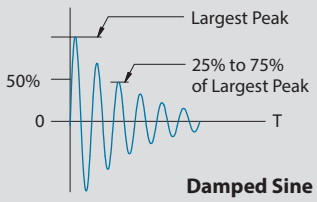

Waveform 4

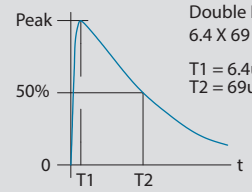

© 2016 Glenair, Inc • 1211 Air Way, Glendale, CA 91201 • 818-247-6000 • www.glenair.com • U.S. CAGE code 06324 • SuperSeal™ Catalog
Dimensions in Inches (millimeters) are subject to change without notice.

Material and finish options for SuperSeal™ connectors

MIL-DTL-38999 Connector and Cable Assembly Material and Finish Codes							
Code	Material	Finish	Finish Specification	Hrs. Salt Spray	Electrical Conductivity	Operating Temp. Range	RoHS Compliance
ME	Aluminum	Electroless Nickel	MIL-DTL-24308 Class K	96	Yes		Yes
MT	Aluminum	Nickel PTFE	SAE AMS2454	500	Yes	-65° to +175°C	Yes
NF	Aluminum	Cadmium, Olive Drab	SAE-AMS-QQ-P-416 Type II Class 2 over electroless nickel	500	Yes	-65° to +175°C	No
ZR	Aluminum	Zinc-Nickel, Black	ASTM B841 Grade 5 over electroless nickel	500	Yes	-65° to +175°C	Yes
AB	Marine Bronze	None		1000	Yes	-65° to +200°C	Yes
XM	Composite	Electroless Nickel	AMS-C-26074	2000	Yes	-65° to +175°C	Yes
Z1	Stainless Steel	Passivate	SAE-AMS-SAE-AMS-QQ-P-35 Type VI	1000	Yes	-65° to +200°C	Yes

Glenair Series ITS (5015 Intermountable) Material and Finish Codes						
Code	Material	Finish	Hrs. Salt Spray	Electrical Conductivity	Operating Temp. Range	RoHS Compliance
F6	Aluminum	Black Epoxy Paint	500	No	-55° to +125°C	Yes
F7	Aluminum	Black Zinc Nickel	500	Yes	-55° to +125°C	Yes
F11	Aluminum	Electroless Nickel	48	Yes	-55° to +125°C	Yes
G3	Aluminum	Cadmium, Olive Drab	500	Yes	-55° to +125°C	No

Glenair Series IPT (IAW MIL-DTL-26482) Material and Finish Codes						
Code	Material	Finish	Hrs. Salt Spray	Electrical Conductivity	Operating Temp. Range	RoHS Compliance
F6	Aluminum	Black Epoxy Paint	500	No	-55° to +125°C	Yes
F7	Aluminum	Black Zinc Nickel	500	Yes	-55° to +125°C	Yes
F11	Aluminum	Electroless Nickel	48	Yes	-55° to +125°C	Yes
G3	Aluminum	Cadmium, Olive Drab	500	Yes	-55° to +125°C	No

MIL-DTL-28840 Material and Finish Options							
Code	Material	Finish	Finish Specification	Hrs. Salt Spray	Electrical Conductivity	Operating Temp. Range	RoHS Compliance
NF	Aluminum	Cadmium, Olive Drab	SAE-AMS-QQ-P-416	500	Yes	-65 to +175°C	No
ZR	Aluminum	Zinc-Nickel, Black	ASTM B841	500	Yes	-65 to +175°C	Yes
MT	Aluminum	Nickel-PTFE, 1000 Hour Grey™	AMS2454	1000	Yes	-65 to +175°C	Yes
Z1	Stainless Steel	Passivate	SAE-AMS-QQ-P-35	1000	Yes	-65 to +200°C	Yes

Series 80 MIghty Mouse Material and Finish Codes							
Code	Material	Finish	Finish Specification	Hrs. Salt Spray	Electrical Conductivity	Operating Temp. Range	RoHS Compliance
M	Aluminum	Electroless Nickel	AMS-C-26074	48	Yes	-65 to +200°C	Yes
MT	Aluminum	Nickel-PTFE	SAE AMS2454	500	Yes	-65 to +175°C	Yes
NF	Aluminum	Cadmium, Olive Drab	SAE-AMS-QQ-P-416	500	Yes	-65 to +175°C	No
ZNU	Aluminum	Zinc-Nickel, Black	ASTM B841	500	Yes	-65 to +175°C	No
Z1	Stainless Steel	Passivate	SAE-AMS-QQ-P-35	1000	Yes	-65 to +200°C	Yes

Consult Factory for Additional Material and Finish Options

© 2016 Glenair, Inc • 1211 Air Way, Glendale, CA 91201 • 818-247-6000 • www.glenair.com • U.S. CAGE code 06324 • SuperSeal™ Catalog
Dimensions in Inches (millimeters) are subject to change without notice.

Rev. 11.14.23

Recommended panel cutouts for MIL-DTL-38999 Series III type connectors

MIL-DTL-38999 TYPE RJ45 PANEL CUTOUTS FOR SHELL SIZE 17 AND 19

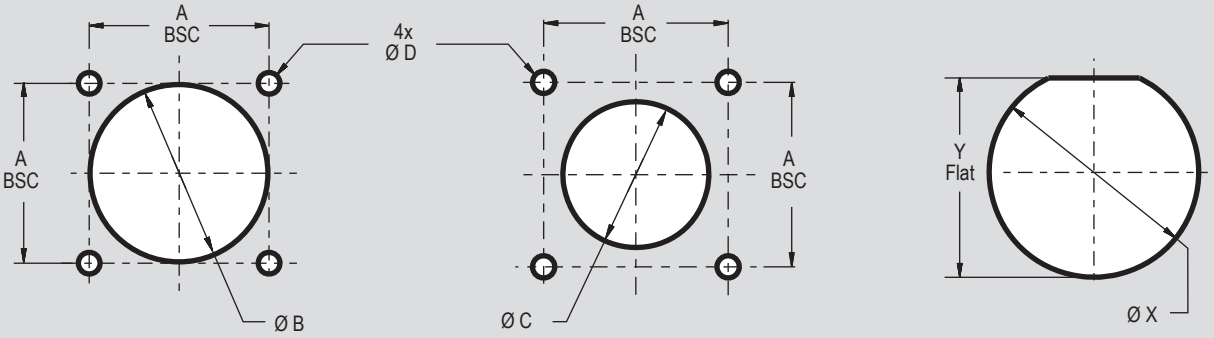

WALL MOUNT
REAR PANEL MOUNT

WALL MOUNT
FRONT PANEL MOUNT

JAM NUT MOUNT

Panel Cut-Out Dimensions						
Shell Size	A Bsc	B Dia Min	C Dia Min	D Holes	X Dia	Y Flat
17	1.062 (26.97)	1.219 (30.96)	1.016 (25.81)	.133 (3.38) .123 (3.12)	1.270 (32.26) 1.260 (32.00)	1.210 (30.73) 1.200 (30.48)
19	1.156 (29.36)	1.297 (32.94)	1.141 (28.98)		1.395 (35.43) 1.385 (35.18)	1.335 (33.91) 1.325 (33.66)

MIL-DTL-38999 TYPE USB AND HDMI PANEL CUTOUTS FOR SHELL SIZE 15 (USB ONLY) AND 17

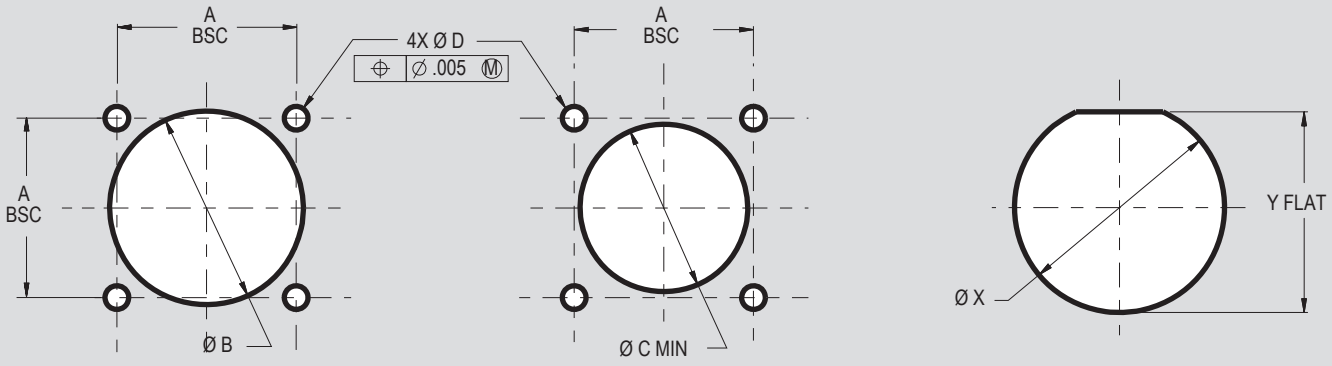

WALL MOUNT
REAR PANEL MOUNT

WALL MOUNT
FRONT PANEL MOUNTING

JAM NUT MOUNT

Panel Cut-Out Dimensions						
Shell Size	A BSC	B Dia Min	C Dia Min	D Holes	X Dia	Y Flat
15	.969 (24.61)	1.047 (26.59)	.906 (23.01)	.133 (3.38) .123 (3.12)	1.145 (29.08) 1.135 (28.83)	1.085 (27.56) 1.075 (27.31)
17	1.062 (26.97)	1.219 (30.96)	1.016 (25.81)*		1.270 (32.26) 1.260 (32.00)	1.210 (30.73) 1.200 (30.48)

* Available for HDMI connectors only. Front panel mounting is not available for SuperSeal 38999 Type USB connectors.

© 2016 Glenair, Inc • 1211 Air Way, Glendale, CA 91201 • 818-247-6000 • www.glenair.com • U.S. CAGE code 06324 • SuperSeal™ Catalog
Dimensions in Inches (millimeters) are subject to change without notice.

Recommended panel cutouts for Glenair Series ITS (5015 intermountable) connectors

GLENAIR SERIES ITS (MIL-DTL-5015) RJ45 PANEL CUTOUTS FOR SHELL SIZE 18

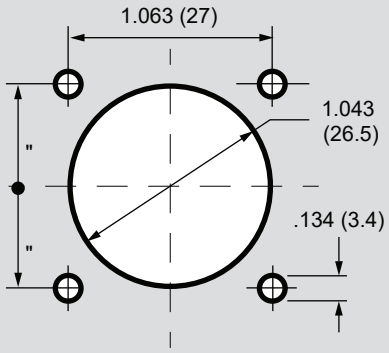

SQUARE FLANGE
FRONT PANEL MOUNTING

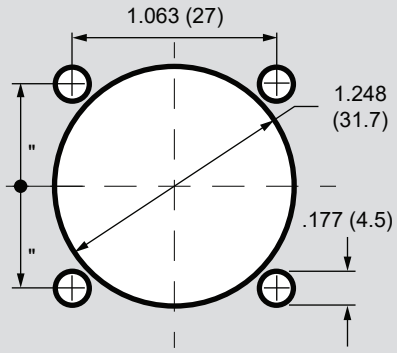

SQUARE FLANGE
REAR PANEL MOUNTING

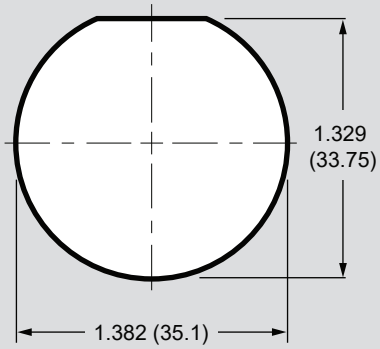

JAM NUT MOUNT

GLENAIR SERIES ITS (MIL-DTL-5015) USB PANEL CUTOUTS FOR SHELL SIZE 16

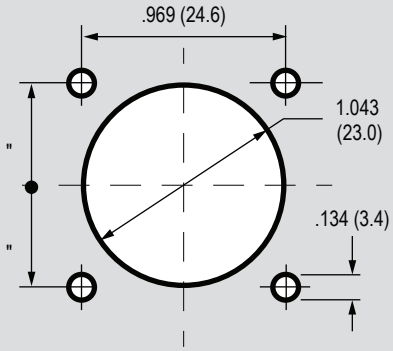

SQUARE FLANGE
FRONT PANEL MOUNT

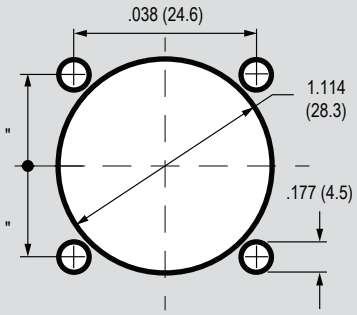

SQUARE FLANGE
REAR PANEL MOUNT

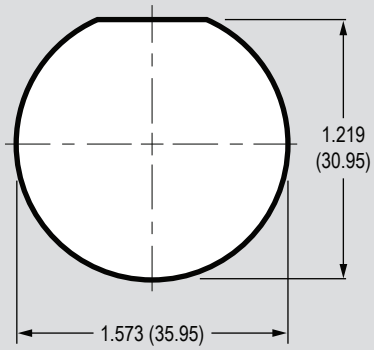

JAM NUT MOUNT

© 2016 Glenair, Inc • 1211 Air Way, Glendale, CA 91201 • 818-247-6000 • www.glenair.com • U.S. CAGE code 06324 • SuperSeal™ Catalog
Dimensions in Inches (millimeters) are subject to change without notice.

Rev. 11.14.23

Recommended panel cutouts for Glenair Series IPT (MIL-DTL-26482 type) connectors

GLENAIR SERIES IPT (MIL-DTL-26482 TYPE) RJ45 PANEL CUTOUTS FOR SHELL SIZE 18

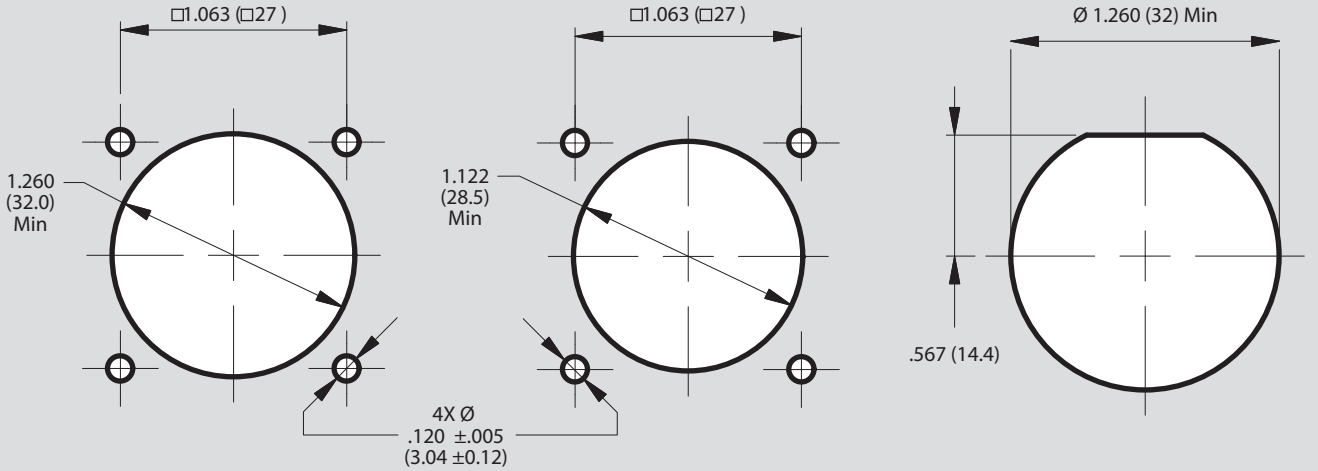

SQUARE FLANGE REAR MOUNT
RECOMMENDED MOUNTING HOLES

SQUARE FLANGE FRONT MOUNT
RECOMMENDED MOUNTING HOLES

JAM NUT MOUNT
RECOMMENDED MOUNTING HOLE
PANEL THICKNESS .063-.126 (1.6 -3.2)

GLENAIR SERIES IPT (MIL-DTL-26482 TYPE) USB PANEL CUTOUTS FOR SHELL SIZE 16

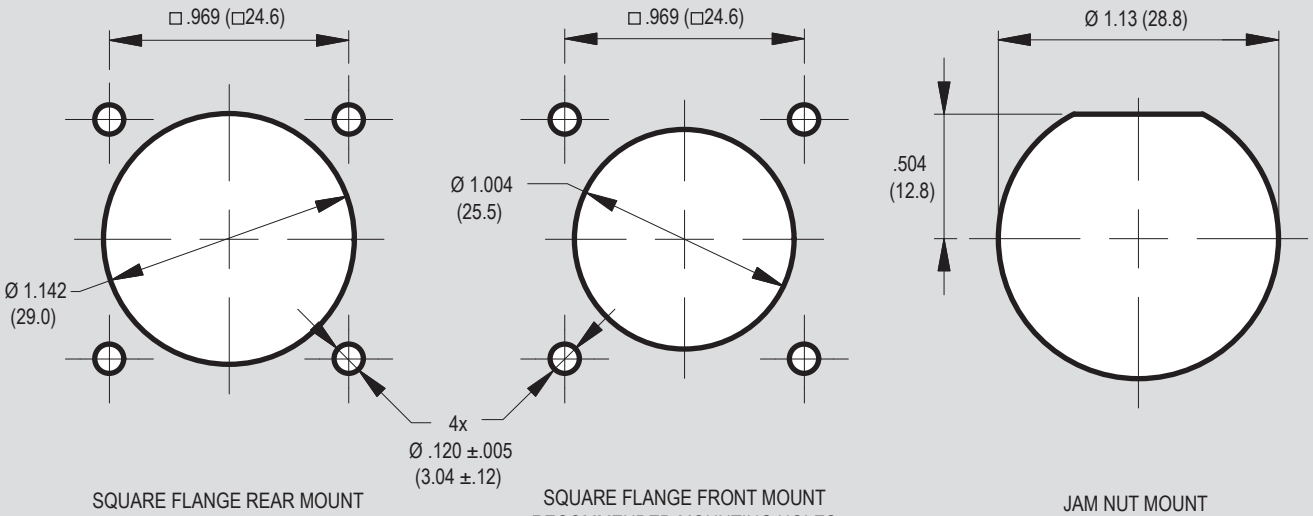

SQUARE FLANGE REAR MOUNT
RECOMMENDED MOUNTING HOLES

SQUARE FLANGE FRONT MOUNT
RECOMMENDED MOUNTING HOLES

JAM NUT MOUNT
RECOMMENDED MOUNTING HOLE
PANEL THICKNESS .063-.126 (1.6 -3.2)

© 2016 Glenair, Inc • 1211 Air Way, Glendale, CA 91201 • 818-247-6000 • www.glenair.com • U.S. CAGE code 06324 • SuperSeal™ Catalog
Dimensions in Inches (millimeters) are subject to change without notice.

Rev. 11.14.23

Recommended panel cutouts for MIL-DTL-28840 type connectors

MIL-DTL-28840 TYPE RJ12 PANEL CUTOUTS FOR SHELL SIZE 15 AND 17

Recommended Panel Cutouts			
Shell Size	ØM	ØN	P Flat
15	1.124 (28.55)	1.203 (30.56) 1.193 (30.30)	1.165 (29.59) 1.155 (29.34)
17	1.187 (30.15)	1.265 (32.13) 1.255 (31.88)	1.228 (31.19) 1.218 (30.94)

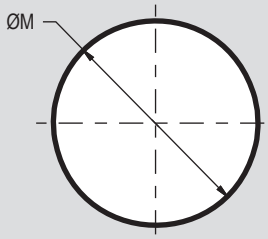

WALL MOUNT RECEPTACLE
MAX PANEL THICKNESS
.188 (4.78)

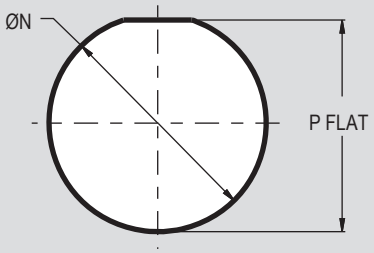

REAR PANEL MOUNT
JAM NUT RECEPTACLE
MAX PANEL THICKNESS
.188 (4.78)

MIL-DTL-28840 TYPE RJ45 PANEL CUTOUTS FOR SHELL SIZE 17 AND 19

Panel Cutouts			
Shell Size	ØP	ØR	S Flat
17	1.187 (30.15)	1.265 (32.13) 1.255 (31.88)	1.228 (31.19) 1.218 (30.94)
19	1.374 (34.90)	1.453 (36.91) 1.443 (36.65)	1.415 (35.94) 1.405 (35.69)

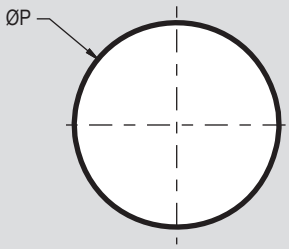

WALL MOUNT RECEPTACLE
MAX PANEL THICKNESS
.188 (4.78)

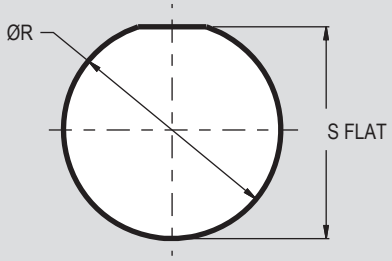

REAR PANEL MOUNT
JAM NUT RECEPTACLE
MAX PANEL THICKNESS
.188 (4.78)

MIL-DTL-28840 TYPE USB PANEL CUTOUTS FOR SHELL SIZE 15

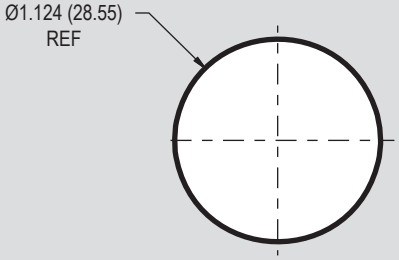

WALL MOUNT RECEPTACLE
MAX PANEL THICKNESS
.188 (4.78)

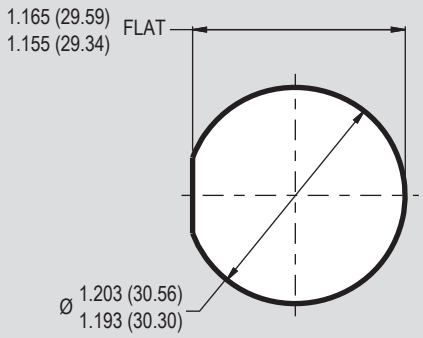

JAM NUT RECEPTACLE
REAR PANEL MOUNT
MAX PANEL THICKNESS
.188 (4.78) MAX

© 2016 Glenair, Inc • 1211 Air Way, Glendale, CA 91201 • 818-247-6000 • www.glenair.com • U.S. CAGE code 06324 • SuperSeal™ Catalog
Dimensions in Inches (millimeters) are subject to change without notice.

Rev. 11.14.23

Recommended panel cutouts for Mighty Mouse Series 801, 804 and 805 connectors

SERIES 801 MIGHTY MOUSE RJ45 PANEL CUTOUTS FOR SHELL SIZE 17 AND 19

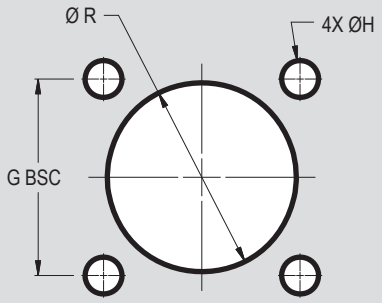

FRONT OR REAR PANEL MOUNT
SQUARE FLANGE RECEPTACLE

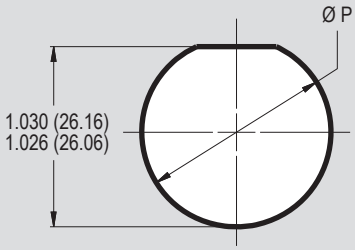

REAR PANEL MOUNT
JAM NUT RECEPTACLE

Panel Cut-Out Dimenions						
Shell Size	Mounting Style	N Flat	Ø P	G BSC	ØH Holes	Ø R
17	Jam Nut	1.104 (28.04) 1.100 (27.94)	1.135 (28.83)	-	-	-
	Square Flange	-		1.060 (26.92)	.130 (3.30) .126 (3.20)	1.078 (27.38)
19	Jam Nut	1.235 (31.67) 1.231 (31.27)	1.260 (32.00)	-	-	-
	Square Flange	-	-	1.191 (30.25)	.130 (3.30) .126 (3.20)	1.203 (30.56)

SERIES 804 USB MIGHTY MOUSE RJ45 PANEL CUTOUTS FOR SHELL SIZE 15 AND 16

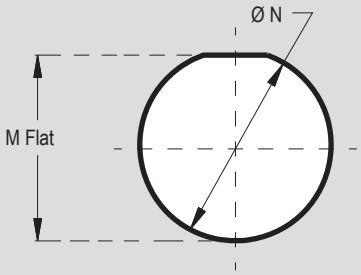

REAR PANEL MOUNT
JAM NUT RECEPTACLE

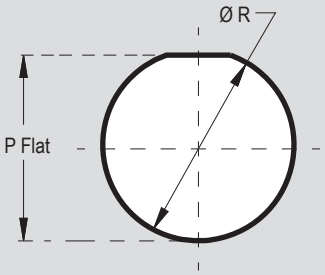

FRONT PANEL MOUNT
JAM NUT RECEPTACLE

Panel Cut-Out Dimenions					
Shell Size	Mounting Style	M Flat	Ø N	P Flat	Ø R
15	Front Mount	-	-	1.015 (25.78) 1.011 (25.68)	1.135 (28.83)
	Rear Mount	1.041 (26.44) 1.037 (26.34)	1.070 (27.18)	-	-
16	Front Mount	-		1.157 (29.38) 1.153 (29.27)	1.198 (30.43)
	Rear Mount	1.102 (27.99) 1.098 (27.89)	1.135 (28.83)	-	-

SERIES 805 USB MIGHTY MOUSE RJ45 PANEL CUTOUTS FOR SHELL SIZE 19 AND 21

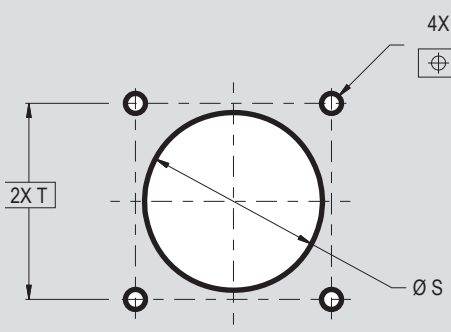

FRONT OR REAR PANEL MOUNT
SQUARE FLANGE RECEPTACLE
(NOTE: -12 & -22 REAR MOUNT ONLY
-02 FRONT OR REAR MOUNT)

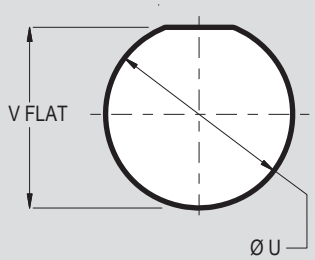

REAR PANEL MOUNT
JAM NUT RECEPTACLE

Panel Cut-Out Dimenions				
Shell Size	Ø S	T BSC	Ø U	V Flat
19	1.203 (30.56)	1.327 (33.71)	1.262 (32.05) 1.258 (31.95)	1.233 (31.32) 1.229 (31.22)
21	1.328 (33.73)	1.452 (36.88)	1.387 (35.23) 1.383 (35.13)	1.360 (34.54) 1.356 (34.44)

© 2016 Glenair, Inc • 1211 Air Way, Glendale, CA 91201 • 818-247-6000 • www.glenair.com • U.S. CAGE code 06324 • SuperSeal™ Catalog
Dimensions in Inches (millimeters) are subject to change without notice.

Rev. 11.14.23

Recommended panel cutouts for Mighty Mouse series 801 and 805 “Micro” USB connectors

SERIES 801 MIGHTY MOUSE, MICRO USB PANEL CUTOUTS FOR SHELL SIZE 8

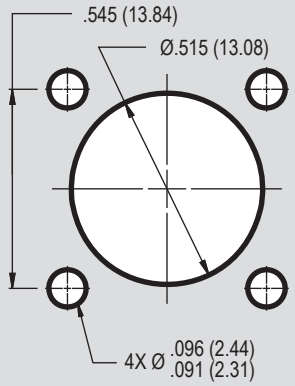

SQUARE FLANGE RECEPTACLE

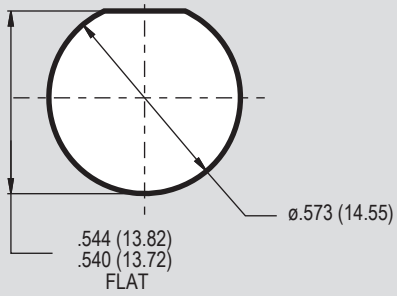

REAR PANEL MOUNT
JAM NUT RECEPTACLE

SERIES 805 MIGHTY MOUSE, MICRO USB PANEL CUTOUTS FOR SHELL SIZE 10

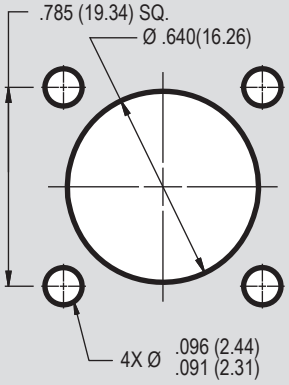

SQUARE FLANGE RECEPTACLE

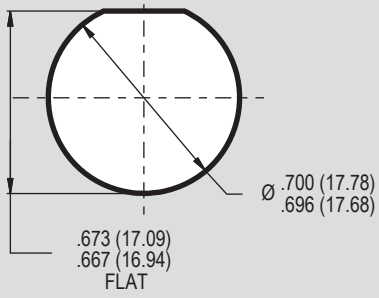

REAR PANEL MOUNT
JAM NUT RECEPTACLE

© 2016 Glenair, Inc • 1211 Air Way, Glendale, CA 91201 • 818-247-6000 • www.glenair.com • U.S. CAGE code 06324 • SuperSeal™ Catalog
Dimensions in Inches (millimeters) are subject to change without notice.

Rev. 11.14.23

Recommended panel cutouts for Mighty Mouse Series 801, 804 and 805 connectors

SERIES 801 MIGHTY MOUSE, TYPE A STANDARD USB, PANEL CUTOUTS FOR SHELL SIZE 16

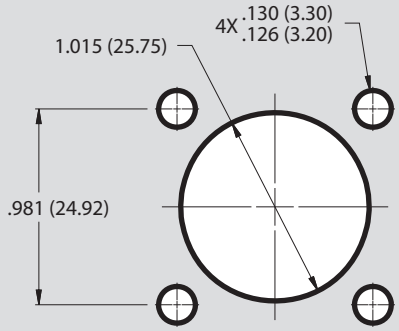

FRONT OR REAR PANEL MOUNT
SQUARE FLANGE RECEPTACLE

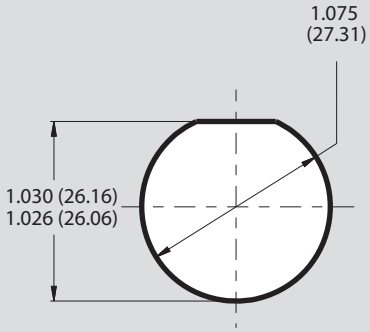

REAR PANEL MOUNT
JAM NUT RECEPTACLE

SERIES 804 USB MIGHTY MOUSE , TYPE A STANDARD USB, PANEL CUTOUTS FOR SHELL SIZE 14

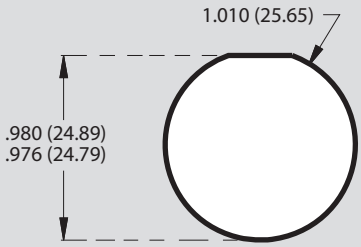

REAR PANEL MOUNT
JAM NUT RECEPTACLE

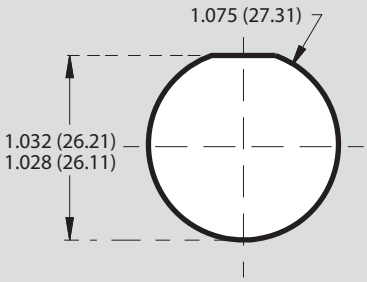

FRONT PANEL MOUNT
JAM NUT RECEPTACLE

SERIES 805 USB MIGHTY MOUSE, TYPE A STANDARD USB, PANEL CUTOUTS FOR SHELL SIZE 18

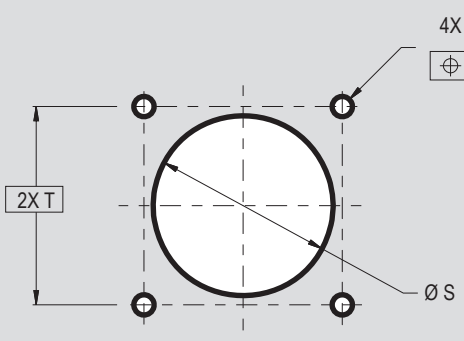

FRONT OR REAR PANEL MOUNT
SQUARE FLANGE RECEPTACLE
(NOTE: -12 & -22 REAR MOUNT ONLY
-02 FRONT OR REAR MOUNT)

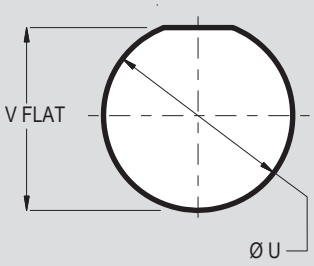

REAR PANEL MOUNT
JAM NUT RECEPTACLE

© 2016 Glenair, Inc • 1211 Air Way, Glendale, CA 91201 • 818-247-6000 • www.glenair.com • U.S. CAGE code 06324 • SuperSeal™ Catalog
Dimensions in Inches (millimeters) are subject to change without notice.

Alternate key and keyway positions for MIL-DTL-38999 and MIL-DTL 28840 type connectors

MIL-DTL-38999 POLARIZATION KEY(PLUG) AND KEYWAY (RECEPTACLE) POSITIONS

Alternate Key and Keyway Polarization					
Shell Size	Key and Keyway Code	AR° or AP° BSC	BR° or BP° BSC	CR° or CP° BSC	DR° or DP° BSC
17 19	N	80	142	196	293
	A	135	170	200	310
	B	49	169	200	244
	C	66	140	200	257
	D	62	145	180	280
	E	79	153	197	272

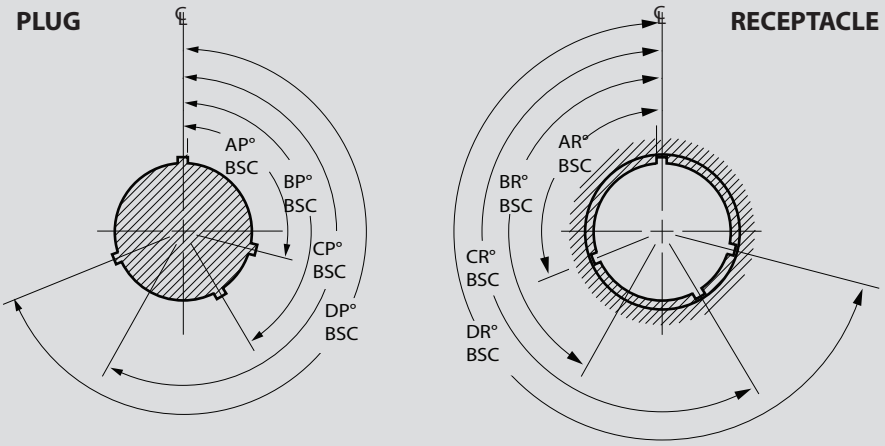

MIL-DTL-28840 POLARIZATION KEY AND KEYWAY ARRANGEMENTS

Alternate Key and Keyway Polarization					
Shell Size	Key and Keyway Code	AR° or AP° BSC	BR° or BP° BSC	CR° or CP° BSC	DR° or DP° BSC
15 (C) 17 (D)	1	80	142	196	293
	2	135	170	200	310
	3	49	169	200	244
	4	66	140	200	257
	5	62	145	180	280
	6	79	153	197	272
19 (E)	1	80	142	196	293
	2	135	170	200	310
	3	49	169	200	244
	4	66	140	200	257
	5	62	145	180	280
	6	79	153	197	272

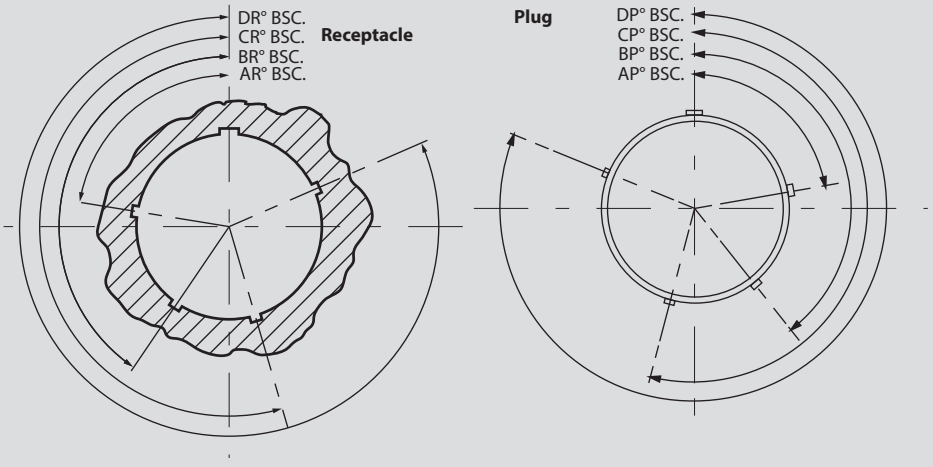

© 2016 Glenair, Inc • 1211 Air Way, Glendale, CA 91201 • 818-247-6000 • www.glenair.com • U.S. CAGE code 06324 • SuperSeal™ Catalog
Dimensions in Inches (millimeters) are subject to change without notice.

Alternate key and keyway positions for Mighty Mouse Series 801 and 805 connectors

SERIES 801 MIGHTY MOUSE ALTERNATE KEY(PLUG) KEYWAY (RECEPTACLE) POSITIONS

Alternate Key Positions		
Position	A°	B°
A	150°	210°
B	75°	210°
C	95°	230°
D	140°	275°
E	75°	275°
F	95°	210°

PLUG

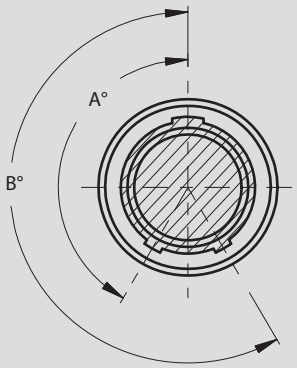

RECEPTACLE

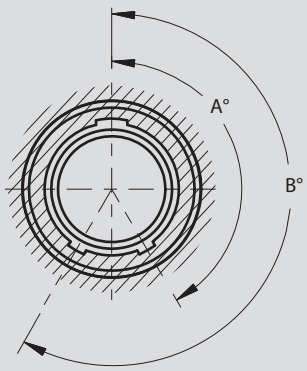

SERIES 805 MIGHTY MOUSE ALTERNATE KEY(PLUG) KEYWAY (RECEPTACLE) POSITIONS

Alternate Key and Keyway Positions		
Position	AA°	BB°
A	150°	210°
B	75°	210°
C	95°	230°
D	140°	275°
E	75°	275°
F	95°	210°

PLUG

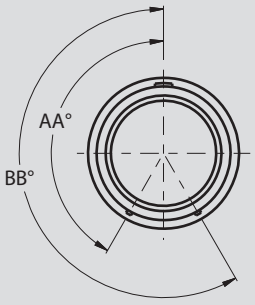

Normal and Alternate Postion
Key Rotation (Plug)

RECEPTACLE

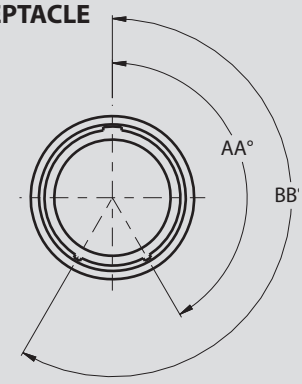

Normal and Alternate Postion
Keyway Rotation (Receptacle)

© 2016 Glenair, Inc • 1211 Air Way, Glendale, CA 91201 • 818-247-6000 • www.glenair.com • U.S. CAGE code 06324 • SuperSeal™ Catalog
Dimensions in Inches (millimeters) are subject to change without notice.

PCB Footprint and orientation options for SuperSeal™ PCB receptacles

RJ45 PCB FOOTPRINT AND ORIENTATIONS FOR MIL-DTL-38999, 5015, 26482 AND MIGHTY MOUSE SERIES 80, SHOWN FROM SOLDER SIDE (BOTTOM) OF BOARD

CODE 1

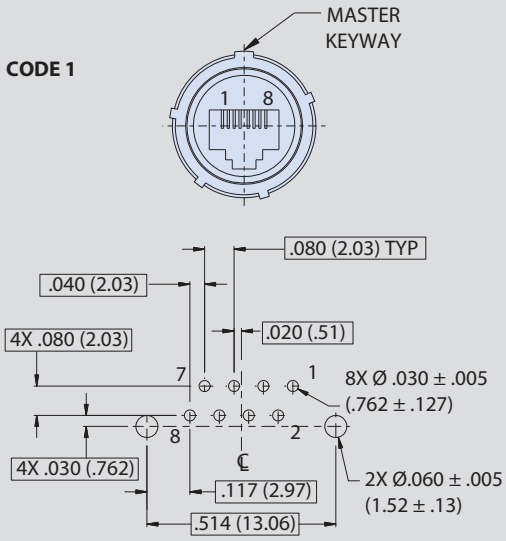

CODE 2

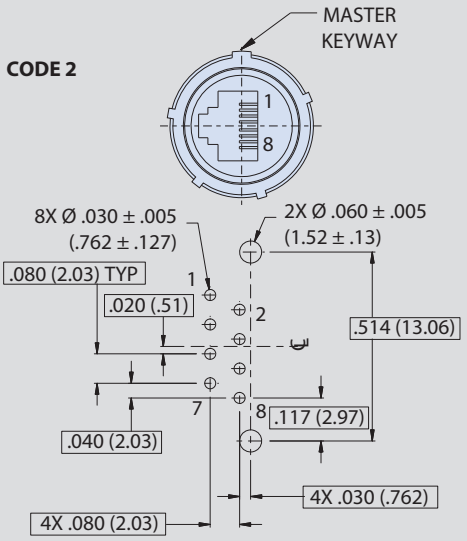

CODE 3

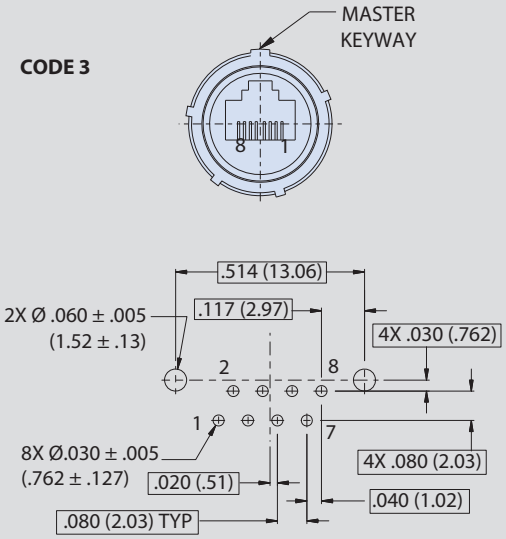

CODE 4

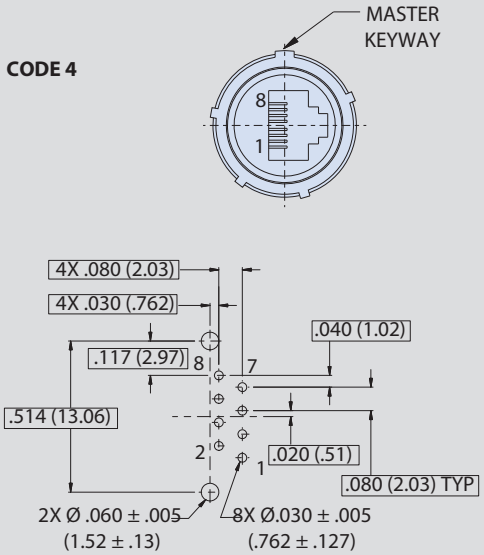

© 2016 Glenair, Inc • 1211 Air Way, Glendale, CA 91201 • 818-247-6000 • www.glenair.com • U.S. CAGE code 06324 • SuperSeal™ Catalog
Dimensions in Inches (millimeters) are subject to change without notice.

PCB footprint and orientation options for SuperSeal™ PCB receptacles

STANDARD USB 2.0 PCB FOOTPRINTS FOR MIL-DTL-38999, 5015, 26482 AND MIGHTY MOUSE SERIES 80, SHOWN FROM SOLDER SIDE (BOTTOM) OF BOARD

V (VERTICAL)

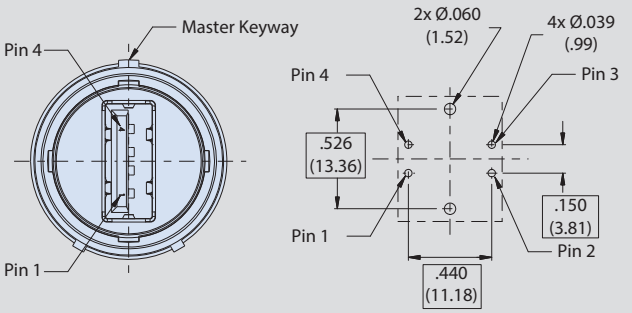

PCB Layout (Solder Side)

H (HORIZONTAL)

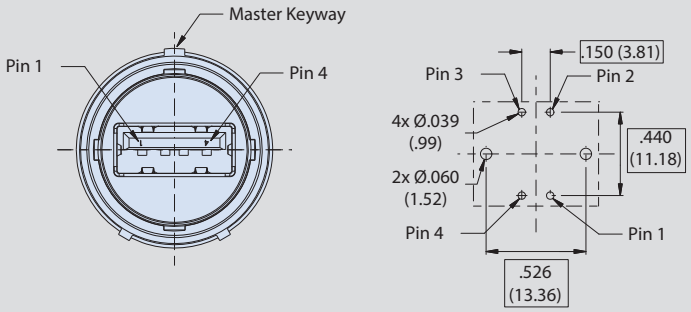

PCB Layout (Solder Side)

HDMI PCB FOOTPRINT AND ORIENTATIONS FOR MIL-DTL-38999, SHOWN FROM SOLDER SIDE (BOTTOM) OF BOARD

V (VERTICAL)

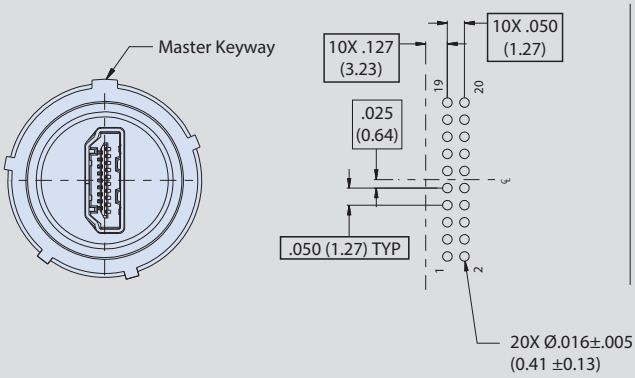

PCB Layout (Solder Side)

H (HORIZONTAL)

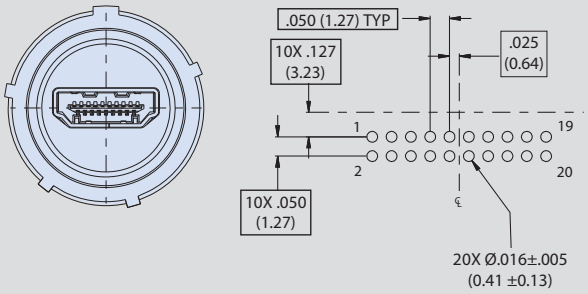

PCB Layout (Solder Side)

© 2016 Glenair, Inc • 1211 Air Way, Glendale, CA 91201 • 818-247-6000 • www.glenair.com • U.S. CAGE code 06324 • SuperSeal™ Catalog
Dimensions in Inches (millimeters) are subject to change without notice.

Introduction and Technical Reference

Modification codes for SuperSeal™ connectors

ASTM E595 Outgassing

MOD CODE 186S

- **SuperSeal® connectors specially processed to meet ASTM E595 outgassing requirements.**
- **Modification code specifies special outgassing bakeout processing.**
- **Meets NASA Screening Level 1 requirements**

Space flight equipment requires low-outgassing components in order to prevent degradation to optics and other sensitive instruments. The space industry has adopted a standardized test procedure, ASTM E595, to evaluate outgassing properties. In the ASTM test, material samples are heated to 125° C at a vacuum of 5 X 10^{-5} torr for 24 hours. The test sample is then weighed to calculate the Total Mass Loss (TML), which may not exceed 1.0% of the total initial mass. A collector plate is used to determine the Collected Volatile Condensable Material (CVCM), which may not exceed 0.1% of the total original specimen mass. SuperSeal™ connectors contain nonmetallic materials such as rubber, plastic, adhesives and potting compounds which can give off gases when subjected to a vacuum or high heat. Unless the connector is specially processed, the TML and CVCM can exceed allowable limits. Glenair is able to offer a bakeout process, 48 hour oven bakeout at 257º F, which assures all materials comply with ASTM E595

UL 94 V-0 Flamability Standard

MOD CODE 928

- **SuperSeal® connectors specially processed to meet UL 94 V-0 flammability standard**

UL 94, the Standard for Safety of Flammability of Plastic Materials for Parts in Devices and Appliances testing is a plastics flammability standard released by Underwriters Laboratories of the USA. The standard classifies plastics according to how they burn in various orientations and thicknesses. From lowest (least flame-retardant) to highest (most flame-retardant) V-0. Burning stops within 10 seconds on a vertical specimen; specimens may not drip flaming particles.

Flip Vertical USB Orientation by 180 degrees

MOD CODE 915

Flip standard, vertically oriented USB designs 180 degrees, allowing pin 1 to be located at the 12 O'clock position.

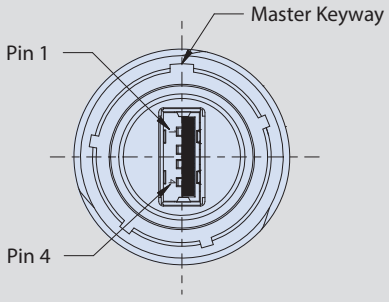

Vertical
With Pin 1 at 12 O'clock

© 2016 Glenair, Inc • 1211 Air Way, Glendale, CA 91201 • 818-247-6000 • www.glenair.com • U.S. CAGE code 06324 • SuperSeal™ Catalog
Dimensions in Inches (millimeters) are subject to change without notice.

Rev. 11.14.23



SuperSeal™

USB 3.0 connectors



The latest version of the Universal Serial Bus (USB) standard for interfacing computers and electronic devices sees a significant speed increase over the previous standard. The USB 2.0 standard offers a theoretical maximum signaling rate of 480 megabits per second, while USB 3.0 defines a maximum rate of 5 gigabits per second—more than ten times faster than USB 2.0. To achieve this, one-way communication on USB 2.0 has been dropped. USB 3.0 uses two unidirectional data paths, one to receive data and the other to transmit. USB 3.0 also provides up to 900mA of power when needed (better power management helps to conserve power when connected devices sit idle), as well as robust sealing against fluids and dust for harsh environments with 1P67-rated sealing in an unmated condition and IP68-rated when mated. Glenair connectors and cable assemblies deliver improved EMI/RFI shielding, outstanding sealing and improved shock and vibration protection. USB 3.0 is available across the following connector types: 38999, 5015 (ITS), 26482 (IPT), 28840 and Mighty Mouse. These popular connector families fill the growing need within aerospace, naval, industrial, and soldier worn, harsh-environment applications to benefit from this ubiquotous, high-speed, data transmission protocol. Military grade connector protection against water ingress, dust and debris, while maintaining signal integrity allows for USB 3.0 to be used across various applications. Glenair is committed to offering an evolving range of protocol support and termination options to meet advanced communication requirements in harsh environmental conditions.

- **USB 3.0 protocol**
- **High-speed data transmission rate of up to 5Gb/s**
- **High-sealing capability: IP67 rated in unmated condition. 1P68 rated in mated condition**
- **Available across all SuperSeal™ connector packages including D38999, 5015 (ITS), 26482 (IPT), 28840 and Mighty Mouse Series 801, 804 and 805**

© 2016 Glenair, Inc • 1211 Air Way, Glendale, CA 91201 • 818-247-6000 • www.glenair.com • U.S. CAGE code 06324 • SuperSeal™ Catalog
Dimensions in Inches (millimeters) are subject to change without notice.

MIL-DTL-38999 TYPE
FIELD-READY
RJ45 ETHERNET

SUPERSEAL™



Rugged environmental MIL-DTL-38999 type connectors with IP67 unmated sealing, robust insert-to-shell grounding, and a complete range of wire, cable, and circuit board terminations



Features

- **Superior sealing—IP68 when mated—for complete system protection against water, sand and dust**
- **Highly durable RJ45 design, including enhanced operating temperature, increased life-cycle, and rugged vibration and shock performance**
- **Shielded/grounded coupler designs in both receptacle and plug connectors**
- **Crimp, solder-cup, PC tail, and Quadrax contact/wire termination options**
- **RJ45 plug and/or jack interface options available in Cat 5e or Cat 6a**
- **Industry standard scoop proof, self-locking, triple-start threaded coupling design of MIL-DTL-38999 Series III type connectors**
- **Intermateable with other MIL-DTL-38999 type RJ45 field-duty connectors**

Glenair®

Glenair, Inc.
1211 Air Way
Glendale, CA 91201-2497
818-247-6000
sales@glenair.com
www.glenair.com

RJ45/USB SUPER SEAL™

RJ45 CAT 5E/6A ETHERNET

MIL-DTL-38999 Series III Type Connectors

Product Selection Guide

Glenair®



233-312 E-9

SuperSeal™ CAT 6A Plug with RJ45 Male Mating Interface and Accessory Threads

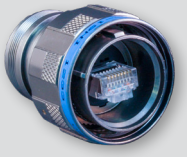

233-300 E-10

SuperSeal D38999 Type plug with CAT 5e or 6A RJ45 Plug or D38999 Type Receptacle with CAT 5e or 6A RJ45 Jack. D38999 Type Shells with Accessory Threads



233-301 E-12

SuperSeal™ CAT 5e Receptacle Adapter with RJ45 Mating Interface and Crimp Removable Contacts.

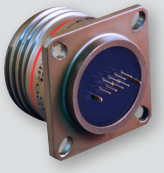

233-302 E-14

SuperSeal™ CAT 5e Receptacle with RJ45 Mating Interface and PC Tail Termination.



233-303 E-16

SuperSeal™ CAT 5e Rececptacle with RJ45 Mating Interface and Solder Cup Termination.



233-304 E-18

SuperSeal™ CAT 5e MIL-STD-1560 Interface Receptacle Adapter with Accessory Threads and Rear RJ45 Jack.



233-305 E-20

SuperSeal™ CAT 5e Quadrax Interface Receptacle Adapter with Accessory Threads and Rear RJ45 Jack.



233-330 E-22

SuperSeal™ CAT 5e and 6A Feed-thru Receptacle with Jack-to-Jack RJ45.



Cable Assemblies E-24

SuperSeal™ CAT 5e Cable Assemblies

FILTER EMI/EMP CONNECTORS

Transient Voltage Suppression (TVS) RJ45 Connectors E-25

Prevents Catastrophic EMP Failure in Military and Commercial Aircraft



244-001 E-27

SuperSeal™ CAT 5e Transient Voltage Suppression, Jam-Nut Receptacle with Standoffs and RJ45 Jack to PC Tail or Solder Cup Termination.



244-002 E-28

SuperSeal™ CAT 5e Transient Voltage Suppression, Wall Mount Receptacle with Standoffs and RJ45 Jack, Mating Interface to PC Tail or Solder Cup.

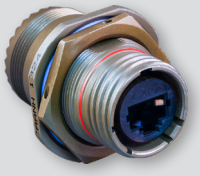

244-003 E-29

SuperSeal™ CAT 5e Transient Voltage Suppression Jam-Nut Receptacle with Accessory Threads and RJ45 Jack, Mating Interface to PC Tail or Solder Cup.



244-004 E-30

SuperSeal™ CAT 5e Transient Voltage Suppression Wall Mount Receptacle with Accessory Threads and RJ45 Jack, Mating Interface to PC Tail or Solder Cup.

B

© 2016 Glenair, Inc • 1211 Air Way, Glendale, CA 91201 • 818-247-6000 • www.glenair.com • U.S. CAGE code 06324 • SuperSeal™ Catalog
Dimensions in Inches (millimeters) are subject to change without notice.



RJ45/USB SUPER SEAL™

SERIES 23

SuperSeal™

Performance Hardened CAT 6A and CAT 5e

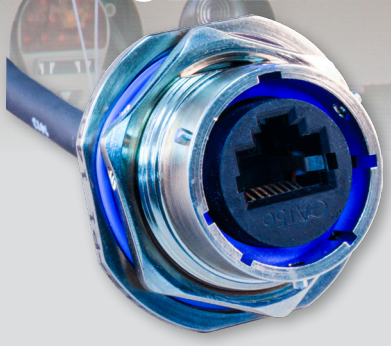

The SuperSeal family of ruggedized Cat 5e and 6A SuperNine connectors are IP68 rated in the mated condition for reliable environmental field use. SuperSeal connectors provide military grade protection and durability for operational use under harsh environmental conditions. SuperSeal connectors benefit from increased operating temperature range, longer life cycle and, significantly improved vibration and shock performance. CAT 5e and 6A RJ45 Ethernet is the standard data communication protocol for gathering, distribution and sharing of C4ISR information to and from command and field units within military, police fire and rescue organizations. SuperSeal provides key performance benefits including superior sealing, grounding, and wire termination for more flexible and reliable communications in rugged field applications.

- **CAT 5e and CAT 6A versions available**
- **IP67 unmated—for complete system protection against water, sand and dust**
- **Highly durable SuperSeal™ insert design, provides enhanced operating temperature, increased life-cycle, and rugged vibration and shock performance**
- **Crimp, solder-cup, PC tail and cable assemblies**

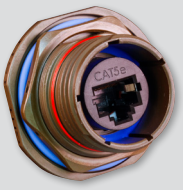

Jam-nut Mount



Wall Mount

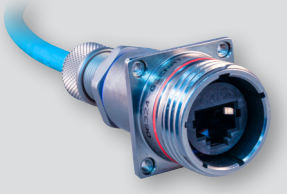

Cable Assemblies

© 2016 Glenair, Inc • 1211 Air Way, Glendale, CA 91201 • 818-247-6000 • www.glenair.com • U.S. CAGE code 06324 • SuperSeal™ Catalog
Dimensions in Inches (millimeters) are subject to change without notice.

MIL-DTL-38999 Series III Type Connectors

Performance Specifications

RJ45 CAT 5e Performance Specifications	
Property	**MIL-DTL-38999 Series III Type**
Material and Finish	
Shell/Coupling and Plating	Complete list of options available in the Material and Finish Options portion of this section
Contacts	PC tails, solder cup, and crimp contacts: copper alloy, gold plated
RJ45 Insulator	PPS
Grommet, Peripheral Seal, Interfacial Seal, O-ring	Blended fluorosilicone/silicone elastomer, 30% silicone per ZZ-R-765, 70% fluorosilicone per MIL-R-25988
Shell Sizes	17 and 19
Shielding Sleeve	Material: Copper alloy Finish: Nickel
Electrical Specifications	
Data Rate	CAT 5e = 10 BASE-T, 100 BASE-TX, and 1000 BASE-T/1000 BASE-TX
Current Rating	Cat 5e, 1.5 Amps
D.W.V.	1000 VDC (700 VAC)
I.R.	500 Mega ohms @ 500 VDC
Frequency	100 MHz, Cat 5e
Wiring	Straight through, Cat 5e
Cabling Length	Up to 100 meters or 100 meters max.
Shield Continuity	Continuous through coupler or continuous coupler to shell
Environmental/Mechanical Performance	
Sealing	IP68 mated condition, IP67 unmated condition
Outgassing	**Mod Code 186S** meets outgassing requirements per ASTM E 595 and meets NASA level 3 screening for standard reliability **Mod Code 928** meets outgassing requirements per UL 94 V-0
Operating Temperature	-40°C to +120°C
Vibration	20g, 3 Axis, 10 - 2000Hz
Mechanical Shock	300 g's
Backshell Interface	MIL-DTL-38999, Designator H
Mating System	Triple-start stub ACME
Mating Cycles	500

RJ45 CAT 6A Performance Specifications	
Property	**MIL-DTL-38999 Series III Type**
Material and Finish	
Shell/Coupling and Plating	Complete list of options available in the Material and Finish Options portion of this section
Contacts	crimp contacts: copper alloy, gold plated
RJ45 Insulator	PPS
Grommet, Peripheral Seal, Interfacial Seal, O-ring	Blended fluorosilicone/silicone elastomer, 30% silicone per ZZ-R-765, 70% fluorosilicone per MIL-R-25988
Shell Sizes	17 and 19
Shielding Sleeve	Material: Copper alloy Finish: Nickel
Electrical Specifications	
Data Rate	CAT 6A = 10G BASE-T
Current Rating	Cat 6A, 1.5 Amps
D.W.V.	1000 VDC (700 VAC)
I.R.	500 Mega ohms @ 500 VDC
Frequency	500 MHz, Cat 6A
Wiring	Straight through, Cat 6A
Cabling Length	Up to 100 meters.
Shield Continuity	Continuous through coupler or continuous coupler to shell
Environmental/Mechanical Performance	
Sealing	IP68 mated condition IP67 unmated condition
Outgassing	**Mod Code 186S** meets outgassing requirements per ASTM E 595 and meets NASA level 3 screening for standard reliability **Mod Code 928** meets outgassing requirements per UL 94 V-0
Operating Temperature	-40°C to +120°C
Vibration	20g, 3 Axis, 10 - 2000Hz
Mechanical Shock	300 g's
Backshell Interface	MIL-DTL-38999, Designator H
Mating System	Triple-start stub ACME
Mating Cycles	500

© 2016 Glenair, Inc • 1211 Air Way, Glendale, CA 91201 • 818-247-6000 • www.glenair.com • U.S. CAGE code 06324 • SuperSeal™ Catalog
Dimensions in Inches (millimeters) are subject to change without notice.

B

MIL-DTL-38999 TYPE, SUPERSEAL RJ45 PANEL CUTOUTS FOR SHELL SIZE 17 AND 19

CODE 1

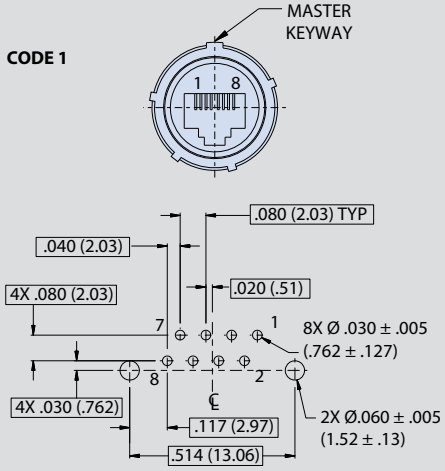

CODE 2

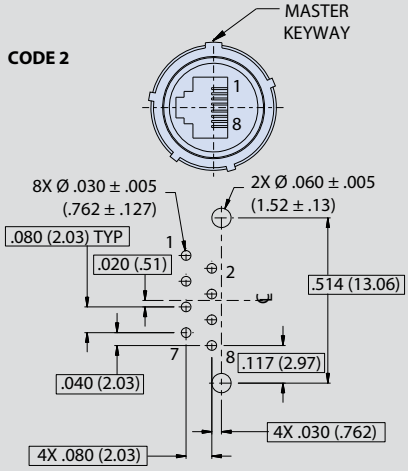

CODE 3

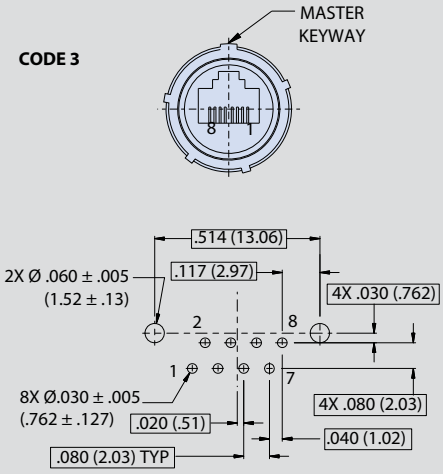

CODE 4

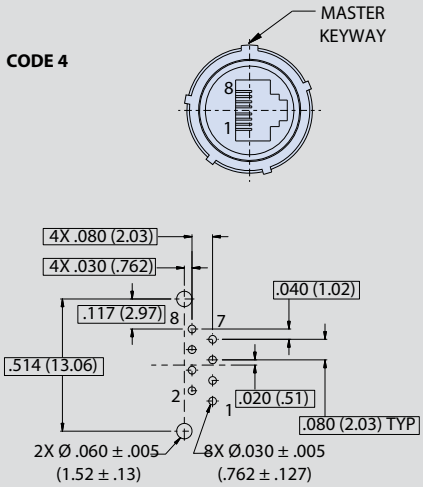

© 2016 Glenair, Inc • 1211 Air Way, Glendale, CA 91201 • 818-247-6000 • www.glenair.com • U.S. CAGE code 06324 • SuperSeal™ Catalog
Dimensions in Inches (millimeters) are subject to change without notice.

MIL-DTL-38999 TYPE, SUPERSEAL RJ45 PANEL CUTOUTS FOR SHELL SIZE 17 AND 19

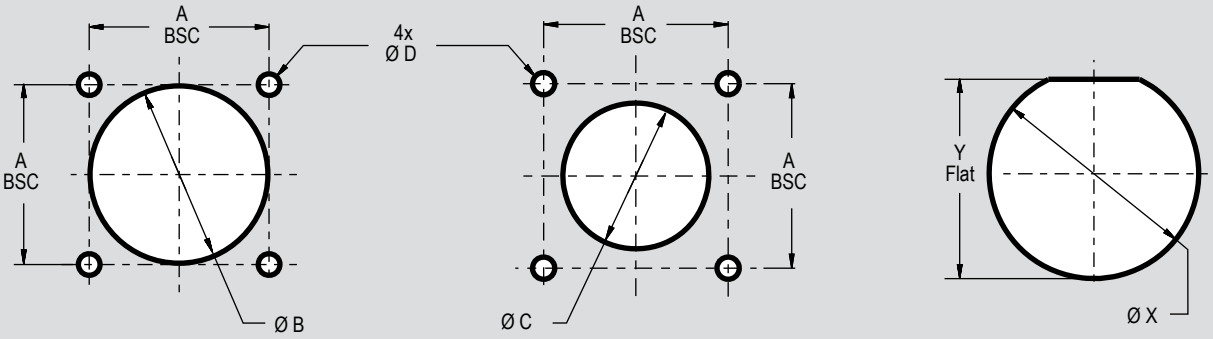

WALL MOUNT
REAR PANEL MOUNT

WALL MOUNT
FRONT PANEL MOUNT

JAM NUT MOUNT

Panel Cut-Out Dimensions						
Shell Size	A Bsc	B Dia Min	C Dia Min	D Holes	X Dia	Y Flat
17	1.062 (26.97)	1.219 (30.96)	1.016 (25.81)	.133 (3.38) .123 (3.12)	1.270 (32.26) 1.260 (32.00)	1.210 (30.73) 1.208 (30.68)
19	1.156 (29.36)	1.297 (32.94)	1.141 (28.98)		1.395 (35.43) 1.385 (35.18)	1.335 (33.91) 1.325 (33.66)

© 2016 Glenair, Inc • 1211 Air Way, Glendale, CA 91201 • 818-247-6000 • www.glenair.com • U.S. CAGE code 06324 • SuperSeal™ Catalog
Dimensions in Inches (millimeters) are subject to change without notice.

B

ASTM E595 Outgassing

MOD CODE 186S

- **SuperSeal® connectors specially processed to meet ASTM E595 outgassing requirements.**
- **Modification code specifies special outgassing bakeout processing.**
- **Meets NASA Screening Level 1 requirements**

Space flight equipment requires low-outgassing components in order to prevent degradation to optics and other sensitive instruments. The space industry has adopted a standardized test procedure, ASTM E595, to evaluate outgassing properties. In the ASTM test, material samples are heated to 125° C at a vacuum of 5 X 10^{-5} torr for 24 hours. The test sample is then weighed to calculate the Total Mass Loss (TML), which may not exceed 1.0% of the total initial mass. A collector plate is used to determine the Collected Volatile Condensable Material (CVCM), which may not exceed 0.1% of the total original specimen mass. SuperSeal™ connectors contain nonmetallic materials such as rubber, plastic, adhesives and potting compounds which can give off gases when subjected to a vacuum or high heat. Unless the connector is specially processed, the TML and CVCM can exceed allowable limits. Glenair is able to offer a bakeout process, 48 hour oven bakeout at 257º F, which assures all materials comply with ASTM E595

UL 94 V-0 Flammability Standard

MOD CODE 928

- **SuperSeal® connectors specially processed to meet UL 94 V-0 flammability standard**

UL 94, the Standard for Safety of Flammability of Plastic Materials for Parts in Devices and Appliances testing is a plastics flammability standard released by Underwriters Laboratories of the USA. The standard classifies plastics according to how they burn in various orientations and thicknesses. From lowest (least flame-retardant) to highest (most flame-retardant) V-0. Burning stops within 10 seconds on a vertical specimen; specimens may not drip flaming particles.

Flip Vertical USB Orientation by 180 degrees

MOD CODE 915

Flip standard, vertically oriented USB designs 180 degrees, allowing pin 1 to be located at the 12 O'clock position.

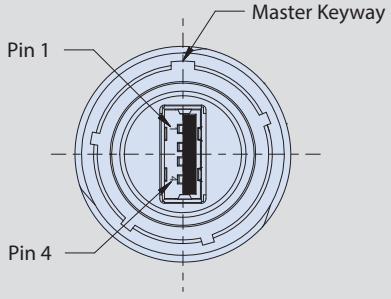

Vertical
With Pin 1 at 12 O'clock

MIL-DTL-38999 Connector and Cable Assembly Material and Finish Codes

Code	Material	Finish	Finish Specification	Hrs. Salt Spray	Electrical Conductivity	Operating Temp. Range	RoHS Compliance
ME	Aluminum	Electroless Nickel	MIL-DTL-24308 Class K	96	Yes		Yes
MT	Aluminum	Nickel PTFE	SAE AMS2454	500	Yes	-65° to +175°C	Yes
NF	Aluminum	Cadmium, Olive Drab	SAE-AMS-QQ-P-416 Type II Class 2 over electroless nickel	500	Yes	-65 to +175°C	No
ZR	Aluminum	Zinc-Nickel, Black	ASTM B841 Grade 5 over electroless nickel	500	Yes	-65 to +175°C	Yes

© 2016 Glenair, Inc • 1211 Air Way, Glendale, CA 91201 • 818-247-6000 • www.glenair.com • U.S. CAGE code 06324 • SuperSeal™ Catalog
Dimensions in Inches (millimeters) are subject to change without notice.

SuperNine MIL-DTL-38999 Series III Type

2330-0131 Connector Receptacle, RJ45 to Solder Cup Termination

Part Number Development								
Sample Part Number	**2330-0131**	**NF**	**00**	**-**	**17**	**5**	**N**	**1**
Series / Basic Part No.	Series 23 SuperNine CODE RED hermetic connector							
Material/Finish	**ME** = Aluminum, Electroless Nickel **NF** = Aluminum, Cadmium O. D. Over Electroless Nickel **MA** = Aluminum, Electroless Nickel, Matte Finish **ZN** = Aluminum, Zinc NI , Olive Drab **ZR** = Aluminum, Zinc NI, Black (Tri- Valent CR) **AB**= Marine Bronze, None (Clean Only)							
Connector Style	**00** = Receptacle ,wall mount, with slotted holes **D0** = Receptacle, wall mount, with round holes **07** = Receptacle, jam nut							
Inline Shielded RJ45	**G** = Inline shielded and grounded to the shell **-** = Inline shielded RJ45							
Shell Size	**17**, **19**							
RJ45 Category	**5** = CAT 5e **6A** = CAT 6A							
Alternate Polarization	**A**, **B**, **C**, **D**, **E**, **N** = Normal							
RJ45 Orientation Option	**1**, **2**, **3**, **4**							

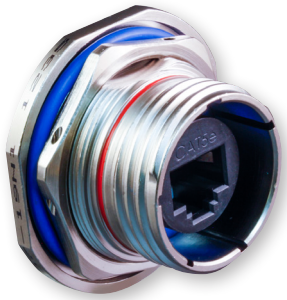

NOTES

1. Material / Finish
   - Shell & Jam Nut: See Table I
   - O-Rings & Seals: Fluorosilicone
   - RJ45 Coupler Housing: UL94V-0 compliant polymer
   - Contacts: Copper alloy / gold plated
   - Sealing Compound: Polymer encapsulant
2. Performances:
   - Leak Rate: 1 X 10^-7 cc/s max helium, 1 ATM
   - Electrical: Current rating: 1.5 AMP
   - D.W.V.: 1000 VDC, 2 mA max
   - I.R.: 500 Mega ohms @ 500 VDC
   - Operating Temperature Range: -40°C to +120°C
3. Glenair connectors are designed to mate with any QPL manufacturer's MIL-DTL-38999, Series III mating plug having the same shell size and polarization, opposite gender RJ45.
4. Receptacle connector designed to meet IP68 unmated condition.
5. Flange gaskets are not included with wall mounted receptacles. If required, select gasket from Glenair drawing 239-204.

© 2016 Glenair, Inc • 1211 Air Way, Glendale, CA 91201 • 818-247-6000 • www.glenair.com • U.S. CAGE code 06324 • SuperSeal™ Catalog
Dimensions in Inches (millimeters) are subject to change without notice.

CODE RED

2330-0131-00 - WALL MOUNT RECEPTACLE WITH SLOTTED HOLES

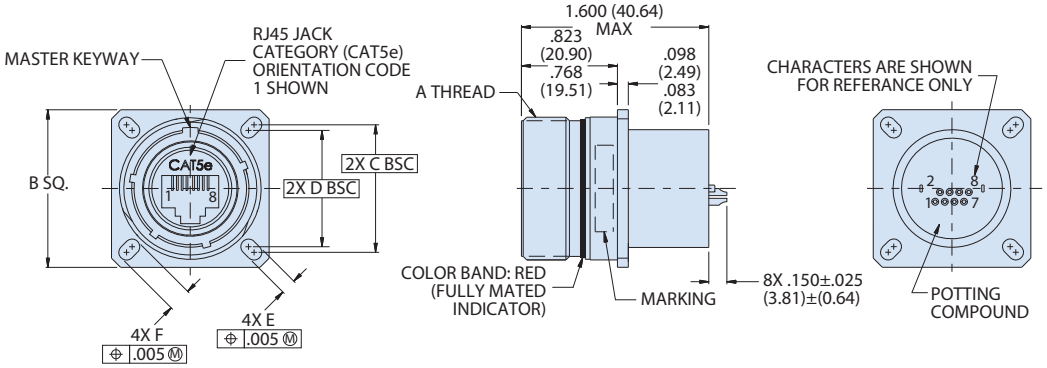

Table II Wall Mount							
Shell Size	A Thread	B SQ	C BSC	D BSC	E	F	ØG HOLES
17	1.1875-.1P-.3L-TS-2A	1.323 (33.60) 1.299 (32.99)	1.062 (26.97)	0.969 (24.61)	0.136 (3.45) 0.120 (3.05)	0.202 (5.13) 0.186 (4.72)	0.136 (3.45) 0.120 (3.05)
19	1.2500-.1P-.3L-TS-2A	1.449 (36.80) 1.425 (36.20)	1.156 (29.36)	1.062 (26.97)	0.136 (3.45) 0.120 (3.05)	0.202 (5.13) 0.186 (4.72)	0.136 (3.45) 0.120 (3.05)

2330-0131-D0 - WALL MOUNT RECEPTACLE WITH ROUND HOLES

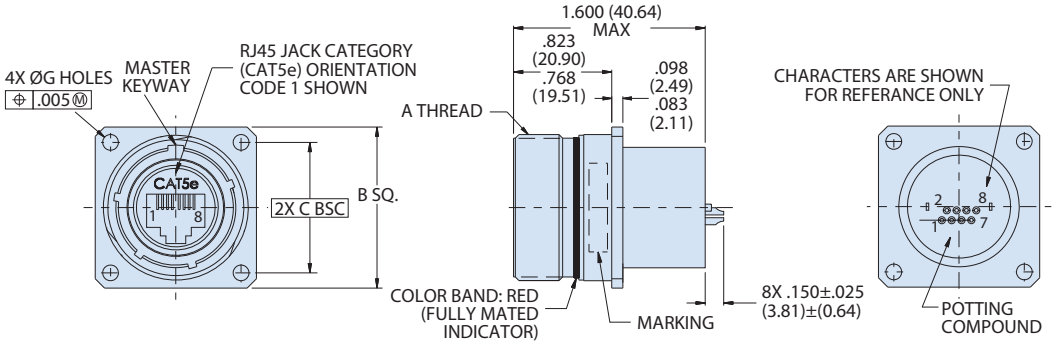

B

2330-0131-07 - JAM NUT MOUNT RECEPTACLE

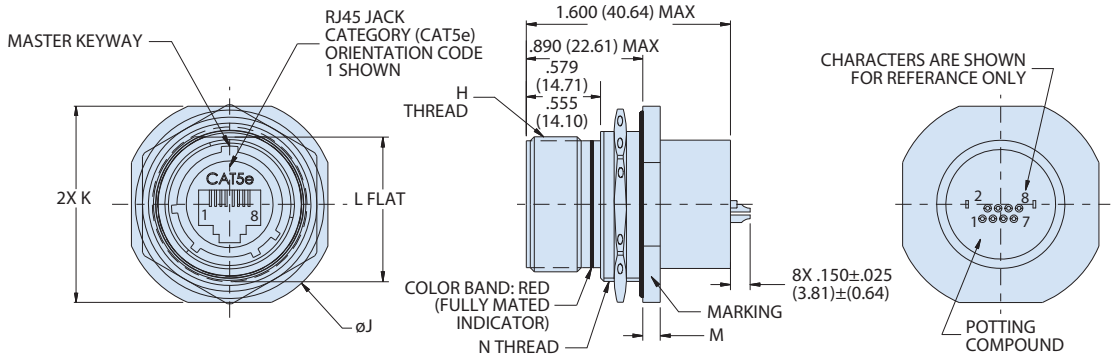

Table III Jam Nut Mount						
Shell Size	A Thread	ØJ	K	L FLAT	M	N THREAD
17	1.1875-.1P-.3L-TS-2A	1.764 (44.81) 1.740 (44.20)	1.642 (41.71) 1.610 (40.89)	1.191 (30.25) 1.181 (30.00)	0.122 (3.10) 0.083 (2.11)	M32 X 1.0-6g 0.100R
19	1.2500-.1P-.3L-TS-2A	1.949 (49.50) 1.925 (48.90)	1.827 (46.41) 1.795 (45.59)	1.316 (33.43) 1.306 (33.17)	0.153 (3.89) 0.114 (2.90)	M35 X 1.0-6g 0.100R

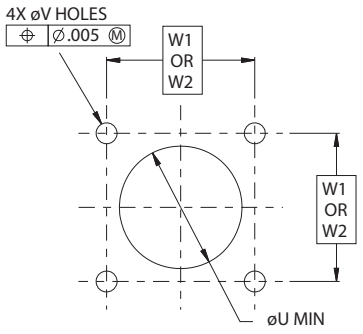

FRONT PANEL MOUNTING

RECOMMENDED MOUNTING HOLES

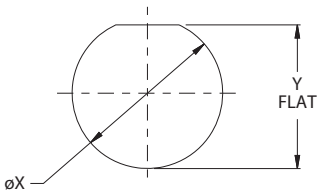

RECOMMENDED PANEL CUT OUT

Table IV Panel Cutout and Wall Mount						
Shell Size	ØU MIN	ØV HOLES	W1 BSC	W2 BSC	ØX	Y FLAT
17	1.016 (25.81)	0.133 (3.38) 0.123 (3.12)	1.062 (26.97)	0.969 (24.61)	1.270 (32.26) 1.260 (32.00)	1.210 (30.73) 1.200 (30.48)
19	1.141 (28.98)		1.156 (29.36)	1.062 (26.97)	1.395 (35.43) 1.385 (35.18)	1.335 (33.91) 1.325 (33.65)

© 2016 Glenair, Inc • 1211 Air Way, Glendale, CA 91201 • 818-247-6000 • www.glenair.com • U.S. CAGE code 06324 • SuperSeal™ Catalog
Dimensions in Inches (millimeters) are subject to change without notice.

RJ45 ORIENTATION OPTIONS (PARTIAL VIEWS SHOWN)

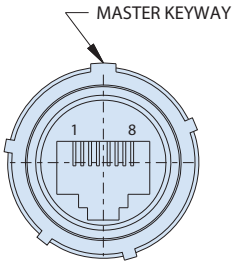

CODE 1
(FRONT)

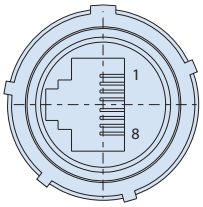

CODE 2
(FRONT)

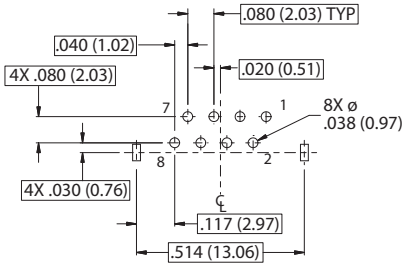

SOLDER CUP ORIENTATION
(REAR)

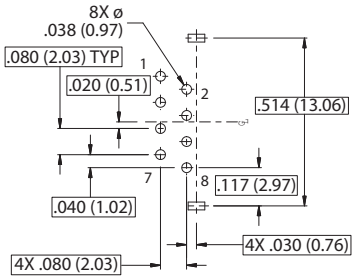

SOLDER CUP ORIENTATION
(REAR)

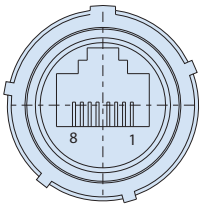

CODE 3
(FRONT)

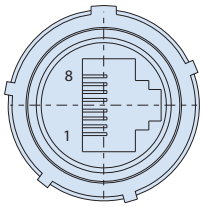

CODE 4
(FRONT)

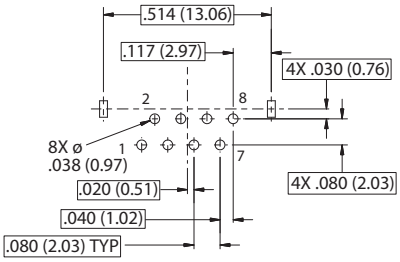

SOLDER CUP ORIENTATION
(REAR)

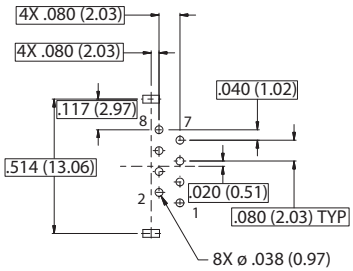

SOLDER CUP ORIENTATION
(REAR)

MIL-DTL-38999 Series III Type Connectors

233-308 Coupler with integrated banding platform



Part Number Development								
Sample Part Number	**233-308**	**NF**	**00**	**G**	**-17**	**5H**	**N**	**1**
Basic Number	**233-308**							
Finish	See Material and Finish table							
Connector Style[1]	See Table V							
Insert-to-Shell Grounding	**–** = Inline shielded RJ45 **G** = Inline shielded and grounded to the shell ("G" option only with receptacle)							
Shell Size	**17** or **19**							
RJ45 Category	**5H** = CAT 5e **6A** = CAT 6A (CAT 6A receptacle only, for use with 233-312)							
Alternate Key Position[1]	Per MIL-DTL-38999 **A**, **B**, **C**, **D**, **E**, **N** = **Normal**							
RJ45 Orientation	**1**, **2**, **3**, or **4**							

Material and Finish	
M	Aluminum/Electroless Nickel
NF	Aluminum/Cadmium, Olive Drab, over Electroless Nickel (500 hour salt spray)
MT	Aluminum/Nickel PTFE
ME	Aluminum/Electroless Nickel (96 hour salt spray)
MA	Aluminum/ Electroless Nickel, Matte Finish (96 hour salt spray)
TZ	Aluminum/ Tin-Zinc, Green-Gold
ZN	Aluminum/ Zinc NI, Olive Drab
ZR	Aluminum/Black Zinc-Nickel (Tri-Valent Cr)
XM	Composite/Electroless Nickel
XMT	Composite/Nickel-PTFE
XO	Composite/No Finish
XW	Composite/Cadmium, Olive Drab, Over Electroless Nickel (500 Hour Salt Spray)
Z1	Stainless Steel/Passivate
ZL	Stainless Steel/ Electro-Deposited Nickel
ZW	Stainless Steel/Cad Olive Drab Over Nickel
AB	Marine Bronze/None (Clean Only)

Connector Style	
00	Wall mount receptacle with slotted holes[3]
D0	Wall mount receptacle with round holes
CM	Wall mount receptacle with metric clinch nuts
CS	Wall Mount Receptacle with standard clinch nuts
07	rear panel mount, jam nut receptacle
05	Inline Receptacle
G6	Plug

RJ45 Orientation Options (Plug Face)

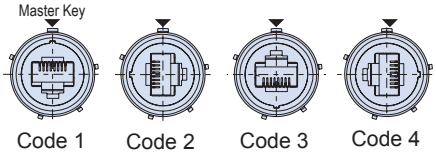

RJ45 Orientation Options (Receptacle Face)

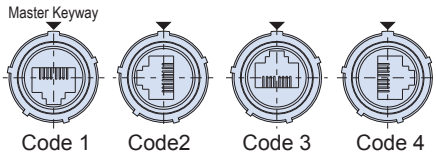

NOTES

1. Interpret drawing per ASME y14.5m - 2009.
2. Material/finishes:
   - Shell, barrel, coupling nut, jam nut - see Table I (Composite coupling nut no plating required).
   - Insulators: High grade rigid dielectric/N.A.
   - Contacts: Copper alloy, gold plated
   - Seals: Silicone based elastomer
   - RJ45 coupler housing: UL94V-0 compliant ABS or PPS
   - Hardware: Stainless steel/passivated
3. RJ45 jack/plug specifications:
   - RJ45 coupler maintains shield continuity
   - Wiring: straight through
   - Rohs compliant
   - Electrical: current rating: 1.5 Amp
   - D.W.V.: 1000 VDC, 2 MA MAX.
   - I.R.: 500 Mega ohms @ 500 VDC
   - Operating temperature range: -40°c to +120°c
4. Receptacle connector designed to meet IP67 sealing unmated condition.

G6 - PLUG

G6 Plug Dimensions								
Shell Size	Ø A Max		Ø B		ØFF		ØGG	
	in	mm	in	mm	in	mm	in	mm
17	1.406	35.71	1.276 1.268	32.41 32.21	.945	24.00	.990	25.15
19	1.516	38.51	1.382 1.374	35.10 34.90	1.050	26.67	1.100	27.94

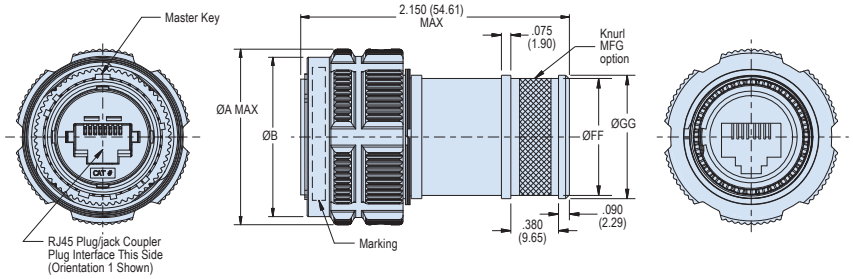

© 2016 Glenair, Inc • 1211 Air Way, Glendale, CA 91201 • 818-247-6000 • www.glenair.com • U.S. CAGE code 06324 • SuperSeal™ Catalog
Dimensions in Inches (millimeters) are subject to change without notice.

MIL-DTL-38999 Series III Type Connectors

233-308 Coupler with integrated banding platform

00 - WALL MOUNT RECEPTACLE WITH SLOTTED HOLES

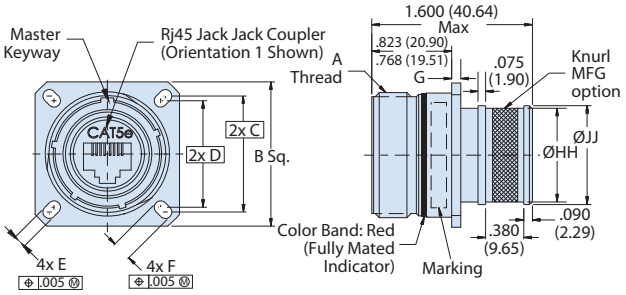

CS - WALL MOUNT RECEPTACLE WITH STANDARD CLINCH NUTS

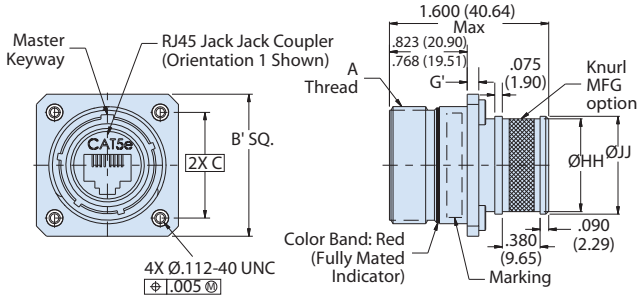

D0 - WALL MOUNT RECEPTACLE WITH ROUND HOLES

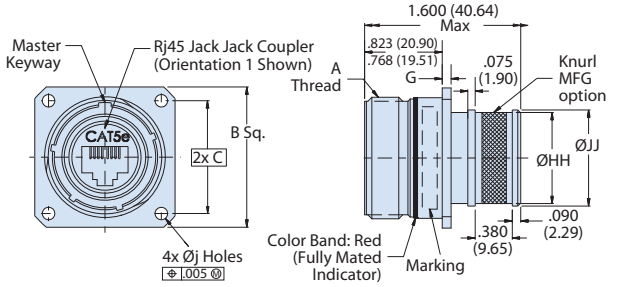

07 - JAM NUT MOUNT RECEPTACLE (SEE TABLE III)

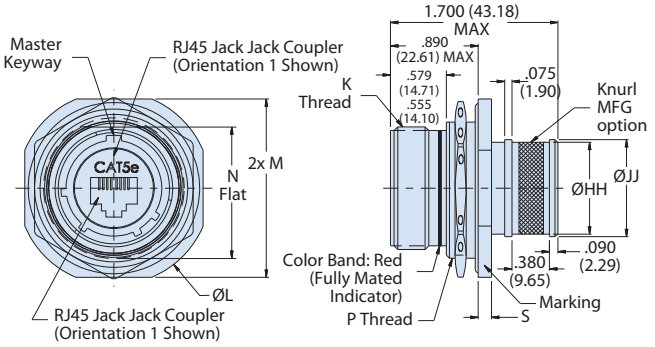

CM - WALL MOUNT RECEPTACLE WITH METRIC CLINCH NUTS

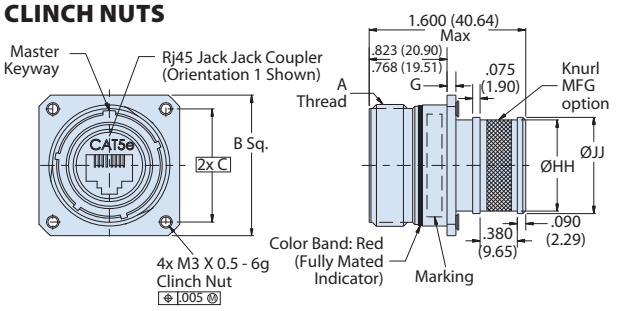

05 - INLINE RECEPTACLE (SEE TABLE III)

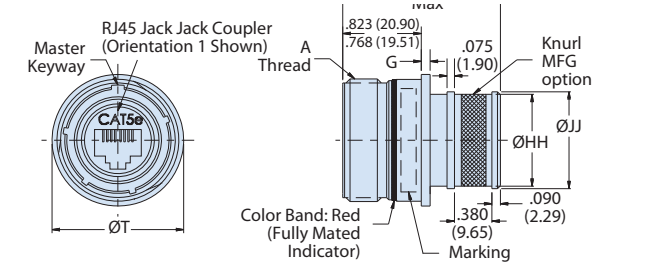

Wall Mount Receptacle Dimensions												
Shell Size	A Thread	B SQ	B' SQ	C BSC	D BSC	E	F	G	G'	Ø HH	Ø JJ	Ø J Holes
17	1.1875-.1P-.3L-TS-2A	1.323 (33.60) 1.299 (32.99)	1.437 (36.50) 1.397 (35.48)	1.062 (26.97)	0.969 (24.61)	0.136 (3.45)	0.202 (5.13)	0.098 (2.49)	0.122 0.083	0.960 (24.38)	1.022 (25.96)	0.136 (3.45)
19	1.2500-.1P-.3L-TS-2A	1.449 (36.80) 1.425 (36.20)	1.531 (38.89) 1.491 (37.87)	1.156 (29.36)	1.062 (26.97)	0.120 (3.05)	0.186 (4.72)	0.083 (2.11)	0.153 0.114	1.062 (26.97)	1.125 (28.58)	0.120 (3.05)

Jam Nut Mount and Inline Receptacle Dimensions								
Shell Size	K Thread	Ø L	M	N Flat	P Thread	R Thread	S	Ø T Max
17	1.1875-.1P-.3L-TS-2A	1.764 (44.81) 1.740 (44.20)	1.642 (41.71) 1.610 (40.89)	1.191 (30.25) 1.181 (30.00)	M32 X 1.0-6g 0.100R	M25 X 1.0-6g 0.100R	0.122 (3.10) 0.083 (2.11)	1.406 (35.71)
19	1.2500-.1P-.3L-TS-2A	1.949 (49.50) 1.925 (48.90)	1.827 (46.41) 1.795 (45.59)	1.316 (33.43) 1.306 (33.17)	M35 X 1.0-6g 0.100R	M28 X 1.0-6g 0.100R	0.153 (3.89) 0.114 (2.90)	1.516 (38.51)

© 2016 Glenair, Inc • 1211 Air Way, Glendale, CA 91201 • 818-247-6000 • www.glenair.com • U.S. CAGE code 06324 • SuperSeal™ Catalog
Dimensions in Inches (millimeters) are subject to change without notice.

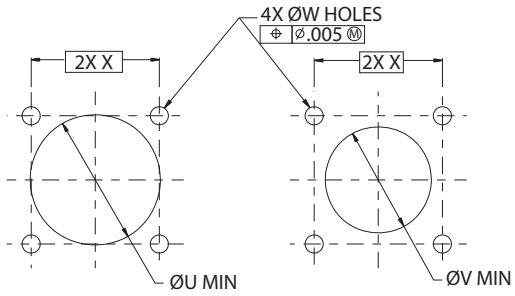

Back Panel Mounting Front Panel Mounting

Recommended Mounting Holes
Panel Thickness .228 Max (See Table IV)

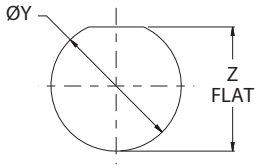

Recommended Panel Cut Out
Panel Thickness .126-.062 (See Table IV)

PANEL CUTOUT & WALL MOUNT												
Shell Size	Ø U Min		Ø V Min		W Holes		X BSC		Ø Y		Z Flat	
	in	mm	in	mm	in	mm	in	mm	in	mm	in	mm
17	1.219	30.96	1.016	25.81	0.133 0.123	3.38 3.12	1.062	26.97	1.270 1.260	32.26 32.00	1.210 1.200	30.73 30.48
19	1.297	32.94	1.141	28.98			1.156	29.36	1.395 1.385	35.43 35.18	1.335 1.325	33.91 33.65

© 2016 Glenair, Inc • 1211 Air Way, Glendale, CA 91201 • 818-247-6000 • www.glenair.com • U.S. CAGE code 06324 • SuperSeal™ Catalog
Dimensions in Inches (millimeters) are subject to change without notice.

MIL-DTL-38999 Series III Type Connectors

233-312 Plug with accessory threads

Part Number Development										
Sample Part Number	**233-312**	**NF**	**G6**	**-**	**17**	**6A**	**N**	**1**		
Series / Basic Part No.	**233-312** = Cat 6A interface for D38999 type shell									
Material/Finish	**NF** = Aluminum/cadmium olive drag **MT** = Aluminum/nickel PTFE **ME** = Aluminum/electroless nickel **ZR** = Aluminum/zinc-nickel Contact factory for additional options									
Connector Style	**G6** = Plug									
Plug Options	(-) = CAT 6A (28 AWG) **A** = CAT 6A (22-24 AWG)									
Shell Size	**17** and **19**									
RJ45 Category	**6A** = Cat 6A									
Alternate Polarization	**A**, **B**, **C**, **D**, **E**, **N** = Normal; Per MIL-DTL-38999									
RJ45 Orientation	**1**, **2**, **3**, **4**									
Strain Relief Style	**A** = Accessory threads (accepts standard D38999 backshells) **T** = Shrink boot **M** = Over mold **Omit** for standard									
Cable OD	**W** = Large cable OD up to .400 (10.16) **Omit** for cable OD .187/.312 (4.75/7.92)									

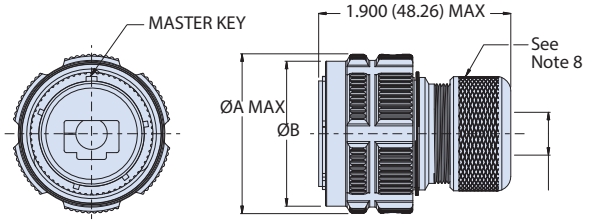

Strain Relief Style: Standard

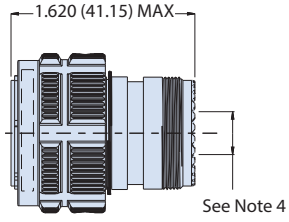

Strain Relief Style: A - Accessory Threads

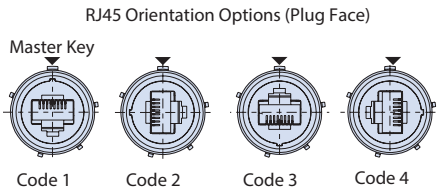

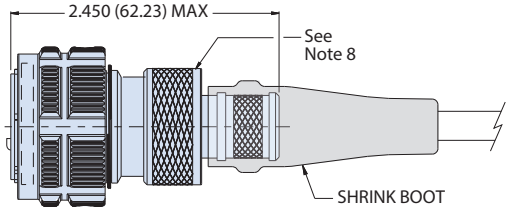

Strain Relief Style: T - Shrink Boot

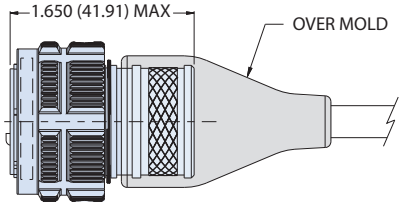

STRAIN RELIEF STYLE: M - OVER MOLD

Dimensions		
Shell Size	**ØA Max**	**ØB**
17	1.406 (35.71)	1.276 (32.41) 1.268 (32.21)
19	1.516 (38.51)	1.382 (35.10) 1.374 (34.90)

NOTES

1. Material/finish:
   - Barrel, coupling nut: see part number development. Composite coupling nut no plating required.
   - Insulators: high grade rigid dielectric/ N.A.
   - Seals: silicone based elastomer
   - Hardware: stainless steel/passivated
2. RJ45 plug specifications:
   - RJ45 plug cable maintains shield continuity
   - RoHS compliant

Electrical
- Current rating: 1 amp
- D.W.V.: 1000V DC/min
- I.R.: 500 Mega ohms minimum @ 1000V DC
- Operating temperature range: -20°C to +85°C

3. Meets IP68 in mated condition
4. Design accommodates cable outside diameter 0.187 (4.750) to 0.400 (10.16)
5. Design accommodates CAT 6A RJ45 modular plugs:
   (-) = CAT 6A, 28 AWG
   A = CAT 6A, 22-24 AWG
6. See assembly instructions AI233-312 for cable termination and connector assembly. Assembly instructions to be kitted with each shipment
7. CAT 6A modular plugs packaged loose for each plug connector.
8. Recommended torque value for different cable outside diameter.

Cable OD (in)	.187/.225	.225/.275	.275/.312	.312/.400
Torque (in/lbs)	20.6	18.3	12.6	10

© 2016 Glenair, Inc • 1211 Air Way, Glendale, CA 91201 • 818-247-6000 • www.glenair.com • U.S. CAGE code 06324 • SuperSeal™ Catalog
Dimensions in Inches (millimeters) are subject to change without notice.

MIL-DTL-38999 Series III Type Connectors

233-300 Coupler with accessory threads



Plug
Front View



Receptacle
Front View



Receptacle
Rear View

Material and Finish[1]	
NF	Aluminum/Cadmium, Olive Drab
ME	Aluminum/Electroless Nickel
MT	Aluminum/Nickel PTFE
ZR	Aluminum/Black Zinc-Nickel

NOTES

1. See Section A for alternate key/keyway positions and panel cutout dimensions
2. G option is inline shielded and grounded to shell, available for receptacle only
3. Front panel mount only
4. Meets IP67 in unmated condition, IP68 mated
5. For shrink boot see part number 770-028
6. Receptacle has RJ45 jack. Plug has RJ45 plug to jack

Part Number Development									
Sample Part Number	**233-300**	**NF**	**00**	**G**	**17**	**5H**	**N**	**1**	**T**
Basic Number	**233-300**								
Finish	See Material and Finish table								
Connector Style[1]	See Connector Style table								
Insert-to-Shell Grounding	**–** = Inline shielded RJ45 insert **G** = Shielded and grounded to shell[2]								
Shell Size	**17** or **19**								
RJ45 Category	**5H** = CAT 5e **6A** = CAT 6A (CAT 6A receptacle only, for use with 233-312)								
Alternate Key Position[1]	Per MIL-DTL-38999 **A**, **B**, **C**, **D**, **E**, **N** = **Normal**								
RJ45 Orientation	**1**, **2**, **3**, or **4**								
Shrink Boot	**T** = Part No. 770-028; see accessory section. (Omit for None)								

Connector Style[1]	
00	Wall mount receptacle with slotted holes[3]
01	Wall mount receptacle with slotted holes and metal cable gland
05	Inline Receptacle
07	rear panel mount, jam nut receptacle
08	In-line receptacle with metal cable gland
D0	Wall mount receptacle with round holes
D1	Wall mount receptacle with round holes and metal gland
CM	Wall mount receptacle with metric clinch nuts
CG	Wall mount receptacle with metric clinch nuts and metal gland
CS	Wall Mount Receptacle with standard clinch nuts
G6	plug
G9	Plug with metal cable gland[5]

RJ45 Orientation Options (Plug Face)

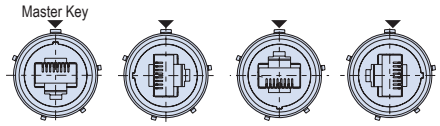

RJ45 Orientation Options (Receptacle Face)

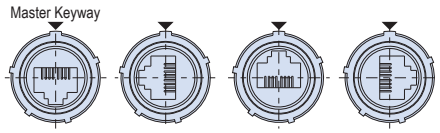

All external dimensions, features, etc. compliant with D38999/20, /24, &/26. Consult factory for additional information.

G6 - PLUG WITH INTEGRAL SHRINK BOOT

G6 and G7 - plug Dimensions				
Shell Size	A Dia Max		B Dia	
	in	mm	in	mm
17	1.406	35.71	1.276 1.268	32.41 32.21
19	1.516	38.51	1.382 1.374	35.10 34.90

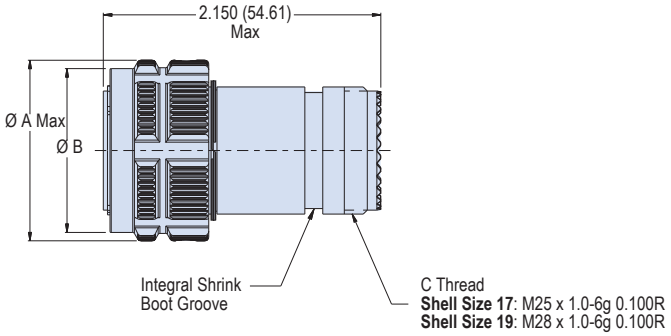

© 2016 Glenair, Inc • 1211 Air Way, Glendale, CA 91201 • 818-247-6000 • www.glenair.com • U.S. CAGE code 06324 • SuperSeal™ Catalog
Dimensions in Inches (millimeters) are subject to change without notice.

07 - REAR PANEL MOUNT JAM NUT AND 05 OR 08 - INLINE RECEPTACLES

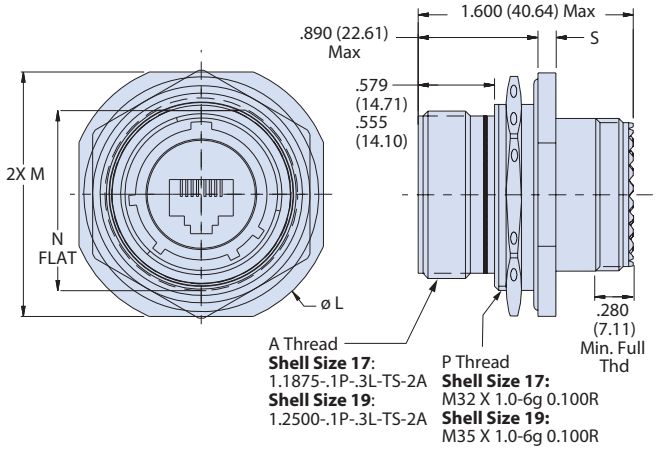

07 Jam Nut Receptacle (mating face and side view)

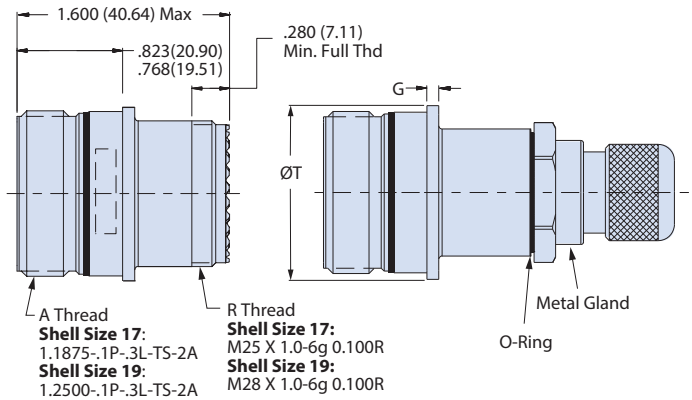

05 Inline with Acceesory Threads and 08 Inline with Metal Gland (side view only)

00, 01, DO, D1, CM AND CG - WALL MOUNT RECEPTACLES WITH ACCESSSORY THREADS OR METAL GLAND

00, 01 - Wall Mount Receptacle with Slotted Holes (Mating Face)

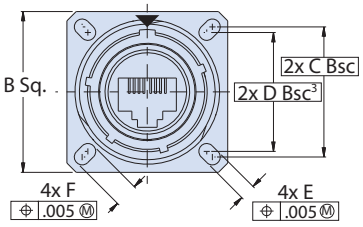

D0, D1 - Wall Mount Receptacle with Round Holes (Mating Face)

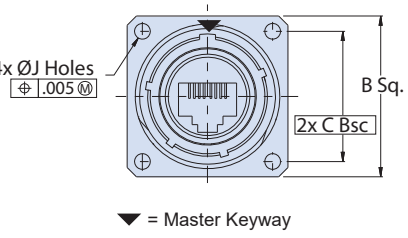

CM Metric and CS Standard - Wall Mount Receptacles (Mating Face and Side View)

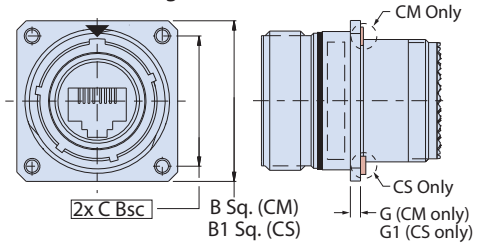

Note:
See CM & CS style for side view and style specific dimensions.

00, D0, CM - Wall Mount Receptacle

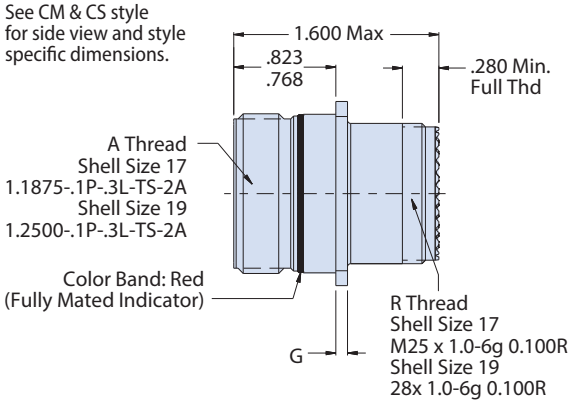

Rear View

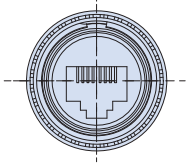

For all 233-300 plug and receptacle styles. Position rotates relative to Code (Code 1 shown)

01, D1, CG - Wall Mount Receptacle with Metal Gland

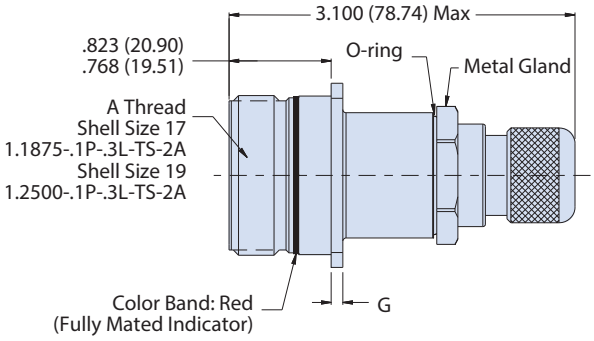

Jam Nut and Inline Receptacle Dimensions

Shell Size	ØL	M	N	S	ØT Max
17	1.764 (44.81) 1.740 (44.20)	1.642 (41.71) 1.610 (40.89)	1.191 (30.25) 1.181 (30.00)	.122 (3.09) .083 (2.11)	1.275 (32.39)
19	1.949 (49.50) 1.925 (48.90)	1.827 (46.41) 1.795 (45.59)	1.316 (33.43) 1.306 (33.17)	.153 (3.89) .114 (2.90)	1.337 (33.96)

Wall Mount Receptacle Dimensions

Shell Size	B Sq	B1 Sq	C Bsc	D Bsc[3]	E	F	G	G1	ØJ Holes
17	1.323 (33.60) 1.299 (32.99)	1.437 (34.50) 1.397 (35.48)	1.062 (26.97)	.969(24.61)	.136 (3.45)	.202 (5.13)	.098 (2.49)	.122 (3.10) .083 (.58)	.136 (3.45)
19	1.449 (36.80) 1.425 (36.20)	1.531 (38.89) 1.491 (37.87)	1.156 (29.36)	1.062 (26.97)	.120 (3.05)	.186 (4.72)	.083 (2.11)	.153 (3.89) .144 (3.66)	.120 (3.05)

© 2016 Glenair, Inc • 1211 Air Way, Glendale, CA 91201 • 818-247-6000 • www.glenair.com • U.S. CAGE code 06324 • SuperSeal™ Catalog
Dimensions in Inches (millimeters) are subject to change without notice.

MIL-DTL-38999 Series III Type Connectors

233-301 Plug and Receptacles with crimp removable contacts and accessory threads



Receptacle front View



Receptacle rear View

Part Number Development									
Sample Part Number	**233-301**	**NF**	**00**	**G**	**17**	**5H**	**N**	**1**	**T**
Basic Number	**233-301**								
Finish	See Material and Finish table								
Connector Style	See Connector Style table								
Insert-to-Shell Grounding	**–** = Inline shielded RJ45 insert **G** = Shielded and grounded to shell[2]								
Shell Size	**17** or **19**								
RJ45 Category	**5H** = CAT 5e For Cat 6A applications consult factory								
Alternate Key Position[1]	Per MIL-DTL-38999 **A**, **B**, **C**, **D**, **E**, **N** = Normal								
RJ45 Orientation	**1**, **2**, **3**, or **4**								
Shrink Boot	**T** = Part No. 770-028 (Omit for None)								

Connector Style[1]	
00	Wall mount receptacle with slotted holes
05	Inline Receptacle
07	rear panel mount, jam nut receptacle
D0	Wall mount receptacle with round holes
CM	Wall mount receptacle with metric clinch nuts
CS	Wall mount receptacle with metric clinch nuts
G6	plug

Material and Finish	
NF	Aluminum/Cadmium, Olive Drab
ME	Aluminum/Electroless Nickel
MT	Aluminum/Nickel PTFE
ZR	Aluminum/Black Zinc-Nickel

RJ45 Orientation Options (Plug Face)

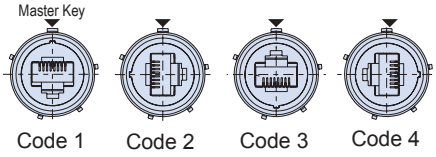

RJ45 Orientation Options (Receptacle Face)

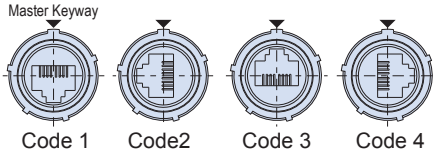

NOTES

1. See Section A for alternate key/keyway positions and panel cutout dimensions
2. G option is inline shielded and grounded to shell, available for receptacle only
3. Front panel mount only
4. Crimp removable size 22 pin contacts (M39029/58-360) supplied loose
5. Meets IP67 in unmated condition and IP68 mated condition
6. For shrink boot see part number 770-028
7. Receptacle connector has RJ45 jack

All external dimensions, features, etc. compliant with D38999/20, /24, &/26. Consult factory for additional information.

G6 PLUG WITH ACCESSORY THREADS

Plug Dimensions				
Shell Size	A Dia Max		B Dia	
	in	mm	in	mm
17	1.406	35.71	.928 .922	23.57 23.42
19	1.516	38.51	1.033 1.027	26.24 26.09

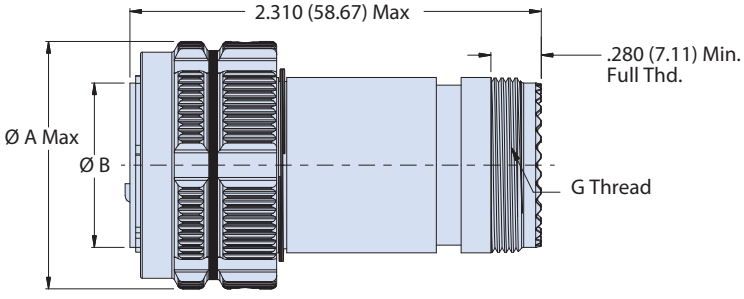

© 2016 Glenair, Inc • 1211 Air Way, Glendale, CA 91201 • 818-247-6000 • www.glenair.com • U.S. CAGE code 06324 • SuperSeal™ Catalog
Dimensions in Inches (millimeters) are subject to change without notice.

05 - INLINE AND 07 - REAR PANEL MOUNT, JAM NUT RECEPTACLE WITH ACCESSORY THREADS

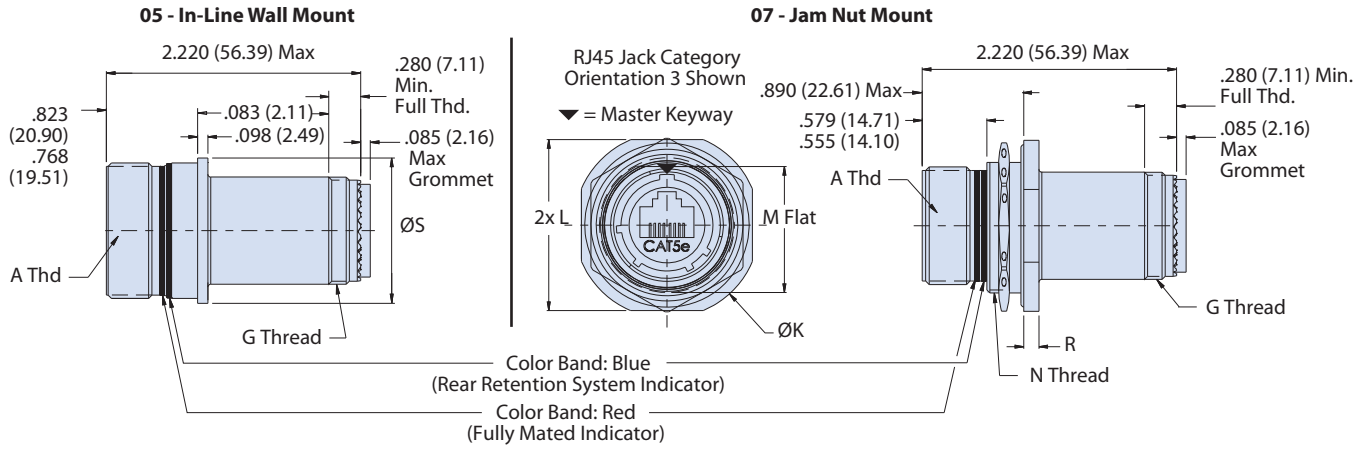

00, D0 AND CM - WALL MOUNT RECEPTACLES WITH ACCESSORY THREADS

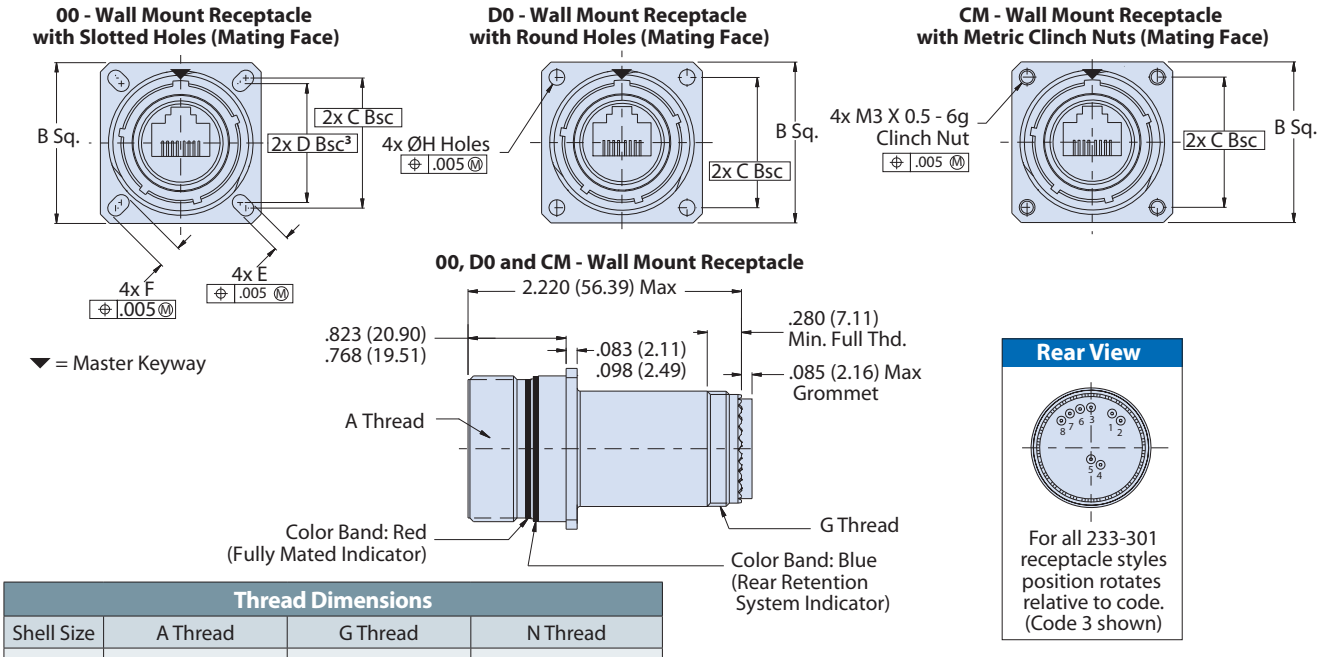

Thread Dimensions			
Shell Size	A Thread	G Thread	N Thread
17	1.1875-.1P-.3L-TS-2A	M25 x 1.0-6g 0.100R	M32 x 1.0-6g 0.100R
19	1.2500-.1P-.3L-TS-2A	M28x 1.0-6g 0.100R	M35 x 1.0-6g 0.100R

In-line and Jam Nut Receptacle Dimensions					
Shell Size	ØK	L	M	R	ØS
17	1.764 (44.81) 1.740 (44.20)	1.642 (41.71) 1.610 (40.89)	1.191 () 1.181 ()	.122 (3.09) .083 (2.11)	1.275 (32.39)
19	1.949 (49.50) 1.925 (48.90)	1.827 (46.51) 1.795 (45.59)	1.316 () 1.305 ()	.153 (3.89) .114 (2.90)	1.337 (33.96)

Wall Mount Receptacle Dimensions						
Shell Size	B Sq	C Bsc	D Bsc³	E	F	Ø H Holes
17	1.323 (33.60) 1.299 (32.99)	1.062 (26.97)	.969 (24.61)	.136 (3.45)	.202 (5.13)	.136 (3.45)
19	1.449 (36.80) 1.425 (36.20)	1.156 (29.36)	1.062 (26.97)	.120 (3.05)	.186 (4.72)	.120 (3.05)

© 2016 Glenair, Inc • 1211 Air Way, Glendale, CA 91201 • 818-247-6000 • www.glenair.com • U.S. CAGE code 06324 • SuperSeal™ Catalog
Dimensions in Inches (millimeters) are subject to change without notice.

MIL-DTL-38999 Series III Type Connectors

233-314 Plug and Receptacles with crimp removable contacts and integrated banding porch

Part Number Development									
Sample Part Number	**233-314**	**NF**	**00**	**G**	**17**	**5H**	**N**	**1**	**T**
Basic Number	**233-314**								
Finish	See Material and Finish table								
Connector Style	See Connector Style table								
Insert-to-Shell Grounding	**–** = Inline shielded RJ45 insert **G** = Shielded and grounded to shell[2]								
Shell Size	**17** or **19**								
RJ45 Category	**5H** = CAT 5e, high-temp. For Cat 6A applications consult factory								
Alternate Key Position[1]	Per MIL-DTL-38999 **A**, **B**, **C**, **D**, **E**, **N** = Normal								
RJ45 Orientation	**1**, **2**, **3**, or **4**								
Shrink Boot	**T** = Part No. 770-028 (Omit for None)								

Connector Style[1]	
00	Wall mount receptacle with slotted holes
05	Inline Receptacle
07	rear panel mount, jam nut receptacle
D0	Wall mount receptacle with round holes
CM	Wall mount receptacle with metric clinch nuts
G6	plug

Material and Finish	
NF	Aluminum/Cadmium, Olive Drab
ME	Aluminum/Electroless Nickel
MT	Aluminum/Nickel PTFE
ZR	Aluminum/Black Zinc-Nickel

RJ45 Orientation Options (Plug Face)

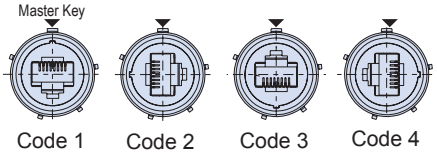

RJ45 Orientation Options (Receptacle Face)

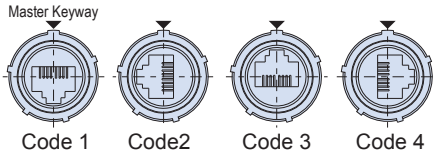

NOTES

1. See Section A for alternate key/keyway positions and panel cutout dimensions
2. G option is inline shielded and grounded to shell, available for receptacle only
3. Front panel mount only
4. Crimp removable size 22 pin contacts (M39029/58-360) supplied loose
5. Meets IP67 in unmated condition and IP68 mated condition
6. For shrink boot see part number 770-028
7. Receptacle connector has RJ45 jack

All external dimensions, features, etc. compliant with D38999/20, /24, &/26. Consult factory for additional information.

G6 PLUG WITH BANDING PORCH

Plug Dimensions								
Shell Size	A Dia Max		B Dia		FF Dia		GG Dia	
	in	mm	in	mm	in	mm	in	mm
17	1.406	35.71	1.276 1.268	32.41 32.21	.945	24.00	.990	25.15
19	1.516	38.51	1.382 1.374	35.10 34.90	1.050	26.67	1.100	27.94

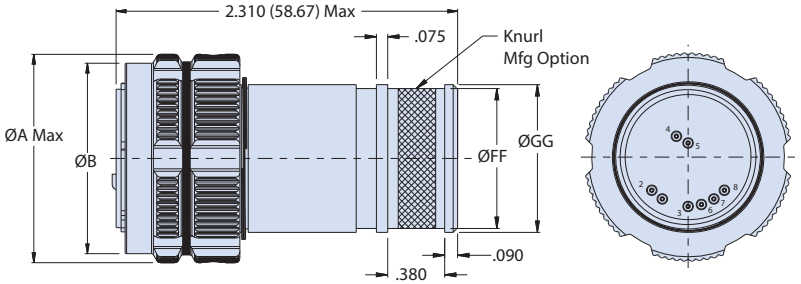

© 2016 Glenair, Inc • 1211 Air Way, Glendale, CA 91201 • 818-247-6000 • www.glenair.com • U.S. CAGE code 06324 • SuperSeal™ Catalog
Dimensions in Inches (millimeters) are subject to change without notice.

05 - INLINE AND 07 - REAR PANEL MOUNT, JAM NUT RECEPTACLE WITH BANDING PORCH

05 - In-Line Wall-Mount

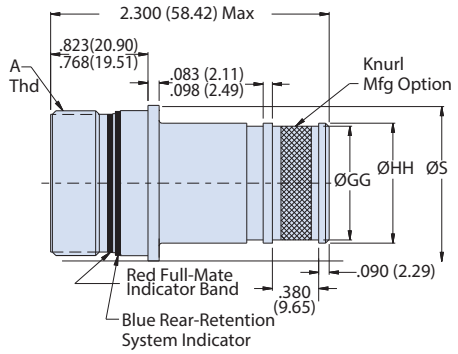

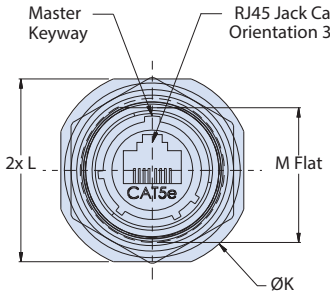

07 - Jam-Nut Mount

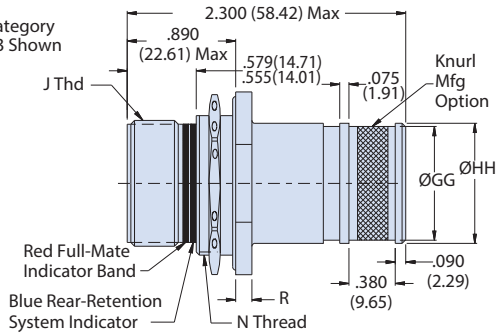

00, D0 AND CM - WALL MOUNT RECEPTACLES WITH ACCESSORY THREADS

00 - Wall Mount Receptacle with Slotted Holes (Mating Face)

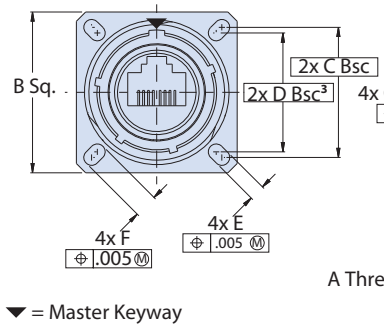

D0 - Wall Mount Receptacle with Round Holes (Mating Face)

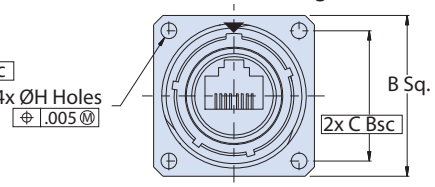

CM - Wall Mount Receptacle with Metric Clinch Nuts (Mating Face)

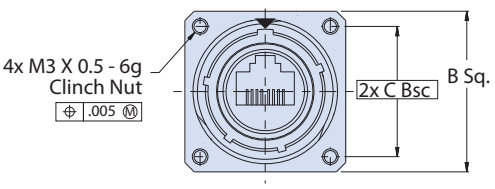

00, D0 and CM - Wall Mount Receptacle

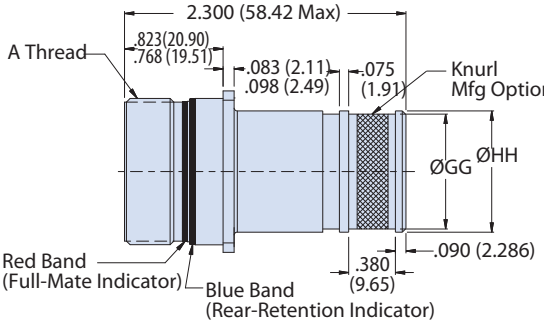

Rear View

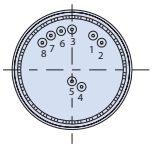

For all 233-314 receptacle styles position rotates relative to code. (Code 3 shown)

Wall Mount Receptacle Dimensions								
Shell Size	B Sq	C Bsc	D Bsc³	E	F	ØGG	ØHH	Ø H Holes
17	1.323 (33.60) 1.299 (32.99)	1.062 (26.97)	.969 (24.61)	.136 (3.45) .120 (3.05)	.202 (5.13) .186 (4.72)	.960 (24.38) 1.062 (26.97)	1.022 (25.96) 1.125 (28.58)	.136 (3.45) .120 (3.05)
19	1.449 (36.80) 1.425 (36.20)	1.156 (29.36)	1.062 (26.97)					

In-line and Jam Nut Receptacle Dimensions					
Shell Size	ØK	L	M Flat	R	ØS Max
17	1.764 (44.81) 1.740 (44.20)	1.642 (41.71) 1.610 (40.89)	1.191 (30.25) 1.181 (30.00)	.122 (3.09) .083 (2.11)	1.406 (35.71)
19	1.949 (49.50) 1.925 (48.90)	1.827 (46.51) 1.795 (45.59)	1.316 (33.43) 1.305 (33.15)	.153 (3.89) .114 (2.90)	1.516 (38.51)

Thread Dimensions		
Shell Size	A and J Threads	N Thread
17	1.1875-.1P-.3L-TS-2A	M32 x 1.0-6g 0.100R
19	1.2500-.1P-.3L-TS-2A	M35 x 1.0-6g 0.100R

© 2016 Glenair, Inc • 1211 Air Way, Glendale, CA 91201 • 818-247-6000 • www.glenair.com • U.S. CAGE code 06324 • SuperSeal™ Catalog
Dimensions in Inches (millimeters) are subject to change without notice.

MIL-DTL-38999 Series III Type Connectors

233-302 Receptacle with PC tails

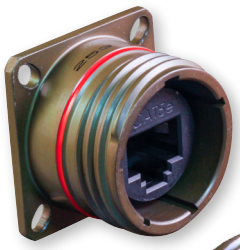

Receptacle front View



Receptacle rear View

Part Number Development								
Sample Part Number	**233-302**	**NF**	**00**	**G**	**17**	**5H**	**N**	**1**
Basic Number	**233-302**							
Finish	See Material and Finish table							
Connector Style[1]	See Connector Style table							
Insert-to-Shell Grounding	**–** = Inline shielded RJ45 insert **G** = Shielded and grounded to shell[2]							
Shell Size	**17** or **19**							
RJ45 Category	**5H** = CAT 5e For Cat 6A applications consult factory							
Alternate Key Position[1]	Per MIL-DTL-38999 **A**, **B**, **C**, **D**, **E**, **N** = Normal							
RJ45 Orientation	**1**, **2**, **3**, or **4**							

RJ45 ORIENTATION OPTIONS AND PCB LAYOUT

CODE 1

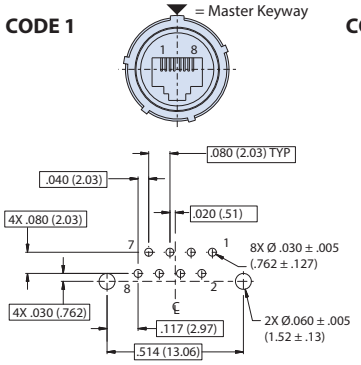

CODE 2

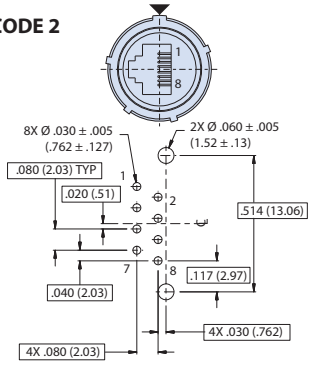

CODE 3

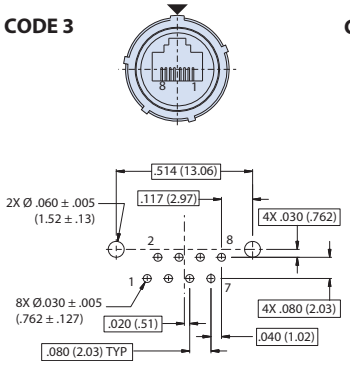

CODE 4

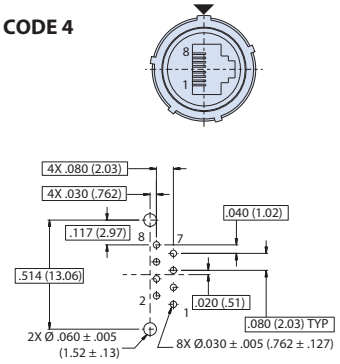

Connector Style[1]	
00	Wall mount receptacle with slotted holes
07	rear panel mount, jam nut receptacle
D0	Wall mount receptacle with round holes
CM	Wall mount receptacle with metric clinch nuts

Material and Finish	
NF	Aluminum/Cadmium, Olive Drab
ME	Aluminum/Electroless Nickel
MT	Aluminum/Nickel PTFE
ZR	Aluminum/Black Zinc-Nickel

Jam Nut Dimensions								
Shell Size	Dia K		L		M Flat		P	
	in	mm	in	mm	in	mm	in	mm
17	1.764 1.740	44.81 44.20	1.642 1.610	41.71 40.89	1.191 1.181	30.25 30.00	.090 .080	2.29 2.03
19	1.949 1.925	49.50 48.90	1.827 1.795	46.41 45.59	1.316 1.306	33.43 33.17	.150 .140	3.81 3.56

Wall Mount Receptacle Dimensions																
Shell Size	B Sq		C BSC		D BSC[3]		E		F		G1		Ø H Holes	
	In	mm	In	mm	In	mm	In	mm	In	mm	In	mm	In	mm	In	mm
17	1.323 1.299	33.60 32.99	1.062	26.97	.969	24.61	.136 .120	3.45 3.05	.202 .186	5.13 4.72	.122 .083	3.10 2.11	0.136 0.120	3.45 3.05
19	1.449 1.425	36.80 36.20	1.156	29.36	1.062	26.97					.153 .114	3.89 2.90		

NOTES

1. See Section A for alternate key/keyway positions and panel cutout dimensions
2. G option is inline shielded and grounded to shell, available for receptacle only
3. Front panel mount only
4. Meets IP67 in unmated condition, IP68 mated
5. Receptacle connector has RJ45 jack

© 2016 Glenair, Inc • 1211 Air Way, Glendale, CA 91201 • 818-247-6000 • www.glenair.com • U.S. CAGE code 06324 • SuperSeal™ Catalog
Dimensions in Inches (millimeters) are subject to change without notice.

07 - REAR PANEL MOUNT, JAM NUT RECEPTACLE

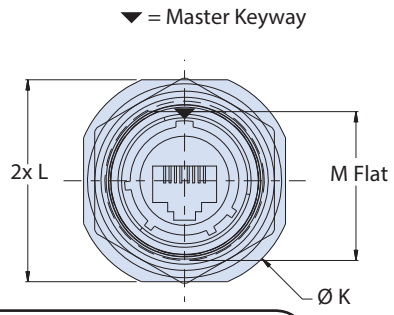

All external dimensions, features, etc. compliant with D38999/20, /24, &/26. Consult factory for additional information.

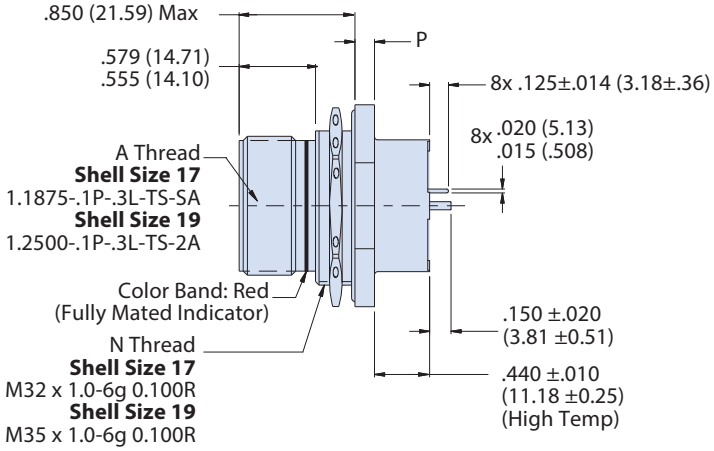

00, DO AND CM - WALL MOUNT RECEPTACLES

00 - Wall Mount Receptacle with Slotted Holes (Mating Face)

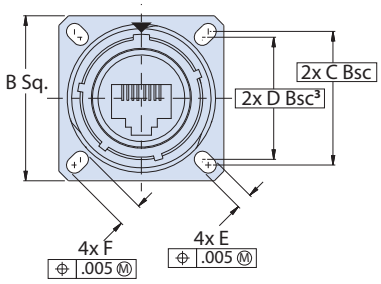

D0 - Wall Mount Receptacle With Round Holes (Mating Face)

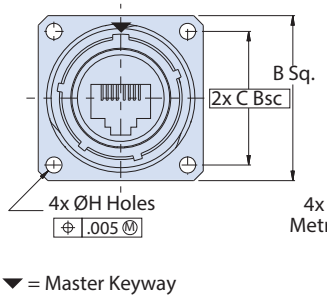

CM & CS - Wall Mount Receptacle With Metric/Std Clinch Nuts (Mating Face)

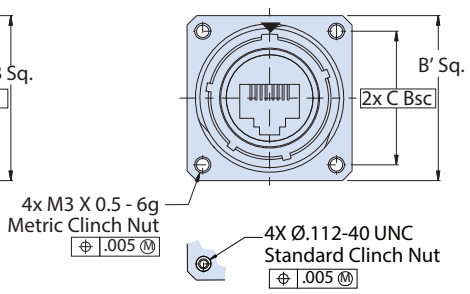

00 and D0 - Wall Mount Receptacle (Side View)

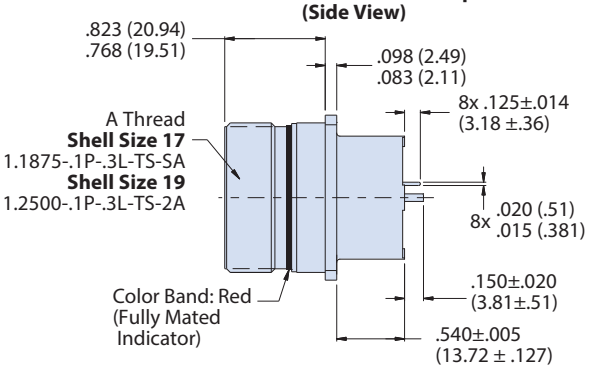

CS and CM - Wall Mount Receptacle (Side View)

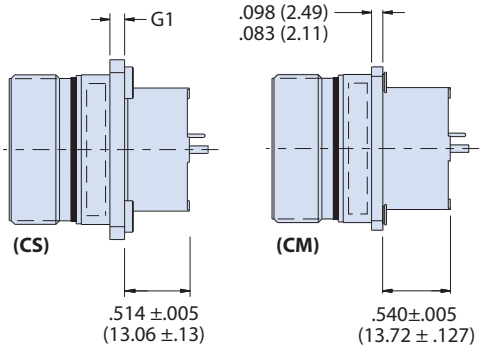

Rear View

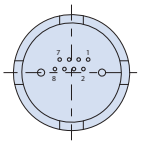

For all 233-302 receptacle styles position rotates relative to code (Code 1 shown)

© 2016 Glenair, Inc • 1211 Air Way, Glendale, CA 91201 • 818-247-6000 • www.glenair.com • U.S. CAGE code 06324 • SuperSeal™ Catalog
Dimensions in Inches (millimeters) are subject to change without notice.

MIL-DTL-38999 Series III Type Connectors

233-303 Receptacle with solder cups



Part Number Development								
Sample Part Number	**233-303**	**NF**	**00**	**G**	**17**	**5H**	**N**	**1**
Basic Number	**233-303**							
Finish	See Material and Finish table							
Connector Style[1]	See Connector Style table							
Insert-to-Shell Grounding	**–** = Inline shielded RJ45 insert **G** = Shielded and grounded to shell[2]							
Shell Size	**17** or **19**							
RJ45 Category	**5H** = CAT 5e For Cat 6A applications consult factory							
Alternate Key Position[1]	Per MIL-DTL-38999 **A**, **B**, **C**, **D**, **E**, **N** = Normal							
RJ45 Orientation	**1**, **2**, **3**, or **4**							

RJ45 ORIENTATION OPTIONS

CODE 1 = Master Keyway

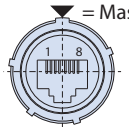

CODE 2

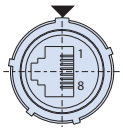

CODE 3

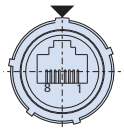

CODE 4

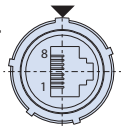

Jam Nut Dimensions								
Shell Size	Ø J		K		L Flat		M	
	in	mm	in	mm	in	mm	in	mm
17	1.764 1.740	44.81 44.20	1.642 1.610	41.71 40.89	1.191 1.181	30.25 30.00	.122 .083	3.10 2.11
19	1.949 1.925	49.50 48.90	1.827 1.795	46.41 45.59	1.316 1.306	33.43 33.17	.153 .114	3.89 2.90

Wall Mount Receptacle Dimensions												
Shell Size	B Sq		C Bsc		D Bsc		E		F		Ø G Holes	
	In	mm	In	mm	In	mm	In	mm	In	mm	In	mm
17	1.323 1.299	33.60 32.99	1.062	26.97	.969	24.61	.136 .120	3.45 3.05	.202 .186	5.13 4.72	0.136 0.120	3.45 3.05
19	1.449 1.425	36.80 36.20	1.156	29.36	1.062	26.97						

Material and Finish	
NF	Aluminum/Cadmium Olive Drab
ME	Aluminum/Electroless Nickel
MT	Aluminum/Nickel PTFE
ZR	Aluminum/Black Zinc-Nickel

Connector Style	
00	Wall mount receptacle with slotted holes
07	rear panel mount, jam nut receptacle
D0	Wall mount receptacle with round holes
CM	Wall mount receptacle with metric clinch nuts

All external dimensions, features, etc. compliant with D38999/20, /24, &/26. Consult factory for additional information.

NOTES

1. See Section A for alternate key/keyway positions and panel cutout dimensions
2. G option is inline shielded and grounded to shell, available for receptacle only
3. Front panel mount only
4. Meets IP67 in unmated condition, IP68 mated
5. Receptacle connector has RJ45 jack
6. Materials and finishes
   - Shell, jam nut: Al alloy/optional
   - Seals: Silicone based elastomer
   - RJ45 coupler housing: UL94V-0 compliant ABS or PPS
   - Contacts: Copper alloy, gold plated
   - Hardware: Stainless steel/passivated

© 2016 Glenair, Inc • 1211 Air Way, Glendale, CA 91201 • 818-247-6000 • www.glenair.com • U.S. CAGE code 06324 • SuperSeal™ Catalog
Dimensions in Inches (millimeters) are subject to change without notice.

Rev. 01.14.22

07 - REAR PANEL MOUNT, JAM NUT RECEPTACLE

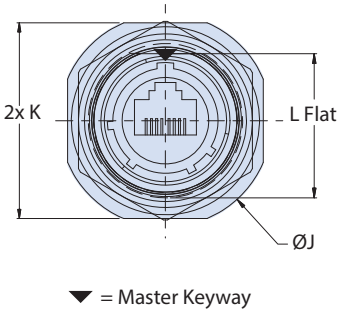

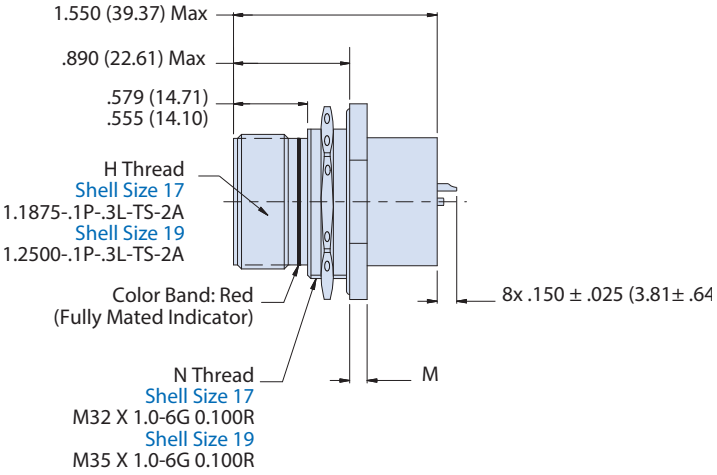

00, DO AND CM - WALL MOUNT RECEPTACLES

00 - Wall Mount Receptacle
with Slotted Holes (Mating Face)

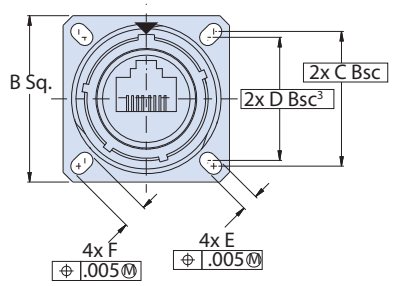

D0 - Wall Mount Receptacle
with Round Holes (Mating Face)

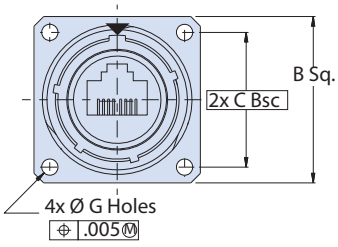

CM - Wall Mount Receptacle
with Metric Clinch Nuts (Mating Face)

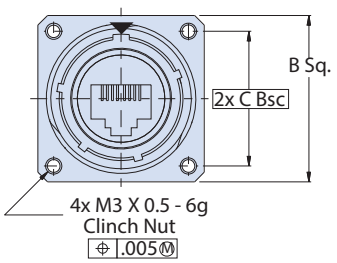

= Master Keyway

00 and D0 - Wall Mount Receptacle
(Side View)

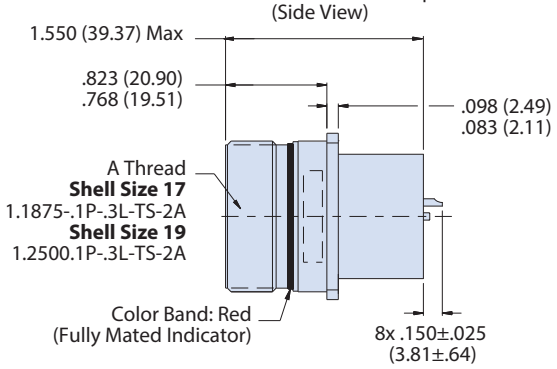

00 and D0 - Wall Mount Receptacle
(Side View)

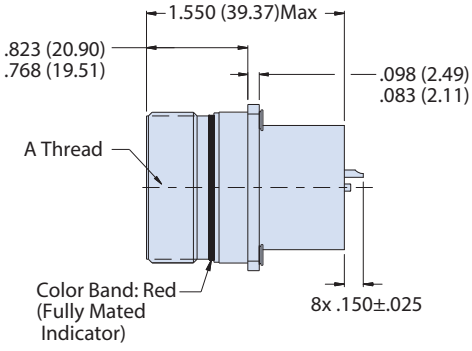

Rear View

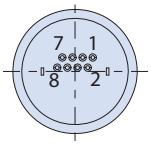

For All 233-303 Receptacle Styles Position Rotates Relative To Code (Code 1 Shown)

© 2016 Glenair, Inc • 1211 Air Way, Glendale, CA 91201 • 818-247-6000 • www.glenair.com • U.S. CAGE code 06324 • SuperSeal™ Catalog
Dimensions in Inches (millimeters) are subject to change without notice.

Rev. 01.14.22

MIL-DTL-38999 Series III Type Connectors

233-304 Plug and receptacle adapter with accessory thread

RJ45/USB SUPER SEAL™

Glenair®

B

Part Number Development										
Sample Part Number	**233-304**	**NF**	**00**	**17**	**G**	**35**	**P**	**5H**	**N**	**T**
Basic Number	**233-304**									
Finish	See Material and Finish table									
Connector Style[1]	See Connector Style table									
Shell Size	**17**[6] consult factory for other shell sizes									
Insert-to-Shell Grounding[2]	**–** = Inline shielded RJ45 insert **G** = Shielded and grounded to shell									
Insert Arrangement	Per MIL-STD-1560; **17-26** or **17-35**[6]									
Contact Style	**P** = Pin **S** = Socket									
RJ45 Category	**5H** = CAT 5e For Cat 6A applications consult factory									
Alternate Key Position[1]	Per MIL-DTL-38999 **A**, **B**, **C**, **D**, **E**, **N** = Normal									
Shrink Boot	**T** = Part No. 770-028 (Omit for None)									

NOTES

1. See Section A for alternate key/keyway positions and panel cutout dimensions
2. G option is inline shielded and grounded to shell, available for receptacle only
3. Connector style 00 with slotted hole is front panel mount only
4. Meets IP67 in unmated condition, IP68 mated
5. Both plug and receptacle connectors have rear RJ45 jack
6. Consult factory for alternate insert arrangements

Material and Finish	
NF	Aluminum/Cadmium Olive Drab
ME	Aluminum/Electroless Nickel
MT	Aluminum/Nickel PTFE
ZR	Aluminum/Black Zinc-Nickel

Connector Style[1]	
00	Wall mount receptacle with slotted holes[3]
05	Inline Receptacle
07	rear panel mount, jam nut receptacle
D0	Wall mount receptacle with round holes
G6	plug
CM	Wall mount receptacle with metric clinch nuts

Thread Dimensions			
Shell Size	A Thread	G Thread	N Thread
17	1.1875-.1P-.3L-TS-2A	M25 x 1.0-6g 0.100R	M32 x 1.0-6g 0.100R
19	1.2500-.1P-.3L-TS-2A	M28x 1.0-6g 0.100R	M35 x 1.0-6g 0.100R

Wall Mount Receptacle Dimensions												
Shell Size	B Sq		C BSC		D BSC		E		F		Ø H Holes	
	In	mm	In	mm	In	mm	In	mm	In	mm	In	mm
17	1.323 1.299	33.60 32.99	1.062	26.97	.969	24.61	.136 .120	3.45 3.05	.202 .186	5.13 4.72	.136 .120	3.45 3.05
19	1.449 1.425	36.80 36.20	1.156	29.36	1.062	26.97						

Jam Nut and Inline Dimensions										
Shell Size	Ø K		L		M Flat		R		S	
	in	mm	in	mm	in	mm	In	mm	In	mm
17	1.764 1.740	44.81 44.20	1.642 1.610	41.71 40.89	1.191 1.181	30.25 30.00	.122 .083	3.10 2.11	1.406	35.71
19	1.949 1.925	49.50 48.90	1.827 1.795	46.41 45.59	1.316 1.306	33.43 33.17	.153 .114	3.89 2.90	1.516	38.51

Wiring Diagram for Ethernet 10base-T & 100 Base-TX
17-35 or (17-26 in parenthesis) Arrangement

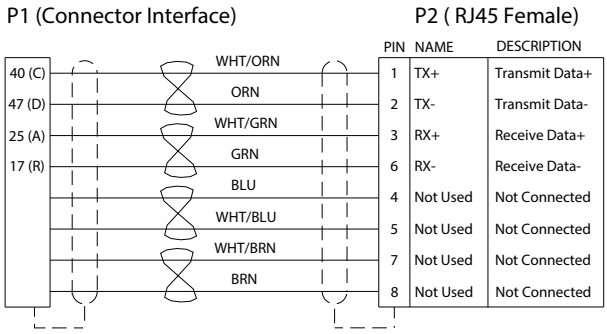

Wiring Diagram for Ethernet 1000base-T (Gigabit Ethernet)
17-35 or (17-26 in parenthesis) Arrangement

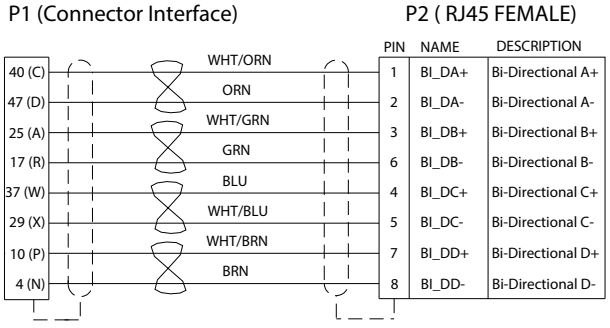

Color Codes Per EIA/TIA 568B

© 2016 Glenair, Inc • 1211 Air Way, Glendale, CA 91201 • 818-247-6000 • www.glenair.com • U.S. CAGE code 06324 • SuperSeal™ Catalog
Dimensions in Inches (millimeters) are subject to change without notice.

G6 - PLUG WITH ACCESSORY THREADS

Plug Dimensions				
Shell Size	Ø A		Ø B	
	in	mm	in	mm
17	1.406	35.71	.928 .922	23.57 23.42
19	1.516	38.51	1.033 1.027	26.24 26.09

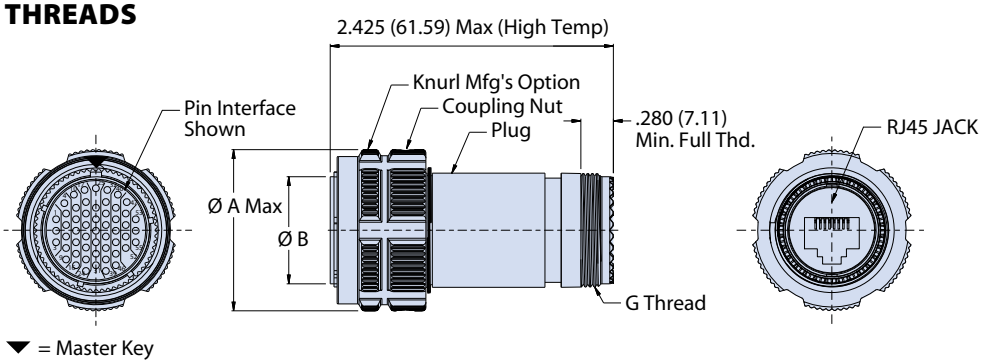

07 - REAR PANEL MOUNT, JAM NUT AND 05 - INLINE RECEPTACLE WITH ACCESSORY THREADS

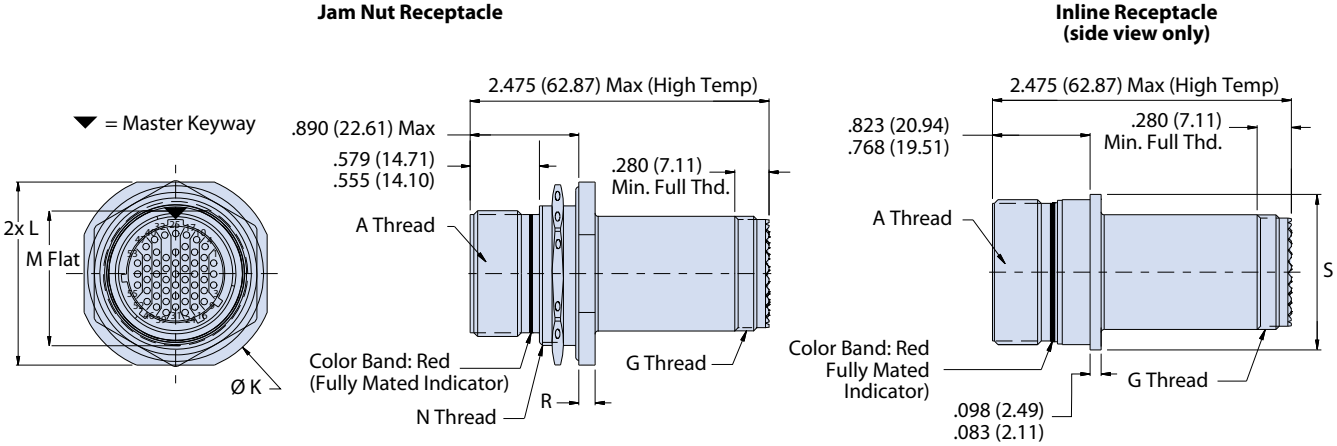

00, DO AND CM - WALL MOUNT RECEPTACLES WITH ACCESSORY THREADS

00 - Wall Mount Receptacle with Slotted Holes (Mating Face)

D0 - Wall Mount Receptacle With Round Holes (Mating Face)

CM - Wall Mount Receptacle With Metric Clinch Nuts (Mating Face)

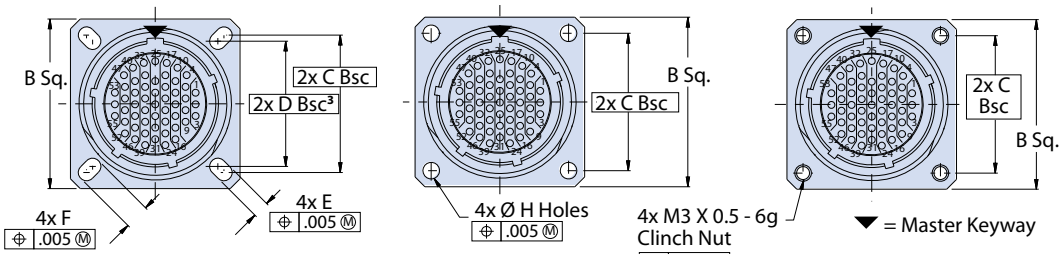

All external dimensions, features, etc. compliant with D38999/20, /24, &/26. Consult factory for additional information.

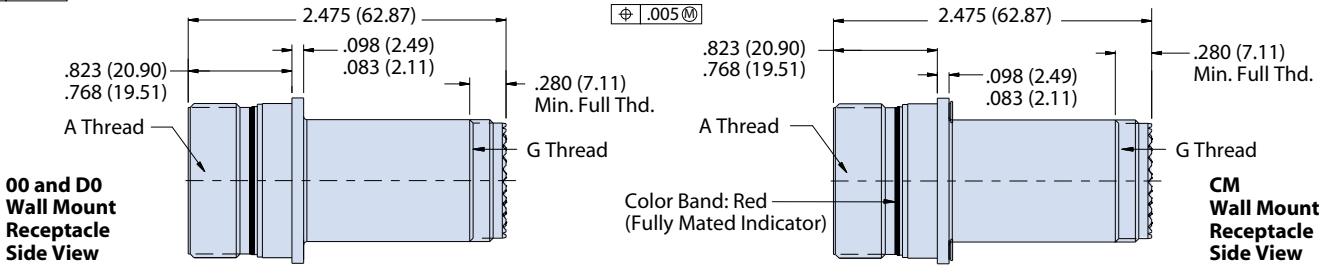

© 2016 Glenair, Inc • 1211 Air Way, Glendale, CA 91201 • 818-247-6000 • www.glenair.com • U.S. CAGE code 06324 • SuperSeal™ Catalog
Dimensions in Inches (millimeters) are subject to change without notice.

MIL-DTL-38999 Series III Type Connectors

233-305 Quadrax interface adapter with accessory threads



Receptacle front View



Receptacle rear View

Part Number Development									
Sample Part Number	**233-305**	**NF**	**00**	**-**	**17**	**5H**	**P**	**N**	**T**
Basic Number	**233-305**								
Finish	See Material and Finish table								
Connector Style	See Connector Style table								
Insert-to-Shell Grounding[2]	**–** = Inline shielded RJ45 insert **G** = Shielded and grounded to shell								
Shell Size	**17** or **19**								
RJ45 Category	**5H** = CAT 5e For Cat 6A applications consult factory								
Contact Style	**P** = Pin **S** = Socket								
Alternate Key Position[1]	**A**, **B**, **C**, **D**, **E**, **N** = Normal; Per MIL-DTL-38999								
Shrink Boot	**T** = Part No. 770-028 (Omit for None)								

Partial View Of Connector Quadrax Interface

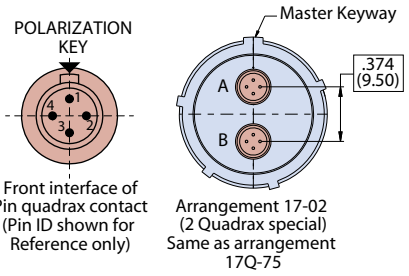

NOTES

1. See Section A for alternate key/keyway positions and panel cutout dimensions
2. G option is inline shielded and grounded to shell, available for receptacle only
3. Pin contact mates with P/N 854-002 Socket contact mates with P/N 854-001
4. Connector style 00 with slotted hole is front panel mount only
5. Meets IP67 in unmated condition, IP68 mated
6. Both plug and receptacle connectors have rear RJ45 jack

Wiring Diagram for Ethernet 10base-T & 100 Base-TX (Color Codes Per EIA/TIA 568B)

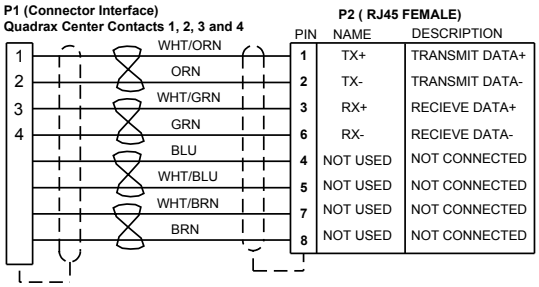

Wiring Diagram for Ethernet 1000base-T (Gigabit Ethernet) (Color Codes Per EIA/TIA 568B)

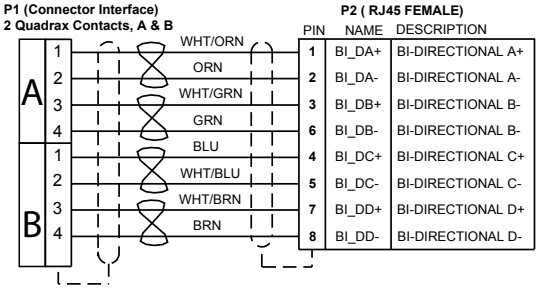

Material and Finish	
NF	Aluminum/Cadmium, Olive Drab
ME	Aluminum/Electroless Nickel
MT	Aluminum/Nickel PTFE
ZR	Aluminum/Black Zinc-Nickel

Connector Style	
05	Inline Receptacle
07	rear panel mount, jam nut receptacle
00	Wall mount receptacle with slotted holes
D0	Wall mount receptacle with round holes
CM	Wall mount receptacle with metric clinch nuts
G6	plug

Thread Dimensions			
Shell Size	A Thread	G Thread	N Thread
17	1.1875-.1P-.3L-TS-2A	M25 x 1.0-6g 0.100R	M32 x 1.0-6g 0.100R
19	1.2500-.1P-.3L-TS-2A	M28x 1.0-6g 0.100R	M35 x 1.0-6g 0.100R

Jam Nut Dimensions					
Shell Size	Ø K	L	M Flat	R	Ø S
17	1.764 (44.81) 1.740 (44.20)	1.642 (41.71) 1.610 (40.89)	1.191 (30.25) 1.181 (30.00)	.122 (3.10) .083 (2.11)	1.275 (32.39)
19	1.949 (49.50) 1.925 (48.90)	1.827 (46.41) 1.795 (45.59)	1.316 (33.43) 1.306 (33.17)	.153 (3.89) .114 (2.90)	1.337 (33.96)

Wall Mount Receptacle Dimensions						
Shell Size	B Sq	C BSC	D BSC	E	F	Ø H Holes
17	1.323 (33.60) 1.299 (32.99)	1.062 (26.97)	.969 (24.61)	.136 (3.45) .120 (3.05)	.202 (5.13) .186 (4.72)	.136 (3.45) .120 (3.05)
19	1.449 (36.80) 1.425 (36.20)	1.156 (29.36)	1.062 (26.97)			

© 2016 Glenair, Inc • 1211 Air Way, Glendale, CA 91201 • 818-247-6000 • www.glenair.com • U.S. CAGE code 06324 • SuperSeal™ Catalog
Dimensions in Inches (millimeters) are subject to change without notice.

G6 - PLUG WITH ACCESSORY THREADS

Plug Dimensions				
Shell Size	Ø A		Ø B	
	in	mm	in	mm
17	1.406	35.71	.928 .922	23.57 23.42
19	1.516	38.51	1.033 1.027	26.24 26.09

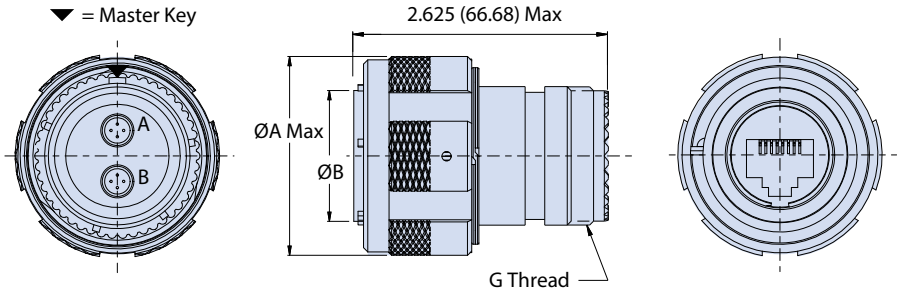

07 - REAR PANEL MOUNT, JAM NUT AND 05 - INLINE RECEPTACLE WITH ACCESSORY THREADS

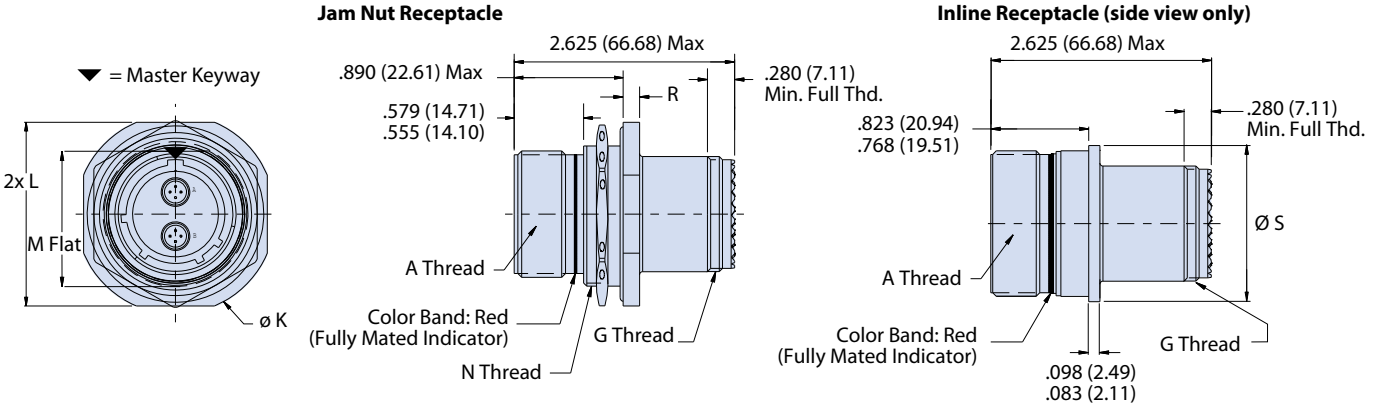

00, DO AND CM - WALL MOUNT RECEPTACLES WITH ACCESSORY THREADS

00 - Wall Mount Receptacle with Slotted Holes (Mating Face)

D0 - Wall Mount Receptacle With Round Holes (Mating Face)

CM - Wall Mount Receptacle With Metric Clinch Nuts (Mating Face)

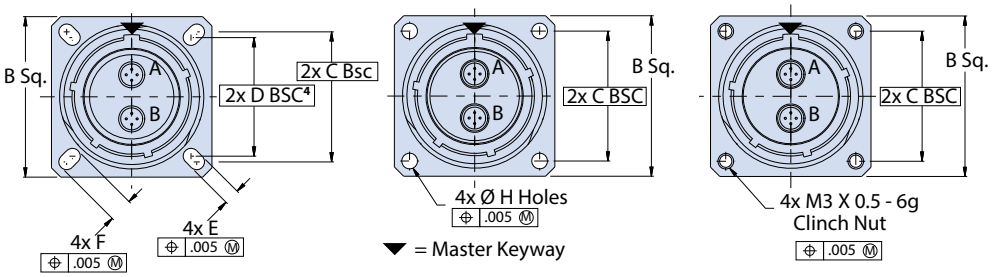

All external dimensions, features, etc. compliant with D38999/20, /24, &/26. Consult factory for additional information.

00 and D0 - Wall Mount Receptacle

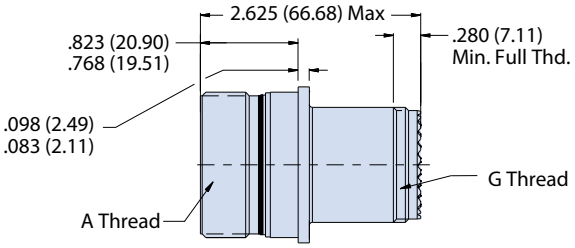

CM - Wall Mount Receptacle

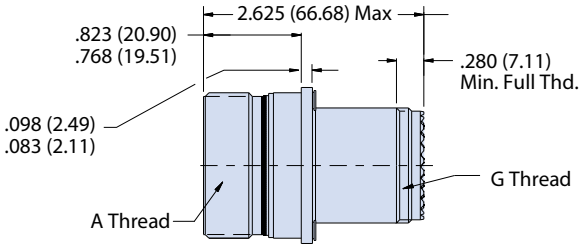

B

© 2016 Glenair, Inc • 1211 Air Way, Glendale, CA 91201 • 818-247-6000 • www.glenair.com • U.S. CAGE code 06324 • SuperSeal™ Catalog
Dimensions in Inches (millimeters) are subject to change without notice.

MIL-DTL-38999 Series III Type Connectors

233-330 Feed-through receptacle connector



Receptacle front View

Part Number Development							
Sample Part Number	**233-330**	**NF**	**00**	**-17**	**5H**	**N**	**1**
Basic Number	**233-330**						
Finish	See Material and Finish table						
Connector Style[1]	See Connector Style table						
Shell Size	**17** or **19**						
RJ45 Category	**5H** = CAT 5e **6A** = CAT 6A						
Alternate Key Position[1]	Per MIL-DTL-38999 **A**, **B**, **C**, **D**, **E**, **N** = Normal						
RJ45 Orientation	**1**, **2**, **3**, or **4**						

Material and Finish	
NF	Aluminum/Cadmium Olive Drab
ME	Aluminum/Electroless Nickel
MT	Aluminum/Nickel PTFE
ZR	Aluminum/Black Zinc-Nickel

Connector Style[1]	
00	Wall mount receptacle with slotted hole[2]
07	Jam nut, rear panel mount receptacle
D0	Wall mount receptacle with round holes
CM	Wall mount receptacle with metric clinch nuts

RJ45 Orientation Options (Receptacle Face)

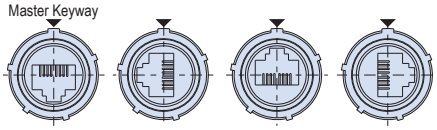

All external dimensions, features, etc. compliant with D38999/20, /24, &/26. Consult factory for additional information.

Jam Nut Dimensions								
Shell Size	**Ø K**		**L**		**M Flat**		**R**	
	in	**mm**	**in**	**mm**	**in**	**mm**	**in**	**mm**
17	1.764 1.740	44.81 44.20	1.642 1.610	41.71 40.89	1.191 1.181	30.25 30.00	.122 .083	3.10 2.11
19	1.949 1.925	49.50 48.90	1.827 1.795	46.41 45.59	1.316 1.306	33.43 33.17	.153 .114	3.89 2.90

Wall Mount Receptacle Dimensions												
Shell Size	**B Sq**		**C Bsc**		**D Bsc[2]**		**E**		**F**		**Ø H Holes**	
	In	**mm**	**In**	**mm**	**In**	**mm**	**In**	**mm**	**In**	**mm**	**In**	**mm**
17	1.323 1.299	33.60 32.99	1.062	26.97	.969	24.61	.136 .120	3.45 3.05	.202 .186	5.13 4.72	0.136 0.120	3.45 3.05
19	1.449 1.425	36.80 36.20	1.156	29.36	1.062	26.97						

NOTES

1. See Section A for alternate key/keyway positions and panel cutout dimensions
2. front panel mount only
3. Meets IP67 in unmated condition, IP68 mated
4. Feed-thru receptacle is jack-to-jack configuration

© 2016 Glenair, Inc • 1211 Air Way, Glendale, CA 91201 • 818-247-6000 • www.glenair.com • U.S. CAGE code 06324 • SuperSeal™ Catalog
Dimensions in Inches (millimeters) are subject to change without notice.

Rev. 01.14.22

07 - REAR PANEL MOUNT, JAM NUT FEED-THROUGH RECEPTACLE

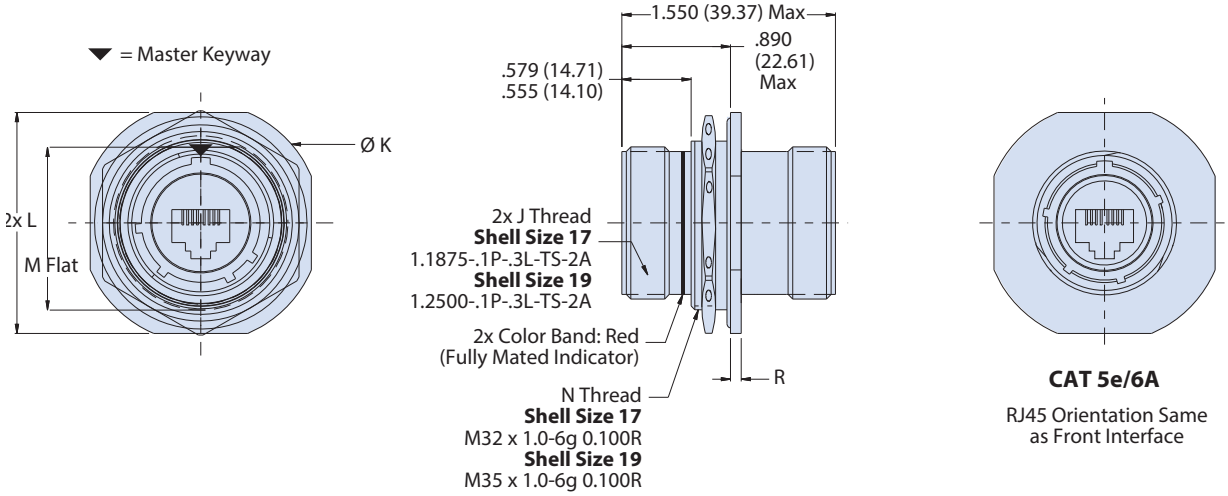

00, DO AND CM - WALL MOUNT FEED-THRU RECEPTACLES

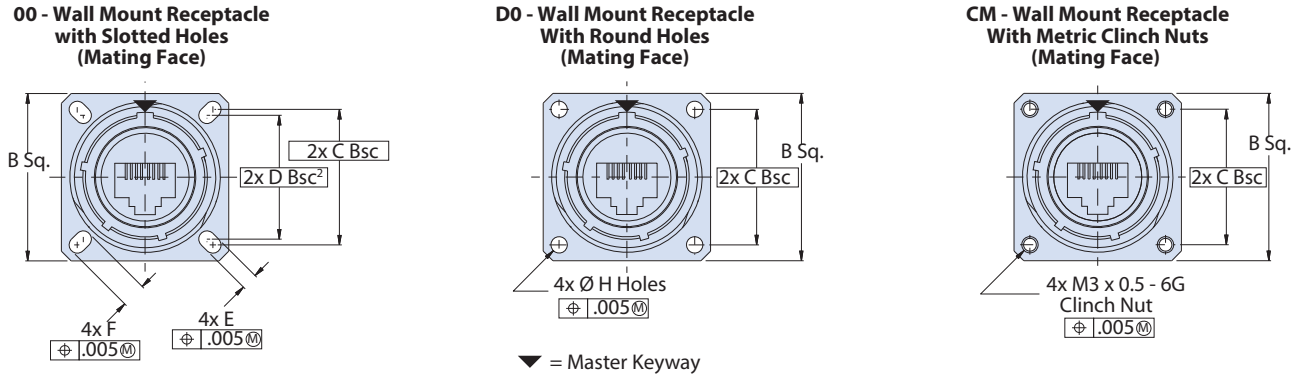

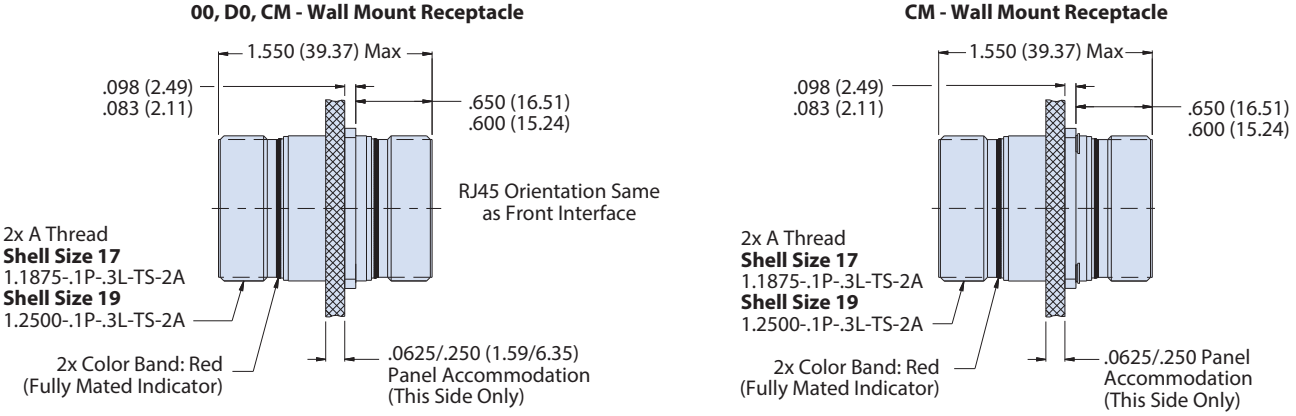

© 2016 Glenair, Inc • 1211 Air Way, Glendale, CA 91201 • 818-247-6000 • www.glenair.com • U.S. CAGE code 06324 • SuperSeal™ Catalog
Dimensions in Inches (millimeters) are subject to change without notice.

MIL-DTL-38999 Series III Type Connectors

CAT 5e cable assemblies



2330-0003 Glenair SuperNine RJ45 CAT 5e cable jumpers, SuperSeal to standard RJ45

SuperSeal RJ45 connectors are IP67 open face rated and IP68 in the mated condition for complete protection in harsh environments. SuperSeal connector styles include plug, wall mount and jam-nut receptacles. Wall mount receptacles are available with slotted holes, round holes and metric clinch nuts. All SuperSeal shells offer inline shielding and receptacle shells offer optional shell grounding. Any shell can be ordered with straight or right angle cable exit. RJ45 jack can be ordered in 1 of 4 available orientations to provide further security against mis-mating and accommodate existing RJ45 orientations. RJ45 connector end may be ordered as plug, jack or with flying leads in straight or right angle configurations. Maximum overall length is 100 feet. Consult factory for ordering information.

AVAILABLE INTERFACE OPTIONS



Plug

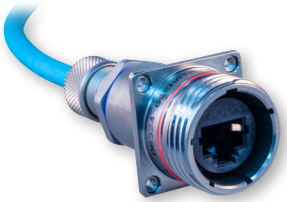

Wall mount receptacle with metric clinch nuts

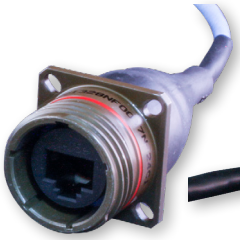

Wall Mount Receptacle with round holes

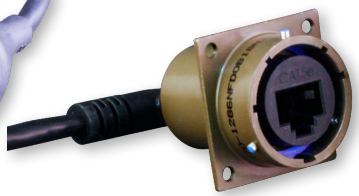

Wall Mount Receptacle with round holes



Jam-nut mount Receptacle





CAT 5E PLUG OPTIONS



CAT 5e, Straight



CAT 5e, 45°,

RJ45 ORIENTATION OPTIONS

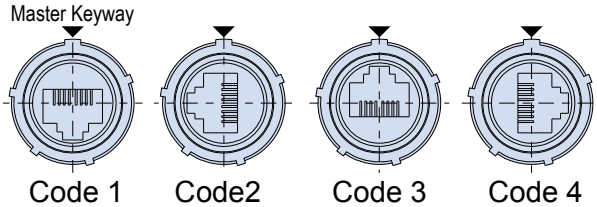

© 2016 Glenair, Inc • 1211 Air Way, Glendale, CA 91201 • 818-247-6000 • www.glenair.com • U.S. CAGE code 06324 • SuperSeal™ Catalog
Dimensions in Inches (millimeters) are subject to change without notice.



MIL-DTL-38999
TYPE HERMETIC
RJ45 ETHERNET
CONNECTOR

SUPERSEAL™

Glass-sealed Hermetic RJ45 Connectors

GLASS-SEALED
Hermetic
CONNECTORS

Helium Leak Testing

Series 23 SuperSeal hermetic connectors are 100% tested prior to shipment. A helium leak test is performed to certify the hermetic seal. This test is conducted by inducing 1ATM of vacuum on one side of the connector. Helium gas is released on the other side, and a mass spectrometer "counts" the number of helium molecules that penetrate the connector seal. Helium leak testing takes advantage of the small size of a helium molecule compared to air or water vapor. Helium is inert, rare in our atmosphere, and is easy to detect with a mass spectrometer. Series 806 hermetic connectors are designed specifically for commercial and military aircraft zones such as engine compartments. These areas are typically exposed to fuel, oil and changes in elevation. Such conditions present the need to protect sensitive electronic equipment from the effects of caustic chemicals and moisture ingress through standard environmental connectors where high pressure leads to sealing failure. Other aircraft locations such as the fuselage require hermetic connectors to maintain passenger cabin pressure while allowing for data transmission through separated compartments of the aircraft.

Prevents damage from moisture ingress and caustic chemicals

- **Cat 5e and 6A**
- **1 x 10^{-7} sccHe/sec @ 1 Atmophere Differential**
- **Superior performance**
- **D38999 Series III type**
- **SuperSeal™ signature sealing and grounding**

© 2016 Glenair, Inc • 1211 Air Way, Glendale, CA 91201 • 818-247-6000 • www.glenair.com • U.S. CAGE code 06324 • SuperSeal™ Catalog
Dimensions in Inches (millimeters) are subject to change without notice.

MIL-DTL-38999 Series III Type Connectors

233-309 Hermetic RJ45 Feed-thru Connector with Crimp Removable Contacts

RJ45/USB SUPER SEAL™

Glenair

B

Material and Finish	
Z1	Stainless Steel/Passivate
ZL	Stainless Steel/Electro-deposited Nickel

Connector Style[1]	
00	Wall mount receptacle with slotted hole[2]
07	Jam nut, rear panel mount receptacle
D0	Wall mount receptacle with round holes
CM	Wall mount receptacle with metric clinch nuts

NOTES

1. See Section A for alternate key/keyway positions and panel cutout dimensions
2. Front panel mount only
3. Meets IP67 in unmated condition, IP68 mated
4. Connector and contacts shall meet general requirements of MIL-DTL-38999, Series III. RJ45 connector meets TIA 568B standard.
5. RJ45 Jack Specifications:
- Shielded Cat5e RJ45 (grounded to PC board)
- Wiring: straight through
- RoHS compliant
- Electrical: current rating: 1.5 Amp
- D.W.V.: 1000 VDC (700 VAC)
- Operating temperature range: -40°C to +120°C
6. Hermeticity: <1 x 10^-7 sccHe/sec @ 1 atmosphere differential
7. Material/finishes:
- Shell, jam nut: 300 series cres / passivate or plate
- Insulator, hermetic: glass
- Insulators: high grade rigid dielectric
- Contacts: copper alloy/gold plate
- Seals: fluorosilicone
- RJ45 coupler housing: ULV94V-0 compliant ABS or PPS

Part Number Development								
Sample Part Number	**233-309**	**Z1**	**00**	**-**	**17**	**5H**	**N**	**1**
Basic Number	**233-309**							
Finish	See Material and Finish table							
Connector Style[1]	See Connector Style table							
Shielding	**–** = Inline shielded RJ45 **G** = Inline shielded and grounded to the shells							
Shell Size	**17** and **19**							
RJ45 Category	**5H** = CAT 5e							
Alternate Key Position[1]	Per MIL-DTL-38999 **A**, **B**, **C**, **D**, **E**, **N** = Normal							
RJ45 Orientation	**1**, **2**, **3**, or **4**							

Jam Nut Dimensions								
Shell Size	Ø K		L		M Flat		R	
	in	mm	in	mm	in	mm	in	mm
17	1.764 1.740	44.81 44.20	1.642 1.610	41.71 40.89	1.191 1.181	30.25 30.00	.122 .083	3.10 2.11
19	1.949 1.925	49.50 48.90	1.827 1.795	46.41 45.59	1.316 1.306	33.43 33.17	.153 .114	3.89 2.90

Wall Mount Receptacle Dimensions												
Shell Size	B Sq		C Bsc		D Bsc[2]		E		F		Ø H Holes	
	In	mm	In	mm	In	mm	In	mm	In	mm	In	mm
17	1.323 1.299	33.60 32.99	1.062	26.97	.969	24.61	.136 .120	3.45 3.05	.202 .186	5.13 4.72	0.136 0.120	3.45 3.05
19	1.449 1.425	36.80 36.20	1.156	29.36	1.062	26.97						

RJ45 Orientation Options (Receptacle Face)

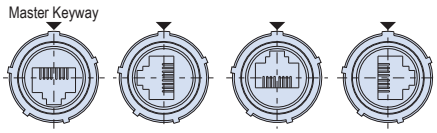

All external dimensions, features, etc. compliant with D38999/20, /24, &/26. Consult factory for additional information.

Jam Nut and Wall Mount Thread Dimensions			
Shell Size	A Thread	G Thread	N Thread (Jam-Nut Only)
17	1.1875-.1P-.3L-TS-2A	M25 x 1.0-6g 0.100R	M32 x 1.0-6g 0.100R
19	1.2500-.1P-.3L-TS-2A	M28x 1.0-6g 0.100R	M35 x 1.0-6g 0.100R

Jam Nut Dimensions					
Shell Size	Ø K	L	M Flat	R	Ø S
17	1.764 (44.81) 1.740 (44.20)	1.642 (41.71) 1.610 (40.89)	1.191 (30.25) 1.181 (30.00)	.122 (3.10) .083 (2.11)	1.275 (32.39)
19	1.949 (49.50) 1.925 (48.90)	1.827 (46.41) 1.795 (45.59)	1.316 (33.43) 1.306 (33.17)	.153 (3.89) .114 (2.90)	1.337 (33.96)

Wall Mount Receptacle Dimensions						
Shell Size	B Sq	C BSC	D BSC	E	F	Ø H Holes
17	1.323 (33.60) 1.299 (32.99)	1.062 (26.97)	.969 (24.61)	.136 (3.45) .120 (3.05)	.202 (5.13) .186 (4.72)	.136 (3.45) .120 (3.05)
19	1.449 (36.80) 1.425 (36.20)	1.156 (29.36)	1.062 (26.97)			

© 2016 Glenair, Inc • 1211 Air Way, Glendale, CA 91201 • 818-247-6000 • www.glenair.com • U.S. CAGE code 06324 • SuperSeal™ Catalog
Dimensions in Inches (millimeters) are subject to change without notice.

07 - REAR PANEL MOUNT, JAM NUT FEED-THROUGH CONNECTORS

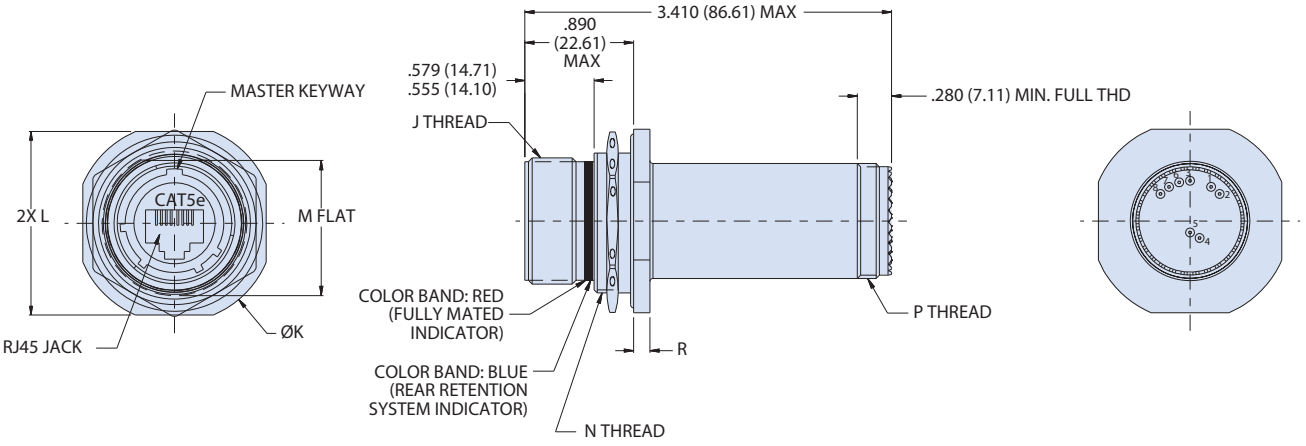

00, DO AND CM - WALL MOUNT FEED-THRU CONNECTORS

00 - Wall Mount Receptacle with Slotted Holes (Mating Face)

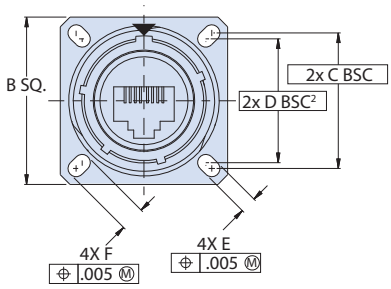

D0 - Wall Mount Receptacle With Round Holes (Mating Face)

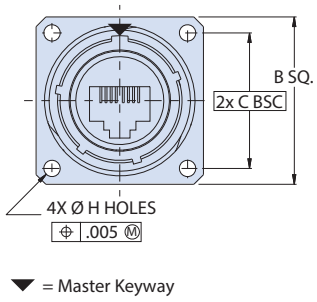

CM - Wall Mount Receptacle With Metric Clinch Nuts (Mating Face)

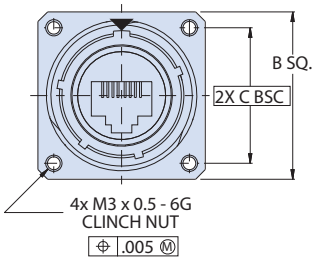

00, D0, CM - Wall Mount Receptacle

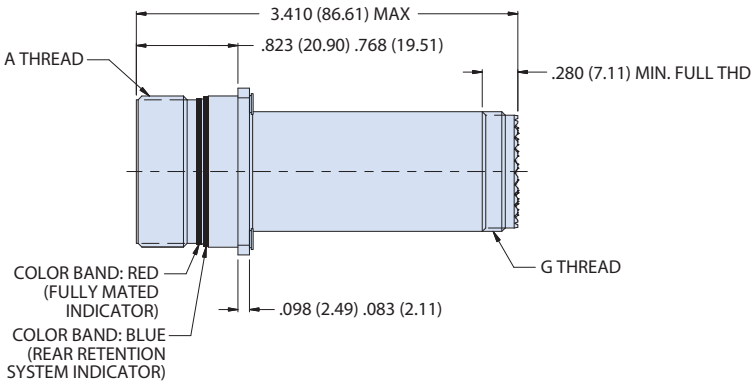

D0 - Wall Mount Receptacle
Shown for Contact Termination Positions Only

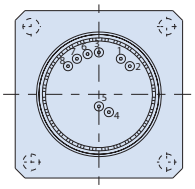

© 2016 Glenair, Inc • 1211 Air Way, Glendale, CA 91201 • 818-247-6000 • www.glenair.com • U.S. CAGE code 06324 • SuperSeal™ Catalog
Dimensions in Inches (millimeters) are subject to change without notice.



MIL-DTL-38999 TYPE
TVS FIELD-READY
RJ45 ETHERNET

RJ45/USB SUPER SEAL™

FILTER EMI/EMP CONNECTORS

SUPERSEAL™

Transient Voltage Suppression (TVS) RJ45 Connectors

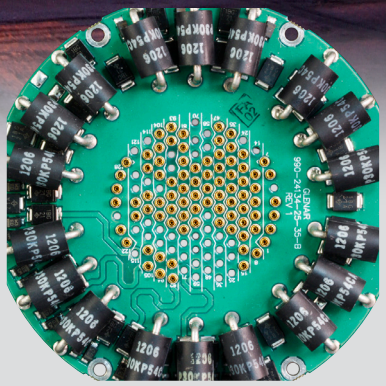

Transient Voltage Suppression (TVS) technologies are designed to shunt voltage transients directly to ground before such surges can damage sensitive electronic equipment. Individual TVS diodes as well as diode modules are incorporated directly into the TVS filter connector package to provide optimal protection for either individual contacts or groups of contacts without significant increases in connector size or weight. RTCA DO-160 and other electrical performance standards define acceptable benchmarks for withstanding electromagnetic pulse, lightning strike, or other induced voltage surges in high-reliability systems. For high-speed signals, care must be taken in selecting diodes to minimize capacitance loading effects which can lead to signal loss. Glenair SuperSeal™ TVS-equipped RJ45 connectors have been engineered to transmit high-speed signals while providing indirect lightning strike protection in accordance with the RTCA DO-160 standard.

Prevents Catastrophic EMP Failure in Military and Commercial Aircraft

- **Electromagnetic pulse (EMP) protection**
- **Lightning protection**
- **Saves weight and space**
- **Superior performance**
- **D38999 Series III type**
- **SuperSeal™ signature sealing and grounding**

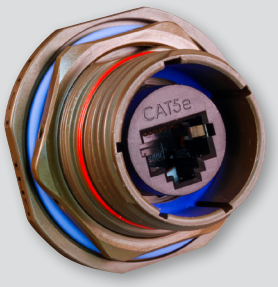



MIL-DTL-38999 type Series III SuperNine RJ45 receptacles with transient voltage suppression technoloy

© 2016 Glenair, Inc • 1211 Air Way, Glendale, CA 91201 • 818-247-6000 • www.glenair.com • U.S. CAGE code 06324 • SuperSeal™ Catalog
Dimensions in Inches (millimeters) are subject to change without notice.

RJ45 CAT 5e TVS connectors

TVS diode performance specifications and power selection

MIL-DTL-38999 Series III, TVS Diode, RJ45 CAT 5e and 6A Performance Specifications	
Material and Finish	
Shell/coupling Plating	Complete list of options available in the Material and Finish Options portion of this section
Contacts	PC tails or solder cup: copper alloy, gold plated
RJ45 coupler housing	UL94V-0 compliant ABS or PPS
Seals	Fluorosilicone
Shell Sizes	17 and 19
Environmental / Mechanical Performance	
Sealing	IP68 mated condition, IP67 unmated condition
Outgassing	Mod Code 186S* Mod Code 928**
Operating Temperature	-20°C to +85°C
Vibration	20g's, 3 Axis, 10 - 2000Hz
Mechanical Shock	300 g's
Backshell Interface	MIL-DTL-38999 Designator H
Mating Cycles	500

* Meets outgassing requirements per ASTM E 595 and meets NASA screening requirements for level 1 highest reliability
** Meets outgassing requirements per UL 94 V-0

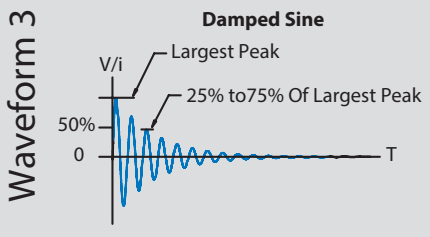

MIL-DTL-38999 Series III, TVS Diode, RJ45 CAT 5e and 6A Performance Specifications	
RJ45 Cat 6A & 5e Electrical Specifications	
Voltage Rating	1000 Volts, Cat 5e
Data Rate	10BASE-T, 100BASE-TX, 1000BASE-T/1000BASE-TX
Current Rating	1.5 Amps, Cat 5e
D.W.V.	1000 VDC (700 VAC)
Frequency	100 MHz, Cat 5e
Wiring	Straight through
Cabling Length	100 Meters Max
Shield Continuity	Continuous Through Coupler and Grounded to the Shell

FIGURE 1

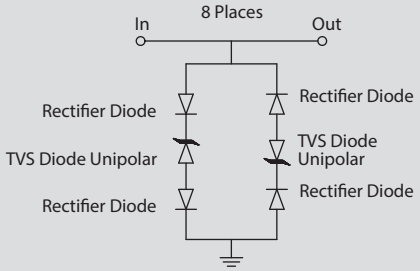

RTCA DO-160 Indirect Lightning Waveset A Waveforms		
RTCA DO-160 Waveform	**Level**	**Open Circuit Voltage/ Short Circuit Voltage V/A**
Waveform 3	1	100/4
	2	250/10
Waveform 4	1	50/10
	2	125/25

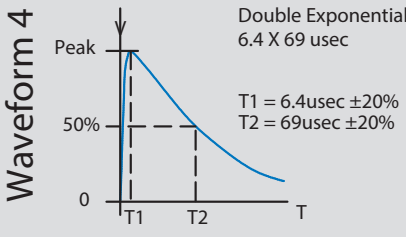

MIL-DTL-38999 Series III, TVS Diode, RJ45 CAT 5e and 6A Performance Specifications	
TVS Electrical Specifications Each signal line has TVS diode protection per the electrical schematic in figure 1.	
Peak pulse power (tp = 8/20us)	600w
Rated standoff voltage	2.8V
Minimum breakdown voltage	3.0V @ 1mA
Max clamping voltage (@ Ipp = 2A)	5.5V
Max clamping voltage (@ Ipp = 5A)	8.5V
Max clamping voltage (@ Ipp = 30A)	21.0V
Max leakage current	2.0uA max @ 2.8V
Typical junction capacitance	10pF @ 0v, 1Mhz
Polarity	bipolar
Compatible with IEC 61000-4-2 (ESD)	air - 15kv, contact - 8kv
Compatible with IEC 61000-4-4 (EFT)	40A - 5/50ns
Compatible with IEC 61000-4-5 (surge)	24A, 8/20us - level 2 (line-gnd) & level 3 (line-line)
Meets indirect lightning strike requirements per D0-160, section 222 pin injection waveform set A2.	

© 2016 Glenair, Inc • 1211 Air Way, Glendale, CA 91201 • 818-247-6000 • www.glenair.com • U.S. CAGE code 06324 • SuperSeal™ Catalog
Dimensions in Inches (millimeters) are subject to change without notice.

RJ45 CAT 5e TVS connectors

244-001 Jam-nut receptacle, PC tail or solder cup
MIL-DTL-38999 Series III Type Connectors

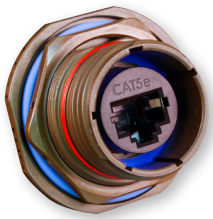

Receptacle Front View



Receptacle Rear View

Material and Finish	
NF	Aluminum/Cadmium Olive Drab
ME	Aluminum/Electroless Nickel
MT	Aluminum/Nickel PTFE
ZR	Aluminum/Black Zinc-Nickel

Part Number Development							
Sample Part Number	**244-001**	**NF**	**19**	**P**	**G**	**N**	**1**
Basic Number	**244-001** with stand-offs						
Finish	See Material and Finish Table						
Shell Size	**17** or **19**						
Termination	**P** = PC tail **S** = Solder cup						
Insert-to-Shell Grounding	**G** = Shielded and grounded to shell						
Alternate Key Position[1]	Per MIL-DTL-38999 **A**, **B**, **C**, **D**, **E**, **N** = Normal[2]						
RJ45 Orientation	**1**, **2**, **3**, or **4**						

NOTES

1. See Section A for alternate key/keyway positions and panel cutout dimensions
2. See page B-24 for diode values

All external dimensions, features, etc. compliant with D38999/20, /24, &/26. Consult factory for additional information.

RJ45 ORIENTATION CODE AND PCB LAYOUT (PCB LAYOUT FOR PC TAIL VERSION)

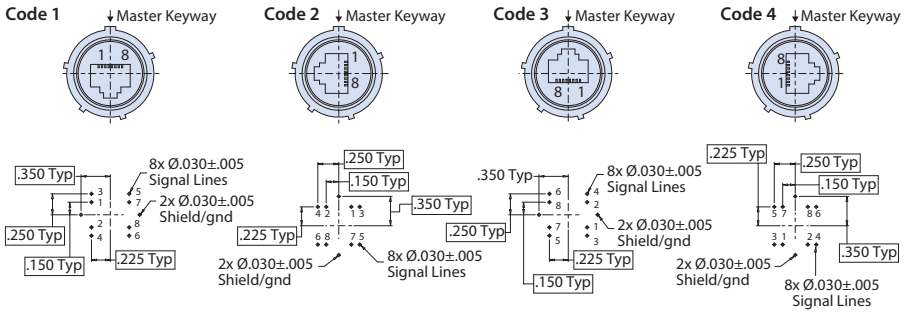

Component Mounting Side

Jam Nut Dimensions												
Shell Size	A Thread	B Thread	C		D Sq.		Ø E		Ø F		G Flat	
			in	mm	in	mm	in	mm	in	mm	in	mm
17	1.1875-.1P-.3L-TS-2A	M32 x 1.0-6g 0.100R	.122 .083	3.10 2.11	1.642 1.610	41.71 40.89	1.764 1.740	44.81 44.20	1.270 1.260	32.56 32.00	1.210 1.200	30.73 30.48
19	1.2500-.1P-.3L-TS-2A	M35 x 1.0-6g 0.100R	.154 .114	3.91 2.90	1.827 1.795	46.41 45.59	1.949 1.925	49.50 48.90	1.395 1.385	35.43 35.18	1.335 1.325	33.91 33.66

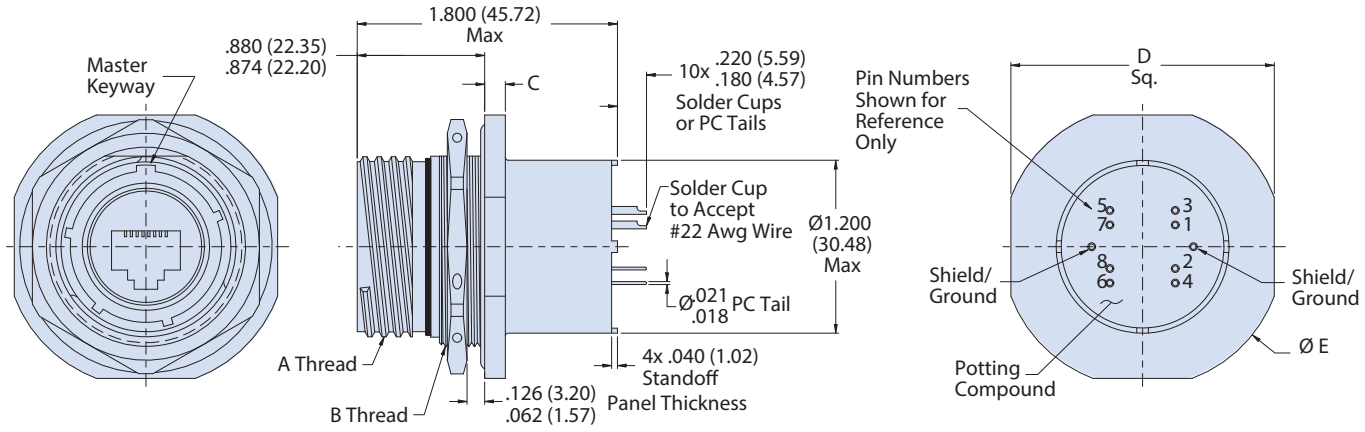

© 2016 Glenair, Inc • 1211 Air Way, Glendale, CA 91201 • 818-247-6000 • www.glenair.com • U.S. CAGE code 06324 • SuperSeal™ Catalog
Dimensions in Inches (millimeters) are subject to change without notice.

RJ45 CAT 5e TVS connectors

244-002 Wall mount receptacle, PC tail or solder cup
MIL-DTL-38999 Series III Type Connectors

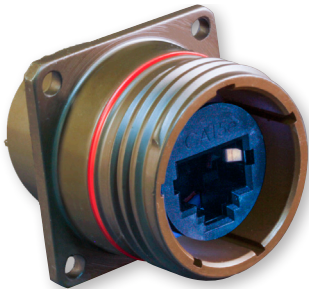

Material and Finish[1]	
NF	Aluminum/Cadmium Olive Drab
ME	Aluminum/Electroless Nickel
MT	Aluminum/Nickel PTFE
ZR	Aluminum/Black Zinc-Nickel

Part Number Development							
Sample Part Number	**244-002**	**NF**	**19**	**P**	**G**	**N**	**1**
Basic Number	**244-002** with stand-offs						
Finish	See Material and Finish Table						
Shell Size	**17** or **19**						
Termination	**P** = PC tail **S** = Solder cup						
Insert-to-Shell Grounding	**G** = Shielded and grounded to shell						
Alternate Key Position[1]	Per MIL-DTL-38999 **A**, **B**, **C**, **D**, **E**, **N** = Normal						
RJ45 Orientation	**1**, **2**, **3**, or **4**						

NOTES

1. See Section A for alternate key/keyway positions and panel cutout dimensions
2. See page B-24 for diode values

All external dimensions, features, etc. compliant with D38999/20, /24, &/26. Consult factory for additional information.

RJ45 ORIENTATION CODE AND PCB LAYOUT (PCB LAYOUT FOR PC TAIL VERSION)

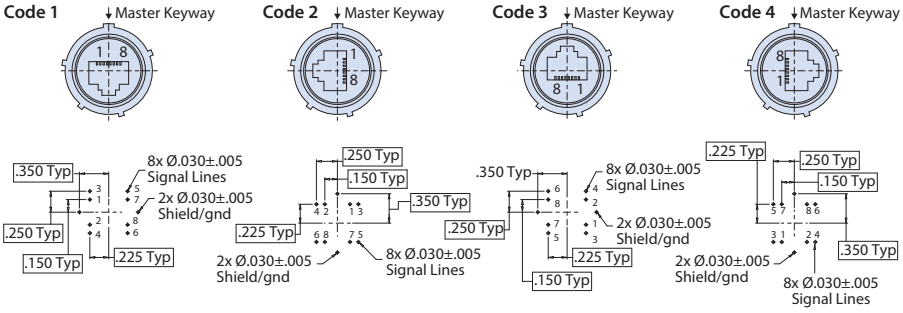

Component Mounting Side

Jam Nut Dimensions									
		B Sq.		C Bsc		Ø D Min.		E Bsc	
Shell Size	**A Thread**	**in**	**mm**	**in**	**mm**	**in**	**mm**	**in**	**mm**
17	1.1875-.1P-.3L-TS-2A	1.323 1.299	33.60 32.99	1.062	26.97	1.219	30.96	1.062	26.97
19	1.2500-.1P-.3L-TS-2A	1.449 1.425	36.80 36.195	1.156	29.36	1.297	32.94	1.156	29.36

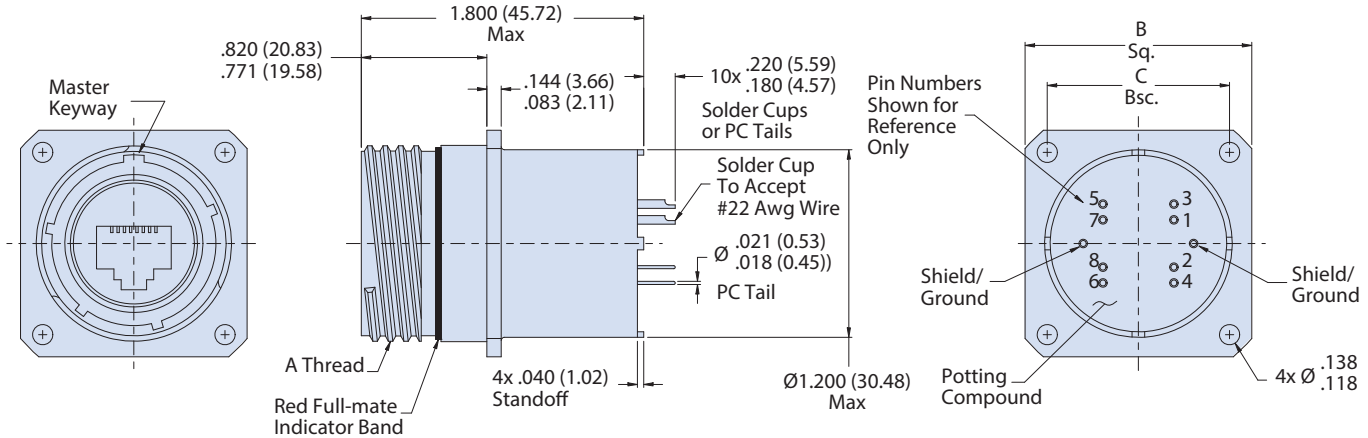

© 2016 Glenair, Inc • 1211 Air Way, Glendale, CA 91201 • 818-247-6000 • www.glenair.com • U.S. CAGE code 06324 • SuperSeal™ Catalog
Dimensions in Inches (millimeters) are subject to change without notice.

RJ45 CAT 5e TVS connectors

244-003 Wall mount receptacle, PC tail or solder cup
MIL-DTL-38999 Series III Type Connectors

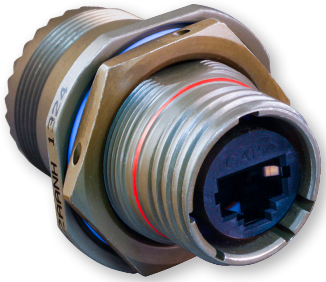

Material and Finish	
NF	Aluminum/Cadmium Olive Drab
ME	Aluminum/Electroless Nickel
MT	Aluminum/Nickel PTFE
ZR	Aluminum/Black Zinc-Nickel

Part Number Development							
Sample Part Number	**244-003**	**NF**	**19**	**P**	**G**	**N**	**1**
Basic Number	**244-003** with accessory thread						
Finish	See Material and Finish Table						
Shell Size	**17** or **19**						
Termination	**P** = PC tail **S** = Solder cup						
Insert-to-Shell Grounding	**G** = Shielded and grounded to shell						
Alternate Key Position[1]	Per MIL-DTL-38999 **A**, **B**, **C**, **D**, **E**, **N** = Normal						
RJ45 Orientation	**1**, **2**, **3**, or **4**						

B

NOTES

1. See Section A for alternate key/keyway positions and panel cutout dimensions
2. See page B-24 for diode values

All external dimensions, features, etc. compliant with D38999/20, /24, &/26. Consult factory for additional information.

RJ45 ORIENTATION CODE AND PCB LAYOUT (PCB LAYOUT FOR PC TAIL VERSION)

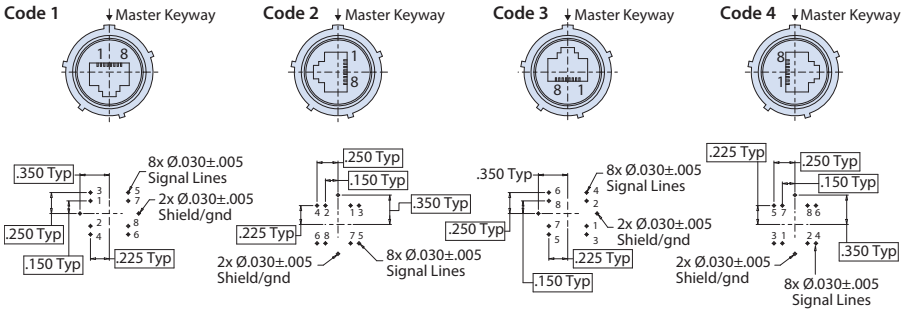

Component Mounting Side

Jam Nut Dimensions												
Shell Size	A Thread	B Thread	C		D Sq.		Ø E		Ø F		G Flat	
			in	mm	in	mm	in	mm				
17	1.1875-.1P-.3L-TS-2A	M32 x 1.0-6g 0.100R	.122 .083	3.10 2.11	1.642 1.610	41.71 40.89	1.764 1.740	44.81 44.17	1.270 1.260	32.26 32.00	1.210 1.200	30.73 30.48
19	1.2500-.1P-.3L-TS-2A	M35 x 1.0-6g 0.100R	.154 .114	3.91 2.90	1.827 1.795	46.41 45.59	1.949 1.925	49.50 48.90	1.395 1.385	35.43 35.18	1.35 1.325	33.91 33.66

JAM-NUT RECEPTACLE WITH ACCESSORY THREADS

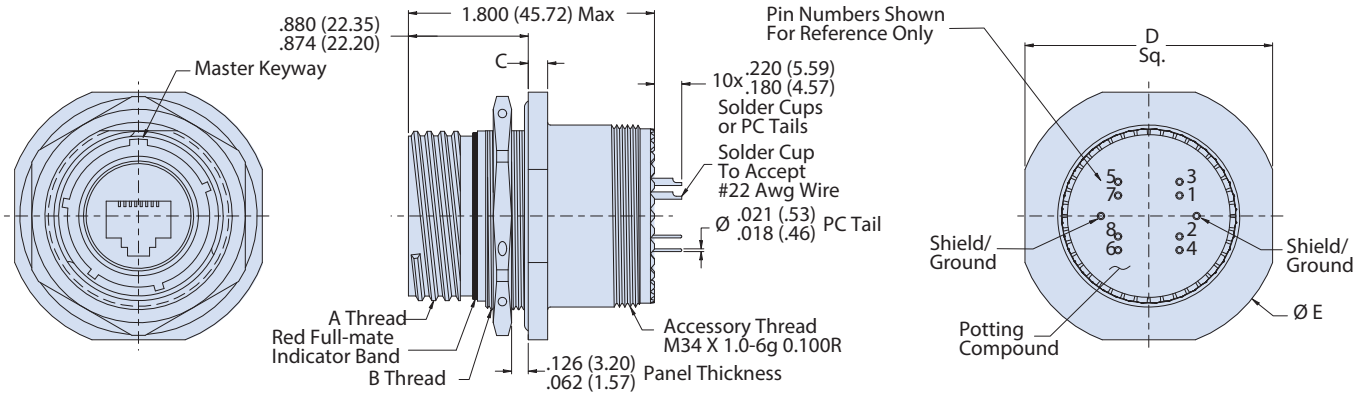

© 2016 Glenair, Inc • 1211 Air Way, Glendale, CA 91201 • 818-247-6000 • www.glenair.com • U.S. CAGE code 06324 • SuperSeal™ Catalog
Dimensions in Inches (millimeters) are subject to change without notice.

RJ45 CAT 5e TVS connectors

244-004 Wall mount receptacle, PC tail or solder cup
MIL-DTL-38999 Series III Type Connectors



Material and Finish	
NF	Aluminum/Cadmium Olive Drab
ME	Aluminum/Electroless Nickel
MT	Aluminum/Nickel PTFE
ZR	Aluminum/Black Zinc-Nickel

Part Number Development							
Sample Part Number	**244-004**	**NF**	**19**	**P**	**G**	**N**	**1**
Basic Number	**244-004** with accessory thread						
Finish	See Material and Finish Table						
Shell Size	**17** or **19**						
Termination	**P** = PC tail **S** = Solder cup						
Insert-to-Shell Grounding	**G** = Shielded and grounded to shell						
Alternate Key Position	Per MIL-DTL-38999 **A**, **B**, **C**, **D**, **E**, **N** = Normal						
RJ45 Orientation	**1**, **2**, **3**, or **4**						

NOTES

1. See Section A for alternate key/keyway positions and panel cutout dimensions
2. See page B-24 for diode values

All external dimensions, features, etc. compliant with D38999/20, /24, &/26. Consult factory for additional information.

RJ45 ORIENTATION CODE AND PCB LAYOUT (PCB LAYOUT FOR PC TAIL VERSION)

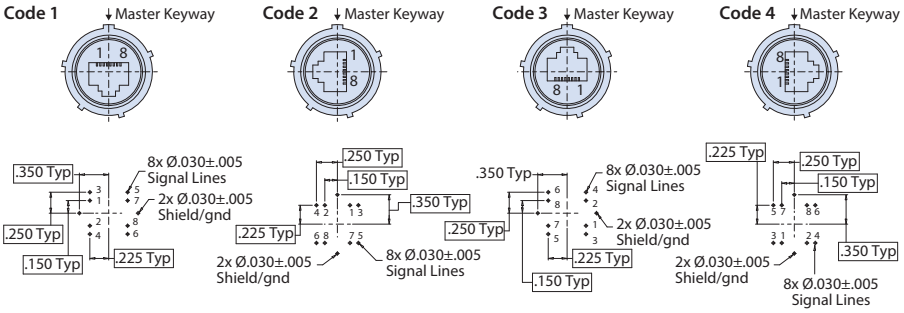

Component Mounting Side

Jam Nut Dimensions									
		B Sq.		C Bsc		Ø D Min		E Bsc	
Shell Size	A Thread	in	mm	in	mm	in	mm	in	mm
17	1.1875-.1P-.3L-TS-2A	1.323 1.299	33.60 32.99	1.062	26.97	1.219	30.96	1.062	26.97
19	1.2500-.1P-.3L-TS-2A	1.449 1.425	36.80 36.195	1.156	29.36	1.297	32.94	1.156	29.36

REAR PANEL MOUNT RECEPTACLE WITH ACCESSORY THREADS

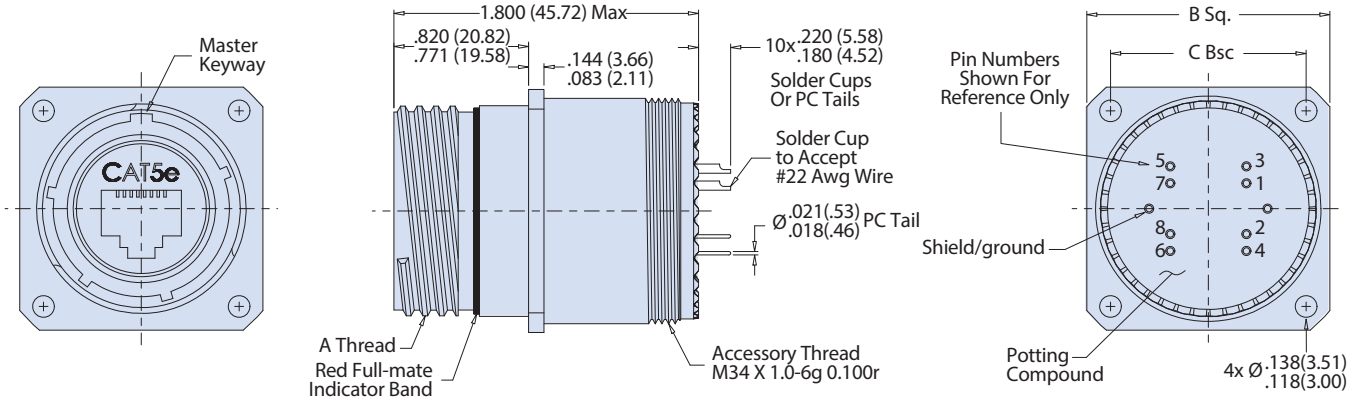

© 2016 Glenair, Inc • 1211 Air Way, Glendale, CA 91201 • 818-247-6000 • www.glenair.com • U.S. CAGE code 06324 • SuperSeal™ Catalog
Dimensions in Inches (millimeters) are subject to change without notice.

MIL-DTL-38999 TYPE
FIELD-READY
USB 2.0

SUPERSEAL™



Rugged environmental MIL-DTL-38999 type connectors with IP67 open-face sealing, robust insert-to-shell grounding, and a complete range of wire, cable, and circuit board terminations



SuperSeal™ USB 2.0 Advantages

- **Superior sealing—IP67 open face and IP68 mated—for complete system protection against water, sand and dust**
- **Highly durable USB 2.0 design, including enhanced operating temperature, increased life-cycle, and rugged vibration and shock performance**
- **Shielded/grounded receptacle connectors**
- **Crimp, solder-cup, PC tail, contact/wire termination options**
- **Scoop-proof, self-locking, triple-start threaded coupling (MIL-DTL-38999 Series III type)**

Glenair, Inc.
1211 Air Way
Glendale, CA 91201-2497
818-247-6000
sales@glenair.com
www.glenair.com



C

SERIES 23

SuperSeal™

USB 2.0 and 3.0 and 3.2 Ruggedized solutions

38999 Type SuperSeal ruggedized connectors offer outstanding metal-to-metal grounding sealing performance for commercial, USB 2.0 and high-speed USB 3.0 interfaces in a standard 38999 type package. Both versions are IP68 rated when mated and IP67 rated in the unmated condition for complete system protection against water sand and dust. Glenair USB 2.0 and 3.0 solutions are perfectly suited for field communications where connecting external peripherals such as storage devices, printers, and standard mouse and keyboard input devices. Beyond the addition of standard USB type peripherals these protocols also offer a means to connect other protocol based hardware through the use of supported adapters, including Ethernet RJ45 and HDMI (USB 3.0 preferred). 38999 Type SuperSeal USB connectors feature polarized keys to prevent mismating and non-corrosive, conductive material and finish options. Highly durable SuperSeal™ insert design, provides enhanced operating temperature, increased life-cycle, and rugged vibration and shock performance. Simple plug-and-play connectivity and *hot-swappable* addition of external peripherals without restarting systems. Crimp, solder-cup, PC tail and cable assemblies available

USB 2.0 AND 3.0 CONNECTOR



USB 2.0 connectors begin on page C-3

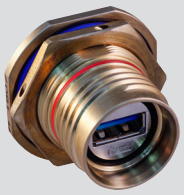

USB 3.0 connectors begin on page C-21



USB 3.2 connectors begin on page C-40

© 2016 Glenair, Inc • 1211 Air Way, Glendale, CA 91201 • 818-247-6000 • www.glenair.com • U.S. CAGE code 06324 • SuperSeal™ Catalog
Dimensions in Inches (millimeters) are subject to change without notice.

RJ45/USB SUPER SEAL™

USB 2.0 TYPE A CONNECTORS

MIL-DTL-38999 Series III Type Connectors

Product Selection Guide

Glenair®



233-340 C-4

SuperSeal™ Coupler with Accessory Threads and USB 2.0/3.0 Male-to-Female (Plug) or Female-to-Female Receptacle



233-341 C-6

SuperSeal Receptacle with crimp removable contacts. USB 2.0 Female Interface to PC Tail Termination



233-342 C-8

SuperSeal Receptacle with USB 2.0 Female Interface to PC Tail Termination



233-343 C-10

SuperSeal Receptacle with USB 2.0 Female Interface to Solder Cup Termination

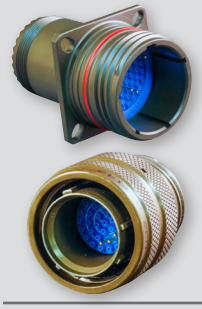

233-344 C-12

SuperSeal Receptacle Adapter with Accessory Threads and Pin or Socket Contacts to USB 2.0 Female Interface



233-345 C-14

SuperSeal Connectors with Accessory Threads and USB 2.0 Male (Plug) or Female (Receptacle) Interface to Crimp Removable Contacts



233-370 C-16

SuperSeal Feed-thru Receptacle with USB 2.0 Female-to-Female Interface



233-390 C-18

SuperSeal USB 2.0 Memory Stick



233-92 C-19

SuperSeal USB 3.0 Memory Stick



Cable Assemblies E-20

SuperSeal USB 3.0 Cable Assemblies

C

© 2016 Glenair, Inc • 1211 Air Way, Glendale, CA 91201 • 818-247-6000 • www.glenair.com • U.S. CAGE code 06324 • SuperSeal™ Catalog
Dimensions in Inches (millimeters) are subject to change without notice.

Performance Specifications

C

USB 2.0 Performance Specifications	
Property	**Description**
Material and Finish	
Shell/Coupling and Plating	Aluminum, cad/o.d., electroless nickel, nickel PTFE, black zinc nickel
Contacts	PC tails, solder cup, and crimp contacts: copper alloy, gold plated
USB Insulator	LCP
Grommet, Peripheral Seal, Interfacial Seal, O-ring	Blended fluorosilicone/silicone elastomer, 30% silicone per ZZ-R-765, 70% fluorosilicone per MIL-R-25988
Shell Sizes	15 Consult factory for other shell size options
Electrical Specifications	
Data Rate	480 Mbps
Power Usage	500 milliamps (mA)
Current Rating	1.5 Amps,
D.W.V.	500 VAC
I.R.	1000 MegOhms
Cabling Length	5.0 Meters Max
Shielding	Continuous through coupler or continuous coupler to shell
Environmental/Mechanical Performance	
Sealing	IP68 mated condition, IP67 unmated condition
Outgassing	**Mod Code 186S** meets outgassing requirements per ASTM E 595 and meets NASA level 3 screening for standard reliability **Mod Code 928** meets outgassing requirements per UL 94 V-0
Operating Temperature	-40°C to +120°C
Vibration	20g's, 3 Axis, 10 - 2000Hz
Mechanical Shock	300 g's
Backshell Interface	MIL-DTL-38999 Designator H
Mating System	Triple-start stub ACME
Mating Cycles	500

USB 3.0 Performance Specifications	
Property	**Description**
Material and Finish	
Shell/Coupling and Plating	Aluminum, cad/o.d., electroless nickel, nickel PTFE, black zinc nickel
Contacts	PC tails, solder cup, and crimp contacts: copper alloy, gold plated
USB Insulator	LCP
Grommet, Peripheral Seal, Interfacial Seal, O-ring	Blended fluorosilicone/silicone elastomer, 30% silicone per ZZ-R-765, 70% fluorosilicone per MIL-R-25988
Shell Sizes	15 Consult factory for other shell size options
Electrical Specifications	
Data Rate	5.0 Gbps
Power Usage	500 milliamps (mA)
Current Rating	1.5 Amps,
D.W.V.	500 VAC
I.R.	1000 MegOhms
Cabling Length	3.0 Meters Max
Shielding	Continuous through coupler or continuous coupler to shell
Environmental/Mechanical Performance	
Sealing	IP68 mated condition, IP67 unmated condition
Outgassing	**Mod Code 186S** meets outgassing requirements per ASTM E 595 and meets NASA level 3 screening for standard reliability **Mod Code 928** meets outgassing requirements per UL 94 V-0
Operating Temperature	-40°C to +85°C
Vibration	20g's, 3 Axis, 10 - 2000Hz
Mechanical Shock	300 g's
Backshell Interface	MIL-DTL-38999 Designator H
Mating System	Triple-start stub ACME
Mating Cycles	500

© 2016 Glenair, Inc • 1211 Air Way, Glendale, CA 91201 • 818-247-6000 • www.glenair.com • U.S. CAGE code 06324 • SuperSeal™ Catalog
Dimensions in Inches (millimeters) are subject to change without notice.

USB 2.0 TYPE A CONNECTORS

MIL-DTL-38999 Series III Type Connectors

233-340 Couplers with accessory threads



Plug
Front View



Square Flange
Receptacle
Front View



Jam Nut Receptacle
Front View

Part Number Development										
Sample Part Number	**233-340**	**NF**	**00**	**-15**	**2**	**A**	**A**	**N**	**H**	**T**
Basic Number	**233-340**									
Finish	See Material and Finish table									
Connector Style[1]	See Connector Style table									
Shell Size	**15**									
USB Performance	**2** = USB 2.0									
USB Front Interface	**A** = Type A									
USB Back Interface	**A** = Type A									
Alternate Key Position[1]	**A, B, C, D, E, N** = Normal per MIL-DTL-38999									
USB Orientation	**H** = Horizontal **V** = Vertical									
Shrink Boot	**T** = Part No. 770-028 (Omit for None)									

USB Receptacle Orientation Options

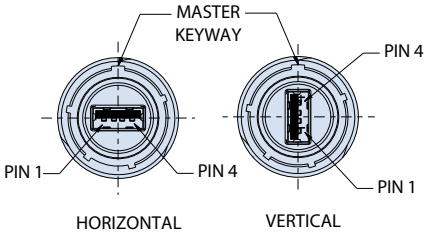

USB Plug Orientation Options

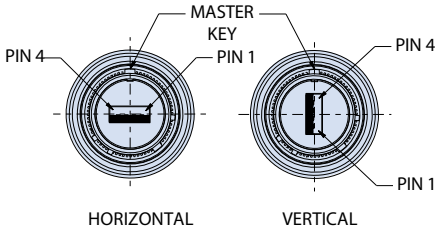

Material and Finish	
NF	Aluminum/Cadmium, Olive Drab
M	Aluminum/Electroless Nickel
MT	Alumimun/Nickel PTFE
ZR	Aluminum/Black Zinc-Nickel

All external dimensions, features, etc. compliant with D38999/20, /24, &/26. Consult factory for additional information.

Connector Style	
G6	Plug
07	Rear panel mount, jam nut receptacle
00	Wall mount receptacle with slotted holes
D0	Wall mount receptacle with round holes
CM	Wall mount receptacle with metric clinch nuts

USB 2.0 Wiring				
Pin	**Name**	**Cable Color (USB)**	**Description**	**Recommended Wire Sizes (AWG)**
1	(V Bus)	Red	+5 V	22
2	(D-)	White	Data -	28
3	(D+)	Green	Data +	28
4	(GND)	Black	Ground	22

G6 - PLUG WITH ACCESSORY THREADS

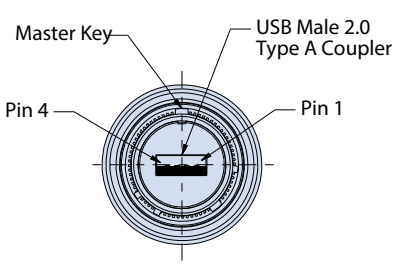

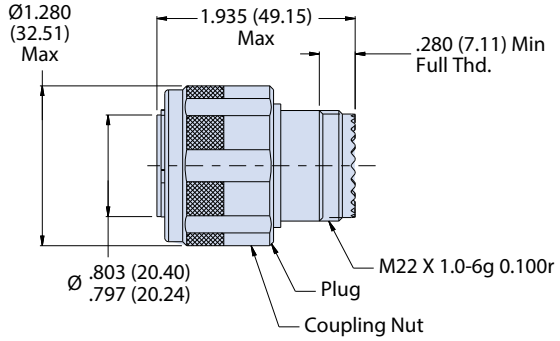

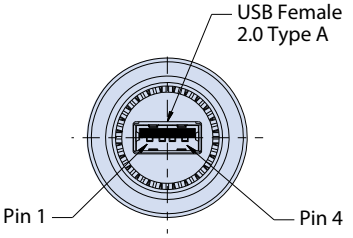

© 2016 Glenair, Inc • 1211 Air Way, Glendale, CA 91201 • 818-247-6000 • www.glenair.com • U.S. CAGE code 06324 • SuperSeal™ Catalog
Dimensions in Inches (millimeters) are subject to change without notice.

07 - REAR PANEL MOUNT, JAM NUT RECEPTACLE WITH ACCESSORY THREADS

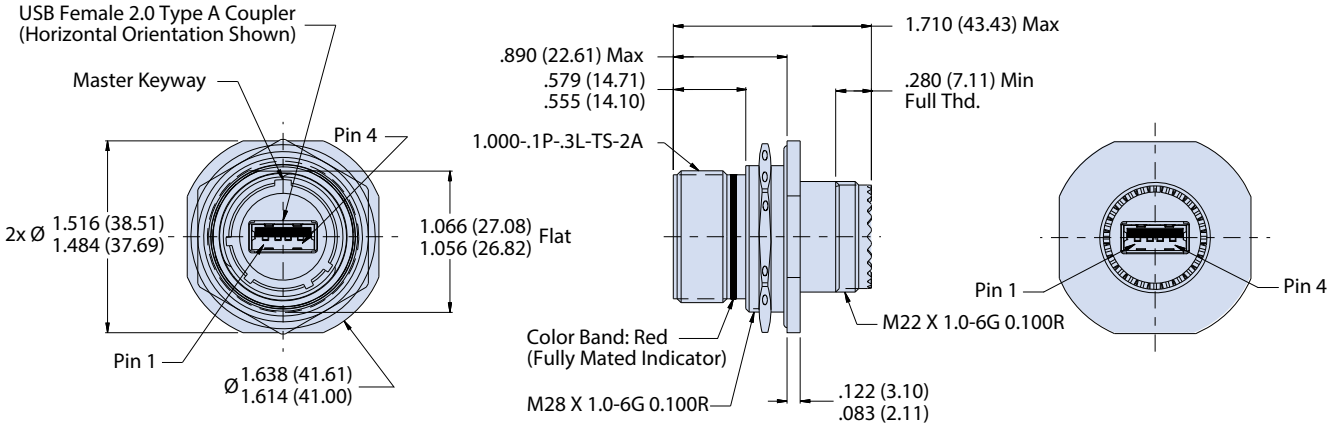

00, DO AND CM - WALL MOUNT RECEPTACLES WITH ACCESSORY THREADS

00 - Slotted Hole Receptacle Face View

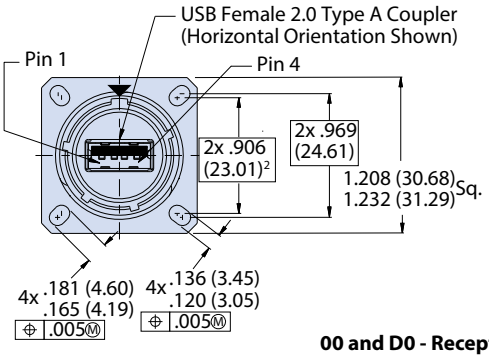

D0 - Round Hole Receptacle Face View

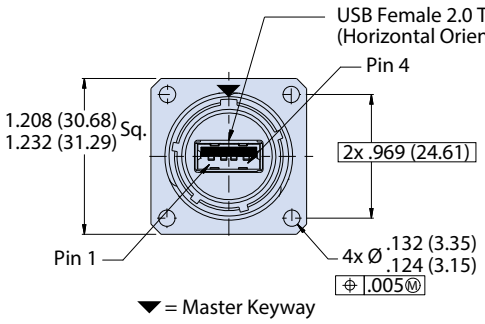

CM - Clinch Hole Receptacle Face View

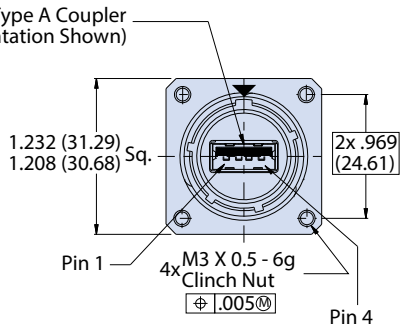

00 and D0 - Receptacle Side View

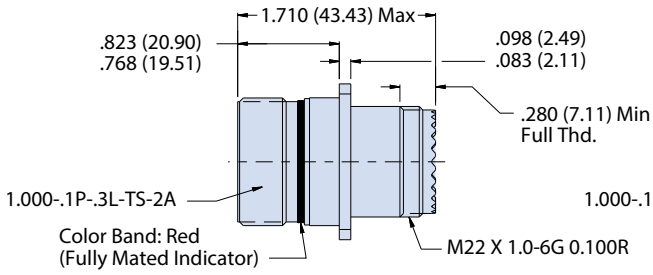

CM - Receptacle Side View

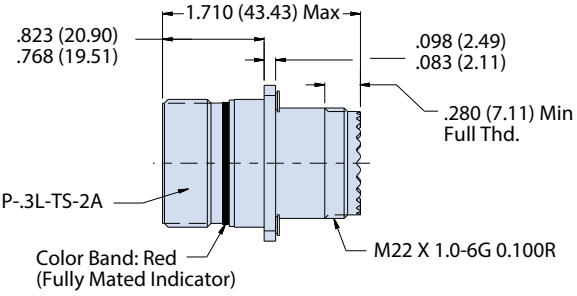

NOTES

1. See Section A for alternate key/keyway positions and panel cutout dimensions
2. Meets IP67 in unmated condition, IP68 mated
3. Receptacle has USB female receptacle, plug has USB male plus
4. Material and Finish
   - Shell, jam nut: al alloy
   - Insulators: high grade rigid dielectric/ n.a.
   - Contacts: copper alloy, gold plated
   - Seals: silicone based elastomer
   - USB (shell/contacts): copper alloy
   - Dielectric: hi-temp thermoplastic PA9T UL94V-0
   - Hardware: stainless steel /passivated

USB 2.0
MIL-DTL-38999 Series III Type Connectors

233-341 USB 2.0 Type A receptacle to size 22D crimp removable contacts

Plug
Front View



Jam Nut
Receptacle
Front View



Square Flange
Receptacle
Rear View



How to Order									
Sample Part Number	**233-341**	**NF**	**00**	**-15**	**2**	**A**	**N**	**H**	**T**

Basic Number	**233-341**
Finish[1]	See Material and Finishes table[1]
Connector Style[1]	See connector style table
Shell Size	**15**
RJ45 Category	**2** = USB 2.0
USB Interface Type	**A** = Type A
Alternate Key Position[1]	**A**, **B**, **C**, **D**, **E**, **N** = Normal; per MIL-DTL-38999
USB Orientation	**H** = Horizontal **V** = Vertical
Shrink Boot	**T** = Shrink Boot (Omit for None)

233-341 Superceded by 233-345

Materials and Finishes[1]	
NF	Cadmium olive drab
M	Electroless nickel
MT	Nickel PTFE

Connector Style[1]	
00	Square flange receptacle with slotted holes
07	Jam nut receptacle
D0	Wall mount receptacle with slotted holes
CM	Wall mount receptacle with metric clinch nuts
G6	Plug

USB Orientation Options
(Partial Views Shown)

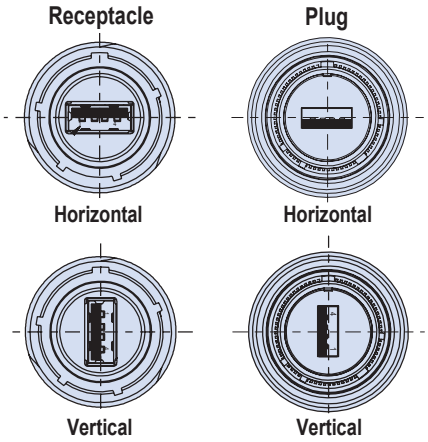

NOTES

1. See Section A for alternate key positions, panel cutout dimensions and complete material and finish options
2. Front panel mount only
3. All external dimensions, features, etc. Compliant with D38999/20, /24 & /26. Consult factory for additional information

USB 2.0 Wiring				
Pin	Name	Cable Color (USB)	Description	Recommended Wire Sizes (AWG)
1	(V Bus)	Red	+5 V	22
2	(D-)	White	Data -	28
3	(D+)	Green	Data +	28
4	(GND)	Black	Ground	22

All external dimensons, features, etc. compliant with D38999/20, /24, &/26. Consult factory for additional information.

G6 PLUG

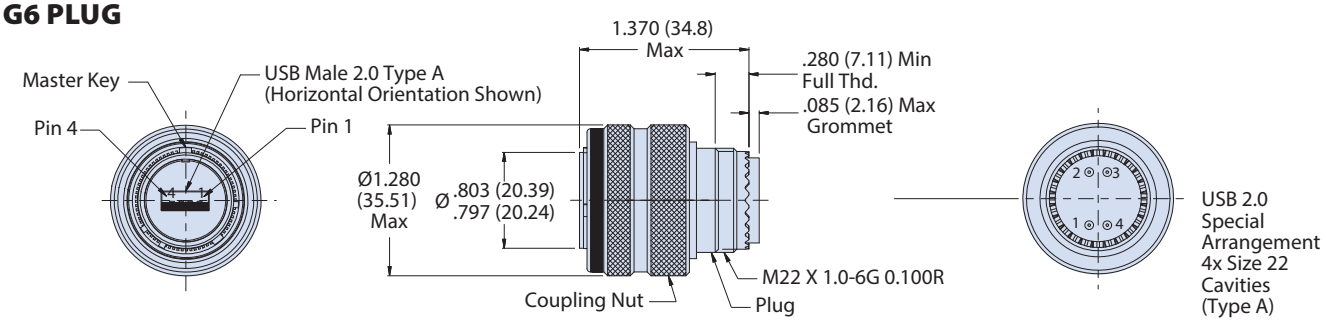

© 2016 Glenair, Inc • 1211 Air Way, Glendale, CA 91201 • 818-247-6000 • www.glenair.com • U.S. CAGE code 06324 • SuperSeal™ Catalog
Dimensions in Inches (millimeters) are subject to change without notice.

233-341 USB 2.0 Type A receptacle to size 22D crimp removable contacts

07 - REAR PANEL MOUNT, JAM NUT RECEPTACLE WITH ACCESSORY THREADS

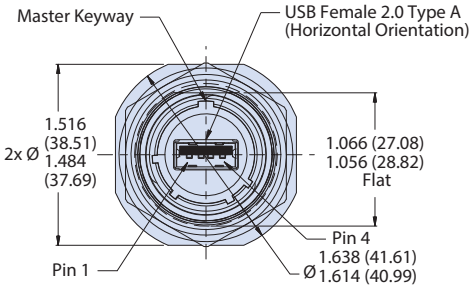

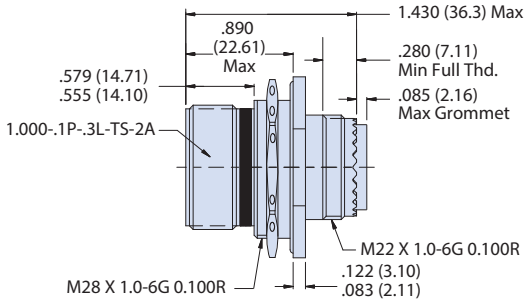

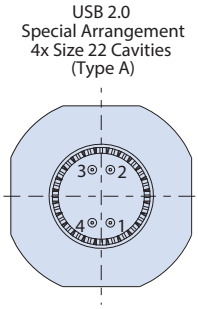

00 WALL MOUNT RECEPTACLE WITH ACCESSORY THREADS

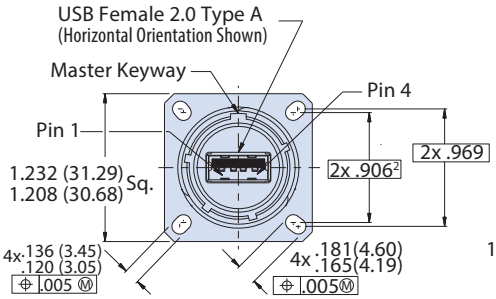

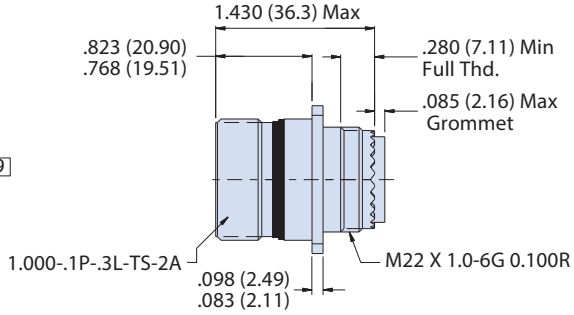

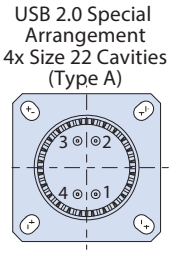

DO - WALL MOUNT RECEPTACLES WITH ACCESSORY THREADS

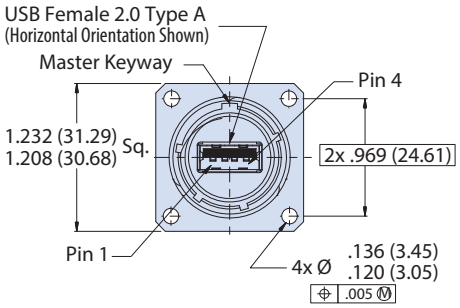

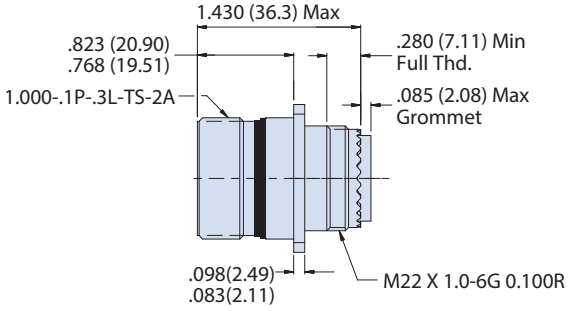

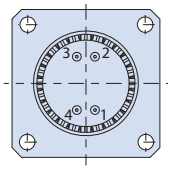

CM - WALL MOUNT RECEPTACLES WITH ACCESSORY THREADS

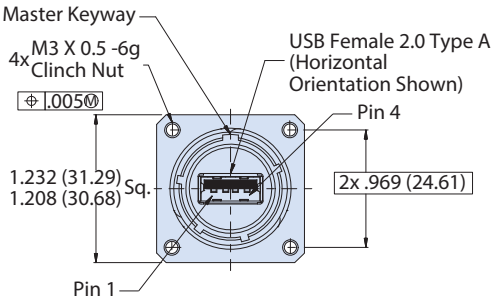

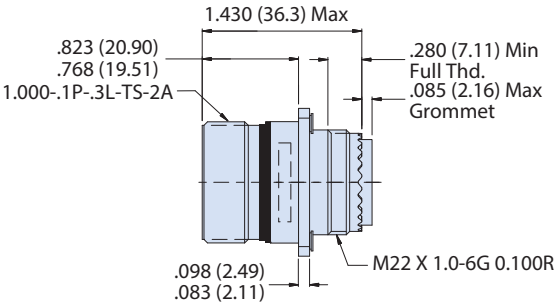

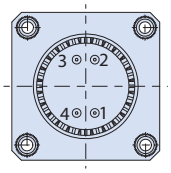

C

© 2016 Glenair, Inc • 1211 Air Way, Glendale, CA 91201 • 818-247-6000 • www.glenair.com • U.S. CAGE code 06324 • SuperSeal™ Catalog
Dimensions in Inches (millimeters) are subject to change without notice.

MIL-DTL-38999 Series III Type Connectors

233-342 Receptacle with PC tails



Jam Nut Receptacle
Rear View



Jam Nut Receptacle
Front View

C

Part Number Development								
Sample Part Number	**233-342**	**NF**	**00**	**-15**	**2**	**A**	**N**	**H**
Basic Number	**233-342**							
Finish	See Material and Finish table							
Connector Style[1]	See Connector Style table							
Shell Size	**15**							
USB Performance	**2** = USB 2.0							
USB Interface Type	**A** = Type A							
Alternate Key Position[1]	**A, B, C, D, E, N** = Normal; per MIL-DTL-38999							
USB Orientation	**H** = Horizontal **V** = Vertical							

Material and Finish	
NF	Aluminum/Cadmium, Olive Drab
M	Aluminum/Electroless Nickel
MT	Alumimun/Nickel PTFE
ZR	Aluminum/Black Zinc-Nickel

Connector Style	
07	Rear panel mount, jam nut receptacle
00	Wall mount receptacle with slotted holes
D0	Wall mount receptacle with round holes
CM	Wall mount receptacle with metric clinch nuts

USB Receptacle Orientation Options (Partial Views Shown)

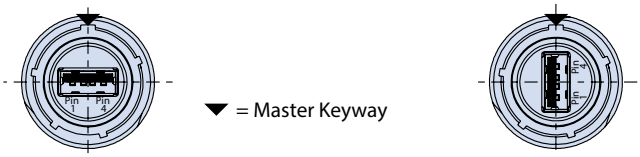

Horizontal Vertical

Recommended (Solder Side)

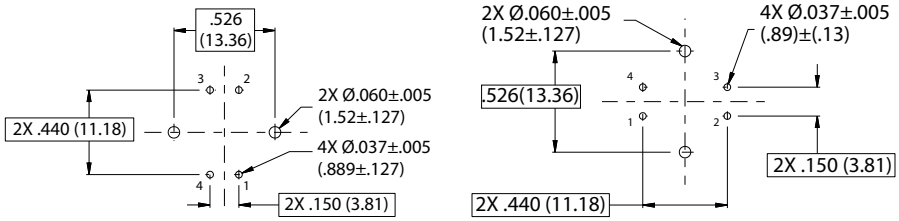

NOTES

1. See Section A for alternate key/keyway positions and panel cutout dimensions
2. Rear panel mount only
3. Meets IP67 in unmated condition, IP68 mated
4. Receptacle has USB female receptacle
5. Material/Finishes:
   - Insulators: high grade rigid dielectric/ n.a.
   - Contacts: copper alloy, gold plated
   - Seals: silicone based elastomer
   - USB (shell/contacts): copper alloy
   - Dielectric: hi-temp thermoplastic PA9T UL94V-0
   - Hardware: stainless steel/passivated

USB 2.0 Wiring				
Pin	Name	Cable Color (USB)	Description	Recommended Wire Sizes (AWG)
1	(V Bus)	Red	+5 V	22
2	(D-)	White	Data -	28
3	(D+)	Green	Data +	28
4	(GND)	Black	Ground	22

All external dimensions, features, etc. compliant with D38999/20, /24, &/26. Consult factory for additional information.

© 2016 Glenair, Inc • 1211 Air Way, Glendale, CA 91201 • 818-247-6000 • www.glenair.com • U.S. CAGE code 06324 • SuperSeal™ Catalog
Dimensions in Inches (millimeters) are subject to change without notice.

07 - REAR PANEL MOUNT, JAM NUT RECEPTACLE

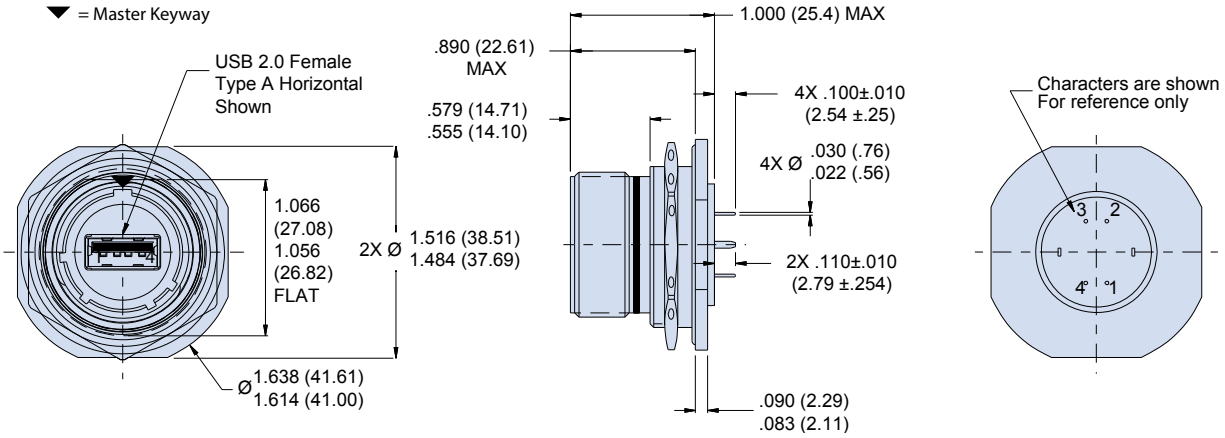

00, DO AND CM - WALL MOUNT RECEPTACLES

00 - Slotted Hole Receptacle Face View

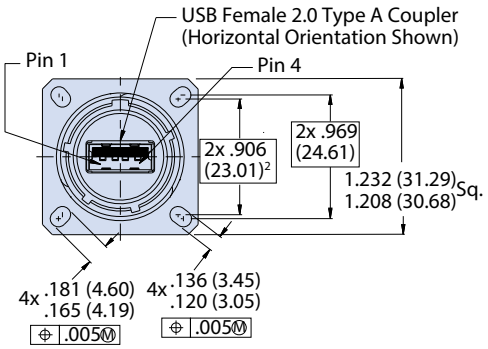

D0 - Round Hole Receptacle Face View

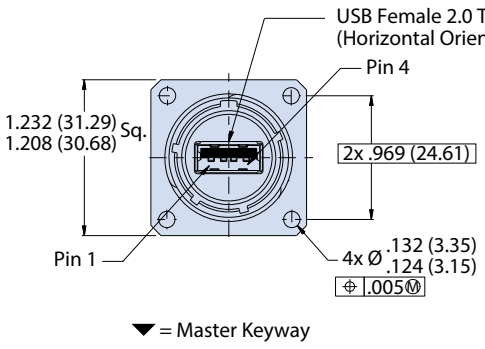

CM - Clinch Hole Receptacle Face View

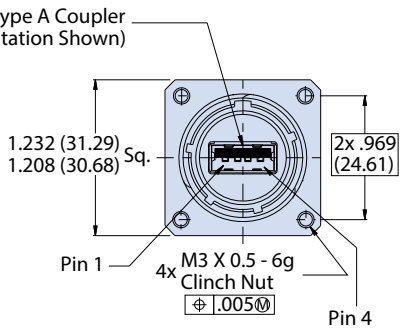

00 and D0 - Receptacle (Side View)

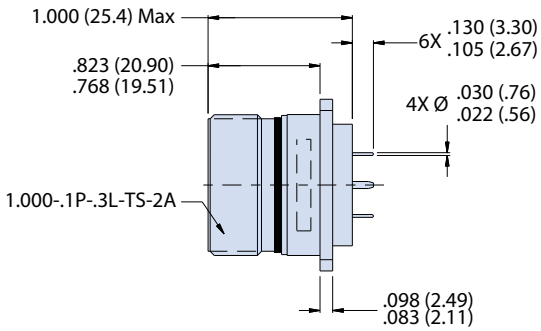

CM - Receptacle (Side View)

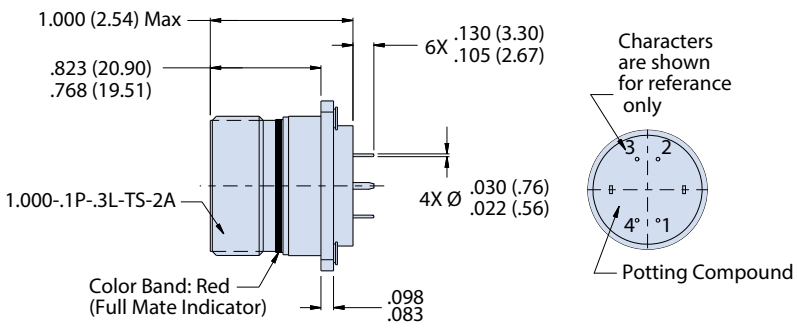

MIL-DTL-38999 Series III Type Connectors

233-343 Receptacle with solder cup termination



Jam Nut Receptacle
Front View



Jam Nut Receptacle
Rear View

Part Number Development								
Sample Part Number	**233-343**	**NF**	**00**	**-15**	**2**	**A**	**N**	**H**
Basic Number	**233-343**							
Finish	See Material and Finish table							
Connector Style[1]	See Connector Style table							
Shell Size	**15**							
USB Performance	**2** = USB 2.0							
USB Interface Type	**A** = Type A							
Alternate Key Position[1]	**A, B, C, D, E, N** = Normal; per MIL-DTL-38999							
USB Orientation	**H** = Horizontal **V** = Vertical							

USB Receptacle Orientation Options (Partial Views Shown)

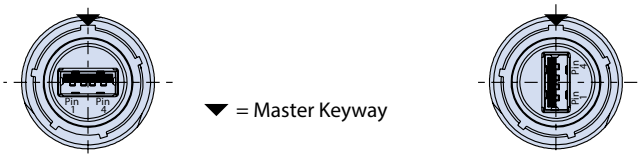

Horizontal Vertical

Material and Finish	
NF	Aluminum/cadmium, olive drab
M	Aluminum/electroless nickel
MT	Alumimun/nickel PTFE
ZR	Aluminum/black zinc-nickel

Connector Style	
07	Rear panel mount, jam nut receptacle
00	Wall mount receptacle with slotted holes
D0	Wall mount receptacle with round holes
CM	Wall mount receptacle with metric clinch nuts

USB 2.0 Wiring				
Pin	**Name**	**Cable Color (USB)**	**Description**	**Recommended Wire Sizes (AWG)**
1	(V Bus)	Red	+5 V	22
2	(D-)	White	Data -	28
3	(D+)	Green	Data +	28
4	(GND)	Black	Ground	22

All external dimensions, features, etc. compliant with D38999/20, /24, &/26. Consult factory for additional information.

NOTES

1. See Section A for alternate key/keyway positions and panel cutout dimensions
2. Front panel mount only
3. All external dimensions, features, etc. Compliant with D38999/20, /24 & /26. Consult factory for additional information
4. Meets IP67 in unmated condition, IP68 mated
5. Receptacle has USB female receptacle
6. Materials and finishes
   - Shell, jam nut: aluminum ally
   - insulators: high grade 4 rigid dielectric/n.a.
   - contacts: copper alloy, god plated
   - seals: silicone based elastomer
   - USB (shell/contacts: copper alloy
   - dielectric: hi-temp thermoplastic PA9T UL94V-0
   - Hardware: stainless steel/passivated

© 2016 Glenair, Inc • 1211 Air Way, Glendale, CA 91201 • 818-247-6000 • www.glenair.com • U.S. CAGE code 06324 • SuperSeal™ Catalog
Dimensions in Inches (millimeters) are subject to change without notice.

07 - REAR PANEL MOUNT, JAM NUT RECEPTACLE

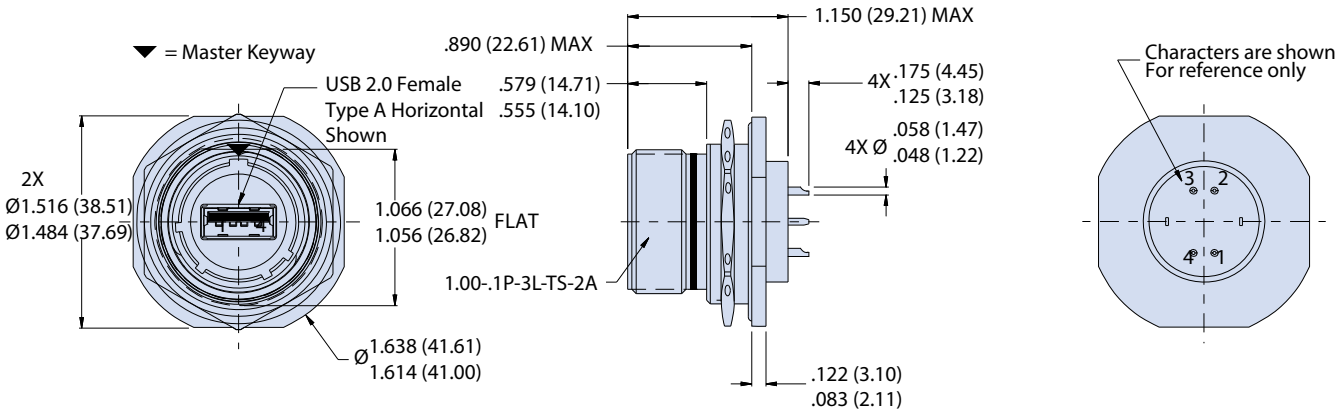

00, DO AND CM - WALL MOUNT RECEPTACLES

00 - Slotted Hole Receptacle Face View

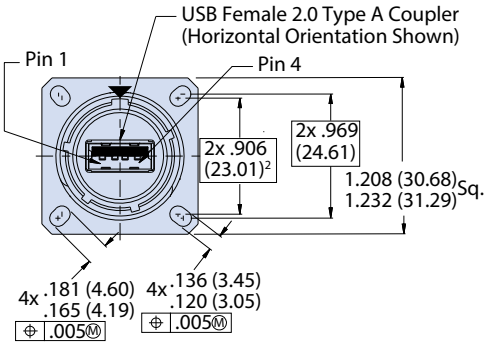

D0 - Round Hole Receptacle Face View

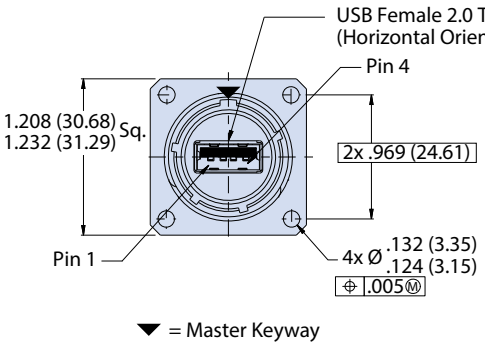

CM - Clinch Hole Receptacle Face View

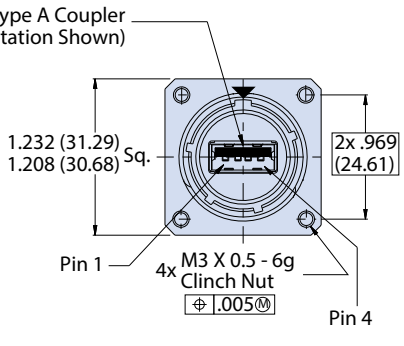

= Master Keyway

00 and D0 - Receptacle Side View

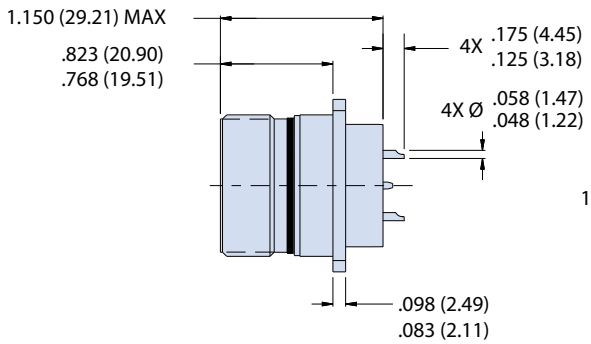

CM - Receptacle Side View

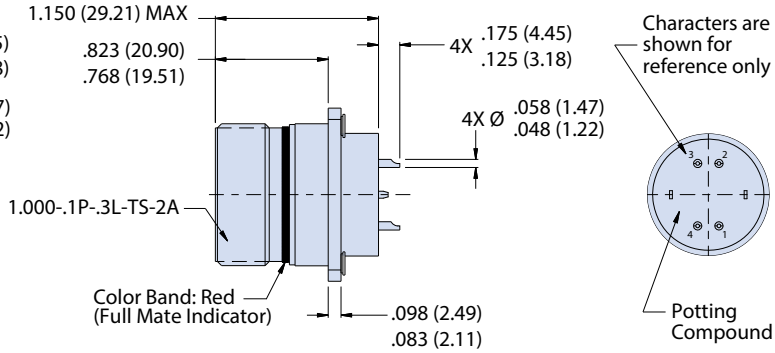

MIL-DTL-38999 Series III Type Connectors

233-344 Receptacle adapter with MIL-STD 1560 interface



Plug
Front View



Receptacle
Front View

Material and Finish	
NF	Aluminum/cadmium, olive drab
M	Aluminum/electroless nickel
MT	Alumimun/nickel PTFE
ZR	Aluminum/black zinc-nickel

Connector Style	
G6	Plug
07	Rear panel mount, jam nut receptacle
00	Wall mount receptacle with slotted holes[2]
D0	Wall mount receptacle with round holes
CM	Wall mount receptacle with metric clinch nuts

NOTES

1. See Section A for alternate key/keyway positions and panel cutout dimensions
2. Front panel mount only
3. Insert arrangement in accordance with MIL-STD-1560, 15-35. Contact factory for additional options
4. Meets IP67 in unmated condition, IP68 mated
5. For custom pin assignment consult factory
6. Both plug and receptacle shells have MIL-STD-1560 mating interface and rear USB female receptacles

Part Number Development										
Sample Part Number	233-344	NF	00	15	-35	2	A	P	N	T
Basic Number	233-344									
Finish	See Material and Finish table									
Connector Style[1]	See Connector Style table									
Shell Size	15									
Insert Arrangement[4]	35 = IAW MIL-STD-1560, 15-35									
USB Performance	2 = USB 2.0									
USB Rear Interface	A = Type A									
Contact Style	P = Pin S = Socket									
Alternate Polarization[1]	A, B, C, D, E, N = Normal; per MIL-DTL-38999									
Shrink Boot	T = Shrink Boot; Omit for none									

USB 2.0 Wiring Diagram

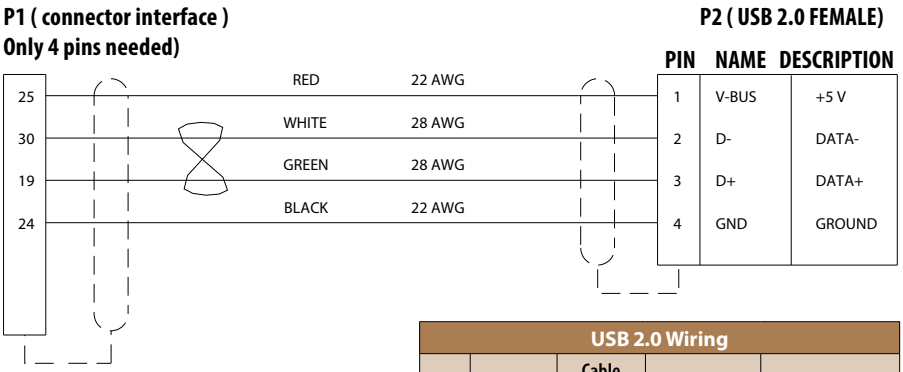

All external dimensions, features, etc. compliant with D38999/20, /24, &/26. Consult factory for additional information.

USB 2.0 Wiring				
Pin	Name	Cable Color (USB)	Description	Recommended Wire Sizes (AWG)
1	(V Bus)	Red	+5 V	22
2	(D-)	White	Data -	28
3	(D+)	Green	Data +	28
4	(GND)	Black	Ground	22

G6 PLUG WITH ACCESSORY THREADS

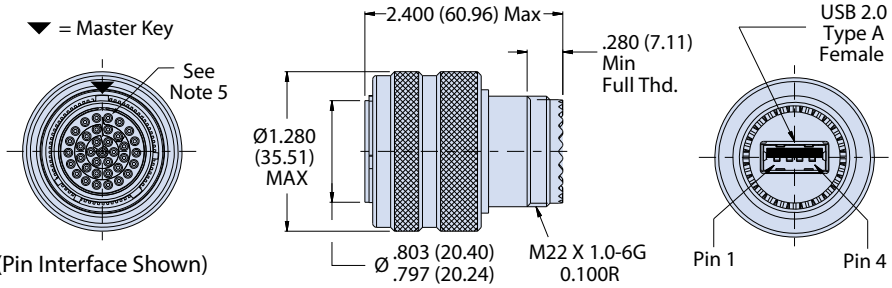

© 2016 Glenair, Inc • 1211 Air Way, Glendale, CA 91201 • 818-247-6000 • www.glenair.com • U.S. CAGE code 06324 • SuperSeal™ Catalog
Dimensions in Inches (millimeters) are subject to change without notice.

07 - REAR PANEL MOUNT, JAM NUT RECEPTACLE WITH ACCESSORY THREADS

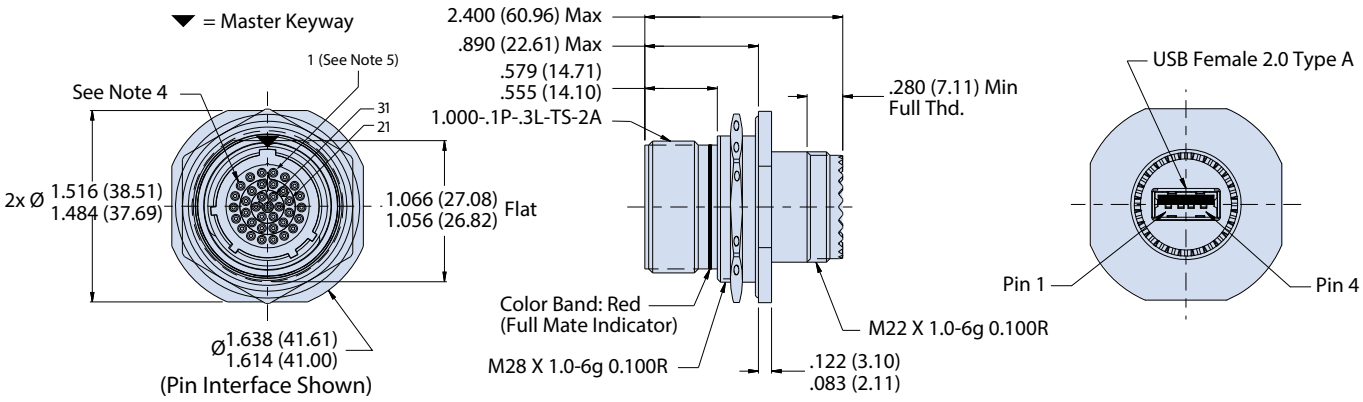

00, DO AND CM - WALL MOUNT RECEPTACLES WITH ACCESSORY THREADS

00 - Slotted Hole Receptacle (Mating Face)
(Pin Interface Shown)

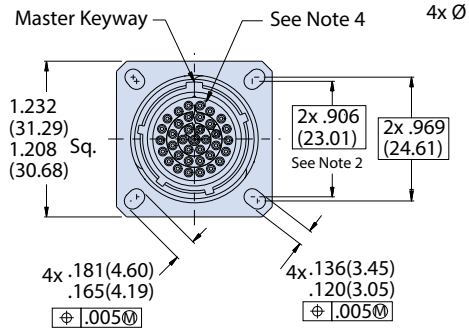

D0 - Round Hole Receptacle (Mating Face)
(Pin Interface Shown)

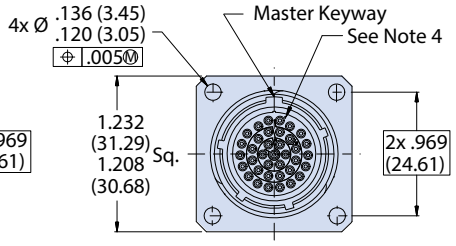

CM - Clinch Hole Receptacle (Mating Face)
(Pin Interface Shown)

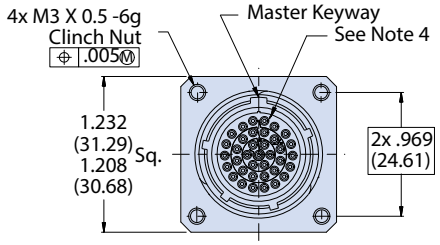

00 and D0 - Receptacle (Side View)

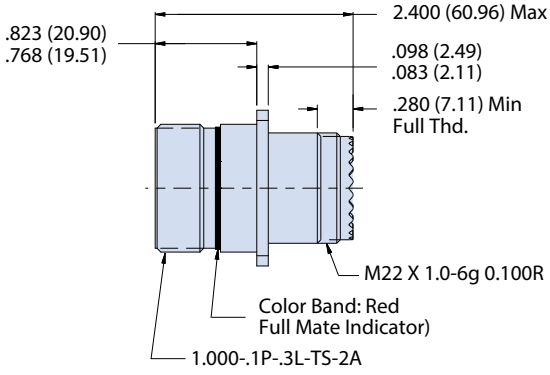

CM - Receptacle (Side View)

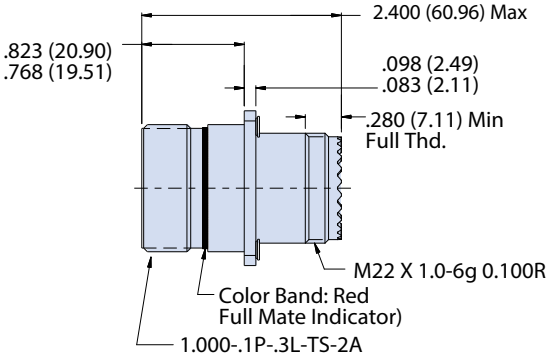

Rear View

USB 2.0
Female Type A
Pin locations
the same for all
wall mount
receptacles

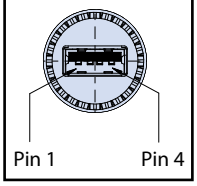

MIL-DTL-38999 Series III Type Connectors

233-345 Receptacle with crimp removable contacts



Receptacle Front View



Receptacle Rear View

Part Number Development									
Sample Part Number	**233-345**	**NF**	**00**	**-15**	**2**	**A**	**N**	**H**	**T**

Basic Number	**233-345**
Finish	See Material and Finish table
Connector Style[1]	See Connector Style table
Shell Size	**15**
USB Performance	**2** = USB 2.0
USB Interface Type	**A** = Type A
Alternate Polarization[1]	**A, B, C, D, E, N** = Normal; per MIL-DTL-38999
USB Orientation	**H** = Horizontal **V** = Vertical
Shrink Boot	**T** = Shrink Boot; Omit for none

Material and Finish	
NF	Aluminum/cadmium, olive drab
M	Aluminum/electroless nickel
MT	Alumimun/nickel PTFE
ZR	Aluminum/black zinc-nickel

Connector Style	
G6	Plug
07	Rear panel mount, jam nut receptacle
00	Wall mount receptacle with slotted holes
D0	Wall mount receptacle with round holes
CM	Wall mount receptacle with metric clinch nuts

USB 2.0 Wiring				
Pin	Name	Cable Color (USB)	Description	Recommended Wire Sizes (AWG)
1	(V Bus)	Red	+5 V	22
2	(D-)	White	Data -	28
3	(D+)	Green	Data +	28
4	(GND)	Black	Ground	22

USB Receptacle Orientation Options (Partial Views Shown)

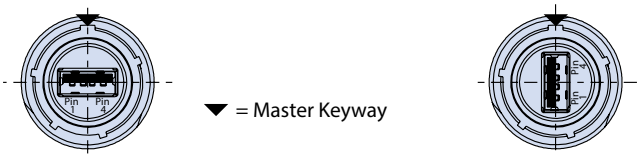

NOTES

1. See Section A for alternate key/keyway positions and panel cutout dimensions
2. Front panel mount only
3. Crimp removable size 22 socket contacts (M39029/56-348) supplied loose
4. Meets IP67 in unmated condition, IP68 mated
5. Receptacle has USB female receptacle mating interface

All external dimensions, features, etc. compliant with D38999/20, /24, &/26. Consult factory for additional information.

G6 PLUG WITH ACCESSORY THREADS

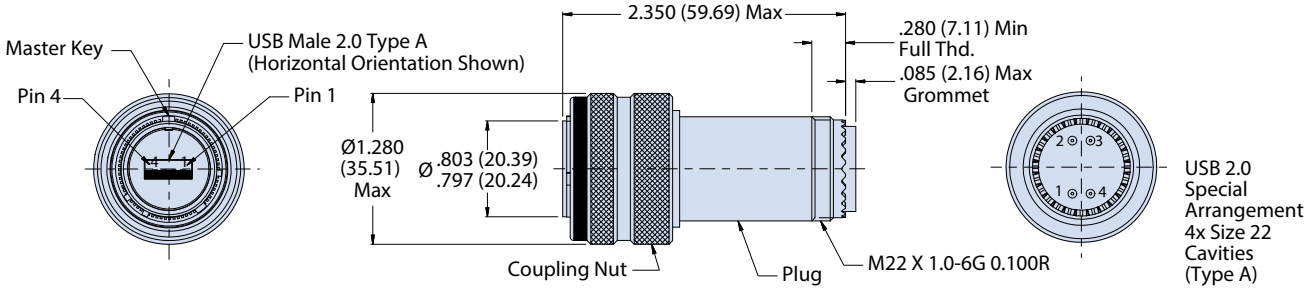

© 2016 Glenair, Inc • 1211 Air Way, Glendale, CA 91201 • 818-247-6000 • www.glenair.com • U.S. CAGE code 06324 • SuperSeal™ Catalog
Dimensions in Inches (millimeters) are subject to change without notice.

07 - REAR PANEL MOUNT, JAM NUT RECEPTACLE WITH ACCESSORY THREADS

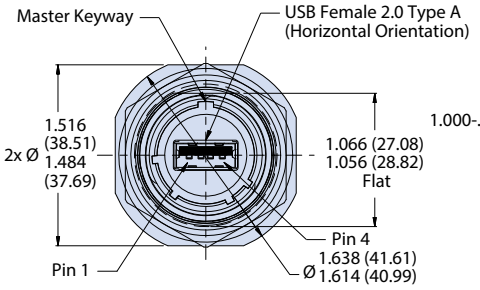

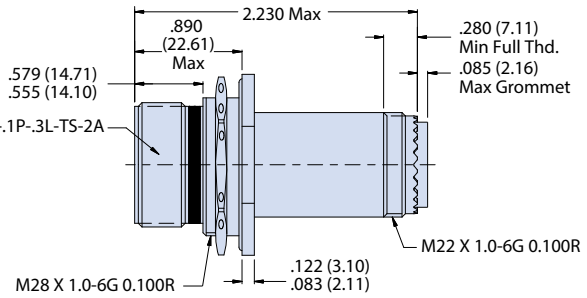

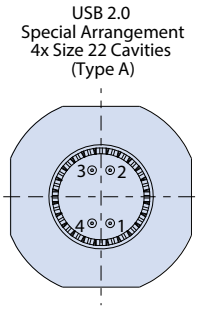

00 WALL MOUNT RECEPTACLE WITH ACCESSORY THREADS

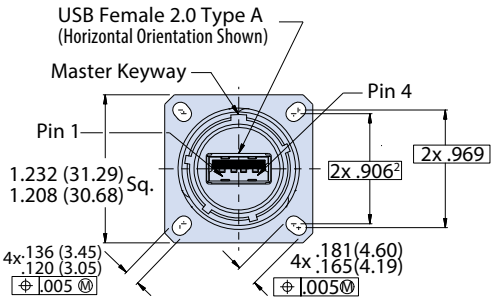

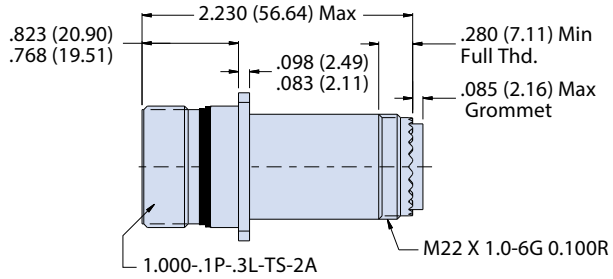

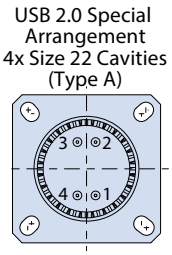

DO - WALL MOUNT RECEPTACLES WITH ACCESSORY THREADS

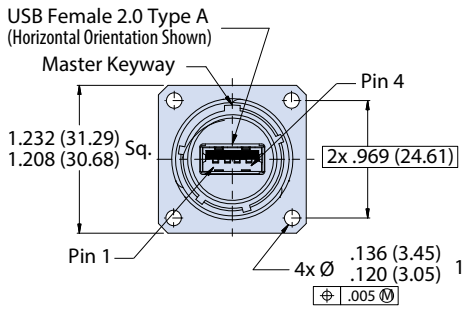

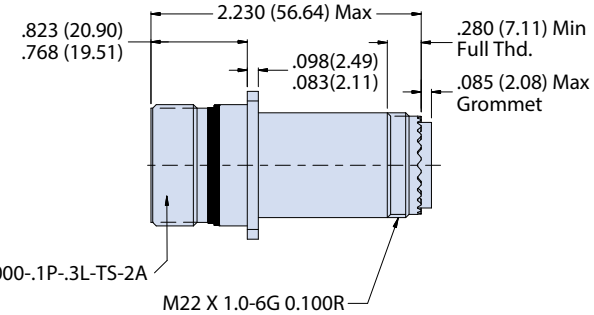

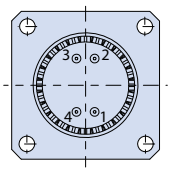

CM - WALL MOUNT RECEPTACLES WITH ACCESSORY THREADS

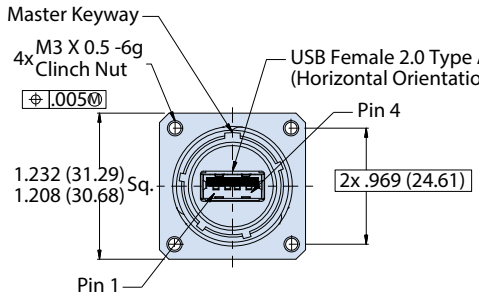

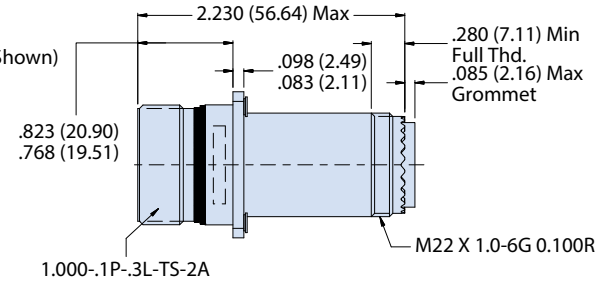

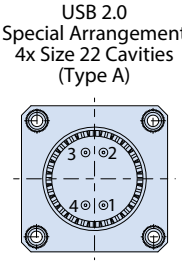

C

© 2016 Glenair, Inc • 1211 Air Way, Glendale, CA 91201 • 818-247-6000 • www.glenair.com • U.S. CAGE code 06324 • SuperSeal™ Catalog
Dimensions in Inches (millimeters) are subject to change without notice.

MIL-DTL-38999 Series III Type Connectors

233-370 Feed-through receptacle



Feed-through
Front View

Part Number Development									
Sample Part Number	**233-370**	**NF**	**00**	**-17**	**2**	**A**	**A**	**N**	**H**
Basic Number	**233-370**								
Finish	See Material and Finish table								
Connector Style[1]	See Connector Style table								
Shell Size	**15** or **17**								
USB Performance	**2** = USB 2.0								
USB Front Interface	**A** = Type A								
USB Rear Interface	**A** = Type A								
Alternate Polarization[1]	**A**, **B**, **C**, **D**, **E**, **N** = Normal								
USB Orientation	**H** = Horizontal **V** = Vertical								

USB Receptacle Orientation Options (Partial Views Shown)

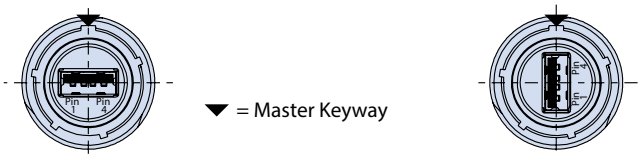

Horizontal Vertical

C

Material and Finish	
NF	Aluminum/cadmium, olive drab
M	Aluminum/electroless nickel
MT	Alumimun/nickel PTFE
ZR	Aluminum/black zinc-nickel

Connector Style	
07	Rear panel mount, jam nut receptacle
00	Wall mount receptacle with slotted holes[2]
D0	Wall mount receptacle with round holes
CM	Wall mount receptacle with metric clinch nuts

NOTES

1. See Section A for alternate key/keyway positions and panel cutout dimensions
2. Front panel mount only
3. Meets IP67 in unmated condition, IP68 mated
4. Feedthru has front and rear USB female mating interface

USB 2.0 Wiring				
Pin	Name	Cable Color (USB)	Description	Recommended Wire Sizes (AWG)
1	(V Bus)	Red	+5 V	22
2	(D-)	White	Data -	28
3	(D+)	Green	Data +	28
4	(GND)	Black	Ground	22

Jam Nut Mount							
Shell Size	Ø H		J		K Flat		L Thread
	in	mm	in	mm	in	mm	
15	1.638	41.61	1.516	38.51	1.066	27.08	M28 X 1.0-6G 0.100R
	1.614	41.00	1.484	37.69	1.056	26.82	
17	1.764	44.81	1.642	41.71	1.191	30.25	M32 X 1.0-6G 0.100R[4]
	1.740	44.20	1.610	40.89	1.181	30.00	

Wall Mount													
Shell Size	A Thread	B Sq		C Bsc		D Bsc[2]		E		F		Ø G Holes	
		in	mm	in	mm	in	mm	in	mm	in	mm	in	mm
15	1.0000-.1P-.3L-TS-2A	1.232 1.208	31.29 30.68	.969	24.61	.906	23.01	.136 0.120	3.45 3.05	0.181 0.165	4.60 4.19	0.136 0.120	3.45 3.05
17	1.1875-.1P-.3L-TS-2A	1.323 1.299	33.60 32.99	1.062	26.97	.969	24.61			0.202 0.186	5.13 4.72		

© 2016 Glenair, Inc • 1211 Air Way, Glendale, CA 91201 • 818-247-6000 • www.glenair.com • U.S. CAGE code 06324 • SuperSeal™ Catalog
Dimensions in Inches (millimeters) are subject to change without notice.

07 - REAR PANEL MOUNT, JAM NUT RECEPTACLE

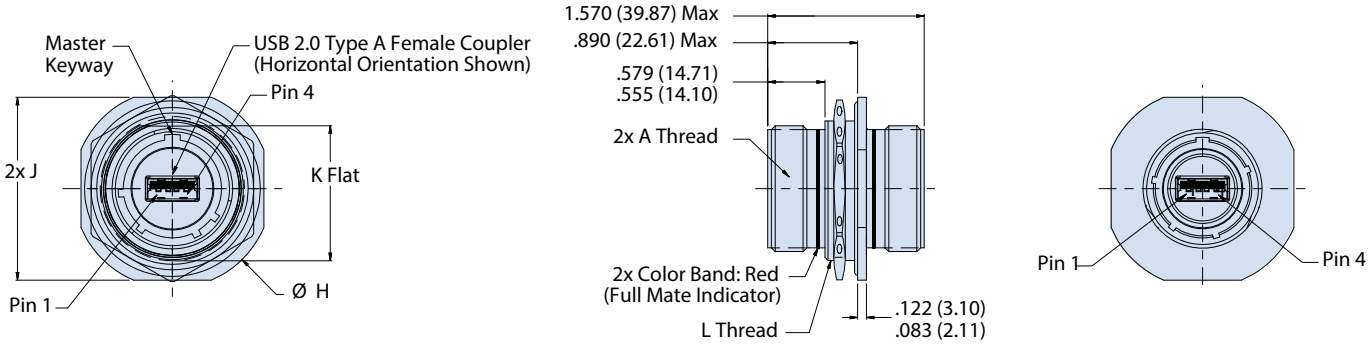

00, DO AND CM - WALL MOUNT RECEPTACLES

00 - Slotted Hole Receptacle Face View

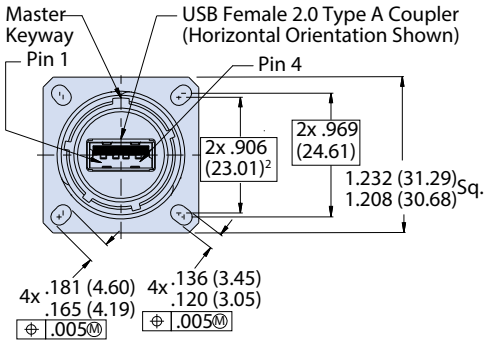

D0 - Round Hole Receptacle Face View

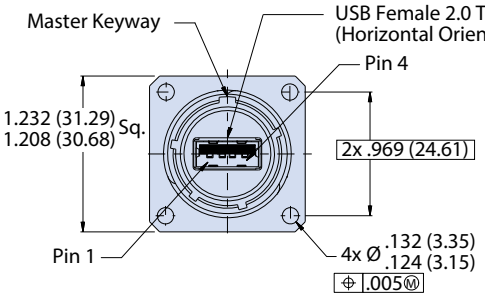

CM - Clinch Hole Receptacle Face View

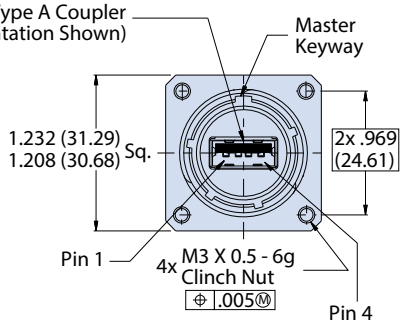

00 and D0 - Receptacle Side View

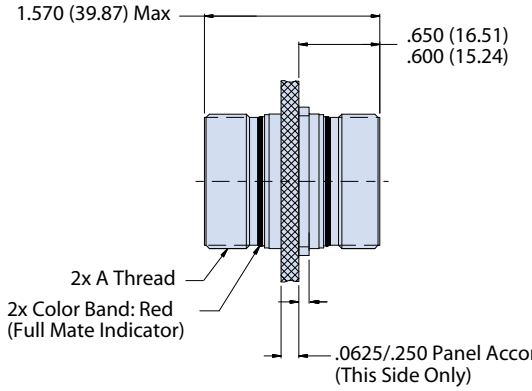

CM - Receptacle Side View

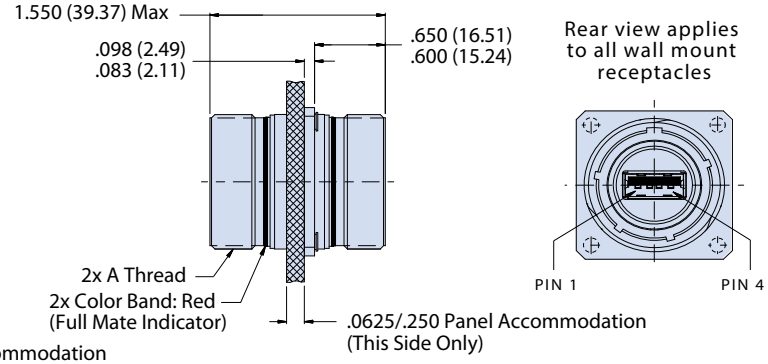

All external dimensions, features, etc. compliant with D38999/20, /24, &/26. Consult factory for additional information.

MIL-DTL-38999 Series III Type Connectors

233-390 USB 2.0 Memory stick

Part Number Development							
Sample Part Number	**233-390**	**NF**	**32**	**-15**	**N**	**H**	**P**
Series / Basic Part No.	**233-390**						
Finish	**NF** = Aluminum/cadmium olive drab **ME** = Aluminum/electroless nickel **MT** = Aluminum/nickel PTFE **ZR** = Aluminum/zinc-nickel						
Storage Capacity Options	**128** = 128Gb **64** = 64Gb **32** = 32 Gb, **16** = 16 Gb, **8** = 8Gb						
Shell Size	**15**, **17**, **19**, **21**, **23**, **25**						
Alternate Key Position	**A**, **B**, **C**, **D**, **E**, **N** = Normal; Per MIL-DTL-38999						
USB Orientation	**H** = Horizontal **V** = Vertical						
Protective Cover Option	**P** = Series 660-023 cover (omit for none)						



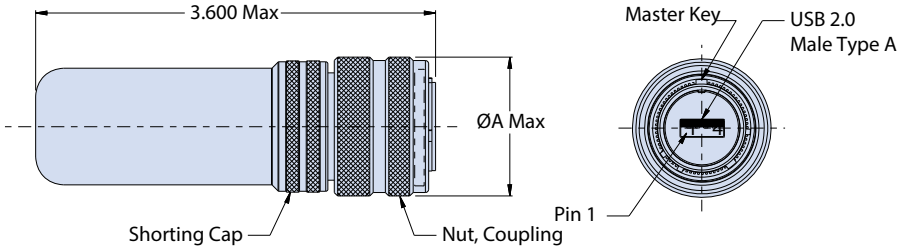

View shown with Protective Cap

Dimensions	
Shell Size	**ØA Max**
15	1.280 (32.5)
17	1.406 (35.7)
19	1.516 (38.5)
21	1.642 (41.7)
23	1.768 (44.9)
25	1.890 (48.0)

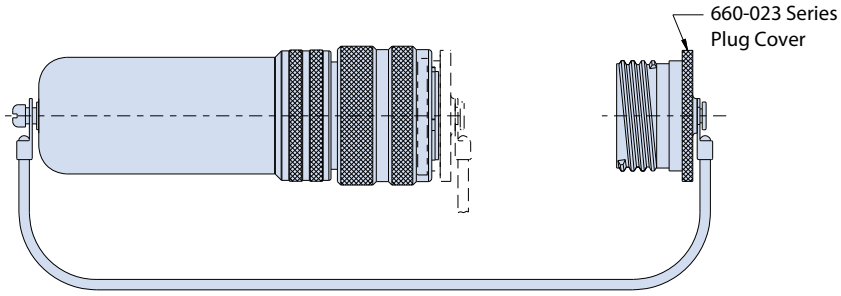

NOTES

1. System requirements: Windows 2000, XP, Vista, Windows 7.
2. Compatibility: plug and play; USB 2.0 Compliance.
3. Interface: USB 2.0, Type A male.
4. Data transfer rates: USB 2.0: Up to 25 Mb/sec read, 10Mb/sec write.
5. Password protection and AES encryption.
6. Mates with 233-340,-341,-342,-343 & -345
7. Environmental parameters: Operating temperatures: -40°C to 85°C (see part number development)
8. Storage temperatures: -40°C to 85°C
9. Humidity range operating: 10% to 95%
10. Memory stick uses USB male plug
11. Material/Finish
    - Barrel, coupling nut:
    - Insulators: high grade rigid dielectric/ N.A.
    - Seal: fluorosilicone/N.A.
    - EMI grounding spring: BeCu /electroless nickel plate.
    - Hardware: stainless steel/passivated

© 2016 Glenair, Inc • 1211 Air Way, Glendale, CA 91201 • 818-247-6000 • www.glenair.com • U.S. CAGE code 06324 • SuperSeal™ Catalog
Dimensions in Inches (millimeters) are subject to change without notice.

2330-0069 USB 2.0 Cable assembly



2330-0069 Glenair SuperSeal™ USB 2.0 cable jumpers, with SuperNine® connectors to standard USB Type A plug

SuperSeal USB connectors are IP67 open face rated and IP68 in the mated condition for complete protection in harsh environments. SuperSeal connector styles include plug, wall mount and jam-nut receptacles. Wall mount receptacles are available with slotted holes and straight cable exit. USB 2.0 can be ordered in horizontal or vertical orientation to provide further security against mis-mating and conform to existing USB orientations. Please consult factory for custom configurations.

All external dimensions, features, etc. compliant with D38999/20, /24, &/26. Consult factory for additional information.

Material and Finish	
NF	Aluminum/cadmium, olive drab
ME	Aluminum/electroless nickel
ZR	Zinc nickel, black (tri-valent chromium) RoHS compliant
XM	Composite/electroless nickel
Z1	Stainless steel / passivate
AB	Marine bronze/none

Part Number Development							
Sample Part Number	**2330-0069**	**M**	**07**	**N**	**H**	**A**	**-XX**
Basic Number	**2330-0069**						
P1 Finish	See Material and Finish table						
P1 Connector Style	**07** = Receptacle, Jam Nut **00** = Square Flange w/ Slotted Holes **D0** = Square Flange with Round Holes **G6** = Plug						
Polarization	**A**, **B**, **C**, **D**, **E**, **N** = Normal						
P1 USB 2.0 Orientation	**H** = Horizontal **V** = Vertical						
P2 Connector Style	**A** = USB 2.0 Type A plug **B** = USB 2.0 Type B plug						
Overall Length	**12** = 12 inches **24** = 24 inches **XX** = XX inches (197 Inches max.)						

NOTES

1. Interpret drawing per ASME Y14.5 - 2009
2. USB 2.0 Electrical specifications:
   DWV 500 VAC
   I.R. 100 Megohms min.
3. Meets IP67 in unmated condition, IP68 mated
4. Cable assembly to be tested 100% for electrical shorts, continuity, IR, and DWV.
   100% functional USB testing per ATP-555

© 2016 Glenair, Inc • 1211 Air Way, Glendale, CA 91201 • 818-247-6000 • www.glenair.com • U.S. CAGE code 06324 • SuperSeal™ Catalog
Dimensions in Inches (millimeters) are subject to change without notice.

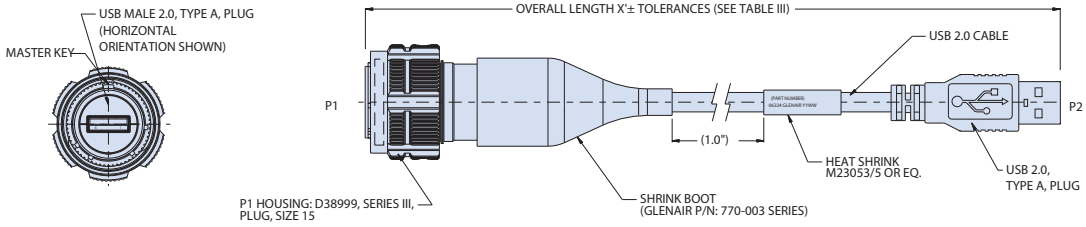

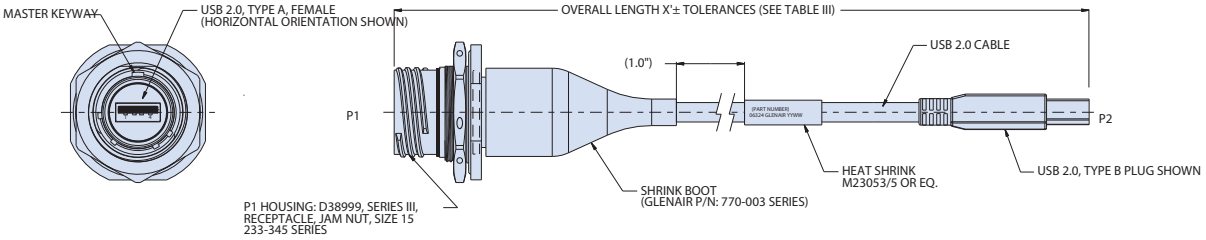

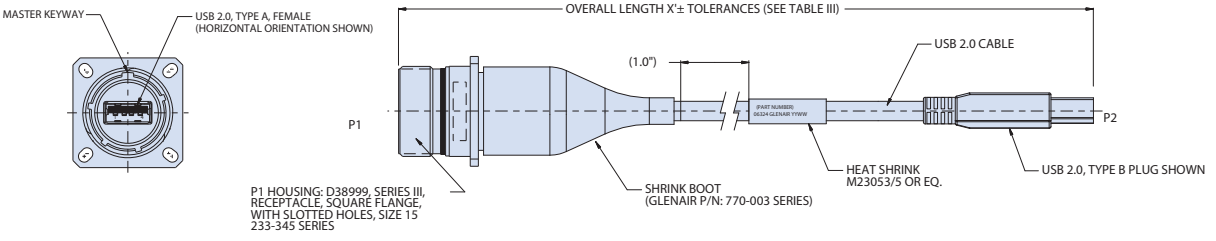

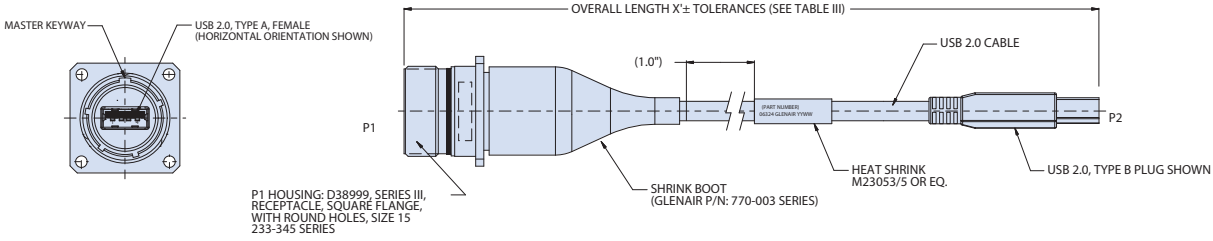

USB 2.0 ORIENTATION OPTIONS (P1)
(PARTIAL FRONT VIEWS SHOWN)

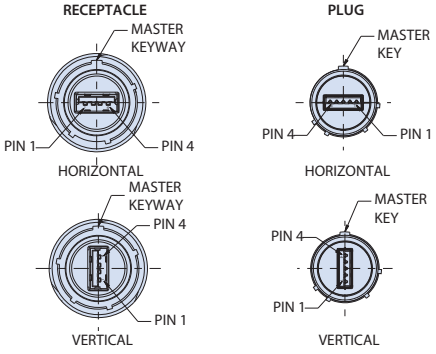

WIRING DIAGRAM

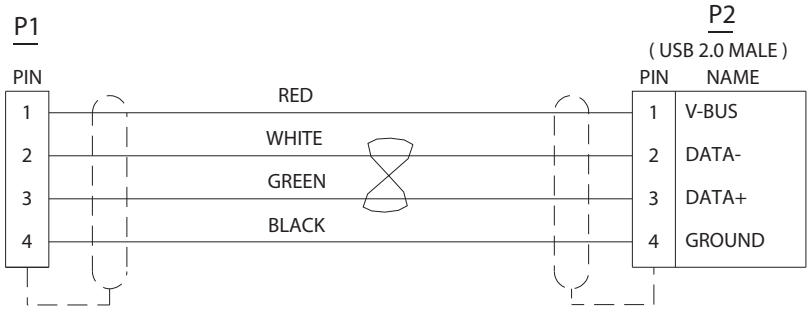

2330-0015 USB 2.0 Cable assembly



2330-0015 Glenair SuperSeal™ USB 2.0 cable jumpers, with SuperNine® connectors to standard USB Type A plug

SuperSeal USB connectors are IP67 open face rated and IP68 in the mated condition for complete protection in harsh environments. SuperSeal connector styles include plug, wall mount and jam-nut receptacles. Wall mount receptacles are available with slotted holes and straight cable exit. USB 2.0 can be ordered in horizontal or vertical orientation to provide further security against mis-mating and conform to existing USB orientations. Please consult factory for custom configurations.

All external dimensions, features, etc. compliant with D38999/20, /24, &/26. Consult factory for additional information.

Material and Finish	
NF	Aluminum/cadmium, olive drab
ME	Aluminum/electroless nickel
ZR	Zinc nickel, black (tri-valent chromium) RoHS compliant

Connector Style	
G6	Plug
07	Rear panel mount, jam nut receptacle
00	Wall mount receptacle with slotted holes[2]
CM	Receptacle, wall mount, with metric clinch nuts
D0	Receptacle, wall mount, with slotted holes

NOTES

1. See Section A for panel cutout dimensions
2. Meets IP67 in unmated condition, IP68 mated
3. Standard configurations provided with potted back end
4. SuperSeal plug houses USB plug. Superseal receptacle houses USB receptacle

Part Number Development												
Sample Part Number	**2330-0015**	**NF**	**D0**	**S**	**-15**	**2**	**A**	**N**	**H**	**A**	**S**	**-03**
Basic Number	**2330-0015**											
P1 Finish	See Material and Finish table											
P1 Connector Style[1]	See Connector Style table											
P1 Cable Exit	**S** = Staight											
Shell Size	**15**											
USB Performance	**2** = USB 2.0											
USB Interface	**A** = Type A											
Polarization	**A**, **B**, **C**, **D**, **E**, **N** = Normal											
USB Orientation	**H** = Horizontal **V** = Vertical											
P2 Connector Style	**A** - Type A USB plug **Omit** = Flying leads											
P2 Cable Exit	**S** = Straight **Omit** = Flying leads											
Standard Lengths	See Table I											

For custom configurations please consult factory.

TABLE I: Overall Length Tolerances		
Dash No.	Overall Length (Feet)	Tolerances
01	1.0	+1″/-0
02	2.0	+2″/-0
03	3.0	
04	5.0	
05	7.0	+4″/-0
06	10.0	
07	15.0	+6″/-0

© 2016 Glenair, Inc • 1211 Air Way, Glendale, CA 91201 • 818-247-6000 • www.glenair.com • U.S. CAGE code 06324 • SuperSeal™ Catalog
Dimensions in Inches (millimeters) are subject to change without notice.

AVAILABLE P1 CONNECTOR DIMENSIONS, SHELL SIZE 15

CM - Wall Mount Receptacle with Metric Clinch Nuts

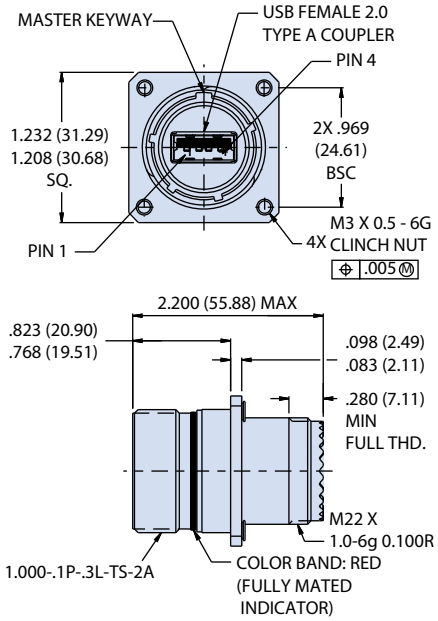

07 Receptacle, Jam-Nut Mount

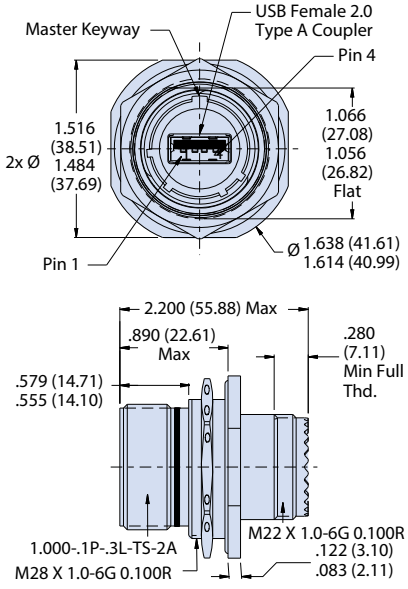

00 Receptacle, Wall Mount with Slotted Holes

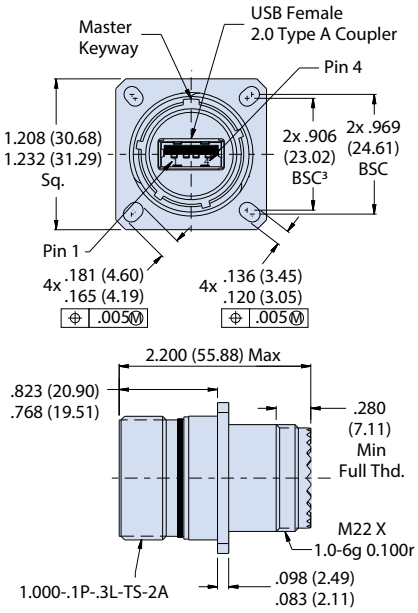

WIRING DIAGRAM

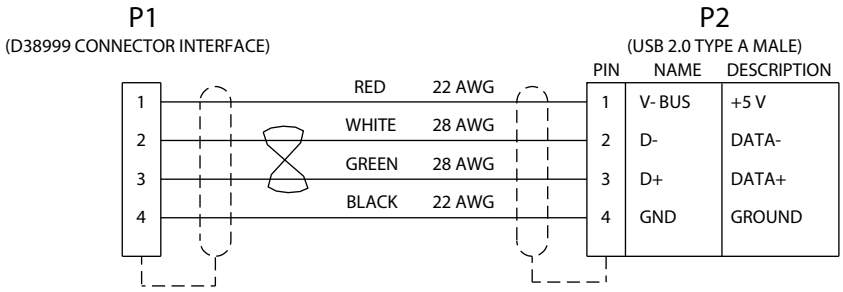

USB Orientation Options (Partial Views Shown)

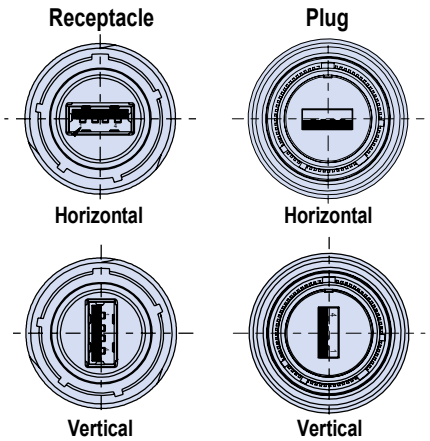

C

© 2016 Glenair, Inc • 1211 Air Way, Glendale, CA 91201 • 818-247-6000 • www.glenair.com • U.S. CAGE code 06324 • SuperSeal™ Catalog
Dimensions in Inches (millimeters) are subject to change without notice.

2330-0015 USB 2.0 Cable assembly

00 WALL MOUNT RECETPACLE WITH SLOTTED HOLES (STRAIGHT SYTLE SHOWN)

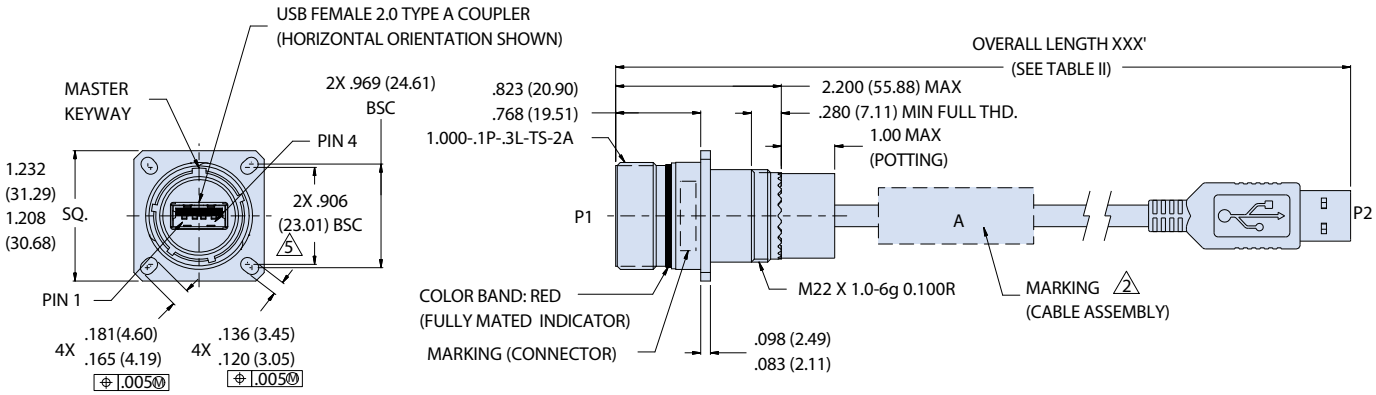

G6 PLUG (STRAIGHT STYLE SHOWN)

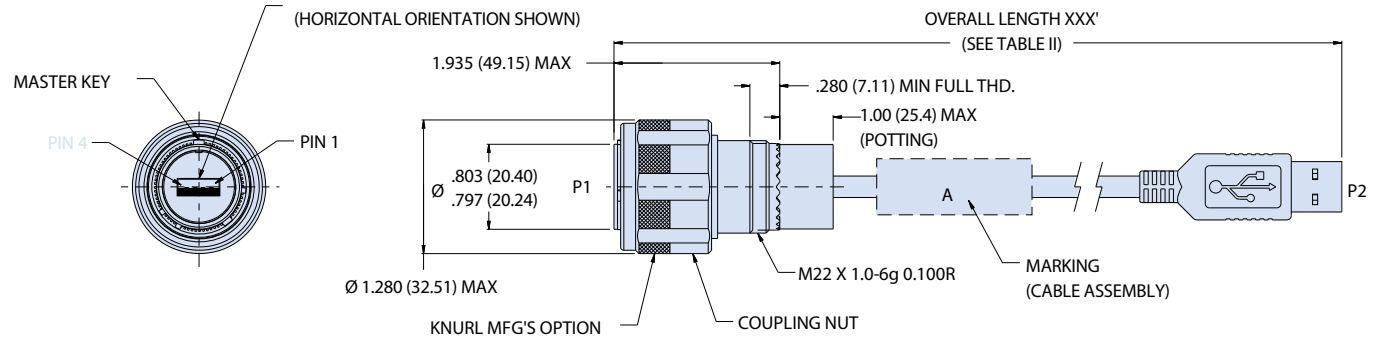

00, D0, CM, 07 RECEPTACLE & G6 PLUG (FLYING LEADS SHOWN)

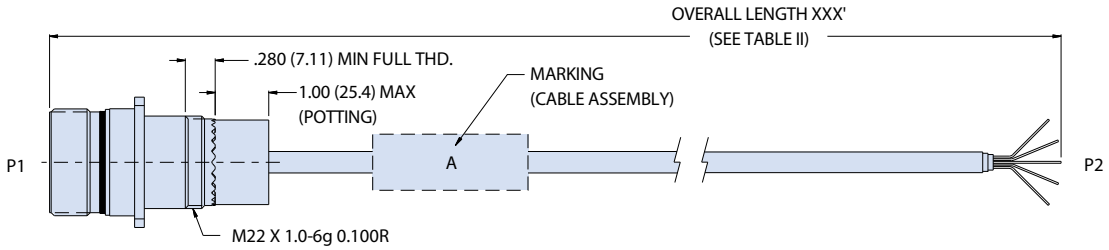

© 2016 Glenair, Inc • 1211 Air Way, Glendale, CA 91201 • 818-247-6000 • www.glenair.com • U.S. CAGE code 06324 • SuperSeal™ Catalog
Dimensions in Inches (millimeters) are subject to change without notice.

MIL-DTL-38999 Series III Type Connectors

Product Selection Guide



233-350 C-22

SuperSeal™ Panel Mount USB 3.0 Receptacle Connectors

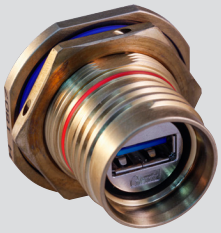

233-352 C-24

SuperSeal Receptacle with USB 3.0 Female Interface to PC Tail Termination

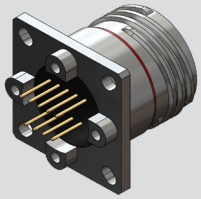

233-357 C-26

SuperSeal Panel Mount Receptacles with USB 3.0 to PC Tail Termination and Threaded Standoff



233-353 C-28

SuperSeal Receptacle with USB 3.0 Female Interface to Solder Cup Termination

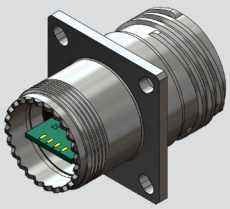

233-354 C-30

SuperSeal Panel Mount Receptacles with USB 3.0 to Breakout Board Termination and Accessory Threads



233-355 C-32

SuperSeal USB 3.0 Female-to-Female Feed-thru Coupler



233-358 C-34

SuperSeal Plug Adapter for USB 3.0 Terminated Cordset



2330-0445 C-35

SuperSeal USB 3.0 Cable Assembly



2330-0445 C-37

SuperSeal USB 3.0 Cable Assembly with active repeater



233-92 C-38

SuperSeal USB 3.0 Memory Stick

C

© 2016 Glenair, Inc • 1211 Air Way, Glendale, CA 91201 • 818-247-6000 • www.glenair.com • U.S. CAGE code 06324 • SuperSeal™ Catalog
Dimensions in Inches (millimeters) are subject to change without notice.

MIL-DTL-38999 Series III Type Connectors

233-350 Panel mount receptacle couplers with accessory threads



Part Number Development									
Sample Part Number	**233-350**	**NF**	**00**	**-15**	**3**	**A**	**N**	**H**	
Basic Number	**233-350**								
Finish	See Material and Finish table								
Connector Style[1]	See Connector Style table								
Shell Size	**15**								
USB Performance	**3** = USB 3.0								
USB Interface (Front and Back)	**A** = Type A								
Alternate Key Position[1]	**A, B, C, D, E, N** = Normal per MIL-DTL-38999								
USB Orientation	**H** = Horizontal **V** = Vertical								
Shrink Boot	**T** = Part No. 770-028 (Omit for None)								

C

Material and Finish	
NF	Aluminum/Cadmium, Olive Drab
ME	Aluminum/Electroless Nickel
MT	Alumimun/Nickel PTFE
ZR	Aluminum/Black Zinc-Nickel
AB	Marine Bronze
XM	Composite/Electroless Nickel

Additional material / finish options available consult factory

Connector Style	
07	Rear panel mount, jam nut receptacle
00	Wall mount receptacle with slotted holes
D0	Wall mount receptacle with thru-holes
CM	Wall mount receptacle with metric clinch nuts

All external dimensions, features, etc. compliant with D38999/20, /24, &/26. Consult factory for additional information.

USB Receptacle Orientation Options

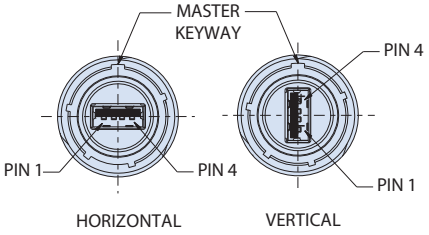

07 - REAR PANEL MOUNT, JAM NUT RECEPTACLE

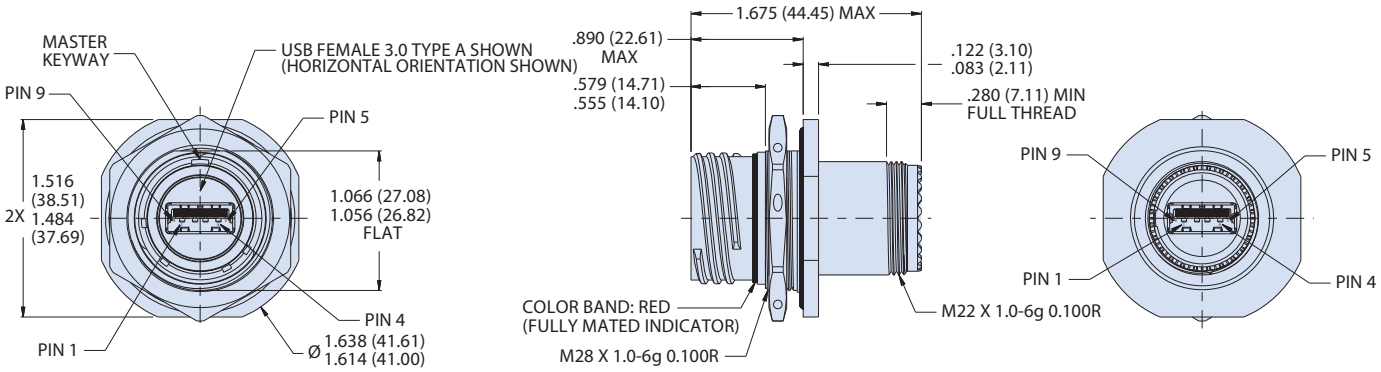

NOTES

1. See Section A for alternate key/keyway positions and panel cutout dimensions
2. Meets IP67 in unmated condition, IP68 mated
3. USB female port, front and back
4. Front panel mount only
5. Material and Finish
   - Shell, jam nut: al alloy
   - Insulators: high grade rigid dielectric/n.a.
   - Contacts: copper alloy, gold plated
   - Seals: silicone based elastomer
   - USB (shell/contacts): copper alloy
   - Dielectric: hi-temp thermoplastic PA9T UL94V-0
   - Hardware: stainless steel /passivated

© 2016 Glenair, Inc • 1211 Air Way, Glendale, CA 91201 • 818-247-6000 • www.glenair.com • U.S. CAGE code 06324 • SuperSeal™ Catalog
Dimensions in Inches (millimeters) are subject to change without notice.

00 - WALL MOUNT RECEPTACLE WITH SLOTTED THRU-HOLES

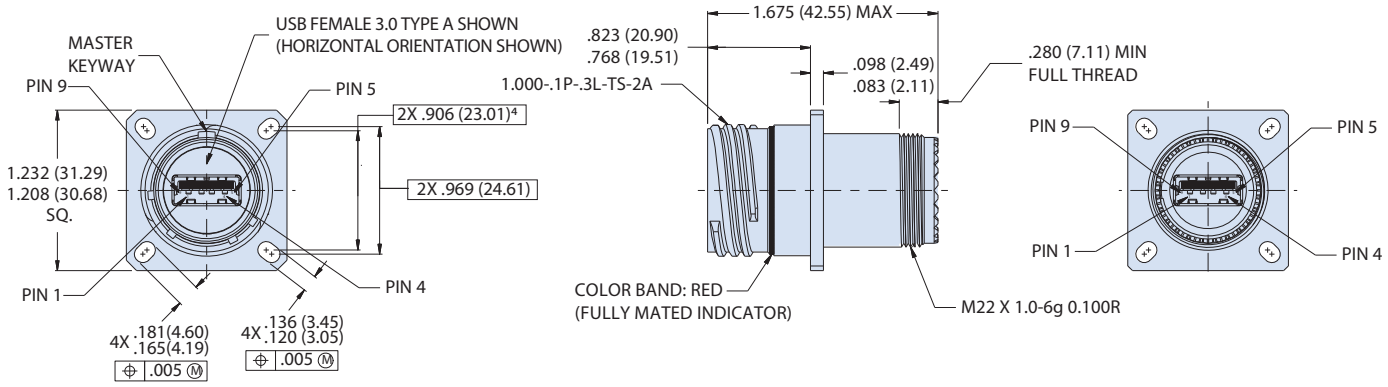

DO - WALL MOUNT RECEPTACLE WITH ROUND THRU-HOLES

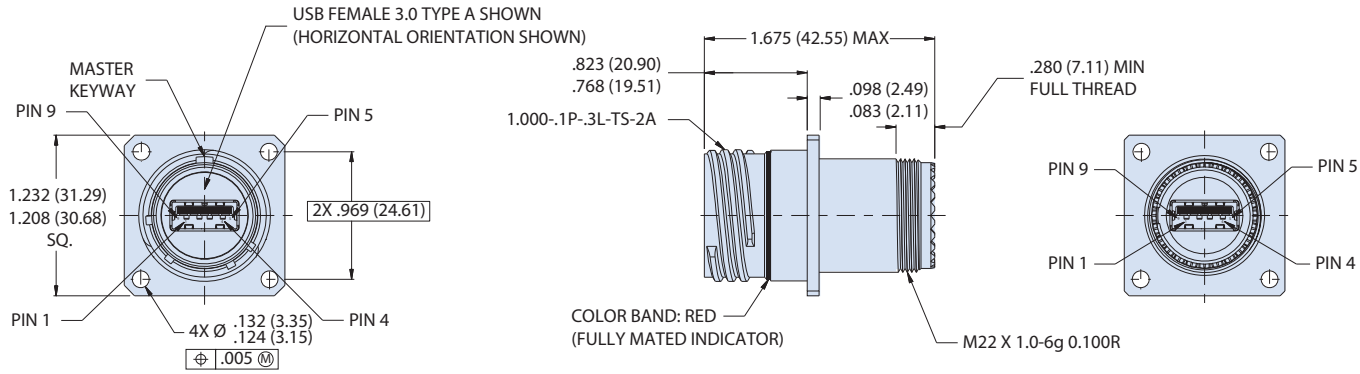

CM - WALL MOUNT RECEPTACLE WITH METRIC CLINCH NUTS

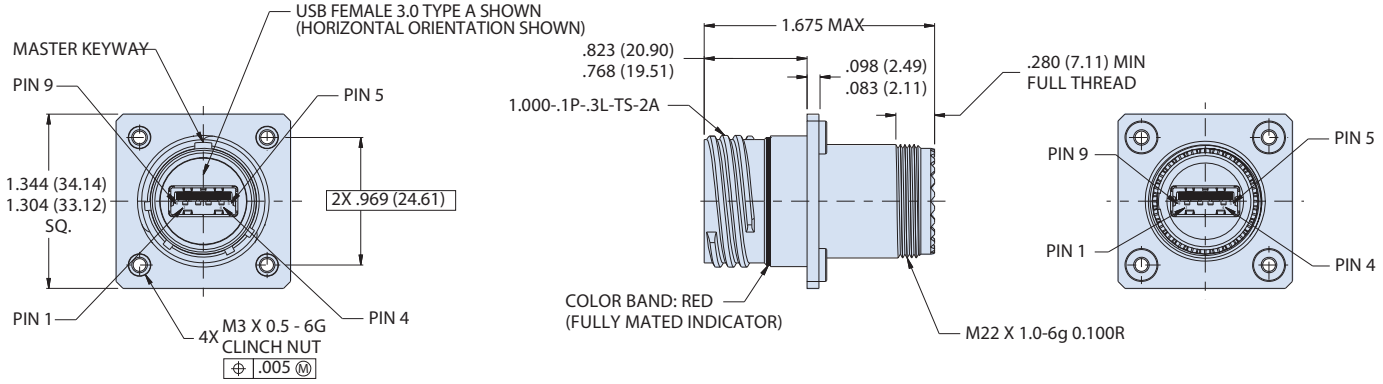

C

© 2016 Glenair, Inc • 1211 Air Way, Glendale, CA 91201 • 818-247-6000 • www.glenair.com • U.S. CAGE code 06324 • SuperSeal™ Catalog
Dimensions in Inches (millimeters) are subject to change without notice.

MIL-DTL-38999 Series III Type Connectors

233-352 Panel mount receptacles with PC tails

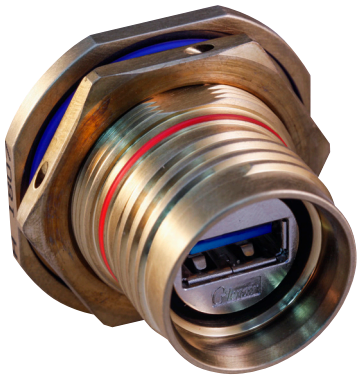

Material and Finish	
NF	Aluminum/Cadmium, Olive Drab
ME	Aluminum/Electroless Nickel
MT	Alumimun/Nickel PTFE
ZR	Aluminum/Black Zinc-Nickel
AB	Marine Bronze
XM	Composite/Electroless Nickel

Additional material / finish options available consult factory

Part Number Development								
Sample Part Number	233-352	NF	00	-15	3	A	N	H
Basic Number	233-352							
Finish	See Material and Finish table							
Connector Style[1]	See Connector Style table							
Shell Size	15							
USB Performance	3 = USB 3.0							
USB Interface (Front and Back)	A = Type A							
Alternate Key Position[1]	A, B, C, D, E, N = Normal per MIL-DTL-38999							
USB Orientation	H = Horizontal V = Vertical							

Connector Style	
07	Rear panel mount, jam nut receptacle
00	Wall mount receptacle with slotted holes
D0	Wall mount receptacle with thru-holes
CM	Wall mount receptacle with metric clinch nuts

All external dimensions, features, etc. compliant with D38999/20, /24, &/26. Consult factory for additional information.

C

07 - JAM-NUT MOUNT RECEPTACLE

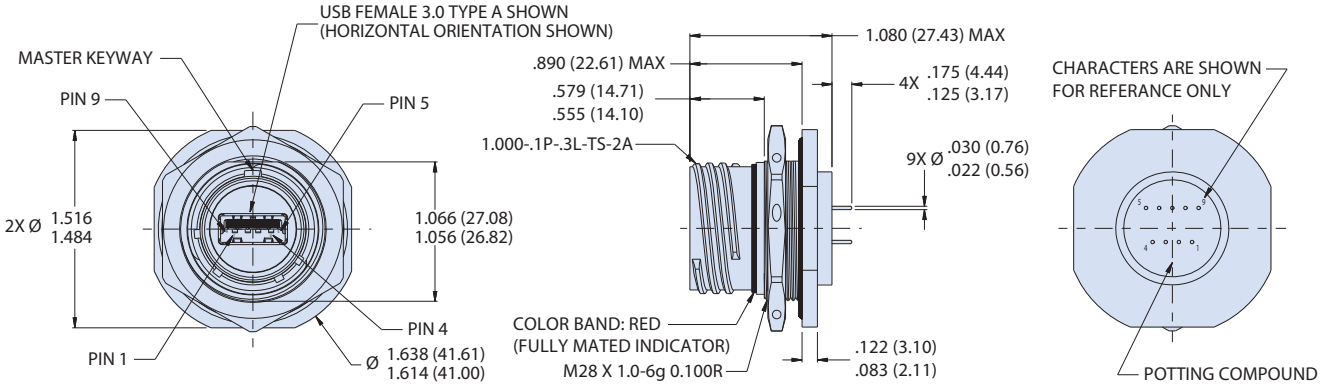

NOTES

1. See Section A for polaziation / panel cutout dimensions
2. Meets IP67 in unmated condition, IP68 mated
3. USB female port, front
4. Material and Finish
   - Shell, jam nut: aluminum alloy
   - Insulators: high grade rigid dielectric/n.a.
   - Contacts: copper alloy, gold plated
   - Seals: silicone based elastomer
   - USB (shell/contacts): copper alloy
   - Dielectric: hi-temp thermoplastic PA9T UL94V-0
   - Hardware: stainless steel /passivated

USB 3.0 Wiring		
Pin	Name	Description
1	(V BUS)	+5 V
2	(D-)	USB 2.0 Data
3	(D+)	
4	(GND)	Ground
5	(RX-)	Receiver
6	(RX+)	Receiver
7	(GND)	Ground
8	(TX-)	Transmitter
9	(TX+)	Transmitter

Solder Cup Positions

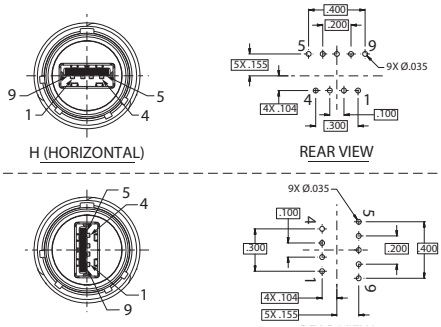

© 2016 Glenair, Inc • 1211 Air Way, Glendale, CA 91201 • 818-247-6000 • www.glenair.com • U.S. CAGE code 06324 • SuperSeal™ Catalog
Dimensions in Inches (millimeters) are subject to change without notice.

00 - WALL MOUNT RECEPTACLE WITH SLOTTED THRU-HOLES

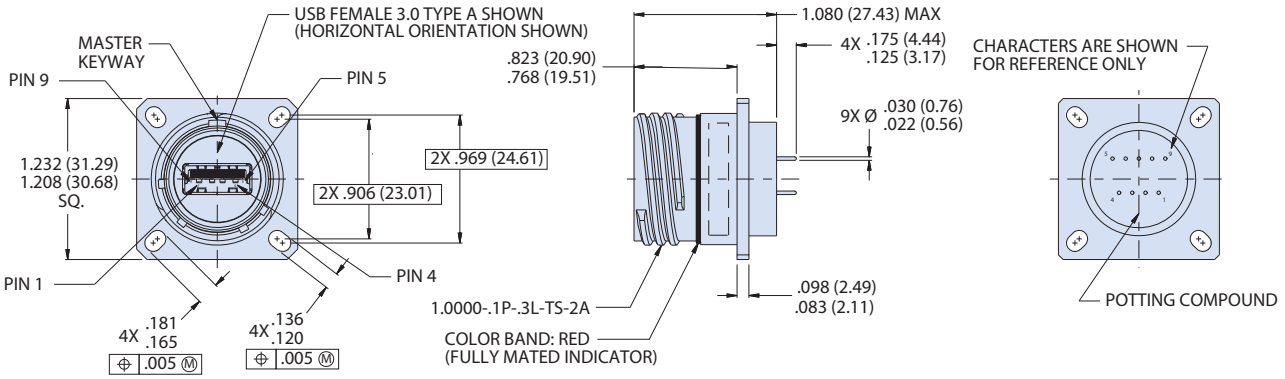

DO - WALL MOUNT RECEPTACLE WITH ROUND THRU-HOLES

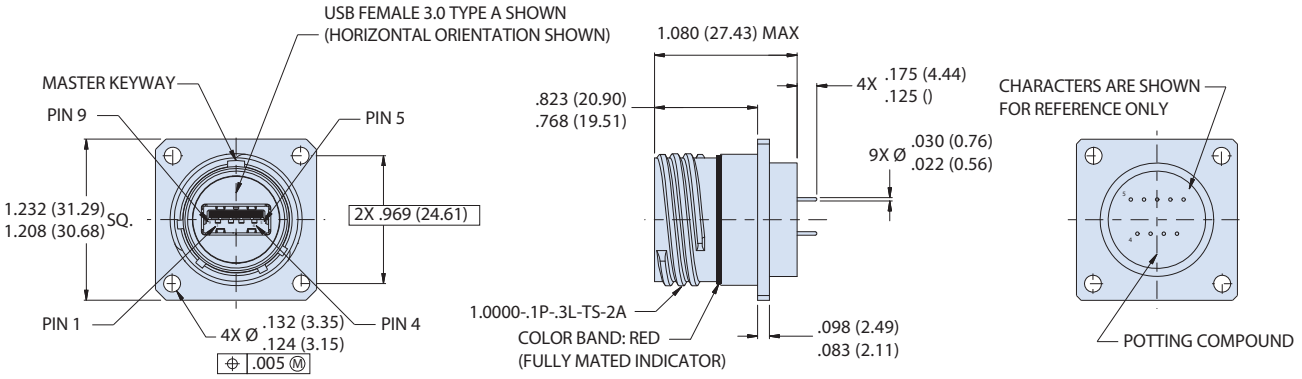

CM - WALL MOUNT RECEPTACLE WITH METRIC CLINCH NUTS

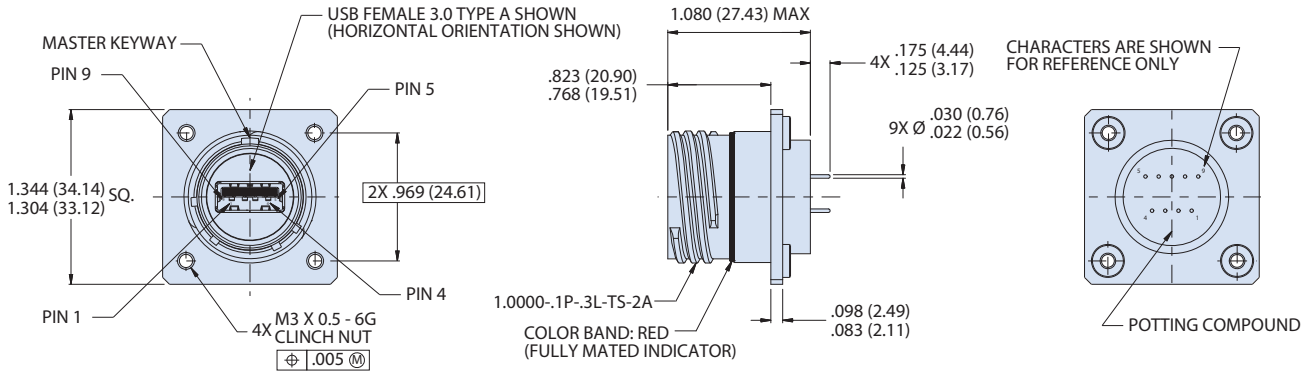

© 2016 Glenair, Inc • 1211 Air Way, Glendale, CA 91201 • 818-247-6000 • www.glenair.com • U.S. CAGE code 06324 • SuperSeal™ Catalog
Dimensions in Inches (millimeters) are subject to change without notice.

MIL-DTL-38999 Series III Type Connectors

233-357 Panel mount receptacles with PC tails and threaded stand-offs

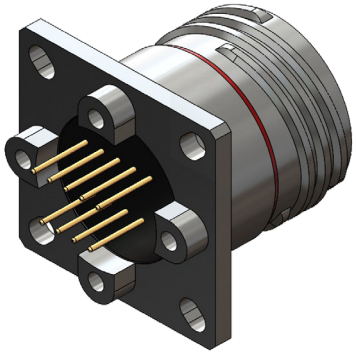

Part Number Development								
Sample Part Number	**233-357**	**NF**	**00**	**-15**	**3**	**A**	**N**	**H**
Basic Number	**233-357**							
Finish	See Material and Finish table							
Connector Style[1]	See Connector Style table							
Shell Size	**15**							
USB Performance	**3** = USB 3.0							
USB Interface (Front and Back)	**A** = Type A							
Alternate Key Position[1]	**A, B, C, D, E, N** = Normal per MIL-DTL-38999							
USB Orientation	**H** = Horizontal **V** = Vertical							

Material and Finish	
NF	Aluminum/Cadmium, Olive Drab
ME	Aluminum/Electroless Nickel
MT	Alumimun/Nickel PTFE
ZR	Aluminum/Black Zinc-Nickel
AB	Marine Bronze
XM	Composite/Electroless Nickel

Additional material / finish options available consult factory

Connector Style	
07	Rear panel mount, jam nut receptacle
00	Wall mount receptacle with slotted holes
D0	Wall mount receptacle with thru-holes
CM	Wall mount receptacle with metric clinch nuts

All external dimensions, features, etc. compliant with D38999/20, /24, &/26. Consult factory for additional information.

C

07 - JAM-NUT MOUNT RECEPTACLE

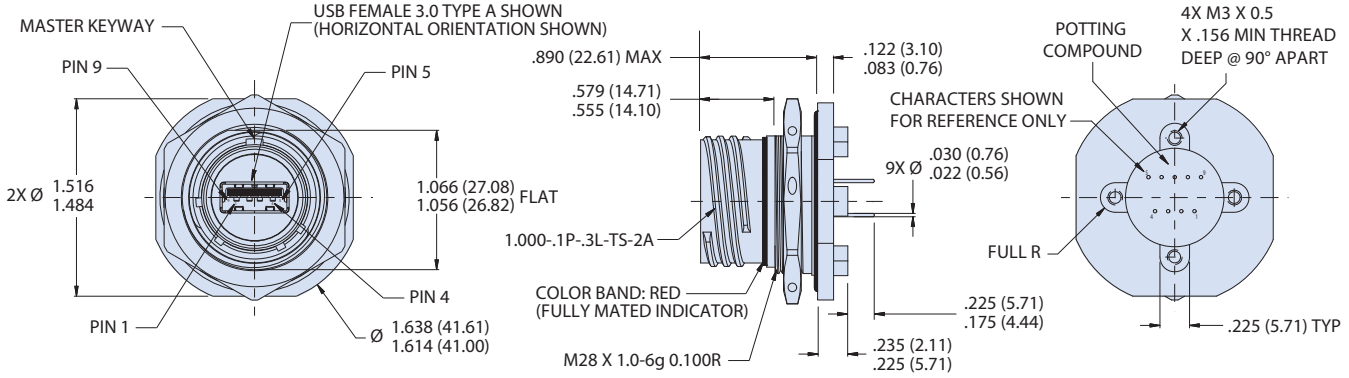

NOTES

1. See Section A for polaziation / panel cutout dimensions
2. Meets IP67 in unmated condition, IP68 mated
3. USB female port, front
4. Material and Finish
   - Shell, jam nut: aluminum alloy
   - Insulators: high grade rigid dielectric/n.a.
   - Contacts: copper alloy, gold plated
   - Seals: silicone based elastomer
   - USB (shell/contacts): copper alloy
   - Dielectric: hi-temp thermoplastic PA9T UL94V-0
   - Hardware: stainless steel /passivated

Solder Cup Positions

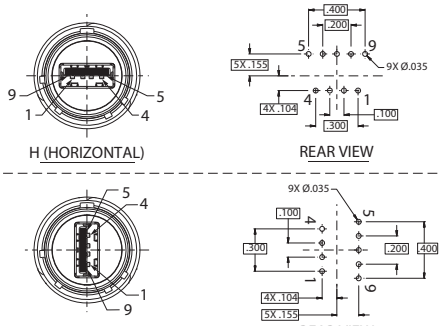

© 2016 Glenair, Inc • 1211 Air Way, Glendale, CA 91201 • 818-247-6000 • www.glenair.com • U.S. CAGE code 06324 • SuperSeal™ Catalog
Dimensions in Inches (millimeters) are subject to change without notice.

233-357 Panel mount receptacles with PC tails and threaded stand-offs

00 - WALL MOUNT RECEPTACLE WITH SLOTTED THRU-HOLES

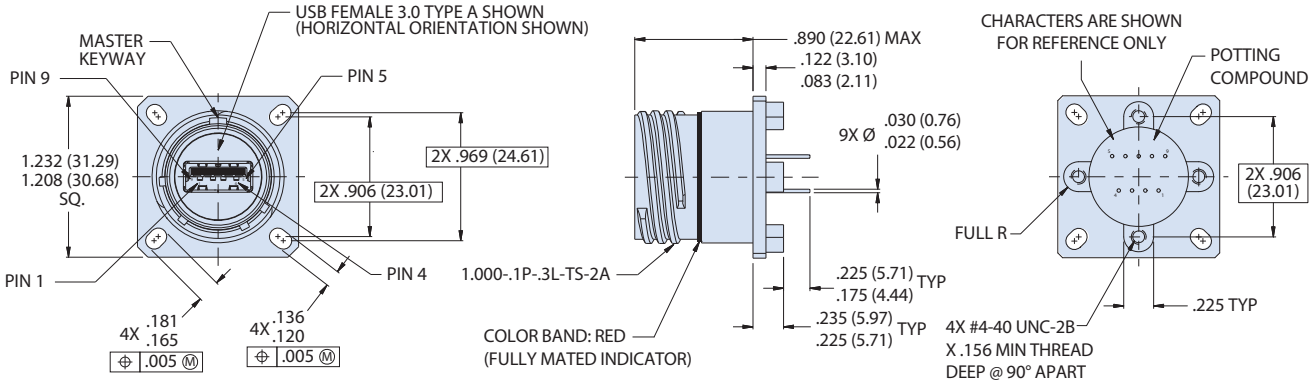

DO - WALL MOUNT RECEPTACLE WITH ROUND THRU-HOLES

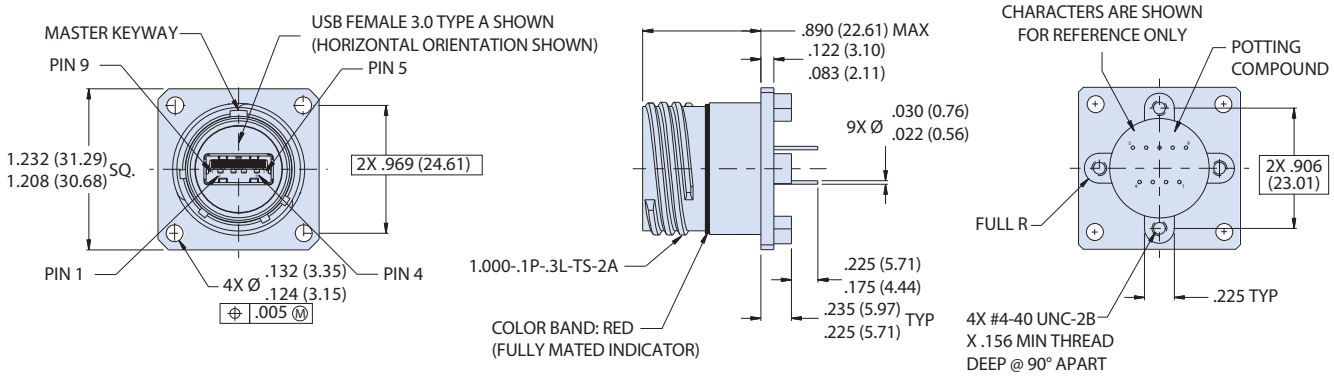

CM - WALL MOUNT RECEPTACLE WITH METRIC CLINCH NUTS

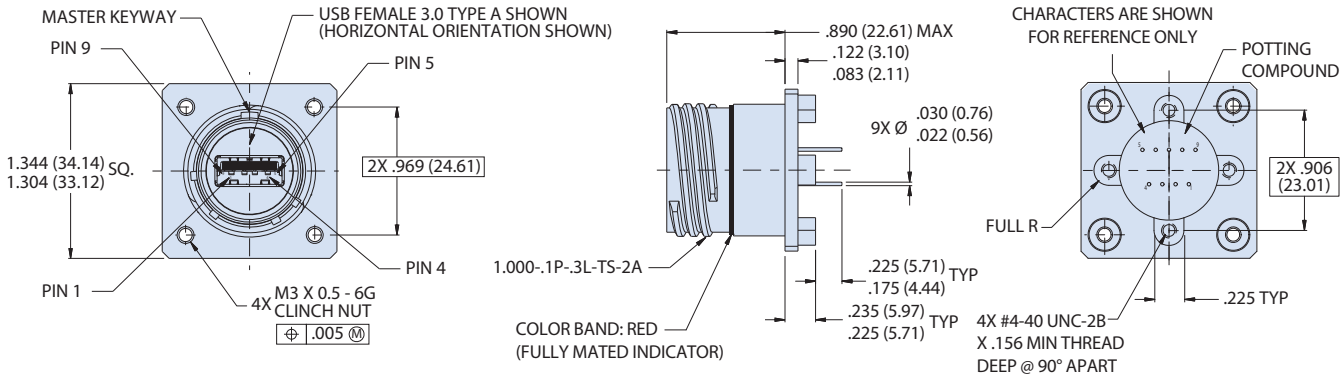

C

© 2016 Glenair, Inc • 1211 Air Way, Glendale, CA 91201 • 818-247-6000 • www.glenair.com • U.S. CAGE code 06324 • SuperSeal™ Catalog
Dimensions in Inches (millimeters) are subject to change without notice.

MIL-DTL-38999 Series III Type Connectors

233-353 Panel mount receptacles with solder cups

RJ45/USB SUPER SEAL™



Part Number Development								
Sample Part Number	**233-353**	**NF**	**00**	**-15**	**3**	**A**	**N**	**H**
Basic Number	**233-353**							
Finish	See Material and Finish table							
Connector Style[1]	See Connector Style table							
Shell Size	**15**							
USB Performance	**3** = USB 3.0							
USB Interface (Front and Back)	**A** = Type A							
Alternate Key Position[1]	**A, B, C, D, E, N** = Normal per MIL-DTL-38999							
USB Orientation	**H** = Horizontal **V** = Vertical							

USB Receptacle Orientation Options

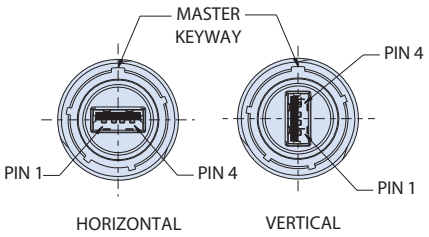

Material and Finish	
NF	Aluminum/Cadmium, Olive Drab
ME	Aluminum/Electroless Nickel
MT	Alumimun/Nickel PTFE
ZR	Aluminum/Black Zinc-Nickel
AB	Marine Bronze
XM	Composite/Electroless Nickel

Additional material / finish options available consult factory

Connector Style	
07	Rear panel mount, jam nut receptacle
00	Wall mount receptacle with slotted holes
D0	Wall mount receptacle with thru-holes
CM	Wall mount receptacle with metric clinch nuts

C

07 - JAM-NUT MOUNT RECEPTACLE

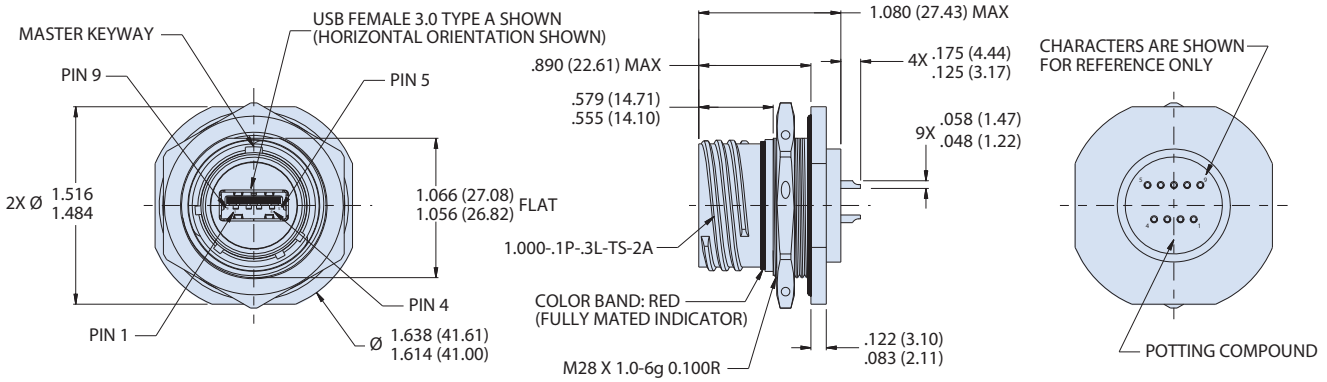

NOTES

1. See Section A for alternate key/keyway positions and panel cutout dimensions
2. Meets IP67 in unmated condition, IP68 mated
3. USB female port, front
4. Rear panel mount only
5. Material and Finish
   - Shell, jam nut: al alloy
   - Insulators: high grade rigid dielectric/n.a.
   - Contacts: copper alloy, gold plated
   - Seals: silicone based elastomer
   - USB (shell/contacts): copper alloy
   - Dielectric: hi-temp thermoplastic PA9T UL94V-0
   - Hardware: stainless steel /passivated

All external dimensions, features, etc. compliant with D38999/20, /24, &/26. Consult factory for additional information.

USB 3.0 Wiring		
Pin	**Name**	**Description**
1	(V BUS)	+5 V
2	(D-)	USB 2.0 Data
3	(D+)	
4	(GND)	Ground
5	(RX-)	Receiver
6	(RX+)	Receiver
7	(GND)	Ground
8	(TX-)	Transmitter
9	(TX+)	Transmitter

© 2016 Glenair, Inc • 1211 Air Way, Glendale, CA 91201 • 818-247-6000 • www.glenair.com • U.S. CAGE code 06324 • SuperSeal™ Catalog
Dimensions in Inches (millimeters) are subject to change without notice.

233-353 Panel mount receptacles with solder cups

00 - WALL MOUNT RECEPTACLE WITH SLOTTED THRU-HOLES

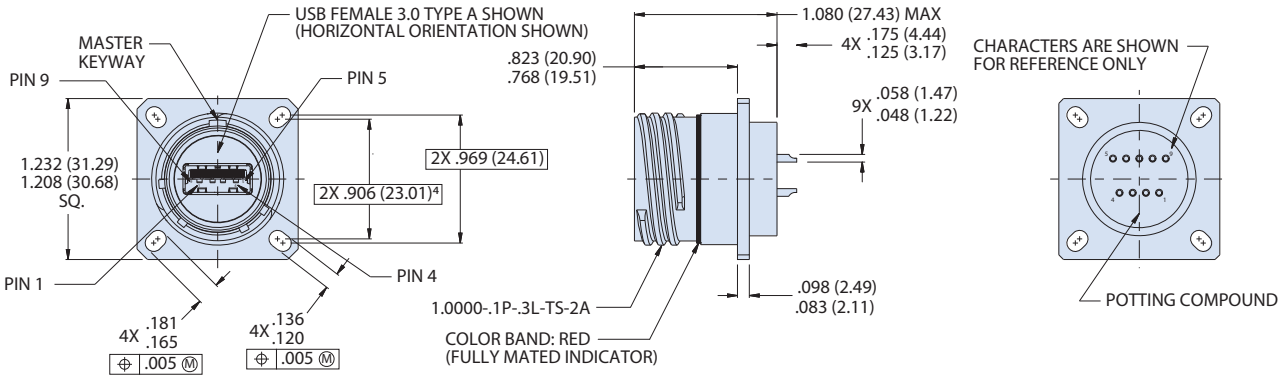

DO - WALL MOUNT RECEPTACLE WITH ROUND THRU-HOLES

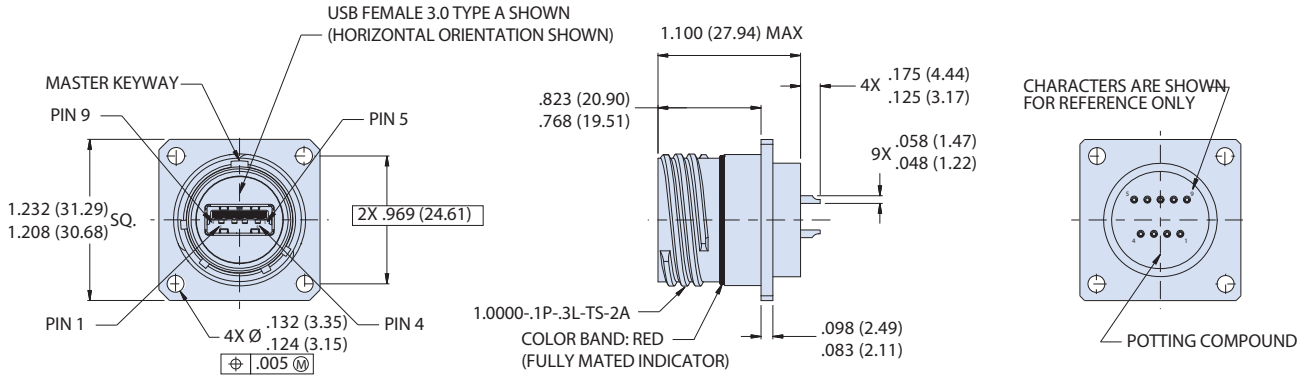

CM - WALL MOUNT RECEPTACLE WITH METRIC CLINCH NUTS

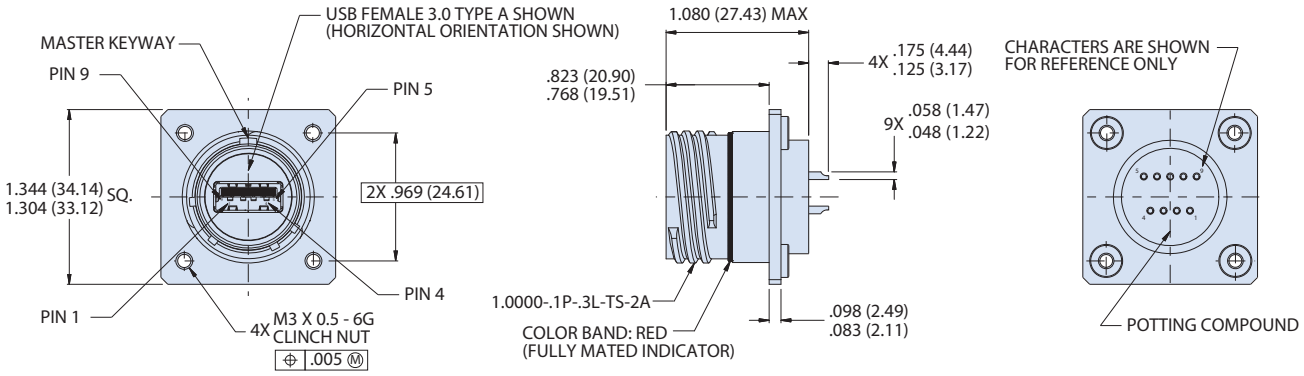

C

© 2016 Glenair, Inc • 1211 Air Way, Glendale, CA 91201 • 818-247-6000 • www.glenair.com • U.S. CAGE code 06324 • SuperSeal™ Catalog
Dimensions in Inches (millimeters) are subject to change without notice.

MIL-DTL-38999 Series III Type Connectors

233-354 Panel mount receptacles with breakout board

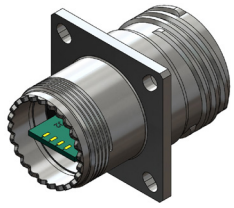

USB Receptacle Orientation Options

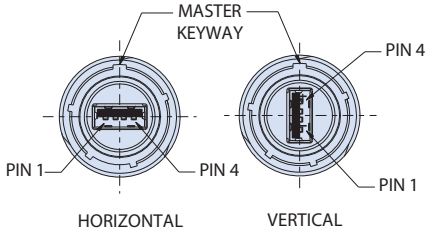

Material and Finish	
NF	Aluminum/Cadmium, Olive Drab
M	Aluminum/Electroless Nickel
MT	Alumimun/Nickel PTFE
ZR	Aluminum/Black Zinc-Nickel

Part Number Development								
Sample Part Number	**233-354**	**NF**	**00**	**-15**	**3**	**A**	**N**	**H**
Basic Number	**233-354**							
Finish	See Material and Finish table							
Connector Style[1]	See Connector Style table							
Shell Size	**15**							
USB Performance	**3** = USB 3.0							
USB Interface (Front and Back)	**A** = Type A							
Alternate Key Position[1]	**A, B, C, D, E, N** = Normal per MIL-DTL-38999							
USB Orientation	**H** = Horizontal **V** = Vertical							

Material and Finish	
NF	Aluminum/Cadmium, Olive Drab
ME	Aluminum/Electroless Nickel
MT	Alumimun/Nickel PTFE
ZR	Aluminum/Black Zinc-Nickel
AB	Marine Bronze
XM	Composite/Electroless Nickel

Additional material / finish options available consult factory

All external dimensions, features, etc. compliant with D38999/20, /24, &/26. Consult factory for additional information.

C

07 - JAM-NUT MOUNT RECEPTACLE

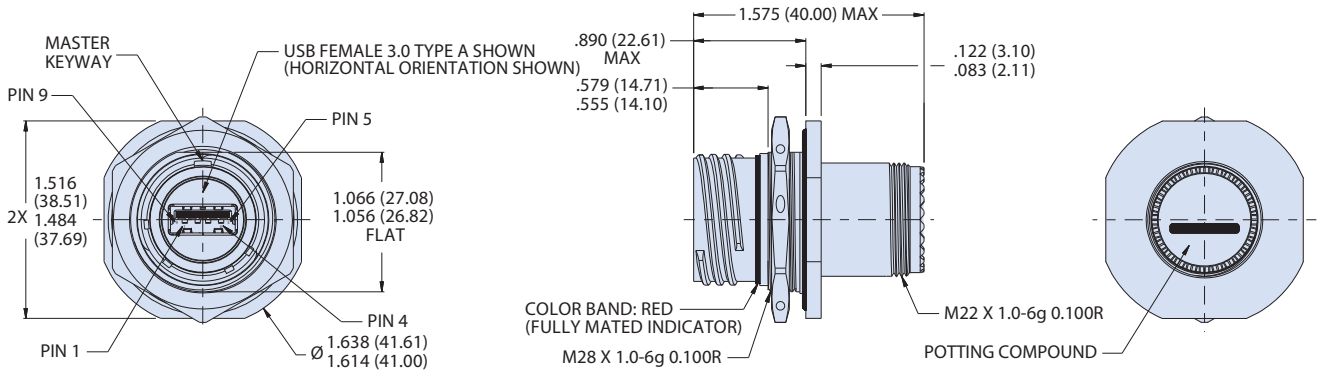

NOTES

1. See Section A for alternate key/keyway positions and panel cutout dimensions
2. Meets IP67 in unmated condition, IP68 mated
3. USB female port, front
4. Material and Finish
   - Shell, jam nut: al alloy
   - Insulators: high grade rigid dielectric/n.a.
   - Contacts: copper alloy, gold plated
   - Seals: silicone based elastomer
   - USB (shell/contacts): copper alloy
   - Dielectric: hi-temp thermoplastic PA9T UL94V-0
   - Hardware: stainless steel / passivated

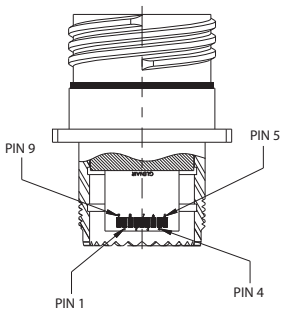

USB 3.0 Wiring		
Pin	**Name**	**Description**
1	(V BUS)	+5 V
2	(D-)	USB 2.0 Data
3	(D+)	
4	(GND)	Ground
5	(RX-)	Receiver
6	(RX+)	Receiver
7	(GND)	Ground
8	(TX-)	Transmitter
9	(TX+)	Transmitter

© 2016 Glenair, Inc • 1211 Air Way, Glendale, CA 91201 • 818-247-6000 • www.glenair.com • U.S. CAGE code 06324 • SuperSeal™ Catalog
Dimensions in Inches (millimeters) are subject to change without notice.

00 - WALL MOUNT RECEPTACLE WITH SLOTTED THRU-HOLES

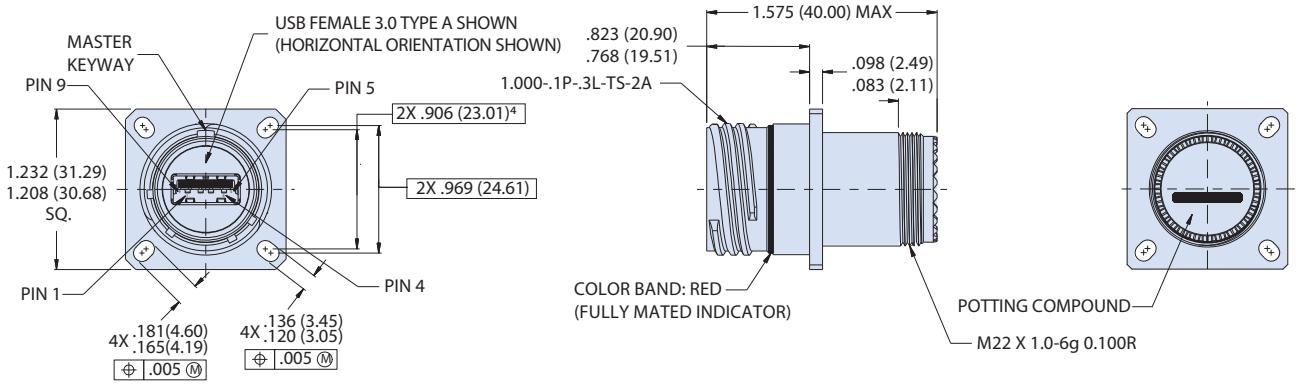

DO - WALL MOUNT RECEPTACLE WITH ROUND THRU-HOLES

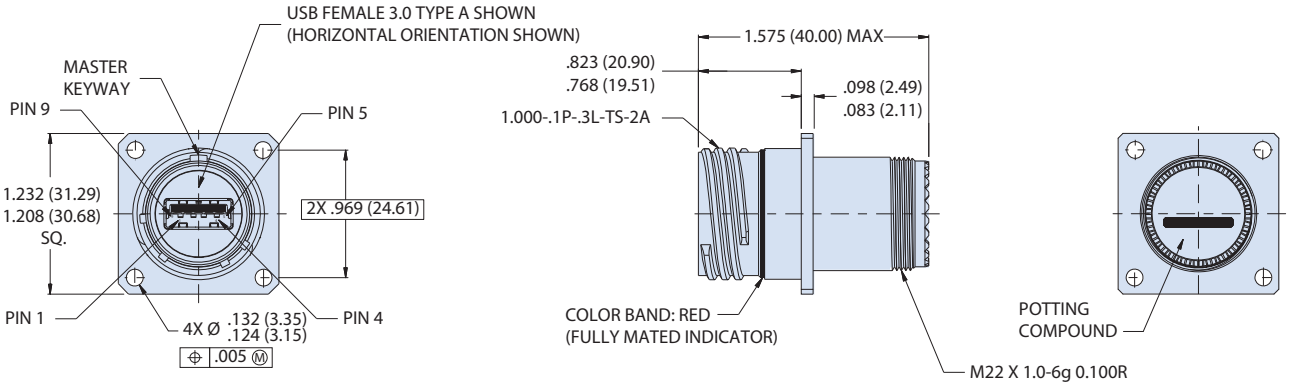

CM - WALL MOUNT RECEPTACLE WITH METRIC CLINCH NUTS

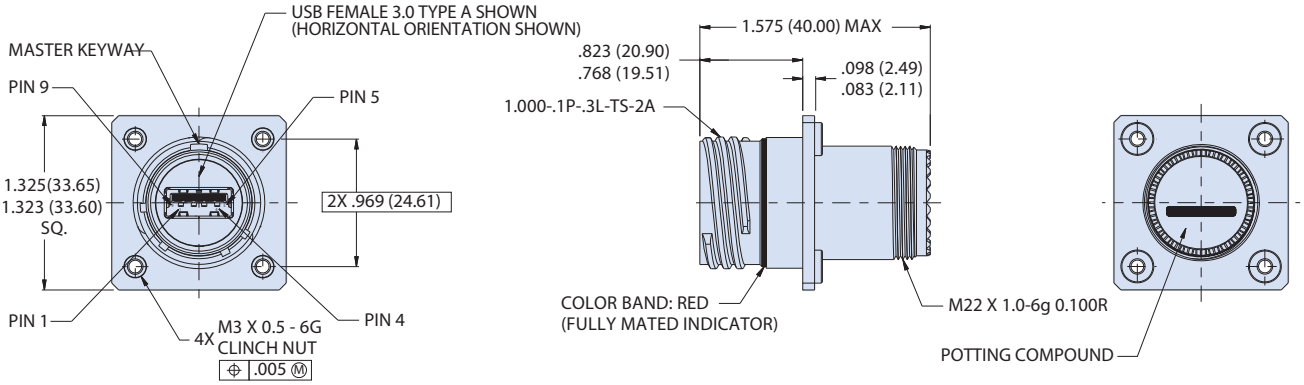

MIL-DTL-38999 Series III Type Connectors

233-355 Panel mount feed-through connectors



Part Number Development								
Sample Part Number	**233-355**	**NF**	**00**	**-15**	**3**	**A**	**N**	**H**
Basic Number	**233-355**							
Finish	**See** Material and Finish table							
Connector Style[1]	**See** Connector Style table							
Shell Size	**15**							
USB Performance	**3** = USB 3.0							
USB Interface (Front and Back)	**A** = Type A							
Alternate Key Position[1]	**A, B, C, D, E, N** = Normal per MIL-DTL-38999							
USB Orientation	**H** = Horizontal **V** = Vertical							

Material and Finish	
NF	Aluminum/Cadmium, Olive Drab
ME	Aluminum/Electroless Nickel
MT	Alumimun/Nickel PTFE
ZR	Aluminum/Black Zinc-Nickel

Connector Style	
07	Rear panel mount, jam nut receptacle
00	Wall mount receptacle with slotted holes
D0	Wall mount receptacle with thru-holes
CM	Wall mount receptacle with metric clinch nuts

All external dimensions, features, etc. compliant with D38999/20, /24, &/26. Consult factory for additional information.

C

07 - JAM-NUT MOUNT RECEPTACLE

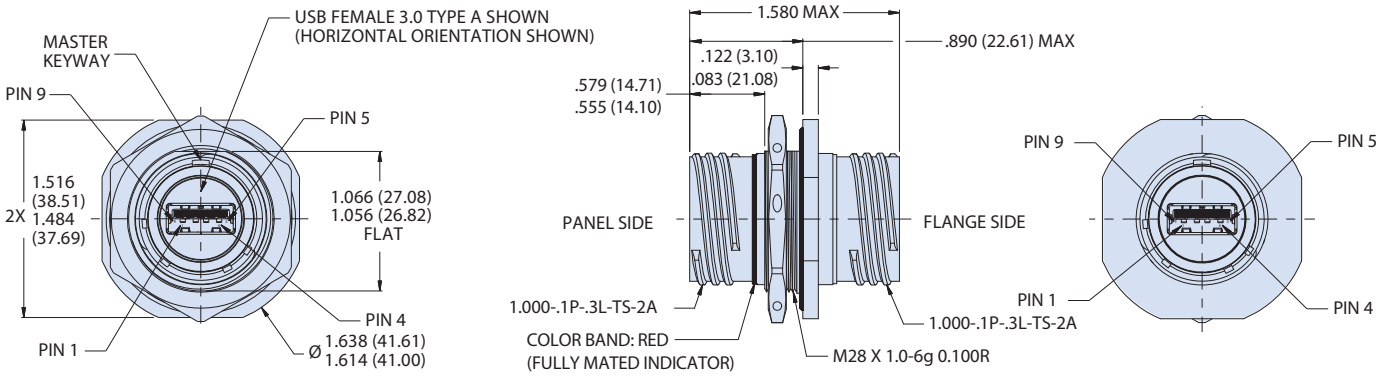

NOTES

1. See Section A for alternate key/keyway positions and panel cutout dimensions
2. Meets IP67 in unmated condition, IP68 mated
3. USB female port, front
4. Material and Finish
   - Shell, jam nut: al alloy
   - Insulators: high grade rigid dielectric/n.a.
   - Contacts: copper alloy, gold plated
   - Seals: silicone based elastomer
   - USB (shell/contacts): copper alloy
   - Dielectric: hi-temp thermoplastic PA9T UL94V-0
   - Hardware: stainless steel /passivated

USB Receptacle Orientation Options

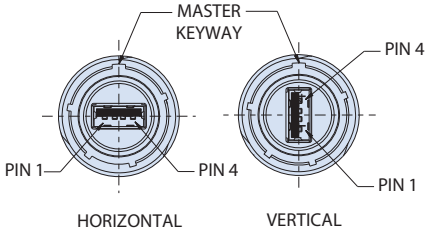

© 2016 Glenair, Inc • 1211 Air Way, Glendale, CA 91201 • 818-247-6000 • www.glenair.com • U.S. CAGE code 06324 • SuperSeal™ Catalog
Dimensions in Inches (millimeters) are subject to change without notice.

REV. 12.21.23

00 - WALL MOUNT RECEPTACLE WITH SLOTTED THRU-HOLES

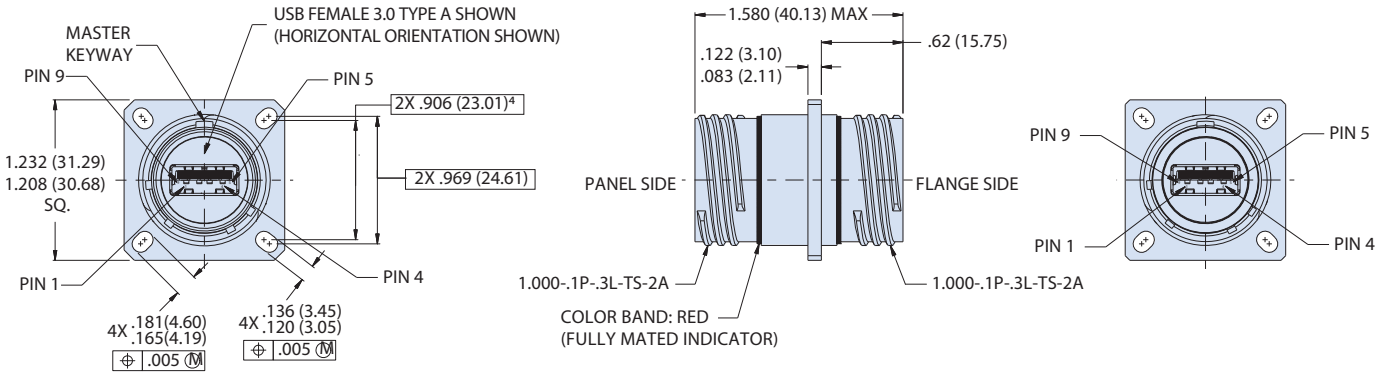

DO - WALL MOUNT RECEPTACLE WITH ROUND THRU-HOLES

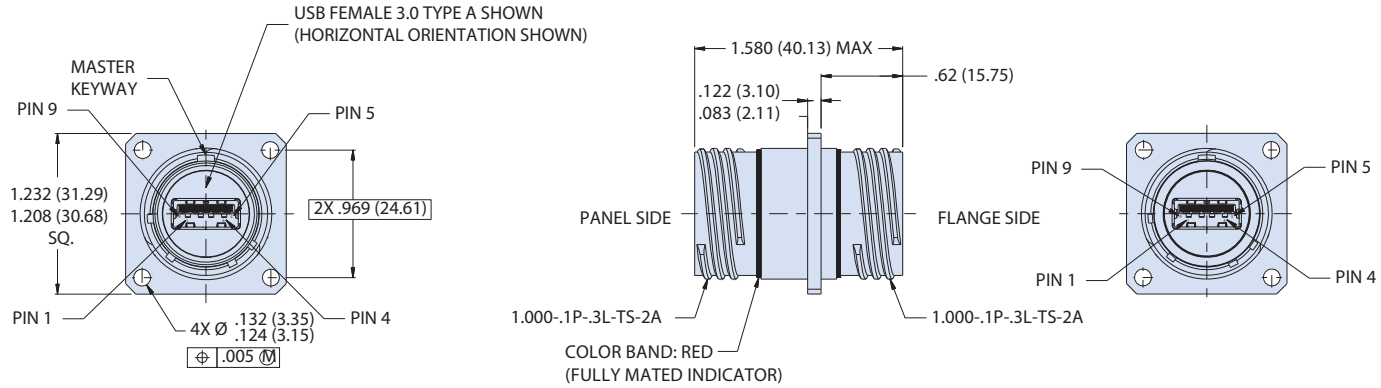

CM - WALL MOUNT RECEPTACLE WITH METRIC CLINCH NUTS

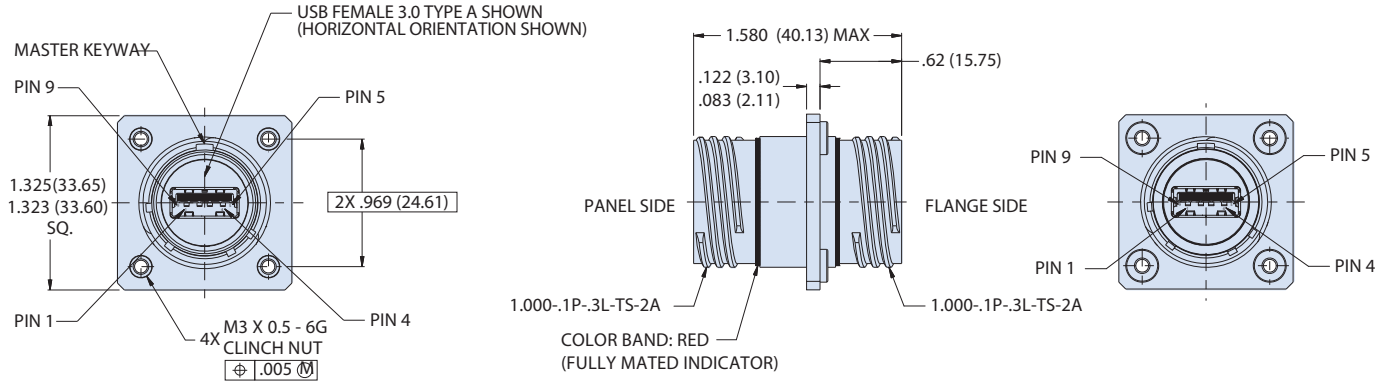

© 2016 Glenair, Inc • 1211 Air Way, Glendale, CA 91201 • 818-247-6000 • www.glenair.com • U.S. CAGE code 06324 • SuperSeal™ Catalog
Dimensions in Inches (millimeters) are subject to change without notice.

MIL-DTL-38999 Series III Type Connectors

233-358 Plug USB cord adapter



Part Number Development						
Sample Part Number	**233-358**	**NF**	**G6**	**-15**	**N**	**H**
Basic Number	**233-358**					
Finish	**See** Material and Finish table					
Connector Style[1]	**G6** = plug					
Shell Size	**15**					
Alternate Key Position[1]	**A**, **B**, **C**, **D**, **E**, **N** = Normal per MIL-DTL-38999					
USB Orientation	**H** = Horizontal **V** = Vertical					

Material and Finish	
NF	Aluminum/Cadmium, Olive Drab
ME	Aluminum/Electroless Nickel
MT	Alumimun/Nickel PTFE
ZR	Aluminum/Black Zinc-Nickel

All external dimensions, features, etc. compliant with D38999/20, /24, &/26. Consult factory for additional information.

C

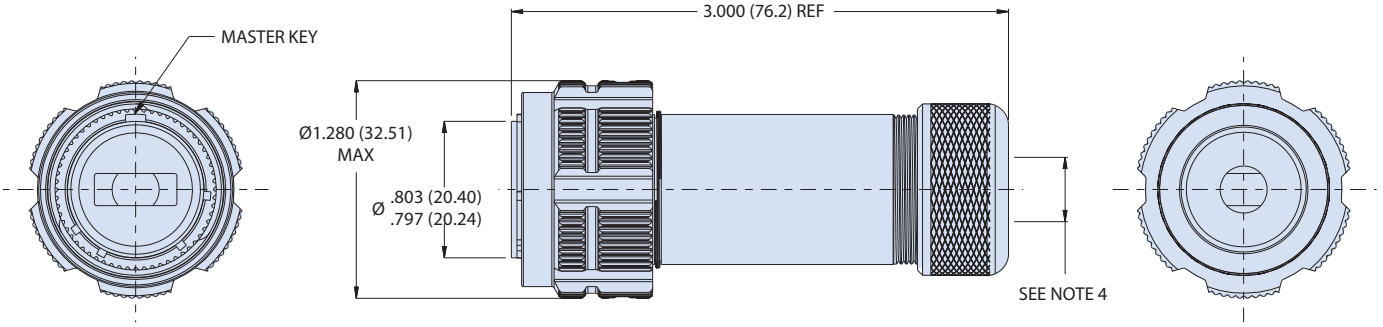

NOTES

1. See Section A for polaziation / panel cutout dimensions
2. Meets IP68 in mated condition, IP68 mated condition
3. Accommodates USB 3.0 patch cords with Type A plug interface
4. Accomodates cable outside diameter 0.118 (2.997) to 0.243 (6.172)
5. USB female port, front
6. Material and Finish
   - Shell, coupling nut: aluminum alloy (composite coupling nut no plating required)
   - Insulators: high grade rigid dielectric/n.a.
   - Seals: silicone based elastomer
   - USB adapter housing: UL94V-0 compliant ABS or PPS
   - Hardware: stainless steel /passivated

RECOMMENDED USB TYPE A PLUG DESIGN

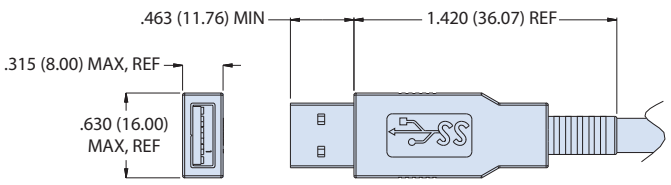

© 2016 Glenair, Inc • 1211 Air Way, Glendale, CA 91201 • 818-247-6000 • www.glenair.com • U.S. CAGE code 06324 • SuperSeal™ Catalog

Dimensions in Inches (millimeters) are subject to change without notice.



2330-0445 Glenair SuperSeal™ USB 3.0 cable jumpers, with SuperNine® connectors to standard USB Type A plug

SuperSeal USB connectors are IP67 open face rated and IP68 in the mated condition for complete protection in harsh environments. SuperSeal connector styles include plug, wall mount and jam-nut receptacles. USB 3.0 can be ordered in horizontal or vertical orientation to provide further security against mis-mating and conform to existing USB orientations. Please consult factory for custom configurations.

All external dimensions, features, etc. compliant with D38999/20, /24, &/26. Consult factory for additional information.

Material and Finish	
NF	Aluminum/cadmium, olive drab
ME	Aluminum/electroless nickel
ZR	Zinc nickel, black (tri-valent chromium) RoHS compliant

Connector Style	
G6	Plug
07	Rear panel mount, jam nut receptacle
00	Wall mount receptacle with slotted holes[2]

Part Number Development									
Sample Part Number	**2330-0445**	**NF**	**07**	**-15**	**3**	**A**	**N**	**H**	**-03**
Basic Number	**2330-0445**								
P1 Finish	See Material and Finish table								
P1 Connector Style[1]	See Connector Style table								
P1 Shell Size	**15**								
USB Performance	**3** = USB 3.0								
USB Interface	**A** = Type A								
Polarization	**N** = Normal								
USB Orientation	**H** = Horizontal **V** = Vertical								
Overall Length	**01**, **02**, **03**, **06** and **10** feet in length. For lengths longer than 10 feet use 2330-0450 repeaters for optimal performance								

NOTES

1. See Section A for panel cutout dimensions
2. Meets IP67 in unmated condition, IP68 mated
3. USB 3.0 Specifications
   DWV: 100 VAC (RMS)
   IR: 100 Megohms minimum
   Operating Temperature: 20°C to +85°C
4. Standard configurations provided with adhesive lined shrink boot
5. SuperSeal plug houses USB plug. Superseal receptacle houses USB receptacle

USB Receptacle Orientation Options (Partial Views Shown)

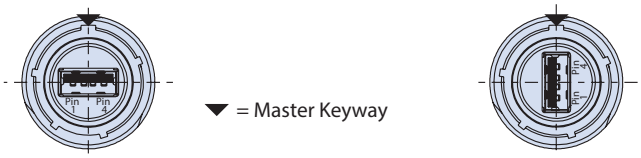

Horizontal Vertical

C

2330-0445 USB 3.0 Cable assembly

AVAILABLE P 1 CONNECTOR DIMENSIONS, SHELL SIZE 15

G6 Plug

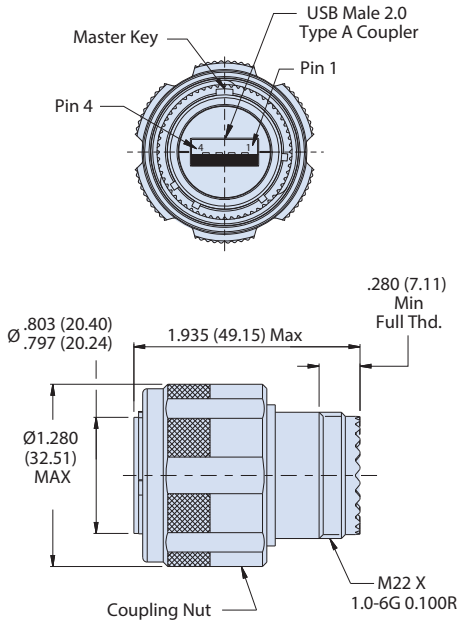

07 Receptacle, Jam-Nut Mount

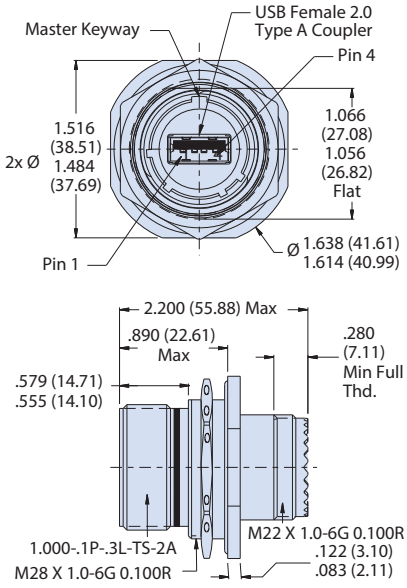

00 Receptacle, Wall Mount

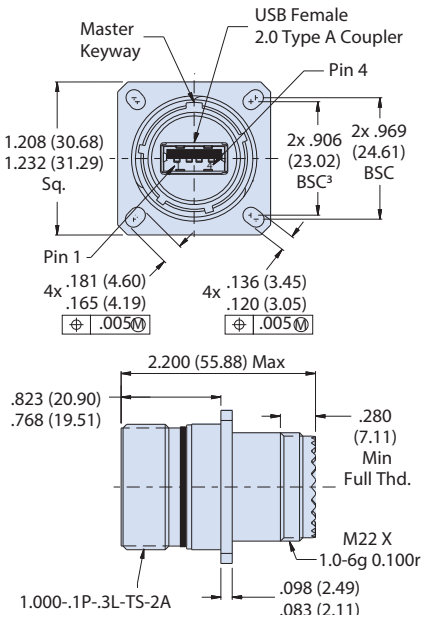

CABLE ASSEMBLY SHOWN WITH PLUG CONNECTOR STYLE

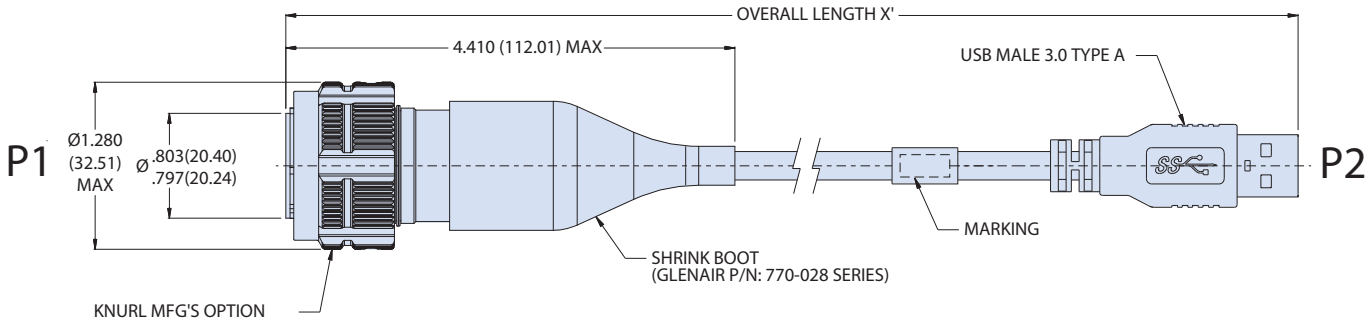

C

© 2016 Glenair, Inc • 1211 Air Way, Glendale, CA 91201 • 818-247-6000 • www.glenair.com • U.S. CAGE code 06324 • SuperSeal™ Catalog
Dimensions in Inches (millimeters) are subject to change without notice.

MIL-DTL-38999 Series III Type Connectors

2330-0450 USB 3.0 cable assembly with active repeater



All external dimensions, features, etc. compliant with D38999/20, /24, &/26. Consult factory for additional information.

Material and Finish	
NF	Aluminum/cadmium, olive drab
ME	Aluminum/electroless nickel
ZR	Zinc nickel, black (tri-valent chromium) RoHS compliant

NOTES

1. Meets IP67 in unmated condition, IP68 mated
2. SuperSeal plug houses USB plug.

2330-0450 Glenair SuperSeal™ USB 3.0 plug cable jumper, with active repeater.

SuperSeal USB cable assemblys with IP67 open face rated connectors offer complete protection from environmental debris and water ingress common under harsh environmental conditions. USB 3.0 can be ordered in horizontal or vertical orientation to provide further security against mis-mating and conforms to existing USB orientations. Additional length options and custom configurations available. Please consult factory.

Part Number Development									
Sample Part Number	**2330-0450**	**NF**	**G6**	**-15**	**3**	**A**	**N**	**H**	**-03**
Basic Number	**2330-0450**								
P1 Finish	See Material and Finish table								
P1 Connector Style[1]	**G6** = Plug								
P1 Shell Size	**15**								
USB Performance	**3** = USB 3.0								
USB Interface	**A** = Type A								
Polarization	**A**, **B**, **C**, **D**, **E**, **N** = Normal								
USB Orientation	**H** = Horizontal **V** = Vertical								
Overall Length	**01** thru **10**; length in feet.								

C

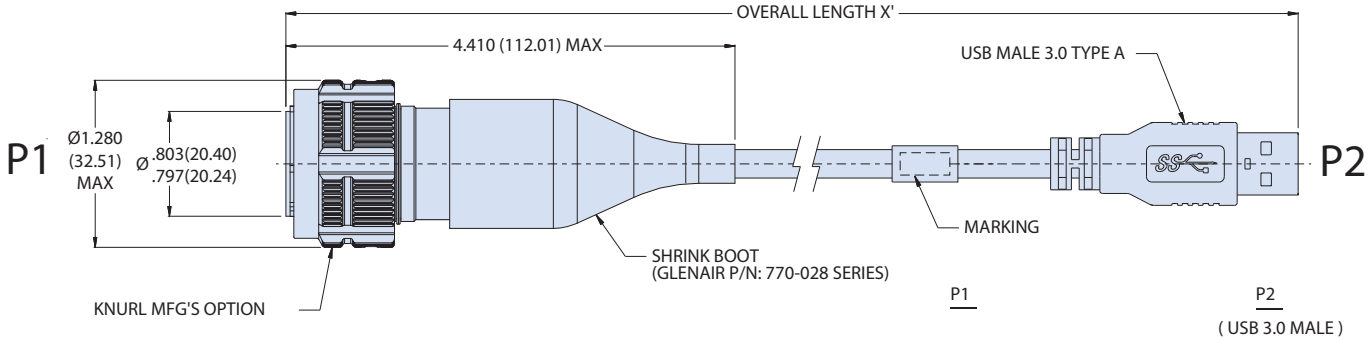

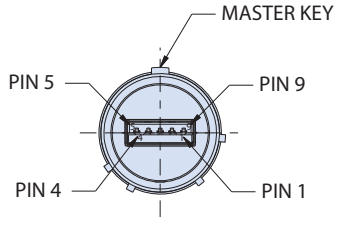

HORIZONTAL

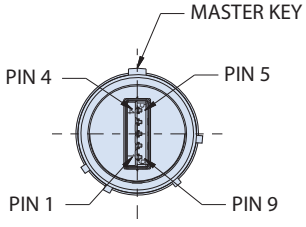

VERTICAL

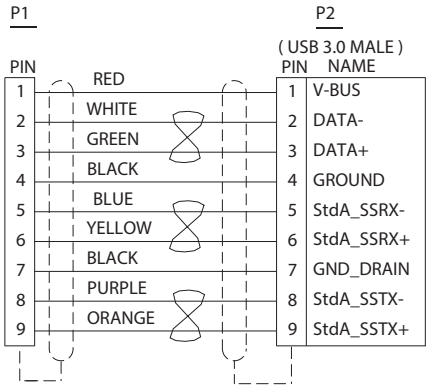

© 2016 Glenair, Inc • 1211 Air Way, Glendale, CA 91201 • 818-247-6000 • www.glenair.com • U.S. CAGE code 06324 • SuperSeal™ Catalog
Dimensions in Inches (millimeters) are subject to change without notice.

MIL-DTL-38999 Series III Type Connectors

233-392 USB 3.0 Memory stick

Part Number Development							
Sample Part Number	**233-392**	**NF**	**32**	**15**	**-N**	**H**	**P**
Series / Basic Part No.	**233-392**						
Material/Finish	**NF** = Aluminum/cadmium olive drab **ME** = Aluminum/electroless nickel **MT** = Aluminum/nickel PTFE **ZR** = Aluminum/zinc-nickel						
Storage Capacity Options	**32** = 32 GB, **64** = 64 GB, **128** = 128 GB, **256** = 256 GB						
Shell Size	**15**						
Alternate Polarization	**A**, **B**, **C**, **D**, **E**, **N** = Normal; Per MIL-DTL-38999						
USB Orientation	**H** = Horizontal **V** = Vertical						
Protective Cover Option	**P** = Series 660-023 cover; Omit for none						

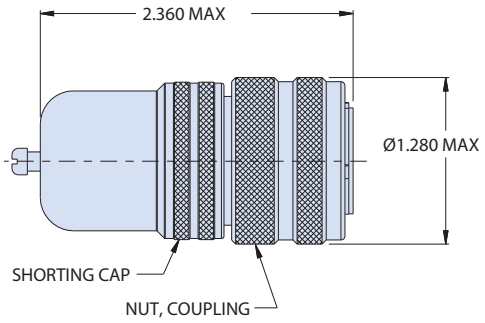

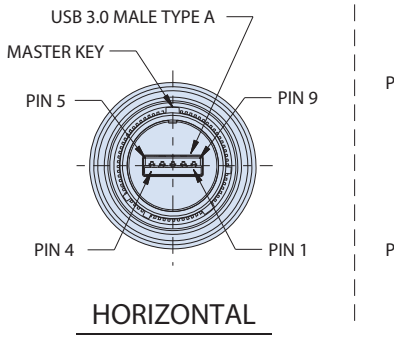

HORIZONTAL

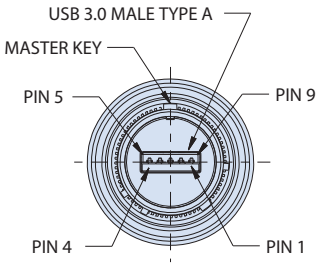

HORIZONTAL

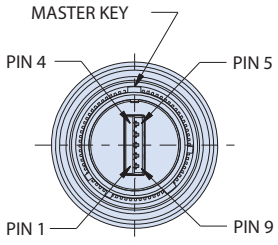

VERTICAL

Table II		
Read / Write Performance		
Capacity	Read (Mb/S)	Write (Mb/S)
32 GB	190	45
64 GB	190	95
128 GB	195	95
256 GB	180	130

NOTES

1. Contact factory for details of protective cover options.
2. This connector is designed to mate with Glenair part numbers 233-350,-352,-353,-354 &-355.
3. USB flash memory specifications:
   - Storage capacity - 32 GB, 64 GB, 128 GB, 256 GB (consult factory for other capacity options)
   - System requirements - windows 2000, xp, vista, windows 7.
   - Compatibility - plug and play; USB 3.0 compliance; backward compatible with USB 2.0.
   - Interface - USB 3.0, Type a male.
   - Data transfer rates - see table II
   - Password protection and AES encryption.
   - Environmental parameters:
     - » Operating temperatures - -40°c to 85°c
     - » Storage temperatures - -40°c to 85°c
     - » Humidity range operating - 10% to 95%.
4. Material/finishes:
   - Barrel, coupling nut - see part number development
   - Insulators-high grade rigid dielectric/N.A.
   - Seal: fluorosilicone/N.A.
   - EMI grounding spring-BeCu/ electroless nickel plate.
   - Hardware: stainless steel/ passivated
5. Assembly shall be identified with Glenair's name, part number and date code, space permitting.
6. Interpret drawing per ASME Y14.5 - 2009.

C

© 2016 Glenair, Inc • 1211 Air Way, Glendale, CA 91201 • 818-247-6000 • www.glenair.com • U.S. CAGE code 06324 • SuperSeal™ Catalog
Dimensions in Inches (millimeters) are subject to change without notice.

Rev. 02/16/22



C

SERIES 23

SuperSeal™

Ruggedized USB 3.2 Gen 2 Type C connectors



38999 Type SuperSeal™ ruggedized connectors offer outstanding environmental sealing and metal-to-metal shell grounding performance for commercial USB 3.2 Gen 2 Type C interfaces in a standard 38999 type package. Connectors are IP68 rated when mated and IP67 rated in the unmated condition for complete system protection against water sand and dust. These rugged field connectors offer military-grade harsh-environment protection for the SuperSpeed 10Gb/s and fast charging that USB 3.2 provides. The Type C interface allows smaller shell sizes to be utilized for lighter weight systems and panel real estate savings. 38999 Type SuperSeal™ USB 3.2 connectors feature polarized keys to prevent mismating and non-corrosive, conductive material and finish options. The durable SuperSeal™ insert design provides an enhanced operating temperature range, increased life cycle, and rugged vibration and shock performance. Simple plug-and-play connectivity and hot-swappable addition of external peripherals without restarting systems. Crimp, solder-cup, PC tail and cable assemblies available.

Features:

- **USB 3.2 Gen 2 Type C SuperSpeed 10 Gb/s**
- **Ruggedized D38999 interface with enhanced shielding and grounding**
- **Superior sealing: IP68 mated, IP67 open-face; except 'Drive-Thru' plug**
- **Military-grade vibration and shock performance**
- **Increased operating temperature range compared to commercial-grade USB connectors**

© 2016 Glenair, Inc • 1211 Air Way, Glendale, CA 91201 • 818-247-6000 • www.glenair.com • U.S. CAGE code 06324 • SuperSeal™ Catalog
Dimensions in Inches (millimeters) are subject to change without notice.

Rev. 11.05.21



233-380 C-42

233-380 Receptacle Connector with USB 3.2 Gen 2 (Type C) Female-to-Female Ports



233-382 C-45

233-382 Receptacle Connector with Female USB 3.2 Gen 2 (Type C) Port to PC Tail Termination



233-384 C-48

233-384 Receptacle Connector with Female USB 3.2 Gen 2 (Type C) Port to Breakout Board



233-388 C-51

233-388 'Drive-Thru' Plug provides IP68 sealing in mated condition for standard

New name	Old name	Original name	SuperSpeed name	Max speed	USB TYPE	Product Lines related
USB 3.2 Gen 2x2	N/A	USB 3.2	SuperSpeed USB 20Gbps	20Gbps	C	Versalink
USB 3.2 Gen 2	USB 3.1 Gen 2	USB 3.1	SuperSpeed USB 10Gbps	10Gbps	C	Versalink, 233-380, 233-382, 233-384, 233-388
USB 3.2 Gen 1	USB 3.1 Gen 1	USB 3.0	SuperSpeed USB	5Gbps	A	253-045, 253-044, El-Ochito Blue, Versalink, 233-350, 233-352, 233-354, El-Ochito Mighty Mouse, Speed Master, High Speed Micro-D, Superfly (882-00/010)

© 2016 Glenair, Inc • 1211 Air Way, Glendale, CA 91201 • 818-247-6000 • www.glenair.com • U.S. CAGE code 06324 • SuperSeal™ Catalog
Dimensions in Inches (millimeters) are subject to change without notice.

Rev. 11.05.21

MIL-DTL-38999 Series III Type Connectors

233-380 Receptacle Connector with USB 3.2 Gen 2 (Type C) Female-to-Female Ports



All external dimensions, features, etc. compliant with D38999/20, /24, &/26. Consult factory for additional information.

233-380 Glenair SuperSeal™ USB 3.2 Female to Female Coupler

SuperSeal USB 3.2 connectors are IP67 open face rated and offer complete protection from environmental debris and water ingress common under harsh environ mental conditions. Design meets USB 3.2 Gen 2 (Type C) benchmark data transfer rate requirements for read and write performance requirements.

Part Number Development						
Sample Part Number	**233-380**	**NF**	**00**	**-11**	**N**	**H**
Basic Number	**233-380**					
Material / Finish	**See Material and Finish table**					
Connector Style	**00** = Receptacle, Wall Mount, with Slotted Holes **D0** = Receptacle, Wall Mount, Round Holes **CM** = Receptacle, Wall Mount with Metric Clinch Nuts **CS** = Receptacle, Wall Mount, with Standard Clinch Nuts **07** = Receptacle, Jam-Nut **05** = Recetpacle, Inline					
Shell Size	**11, 13**					
Alternate Polarization	**A, B, C, D, E, N** = Normal					
USB Orientation	**H** = Horizontal **V** = Vertical					

Material and Finish		
Sym.	**Material**	**Finish Description**
NF	aluminum	cadmium, olive drab
ME		electroless nickel (96 hour salt spray)
ZR		zinc nickel, black (tri-valent chromium) RoHS compliant
XM	composite	electroless nickel
Z1	SST	passivate
AB	marine bronze	none (clean only)
Consult factory for other options		

Wall Mount Dimensions						
SHELL SIZE	**A THREAD**	**B SQ**	**B' SQ**	**C BSC**	**D BSC**	**E THREAD**
11	.7500-.1P-.3L-TS-2A	1.043 (26.49) 1.019 (25.88)	1.132 (28.75) 1.092 (27.74)	0.812 (20.62)	0.719 (18.26)	M15 X 1.0-6g 0.100R
13	.8750-.1P-.3L-TS-2A	1.138 (28.91) 1.114 (28.30)	1.226 (31.14) 1.186 (30.12)	0.906 (23.01)	0.812 (20.62)	M18 X 1.0-6g 0.100R

Jam Nut Mount & Inline Dimensions							
SHELL SIZE	**F THREAD**	**ØG**	**H**	**J FLAT**	**K THREAD**	**L THREAD**	**ØM MAX**
11	.7500-.1P-.3L-TS-2A	1.386 (35.20) 1.362 (34.59)	1.268 (32.21) 1.236 (31.39)	0.755 (19.18) 0.745 (18.92)	M20 X 1.0-6g 0.100R	M15 X 1.0-6g 0.100R	0.984 (24.99)
13	.8750-.1P-.3L-TS-2A	1.512 (38.40) 1.488 (37.80)	1.390 (35.31) 1.358 (34.49)	0.942 (23.93) 0.932 (23.67)	M25 X 1.0-6g 0.100R	M18 X 1.0-6g 0.100R	1.157 (29.39)

Panel Cutout & Wall Mount Dimensions						
SHELL SIZE	**ØN MIN**	**ØP MIN**	**R HOLES**	**S BSC**	**ØT**	**U FLAT**
11	0.796 (20.22)	0.625 (15.88)	0.133 (3.38) 0.123 (3.12)	0.812 (20.62)	0.835 (21.21) 0.825 (20.96)	0.771 (19.58) 0.761 (19.33)
13	0.922 (23.42)	0.750 (19.05)		0.906 (23.01)	1.020 (25.91) 1.010 (25.65)	0.955 (24.26) 0.945 (24.00)

Back panel mounting

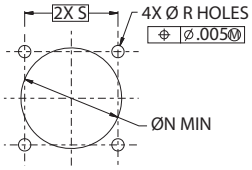

Recommended mounting holes panel thickness .288 max (See panel cutout and wall mount dimensions)

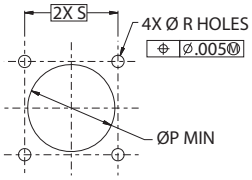

FRONT PANEL MOUNTING

Recommended panel cut out for jam-nut receptacle

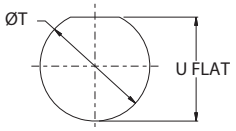

NOTES

1. Meets IP67 in unmated condition, IP68 mated
2. Operating temperature: -20ºC to +85°C

© 2016 Glenair, Inc • 1211 Air Way, Glendale, CA 91201 • 818-247-6000 • www.glenair.com • U.S. CAGE code 06324 • SuperSeal™ Catalog
Dimensions in Inches (millimeters) are subject to change without notice.

00 - WALL MOUNT RECEPTACLE WITH SLOTTED HOLES

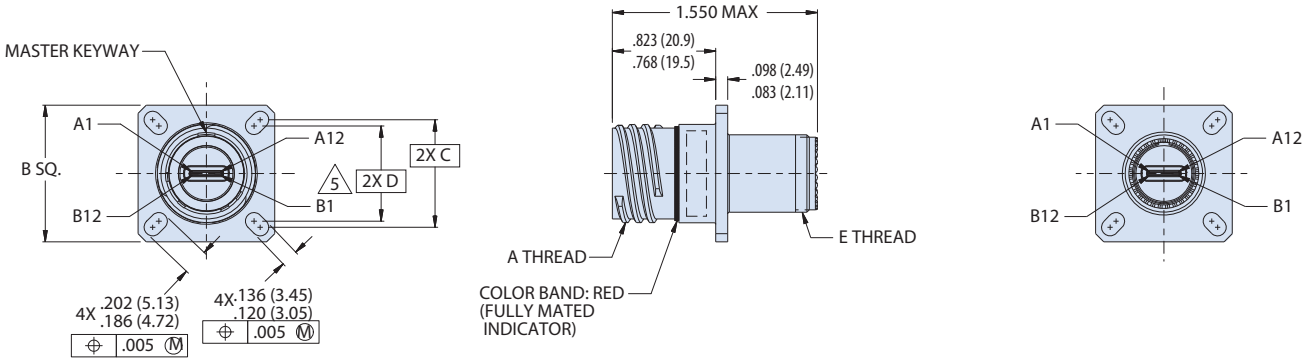

D0 - WALL MOUNT RECEPTACLE WITH ROUND HOLES

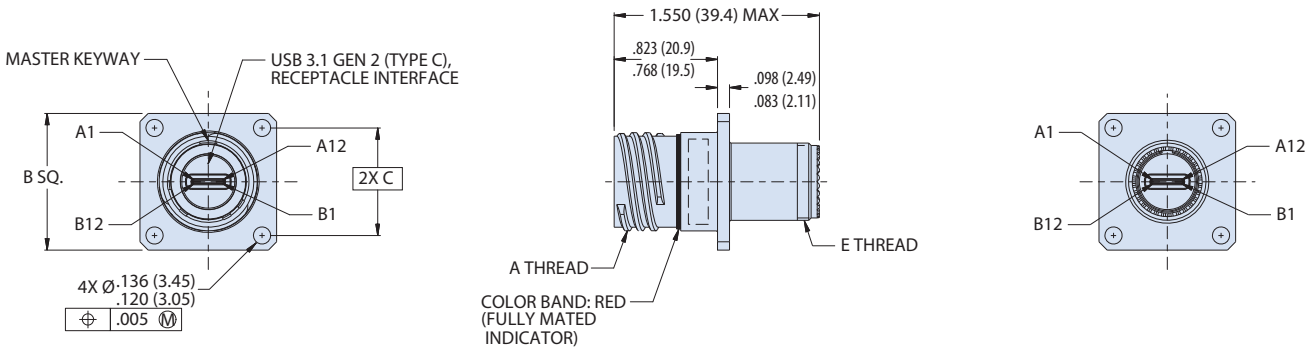

CM - WALL MOUNT RECEPTACLE WITH METRIC CLINCH NUTS

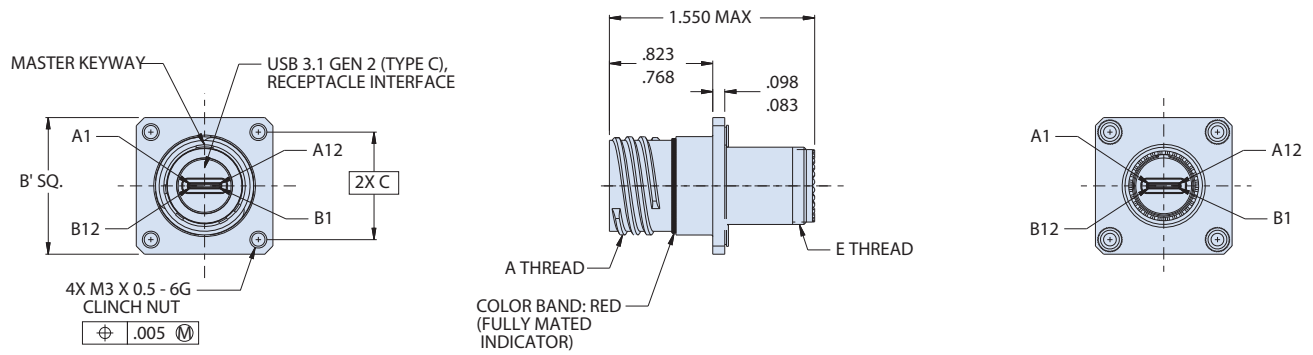

C

© 2016 Glenair, Inc • 1211 Air Way, Glendale, CA 91201 • 818-247-6000 • www.glenair.com • U.S. CAGE code 06324 • SuperSeal™ Catalog
Dimensions in Inches (millimeters) are subject to change without notice.

Rev. 11.05.21

CS - WALL MOUNT RECEPTACLE WITH STANDARD CLINCH NUTS

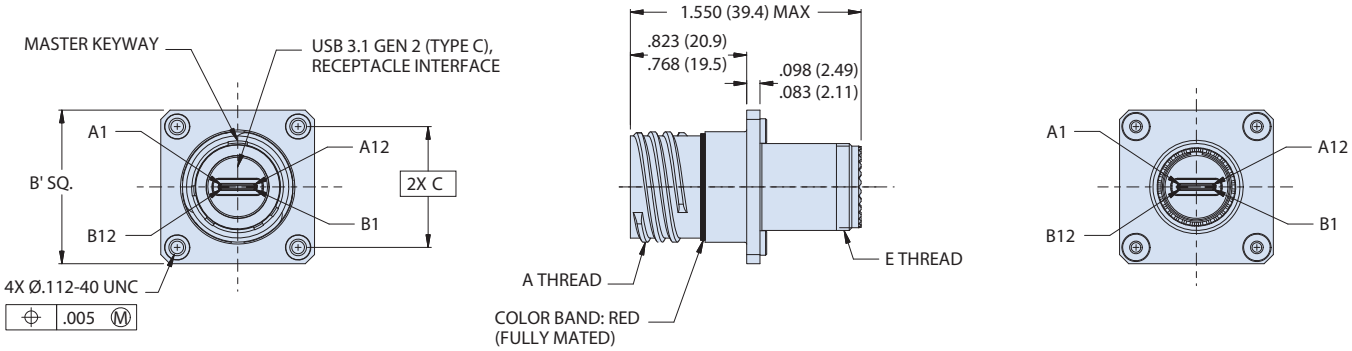

07 - JAM NUT MOUNT RECEPTACLE

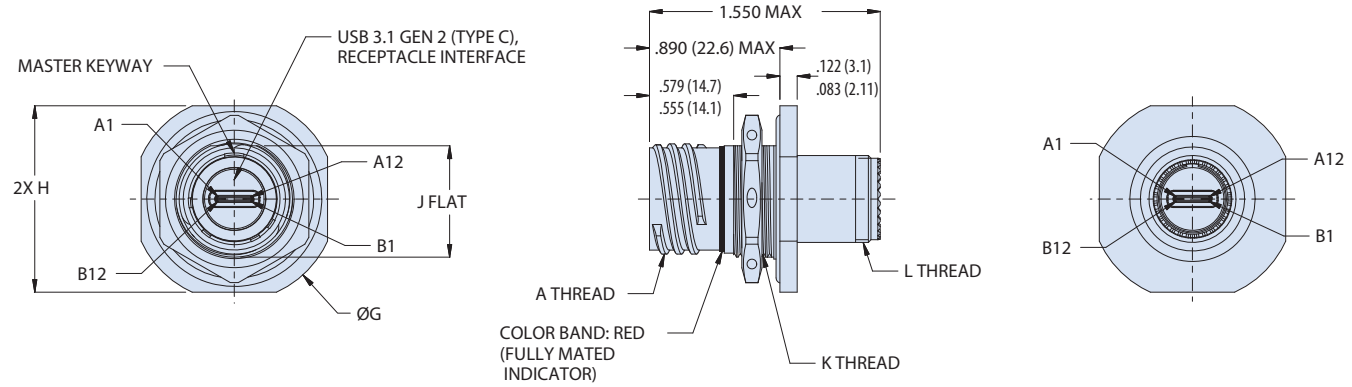

05 - INLINE RECEPTACLE

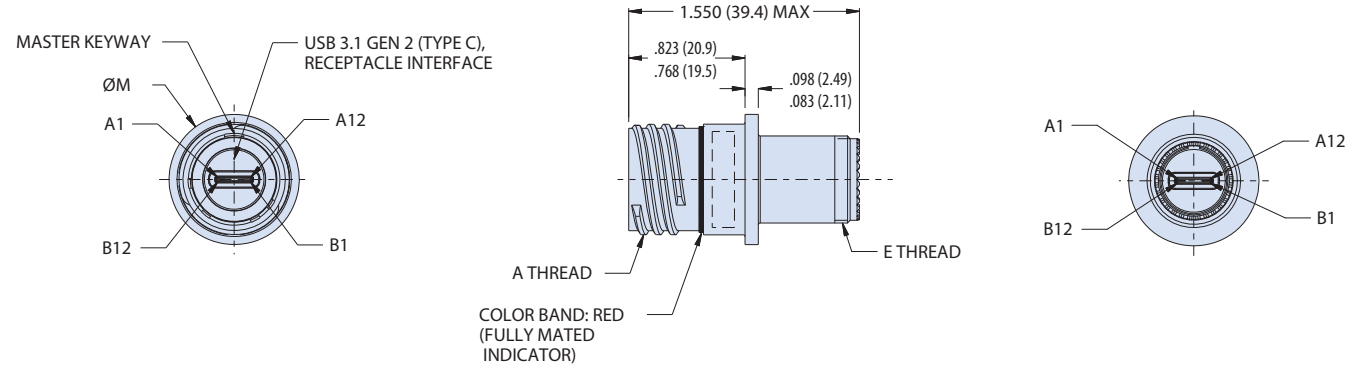

© 2016 Glenair, Inc • 1211 Air Way, Glendale, CA 91201 • 818-247-6000 • www.glenair.com • U.S. CAGE code 06324 • SuperSeal™ Catalog
Dimensions in Inches (millimeters) are subject to change without notice.

233-382 Receptacle Connector with Female USB 3.2 Gen 2 (Type C) Port to PC Tail Termination

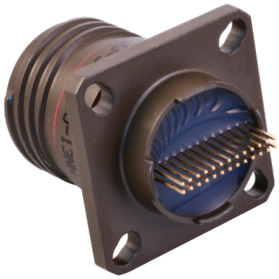

All external dimensions, features, etc. compliant with D38999/20, /24, &/26. Consult factory for additional information.

Material and Finish		
Sym.	**Material**	**Finish Description**
NF	aluminum	cadmium, olive drab
ME		electroless nickel (96 hour salt spray)
ZR		zinc nickel, black (tri-valent chromium) RoHS compliant
XM	composite	electroless nickel
Z1	SST	passivate
AB	marine bronze	none (clean only)
Consult factory for other options		

PANEL CUTOUT DIMENSIONS

Back panel mounting

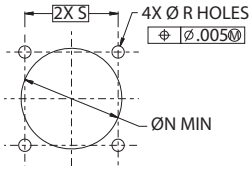

Recommended panel cut out for jam-nut receptacle

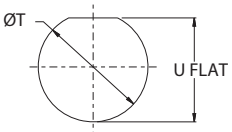

233-382 Glenair SuperSeal™ USB 3.2 Connector with PC Tails

SuperSeal USB 3.2 connectors are IP68 open face rated and offer complete protection from environmental debris and water ingress common under harsh environmental conditions. Design meets USB 3.2 Gen 2 (Type C) benchmark data transfer rate requirements for read and write performance requirements.

Part Number Development					
Sample Part Number	**233-382**	**NF**	**00**	**-11**	**N**
Basic Number	**233-382**				
Material / Finish	**See Material and Finish table**				
Connector Style	**00** = Receptacle, Wall Mount, with Slotted Holes **D0** = Receptacle, Wall Mount, Round Holes **CM** = Recetpacle, Wall Mount with Metric Clinch Nuts **CS** = Receptacle, Wall Mount, with Standdard Clinch Nuts **07** = Receptacle, Jam-Nut				
Shell Size	**11, 13**				
Alternate Polarization	**A, B, C, D, E, N** = Normal				

Wall Mount Dimensions					
SHELL SIZE	A THREAD	B SQ	B' SQ	C BSC	D BSC
11	.7500-.1P-.3L-TS-2A	1.043 (26.49) 1.019 (25.88)	1.132 (28.75) 1.092 (27.74)	0.812 (20.62)	0.719 (18.26)
13	.8750-.1P-.3L-TS-2A	1.138 (28.91) 1.114 (28.30)	1.226 (31.14) 1.186 (30.12)	0.906 (23.01)	0.812 (20.62)

Jam Nut Mount & Inline Dimensions					
SHELL SIZE	F THREAD	ØG	H	J FLAT	K THREAD
11	.7500-.1P-.3L-TS-2A	1.386 (35.20) 1.362 (34.59)	1.268 (32.21) 1.236 (31.39)	0.755 (19.18) 0.745 (18.92)	M20 X 1.0-6g 0.100R
13	.8750-.1P-.3L-TS-2A	1.512 (38.40) 1.488 (37.80)	1.390 (35.31) 1.358 (34.49)	0.942 (23.93) 0.932 (23.67)	M25 X 1.0-6g 0.100R

Panel Cutout & Wall Mount Dimensions						
SHELL SIZE	ØN MIN	ØP MIN	R HOLES	S BSC	ØT	U FLAT
11	0.796 (20.22)	0.625 (15.88)	0.133 (3.38) 0.123 (3.12)	0.812 (20.62)	0.835 (21.21) 0.825 (20.96)	0.771 (19.58) 0.761 (19.33)
13	0.922 (23.42)	0.750 (19.05)		0.906 (23.01)	1.020 (25.91) 1.010 (25.65)	0.955 (24.26) 0.945 (24.00)

NOTES

1. Meets IP67 in unmated condition, IP68 mated
2. Front panel mount only
3. Operating temperature: -20°C to +85°C

© 2016 Glenair, Inc • 1211 Air Way, Glendale, CA 91201 • 818-247-6000 • www.glenair.com • U.S. CAGE code 06324 • SuperSeal™ Catalog

Dimensions in Inches (millimeters) are subject to change without notice.

MIL-DTL-38999 Series III Type Connectors

233-382 Receptacle Connector with Female USB 3.2 Gen 2 (Type C) Port to PC Tail Termination

PC TAIL PINS TO USB TYPE-C WIRING					
PC TAIL PIN	USB C PIN	NAME	PC TAIL PIN	USB C PIN	NAME
1	A4,A9,B4,B9	VBUS	14	A4,A9,B4,B9	VBUS
2	A5	cc1	15	B5	CC2
3	A8	SBU1	16	B8	SBU2
4	A11	RX2+	17	B2	TX2+
5	A10	RX2-	18	B3	TX2-
6	A1,A12,B1,B12	GND	19	A1,A12,B1,B12	GND
7	A7	D-	20	B6	D2+
8	A6	D+	21	B7	D2-
9	A1,A12,B1,B12	GND	22	A1,A12,B1,B12	GND
10	A3	TX1-	23	B10	RX1-
11	A2	TX1+	24	B11	RX1+
12	A1,A12,B1,B12	GND	25	A1,A12,B1,B12	GND
13	A4,A9,B4,B9	VBUS	26	A4,A9,B4,B9	VBUS

PCB LAYOUT (SOLDER SIDE)

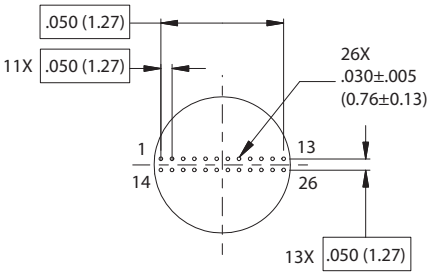

C

00 - WALL MOUNT RECEPTACLE WITH SLOTTED HOLES

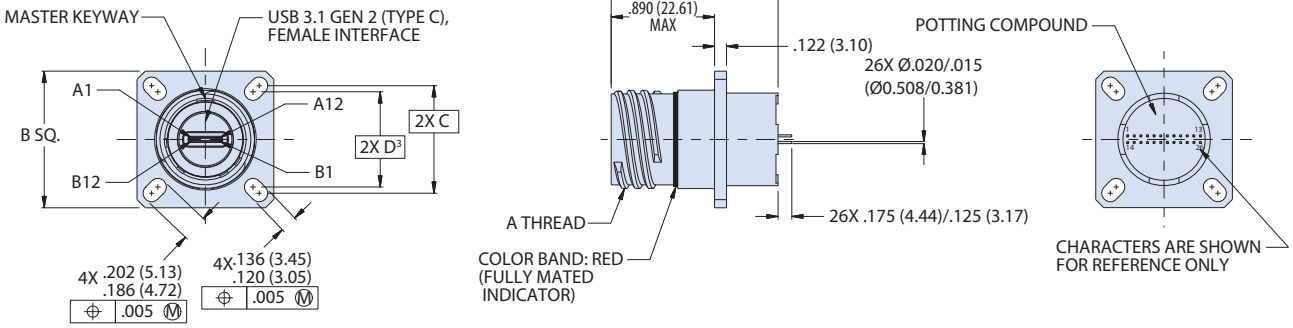

D0 - WALL MOUNT RECEPTACLE WITH ROUND HOLES

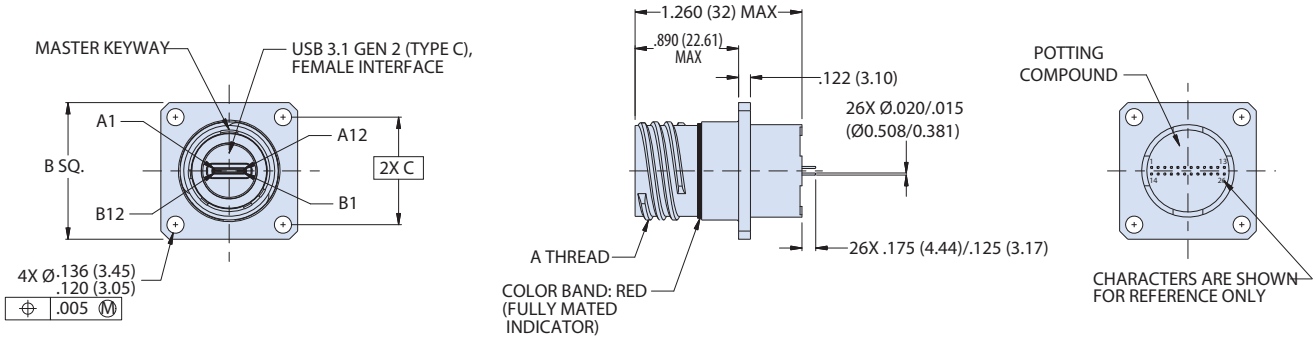

© 2016 Glenair, Inc • 1211 Air Way, Glendale, CA 91201 • 818-247-6000 • www.glenair.com • U.S. CAGE code 06324 • SuperSeal™ Catalog
Dimensions in Inches (millimeters) are subject to change without notice.

233-382 Receptacle Connector with Female USB 3.2 Gen 2 (Type C) Port to PC Tail Termination

CM - WALL MOUNT RECEPTACLE WITH METRIC CLINCH NUTS

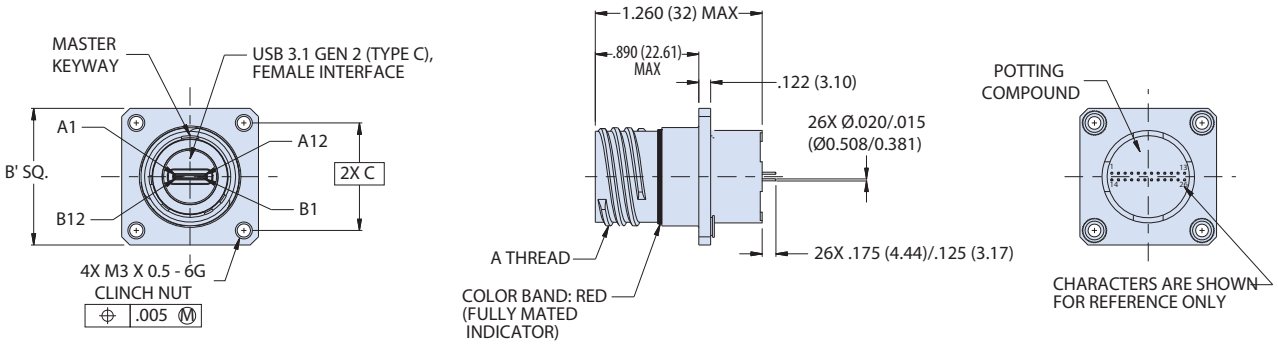

CS - WALL MOUNT RECEPTACLE WITH STANDARD CLINCH NUTS

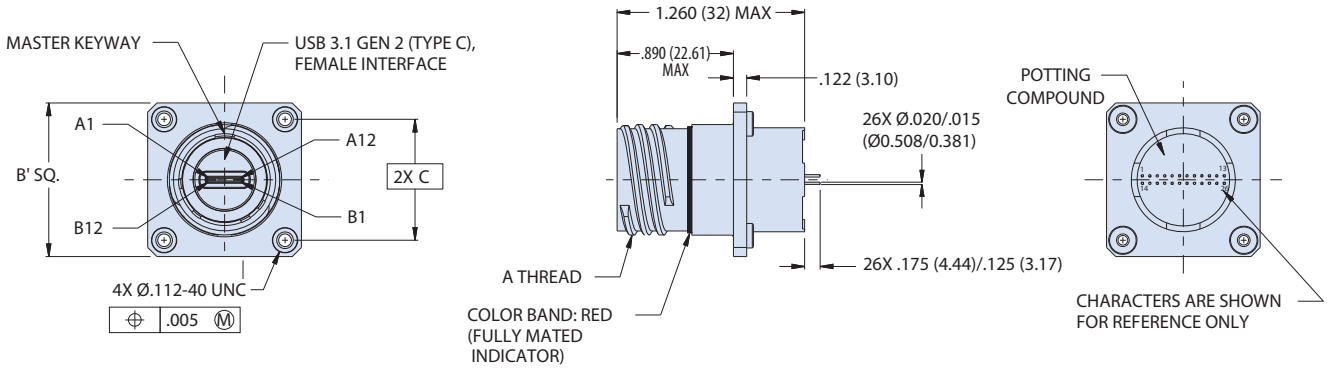

07 - JAM NUT MOUNT RECEPTACLE

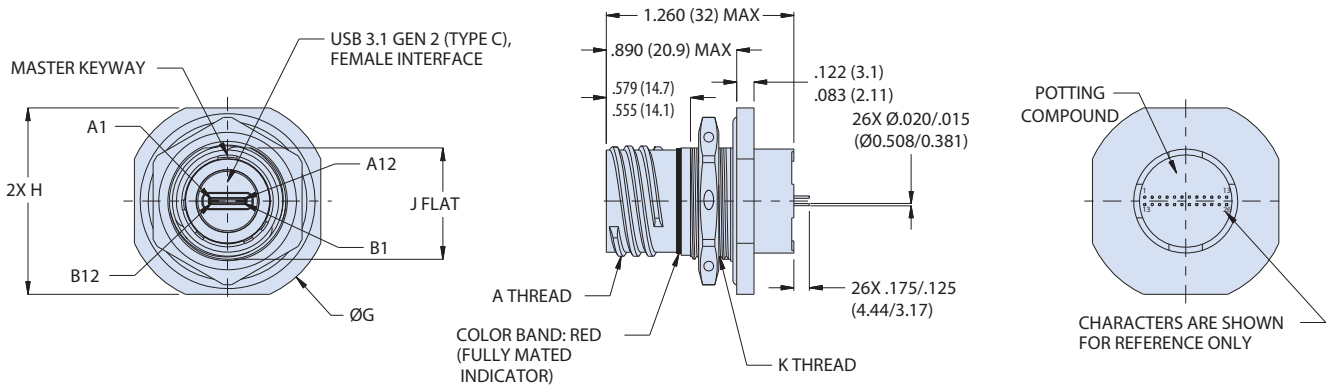

© 2016 Glenair, Inc • 1211 Air Way, Glendale, CA 91201 • 818-247-6000 • www.glenair.com • U.S. CAGE code 06324 • SuperSeal™ Catalog
Dimensions in Inches (millimeters) are subject to change without notice.

233-384 Receptacle Connector with Female USB 3.2 Gen 2 (Type C) Port to Breakout Board



All external dimensions, features, etc. compliant with D38999/20, /24, &/26. Consult factory for additional information.

Material and Finish		
Sym.	**Material**	**Finish Description**
NF	aluminum	cadmium, olive drab
ME		electroless nickel (96 hour salt spray)
ZR		zinc nickel, black (tri-valent chromium) RoHS compliant
XM	composite	electroless nickel
Z1	SST	passivate
AB	marine bronze	none (clean only)
Consult factory for other options		

PANEL CUTOUT DIMENSIONS

Back panel mounting

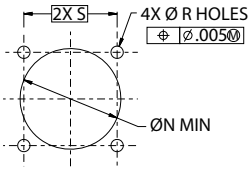

Recommended mounting holes panel thickness .288 max (See panel cutout and wall mount dimensions)

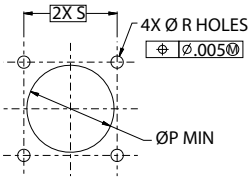

FRONT PANEL MOUNTING

Recommended panel cut out for jam-nut receptacle

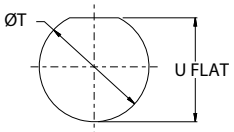

233-384 Glenair SuperSeal™ USB 3.2 to Breakout Board

SuperSeal USB 3.2 connectors are IP67 open face rated and offer complete protection from environmental debris and water ingress common under harsh environmental conditions. Design meets USB 3.2 Gen 2 (Type C) benchmark data transfer rate requirements for read and write performance requirements.

Part Number Development					
Sample Part Number	**233-384**	**NF**	**00**	**-11**	**N**
Basic Number	**233-384**				
Material / Finish	**See Material and Finish table**				
Connector Style	**00** = Receptacle, Wall Mount, with Slotted Holes **D0** = Receptacle, Wall Mount, Round Holes **CM** = Recetpacle, Wall Mount with Metric Clinch Nuts **CS** = Receptacle, Wall Mount, with Standard Clinch Nuts **07** = Receptacle, Jam-Nut **05** = Receptacle, Inline				
Shell Size	**11, 13**				
Alternate Polarization	**A, B, C, D, E, N** = Normal				

Wall Mount Dimensions					
SHELL SIZE	A THREAD	B SQ	B' SQ	C BSC	D BSC
11	.7500-.1P-.3L-TS-2A	1.043 (26.49) 1.019 (25.88)	1.132 (28.75) 1.092 (27.74)	0.812 (20.62)	0.719 (18.26)
13	.8750-.1P-.3L-TS-2A	1.138 (28.91) 1.114 (28.30)	1.226 (31.14) 1.186 (30.12)	0.906 (23.01)	0.812 (20.62)

Jam Nut Mount & Inline Dimensions					
SHELL SIZE	F THREAD	ØG	H	J FLAT	K THREAD
11	.7500-.1P-.3L-TS-2A	1.386 (35.20) 1.362 (34.59)	1.268 (32.21) 1.236 (31.39)	0.755 (19.18) 0.745 (18.92)	M20 X 1.0-6g 0.100R
13	.8750-.1P-.3L-TS-2A	1.512 (38.40) 1.488 (37.80)	1.390 (35.31) 1.358 (34.49)	0.942 (23.93) 0.932 (23.67)	M25 X 1.0-6g 0.100R

Panel Cutout & Wall Mount Dimensions						
SHELL SIZE	ØN MIN	ØP MIN	R HOLES	S BSC	ØT	U FLAT
11	0.796 (20.22)	0.625 (15.88)	0.133 (3.38) 0.123 (3.12)	0.812 (20.62)	0.835 (21.21) 0.825 (20.96)	0.771 (19.58) 0.761 (19.33)
13	0.922 (23.42)	0.750 (19.05)		0.906 (23.01)	1.020 (25.91) 1.010 (25.65)	0.955 (24.26) 0.945 (24.00)

NOTES

1. Meets IP67 in unmated condition, IP68 mated
2. Front panel mount only
3. Operating temperature: -20ºC to +85°C

© 2016 Glenair, Inc • 1211 Air Way, Glendale, CA 91201 • 818-247-6000 • www.glenair.com • U.S. CAGE code 06324 • SuperSeal™ Catalog
Dimensions in Inches (millimeters) are subject to change without notice.

233-384 Receptacle Connector with Female USB 3.2 Gen 2 (Type C) Port to Breakout Board

USB Type-C Wiring					
PAD	**PIN** NAME	**DESCRIPTION**	**PAD**	**PIN** NAME	**DESCRIPTION**
1	A1,A12	GND	12	B1,B12	GND
2	A2	TX1+	13	B2	TX2+
3	A3	TX1-	14	B3	TX2-
4	A4	VBUS	15	B4	VBUS
5	A5	CC1	16	B5	CC2
6	A6	D+	17	B6	D+
7	A7	D-	18	B7	D-
8	A8	SBU1	19	B8	SBU2
9	A9	VBUS	20	B9	VBUS
10	A10	RX2-	21	B10	RX1-
11	A11	RX2+	22	B11	RX1+

CONNECTOR PIN ASSIGNMENTS

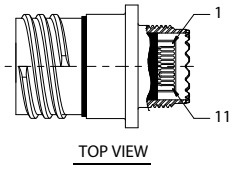

00 - WALL MOUNT RECEPTACLE WITH SLOTTED HOLES

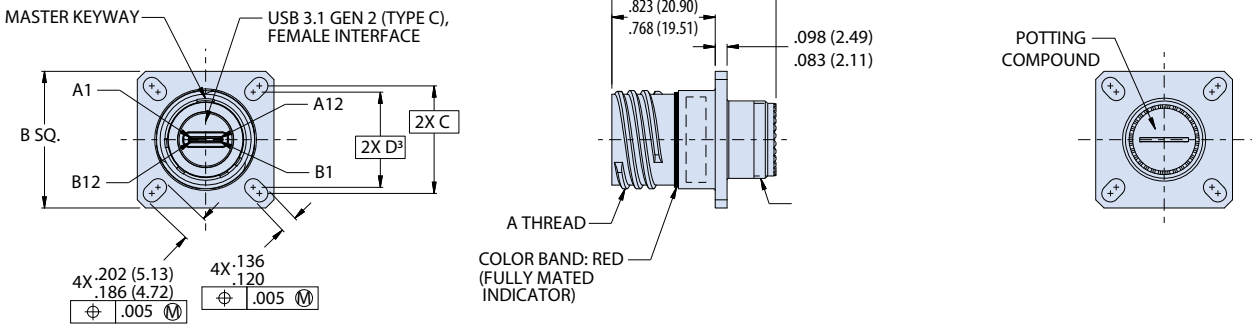

D0 - WALL MOUNT RECEPTACLE WITH ROUND HOLES

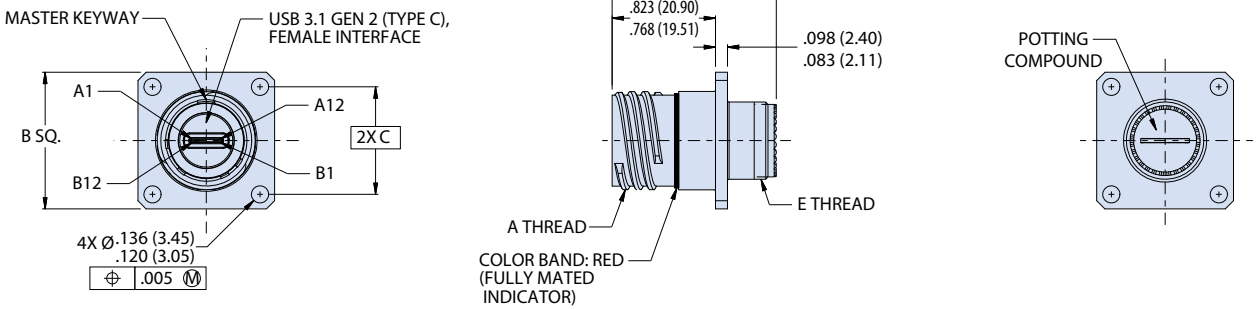

C

© 2016 Glenair, Inc • 1211 Air Way, Glendale, CA 91201 • 818-247-6000 • www.glenair.com • U.S. CAGE code 06324 • SuperSeal™ Catalog
Dimensions in Inches (millimeters) are subject to change without notice.

Rev. 11.05.21

233-384 Receptacle Connector with Female USB 3.2 Gen 2 (Type C) Port to Breakout Board

CM - WALL MOUNT RECEPTACLE WITH METRIC CLINCH NUTS

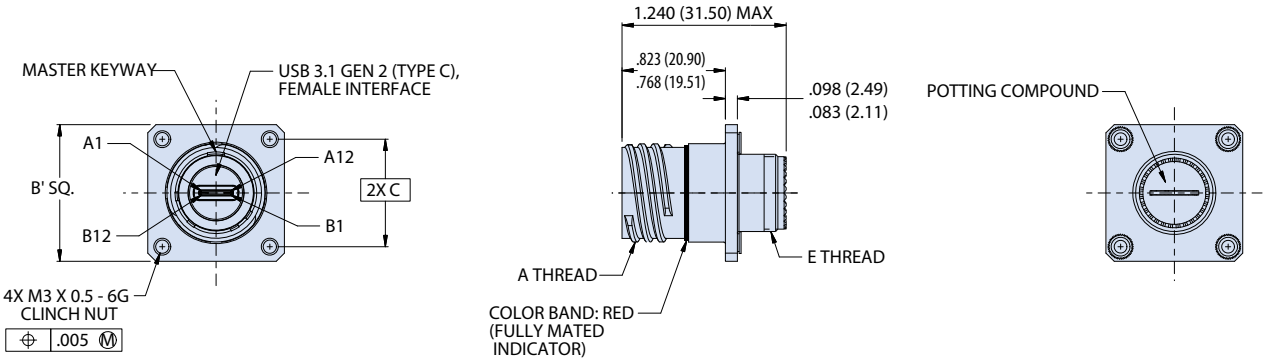

CS - WALL MOUNT RECEPTACLE WITH STANDARD CLINCH NUTS

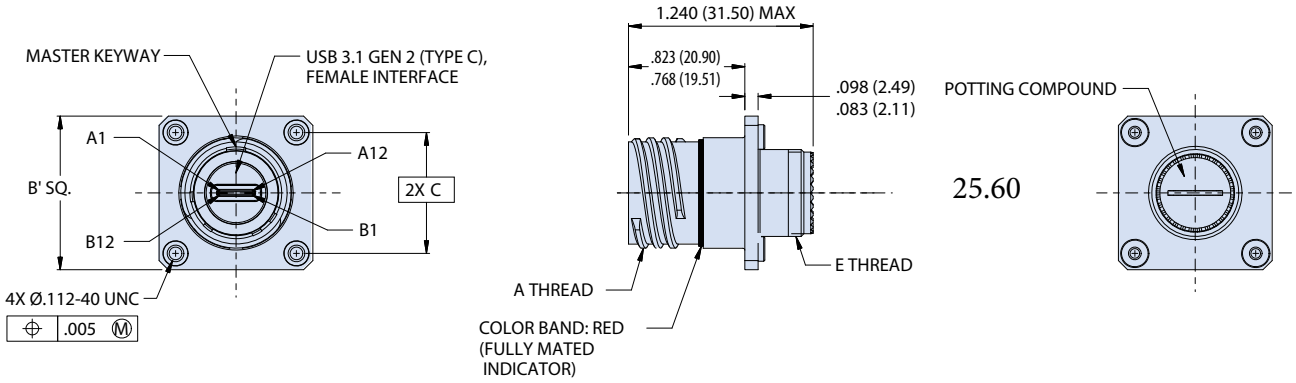

07 - JAM NUT MOUNT RECEPTACLE

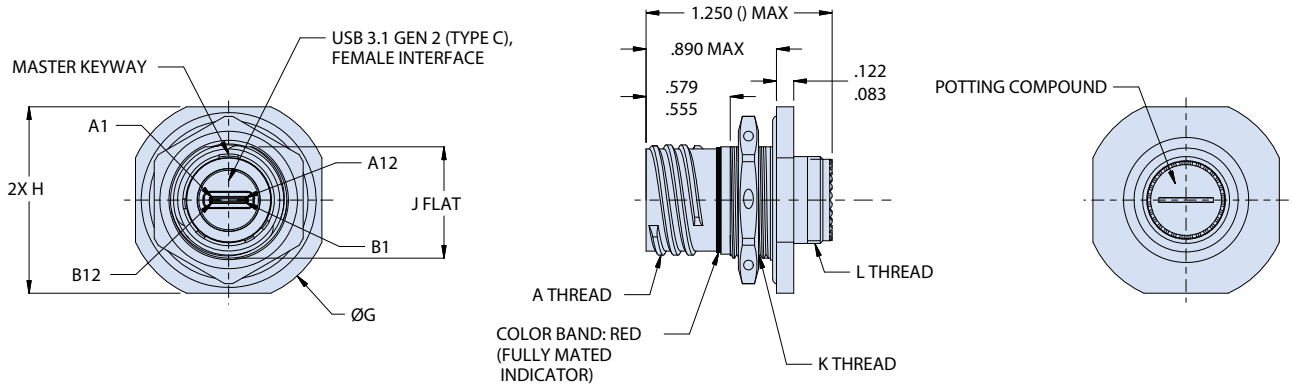

© 2016 Glenair, Inc • 1211 Air Way, Glendale, CA 91201 • 818-247-6000 • www.glenair.com • U.S. CAGE code 06324 • SuperSeal™ Catalog
Dimensions in Inches (millimeters) are subject to change without notice.

233-388 Drive-Thru Plug Connector with Male USB 3.2 Gen 2 (Type C) Plug



233-388 Glenair SuperSeal™ USB 3.2 Plug

SuperSeal USB 3.2 connectors are IP67 in mated condition and offer complete protection from environmental debris and water ingress common under harsh environmental conditions. Drive-thru design utilizes USB 3.2 commercially available cabled connector with nominal outside diameter of 0.189 (4.8). Meets USB 3.2 Gen 2 (Type C) benchmark data transfer rate requirements for read and write performance requirements.

All external dimensions, features, etc. compliant with D38999/20, /24, &/26. Consult factory for additional information.

Part Number Development						
Sample Part Number	**233-388**	**NF**	**G6**	**-13**	**N**	**H**
Basic Number	**233-388**					
Material / Finish	**See Table I**					
Connector Style	**G6** = Plug					
Shell Size	**13**					
Alternate Polarization	**A**, **B**, **C**, **D**, **E**, **N** = Normal					
USB Orientation	**H** = Horizontal **V** = Vertical					

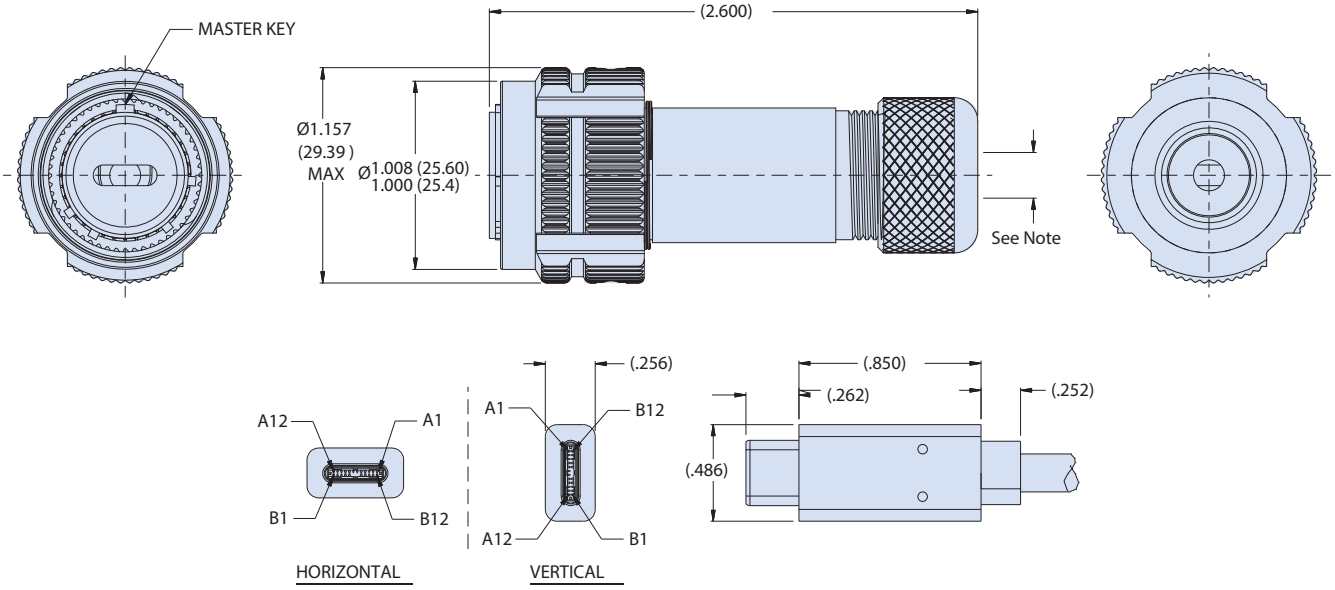

Recommended USB 3.1 Type C Plug Overmold Design

Table I: Material and Finish		
Sym.	**Material**	**Finish Description**
NF	aluminum	cadmium, olive drab
ME		electroless nickel (96 hour salt spray)
ZR		zinc nickel, black (tri-valent chromium) RoHS compliant
XM	composite	electroless nickel
Z1	SST	passivate
AB	marine bronze	none (clean only)
Consult factory for other options		

NOTES

1. IP68 in mated condition
2. Design accommodates cable outside diameter of 0.1879 (4.8) nominal
3. Operating Temperature: -20° C to +85° C

RUGGEDIZED SERIES ITS REVERSE-BAYONET RJ45 CAT 6A CONNECTOR

SUPERSEAL™

Harsh-environment RJ45 data transmission connectors with fast and reliable reverse-bayonet coupling for military vehicle and rail applications





Series ITS SuperSeal™ Advantages

- **Intermountable 5015 style reverse-bayonet connectors for heavy-duty industrial and transportation applications**
- **Reverse-bayonet coupling for fast, reliable mating in hard-to-reach locations**
- **Superior sealing—IP67 (open face) and IP68 (mated)—for complete harsh-environment protection**
- **Crimp contact termination or pigtail cables**
- **Available backshells provide strain-relief and environmental protection**
- **Integrated RJ45 plugs and jacks for Cat 5e high-speed data transmission**

Glenair®

Glenair, Inc.
1211 Air Way
Glendale, CA 91201-2497
818-247-6000
sales@glenair.com
www.glenair.com

RJ45/USB SUPER SEAL™

RJ45 CAT 5E ETHERNET

Series ITS (5015 intermountable) Reverse Bayonet Coupling

Product Selection Guide

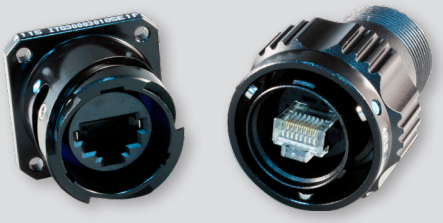

ITS300 Page D-2

SuperSeal™ Coupler with Accessory Threads and Plug-to-Jack (Plug) or Jack-to-Jack (Receptacle).

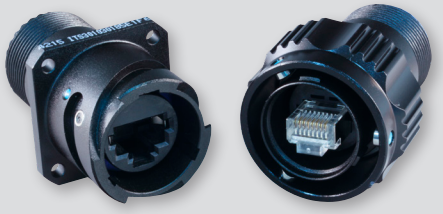

ITS301 Page D-4

SuperSeal™ Connector with Accessory Threads and Plug (Plug) or Jack (Receptacle) to Crimp Removable Contacts.



ITS302 Page D-6

SuperSeal™ Receptacle with RJ45 Jack to PC Tail Termination.



ITS303 Page D-8

SuperSeal™ Receptacle with RJ45 Jack to Solder Cup Termination.



ITS330 Page D-10

SuperSeal™ Feedthrough Receptacle with Jack-to-Jack RJ45.

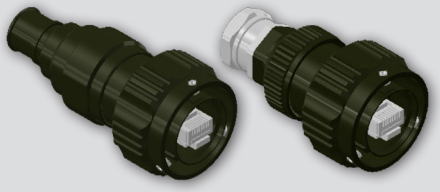

ITS300H Page D-11

SuperSeal™ RJ45 Connector and Backshell with Accessory Options.

D

© 2016 Glenair, Inc • 1211 Air Way, Glendale, CA 91201 • 818-247-6000 • www.glenair.com • U.S. CAGE code 06324 • SuperSeal™ Catalog
Dimensions in Inches (millimeters) are subject to change without notice.

Series ITS (5015 type) Reverse-Bayonet

ITS300 Coupler with Accessory Threads and Plug-to-Jack (Plug) or Jack-to-Jack (Receptacle)



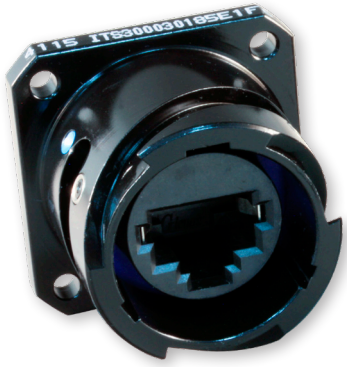

How to Order							
Sample Part Number	**ITS300**	**030**	**G**	**18**	**5E**	**1**	**F7**
Basic Number	**ITS300**						
Connector Style[1]	**030** = Rear Panel Mount Square Flange Receptacle **01** = InLine Receptacle **070** = Rear Panel Mount Jam Nut Receptacle **06** = Straight Plug Connector						
Insert-to-Shell Grounding	**G** = Insert grounded to shell; available for receptacle only (for use with shielded cable) **Omit** = for none						
Shell Size	**18**						
RJ45 Category	**5E** = Cat 5E For Cat 6A applications consult factory						
RJ45 Orientation	**1**, **2**, **3** or **4**						
Material/Finish	**Omit** for Aluminum/Cadmium, Olive Drab (G3) **F6** = Aluminum/Black Polymer Electrocoat **F7** = Aluminum/Conductive Black Zinc Nickel **F11** = Aluminum/Electroless Nickel						

RJ45 Orientation Options

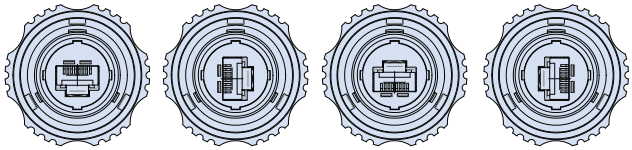

Code 1 Code 2 Code 3 Code 4

Plug

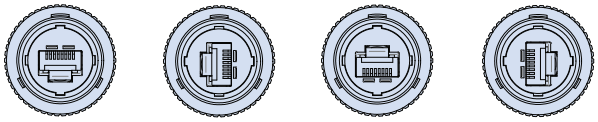

Receptacle
(In-Line Shown)

NOTES

1. See Section A for panel cutout dimensions
2. Plugs are plug/jack and receptacles are jack/jack

06 - PLUG WITH ACCESSORY THREADS

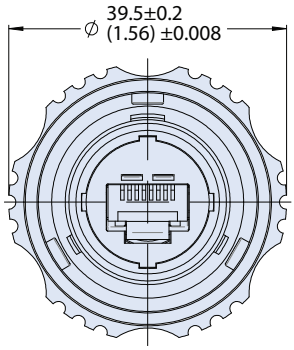

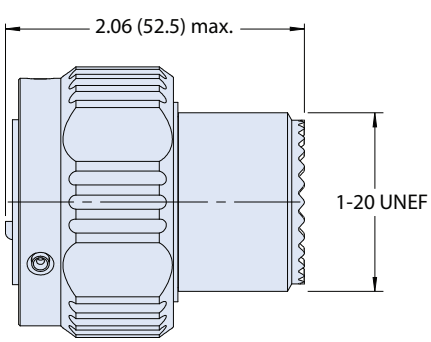

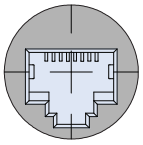

Rear Connector View with RJ45 Jack (Applies to all connector styles)

© 2016 Glenair, Inc • 1211 Air Way, Glendale, CA 91201 • 818-247-6000 • www.glenair.com • U.S. CAGE code 06324 • SuperSeal™ Catalog
Dimensions in Inches (millimeters) are subject to change without notice.

01 - INLINE RECEPTACLE WITH ACCESSORY THREADS

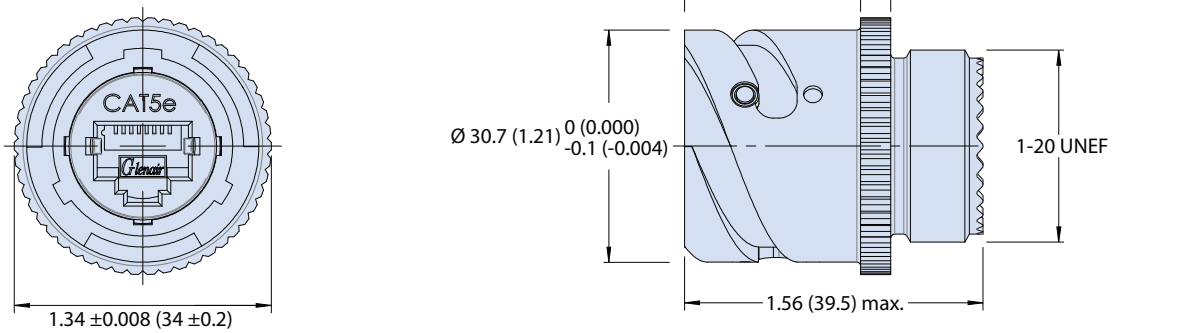

070 - REAR PANEL MOUNT JAM NUT RECEPTACLE WITH ACCESSORY THREADS

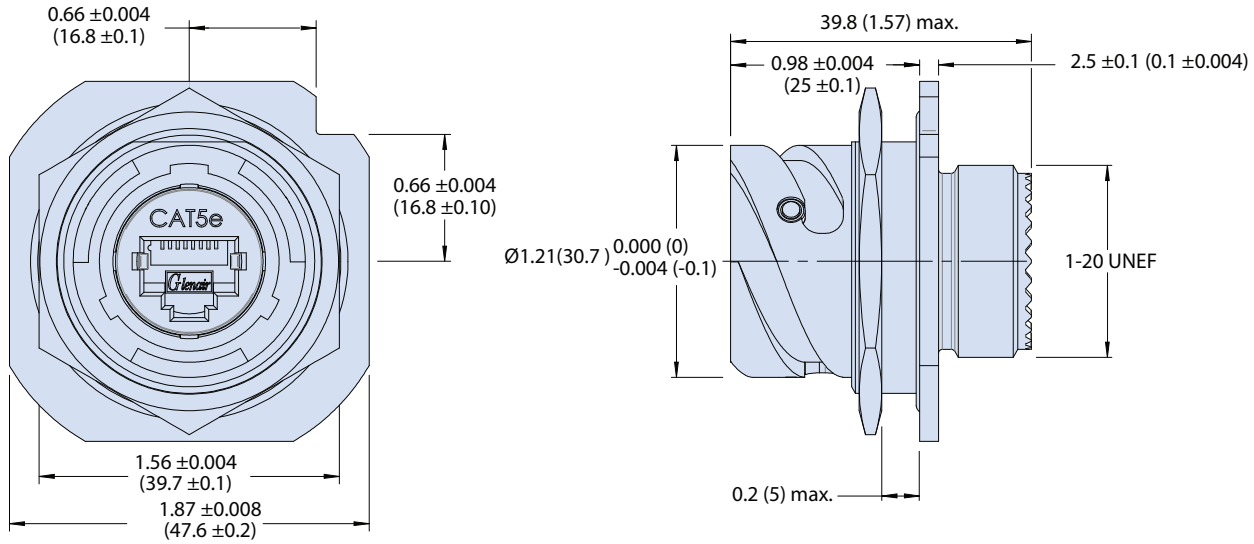

030 - REAR PANEL MOUNT SQUARE FLANGE RECEPTACLE WITH ACCESSORY THREADS

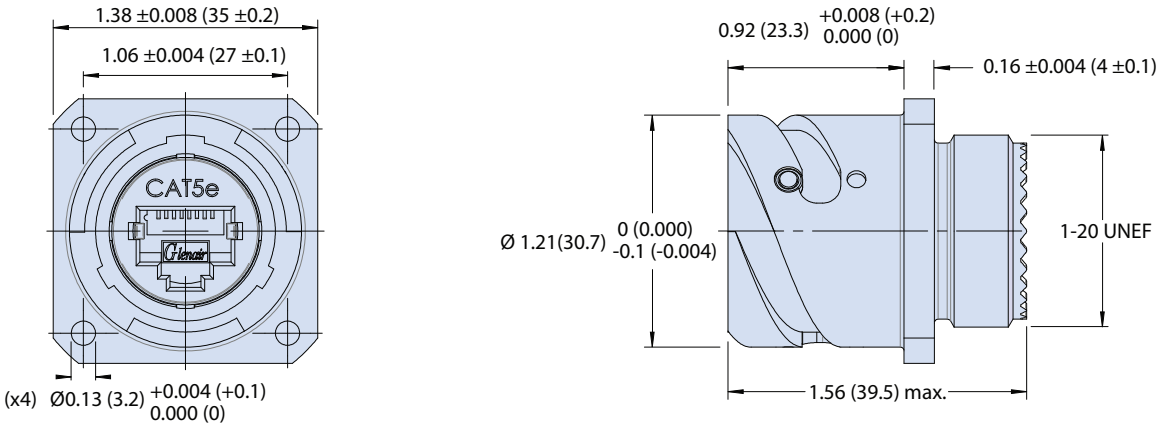

D

© 2016 Glenair, Inc • 1211 Air Way, Glendale, CA 91201 • 818-247-6000 • www.glenair.com • U.S. CAGE code 06324 • SuperSeal™ Catalog
Dimensions in Inches (millimeters) are subject to change without notice.

RJ45/USB SUPER SEAL™

RJ45 CAT 5E ETHERNET

Series ITS (5015 type) Reverse-Bayonet

ITS301 Connector with Accessory Threads and Plug (Plug) or Jack (Receptacle) to Crimp Removable Contacts





How to Order							
Sample Part Number	**ITS301**	**030**	**G**	**18**	**5E**	**1**	**F7**
Basic Number	**ITS301**						
Connector Style[1]	**030** = Rear Panel Mount Square Flange Receptacle **01** = InLine Receptacle **070** = Rear Panel Mount Jam Nut Receptacle **06** = Straight Plug Connector						
Insert-to-Shell Grounding	**G** = Insert grounded to shell; available for receptacle only (for use with shielded cable) **Omit** = for none						
Shell Size	**18**						
RJ45 Category	**5E** = Cat 5E For Cat 6A applications consult factory						
RJ45 Orientation	**1**, **2**, **3** or **4**						
Material/Finish	**Omit** for Aluminum/Cadmium, Olive Drab (G3) **F6** = Aluminum/Black Polymer Electrocoat **F7** = Aluminum/Conductive Black Zinc Nickel **F11** = Aluminum/Electroless Nickel						

RJ45 Orientation Options

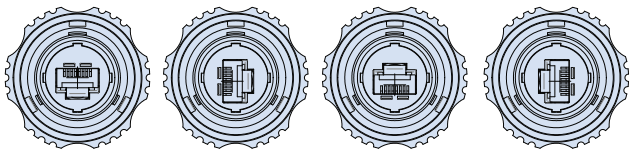

Code 1 Code 2 Code 3 Code 4

Plug

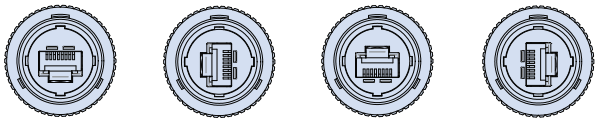

Receptacle
(In-Line Shown)

NOTES

1. See Section A for panel cutout dimensions
2. Crimp removable size 22 contacts (M39029/58-360) supplied loose

06 - PLUG WITH ACCESSORY THREADS

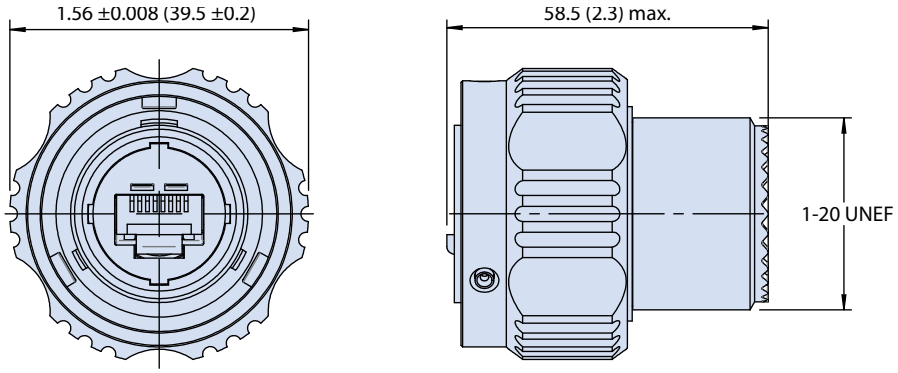

PLUG AND RECEPTACLE REAR TERMINATION VIEW

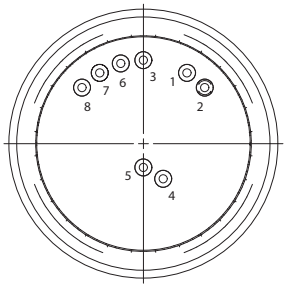

© 2016 Glenair, Inc • 1211 Air Way, Glendale, CA 91201 • 818-247-6000 • www.glenair.com • U.S. CAGE code 06324 • SuperSeal™ Catalog
Dimensions in Inches (millimeters) are subject to change without notice.

01 - INLINE RECEPTACLE WITH ACCESSORY THREADS

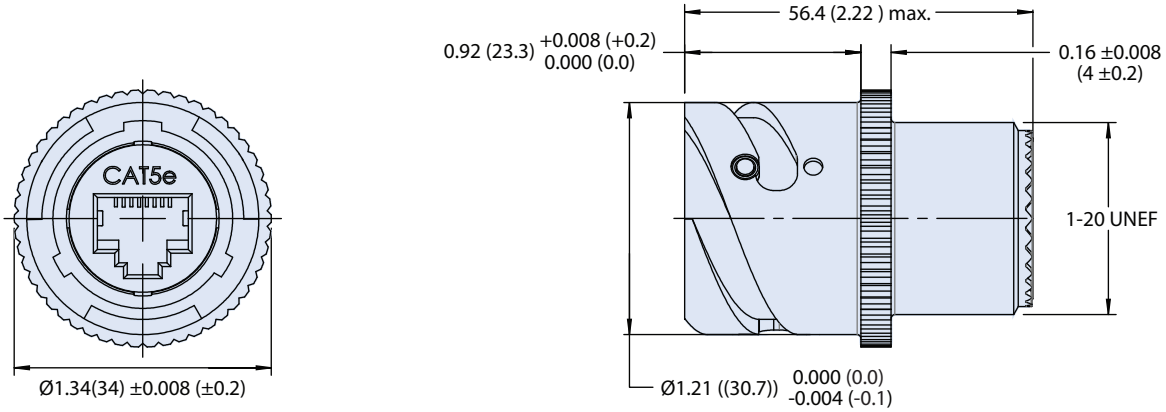

070 - REAR PANEL MOUNT JAM NUT RECEPTACLE WITH ACCESSORY THREADS

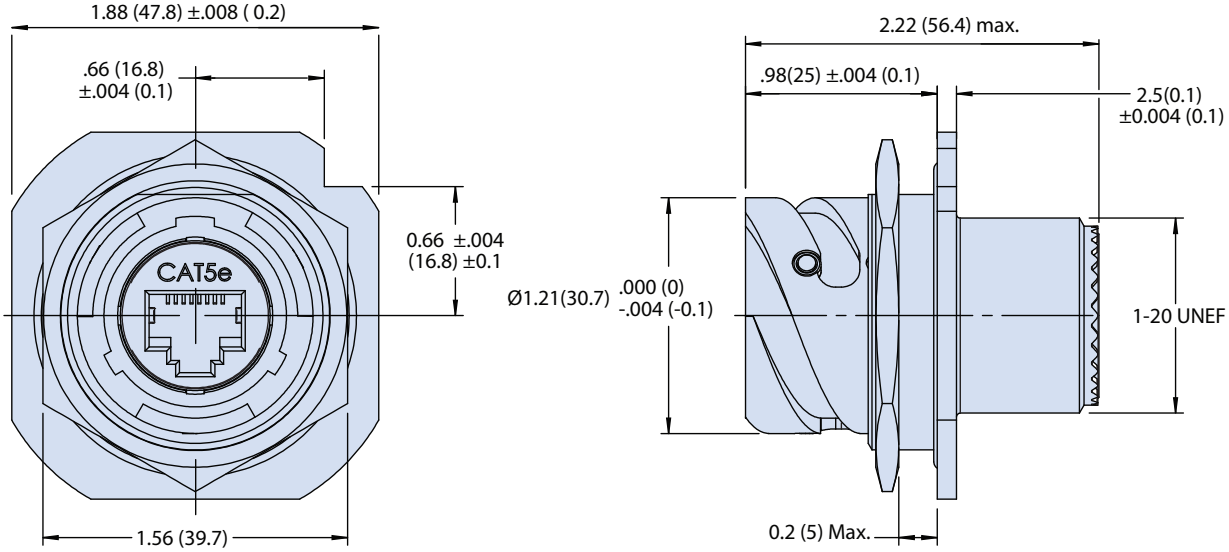

030 - REAR PANEL MOUNT SQUARE FLANGE RECEPTACLE WITH ACCESSORY THREADS

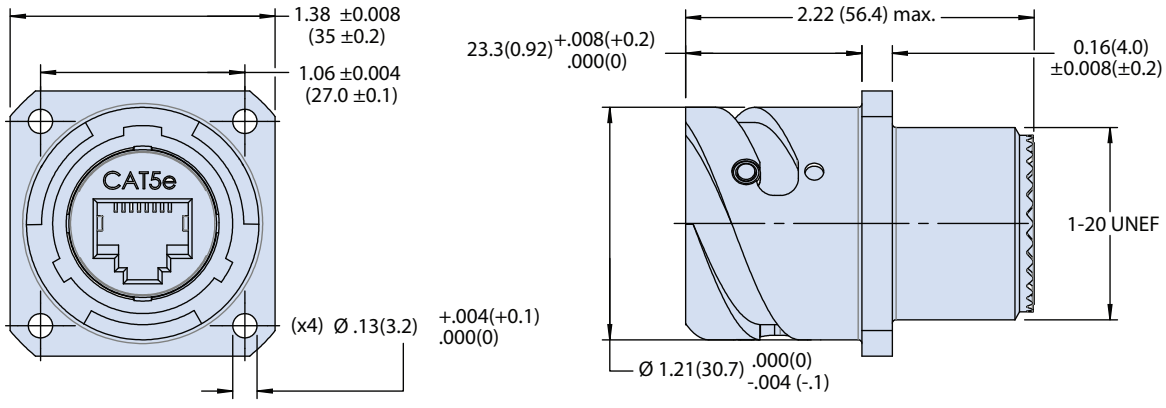

D

© 2016 Glenair, Inc • 1211 Air Way, Glendale, CA 91201 • 818-247-6000 • www.glenair.com • U.S. CAGE code 06324 • SuperSeal™ Catalog
Dimensions in Inches (millimeters) are subject to change without notice.

Series ITS (5015 type) Reverse-Bayonet

ITS302 Receptacle with RJ45 Jack to PC Tail Termination

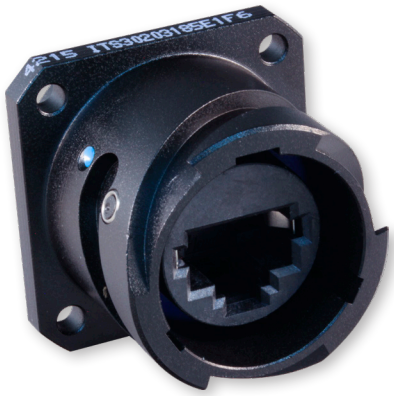



How to Order							
Sample Part Number	**ITS302**	**03**	**G**	**18**	**5E**	**1**	**F7**

Basic Number	**ITS302**
Connector Style[1]	**03** = Rear Panel Mount Square Flange Receptacle **07** = Rear Panel Mount Jam Nut Receptacle
Insert-to-Shell Grounding	**G** = Insert grounded to shell (for use with shielded cable) (Use only with G3, F11 or F7 finish) **Omit** = for none
Shell Size	**18**
RJ45 Category	**5E** = Cat 5E For Cat 6A applications consult factory
RJ45 Orientation	**1**, **2**, **3** or **4**
Material/Finish	**Omit** for Aluminum/Cadmium, Olive Drab (G3) **F6** = Aluminum/Black Polymer Electrocoat **F7** = Aluminum/Conductive Black Zinc Nickel **F11** = Aluminum/Electroless Nickel

RJ45 Orientation Options for Receptacle

(In-line shell sytle shown for reference only, shell style not available)

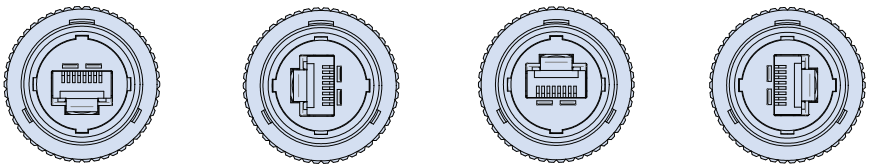

Code 1 Code 2 Code 3 Code 4

D

03 - REAR PANEL MOUNT SQUARE FLANGE RECEPTACLE

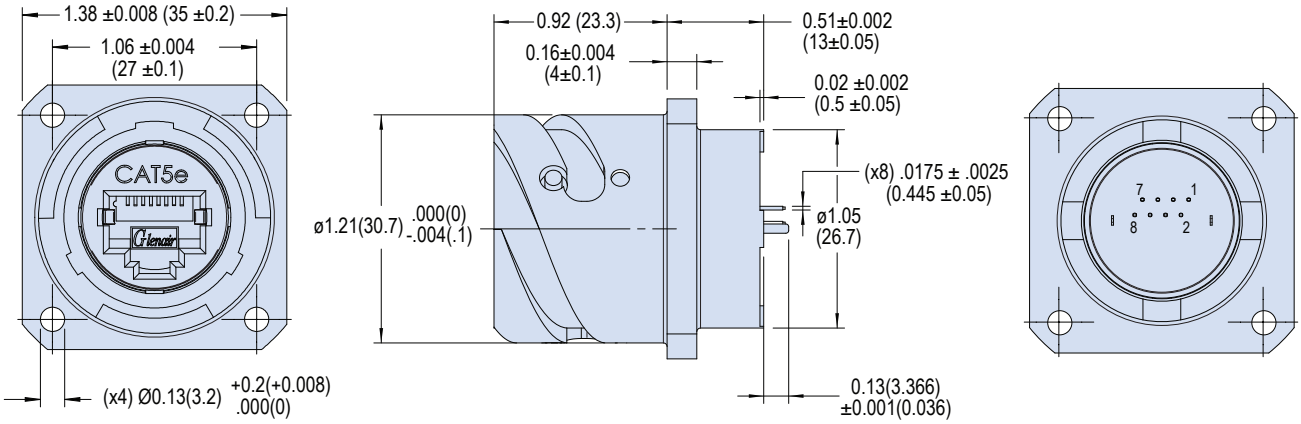

© 2016 Glenair, Inc • 1211 Air Way, Glendale, CA 91201 • 818-247-6000 • www.glenair.com • U.S. CAGE code 06324 • SuperSeal™ Catalog
Dimensions in Inches (millimeters) are subject to change without notice.

07 - REAR PANEL MOUNT JAM NUT RECEPTACLE

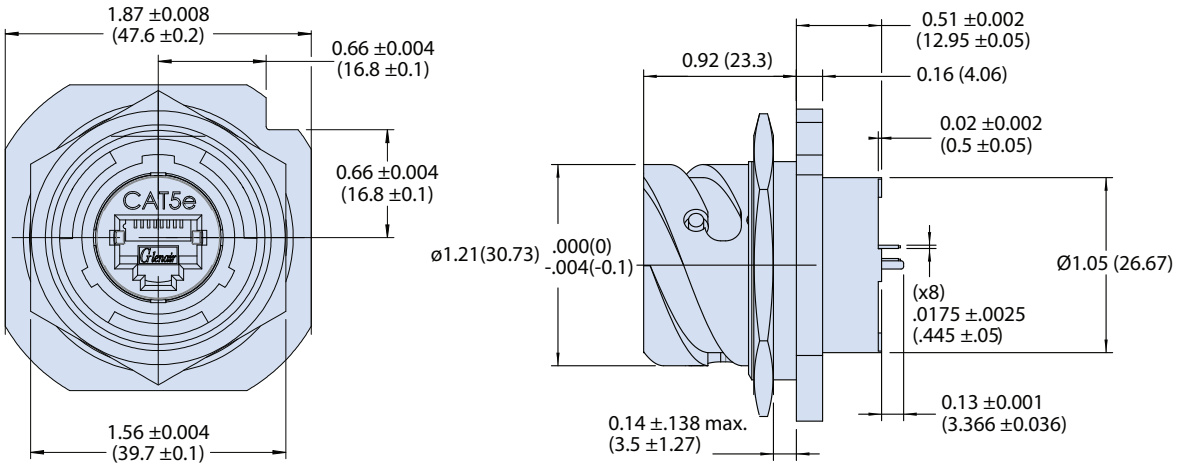

Receptacle RJ45 Orientation Code

Recommended PCB Layout
(Solder Side Of Board)

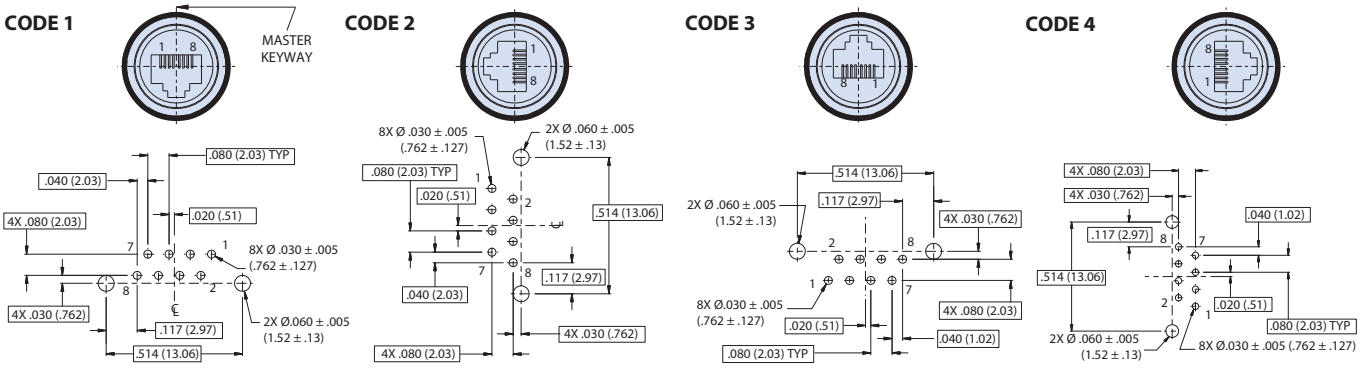

NOTES

1. See Section A for panel cutout dimensions, PCB footprints

D

RJ45/USB SUPER SEAL™

RJ45 CAT 5E ETHERNET

Series ITS (5015 type) Reverse-Bayonet

ITS303 Receptacle with RJ45 Jack to Solder Cup Termination

Glenair





How to Order							
Sample Part Number	**ITS303**	**03**	**G**	**18**	**5E**	**1**	**F7**
Basic Number	**ITS303**						
Connector Style[1]	**03** = Rear Panel Mount Square Flange Receptacle **07** = Rear Panel Mount Jam Nut Receptacle						
Insert-to-Shell Grounding	**G** = Insert grounded to shell (for use with shielded cable) (Use only with G3, F11 or F7 finish) **Omit** = for none						
Shell Size	**18**						
RJ45 Category	**5E** = Cat 5E For Cat 6A applications consult factory						
RJ45 Orientation	**1**, **2**, **3** or **4**						
Material/Finish	**Omit** for Aluminum/Cadmium, Olive Drab (G3) **F6** = Aluminum/Black Polymer Electrocoat **F7** = Aluminum/Conductive Black Zinc Nickel **F11** = Aluminum/Electroless Nickel						

RJ45 Orientation Options for Receptacle

(In-line shell sytle shown for reference only, shell style not available)

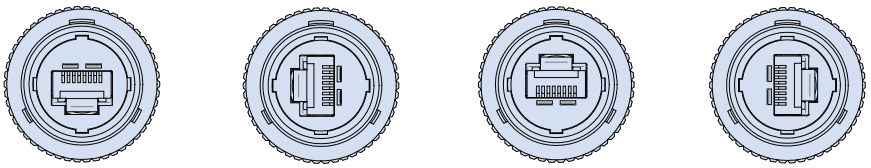

Code 1 Code 2 Code 3 Code 4

NOTES

1. See Section A for panel cutout dimensions

D

03 - REAR PANEL MOUNT SQUARE FLANGE RECEPTACLE

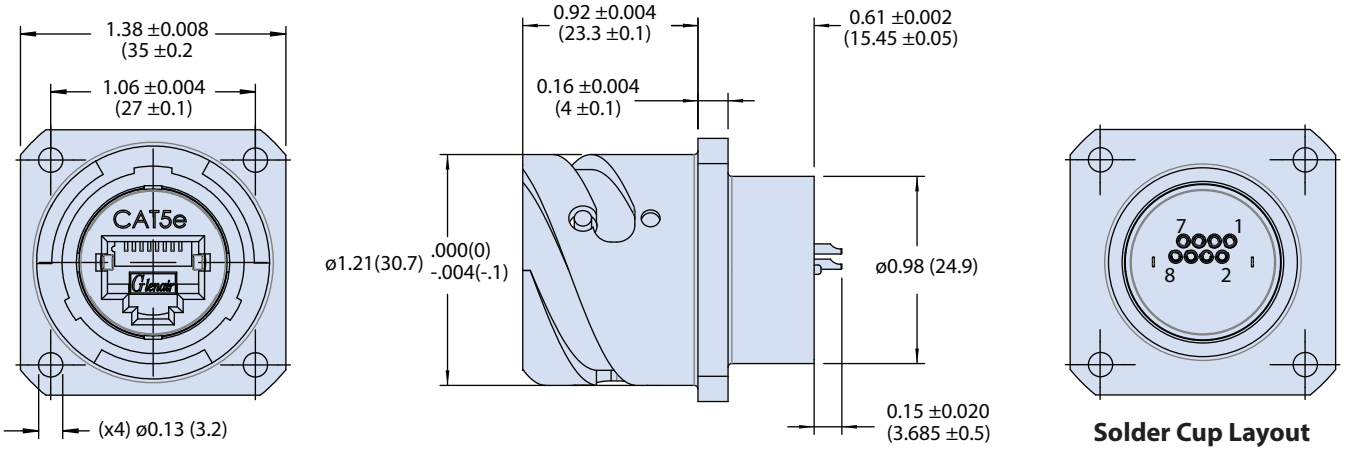

Solder Cup Layout

© 2016 Glenair, Inc • 1211 Air Way, Glendale, CA 91201 • 818-247-6000 • www.glenair.com • U.S. CAGE code 06324 • SuperSeal™ Catalog
Dimensions in Inches (millimeters) are subject to change without notice.

07 - REAR PANEL MOUNT JAM NUT RECEPTACLE

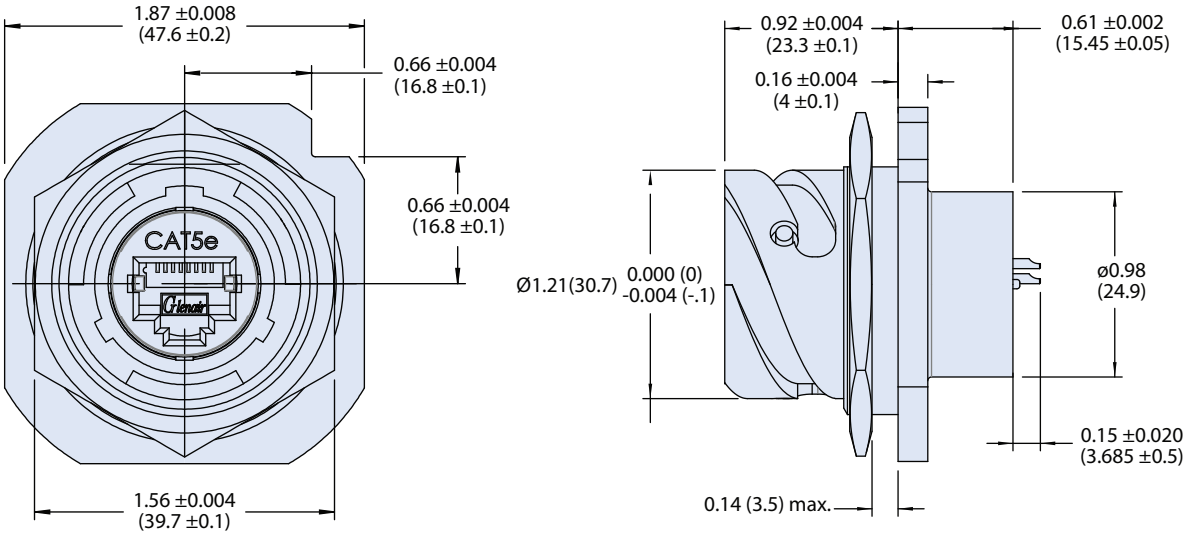

D

© 2016 Glenair, Inc • 1211 Air Way, Glendale, CA 91201 • 818-247-6000 • www.glenair.com • U.S. CAGE code 06324 • SuperSeal™ Catalog
Dimensions in Inches (millimeters) are subject to change without notice.

Series ITS (5015 type) Reverse-Bayonet

ITS330 Feedthrough Receptacle with Jack-to-Jack RJ45



How to Order						
Sample Part Number	**ITS330**	**03PP**	**18**	**5E**	**1**	**F7**
Basic Number	**ITS330**					
Connector Style[1]	**03PP** = Rear Panel Mount Receptacle					
Shell Size	**18**					
RJ45 Category	**5E** = Cat 5E For Cat 6A applications consult factory					
RJ45 Orientation	**1**, **2**, **3** or **4**					
Material/Finish	**Omit** for Aluminum/Cadmium, Olive Drab (G3) **F6** = Aluminum/Black Polymer Electrocoat **F7** = Aluminum/Conductive Black Zinc Nickel **F11** = Aluminum/Electroless Nickel					

NOTES

1. See Section A panel cutout dimensions and complete material and finish options

RJ45 Orientation Options for Receptacle

(In-line shell sytle shown for reference only, shell style not available)

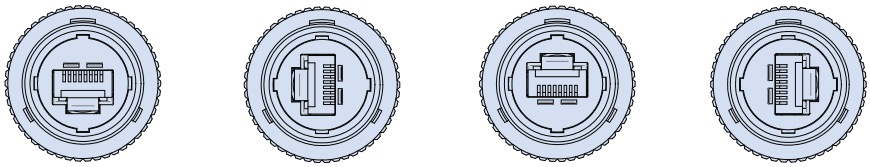

Code 1 Code 2 Code 3 Code 4

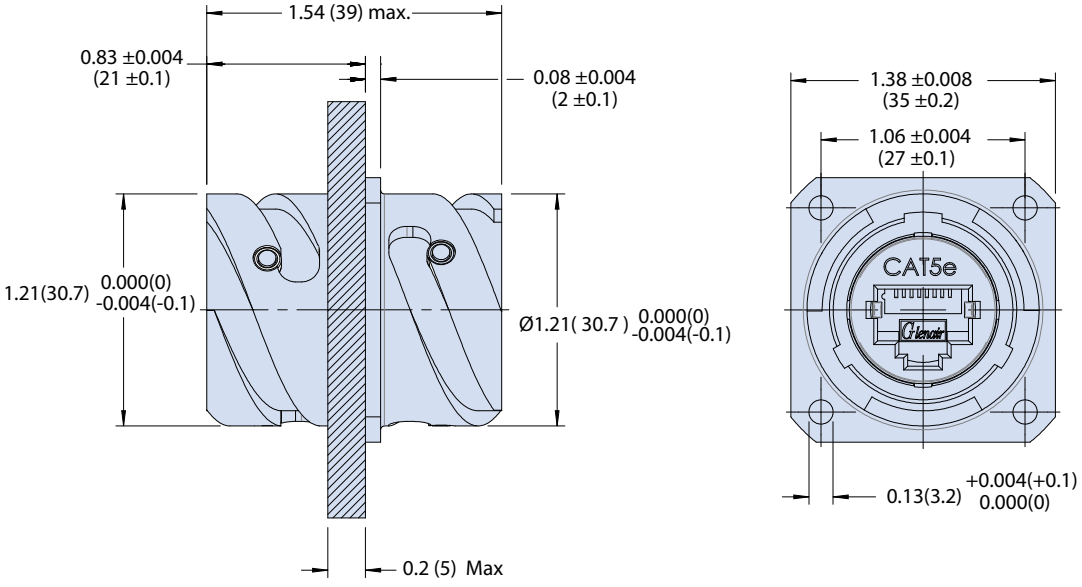

D

© 2016 Glenair, Inc • 1211 Air Way, Glendale, CA 91201 • 818-247-6000 • www.glenair.com • U.S. CAGE code 06324 • SuperSeal™ Catalog
Dimensions in Inches (millimeters) are subject to change without notice.

Series ITS (5015 type) Reverse-Bayonet

ITS300H Connector and Backshell with Banding Porch and Shrink Boot Groove

How to Order									
Sample Part Number		**ITS300H**	**030**	**G**	**18**	**5E**	**1**	**ZL**	**F7**
Basic Number	**ITS300H**								
Connector Style	**030** = Rear Panel Mount Square Flange Receptacle **01** = InLine Receptacle **070** = Rear Panel Mount Jam Nut Receptacle **06** = Straight Plug Connector								
Insert-to-Shell Grounding	**G** = Insert grounded to shell (for use with shielded cable) (Use only with G3, F11 or F7 finish) **Omit** = for none								
Shell Size	**18**								
RJ45 Category	**5E** = Cat 5E For Cat 6A applications consult factory								
RJ45 Orientation	**1**, **2**, **3** or **4**								
Backshell	**ZL =** With banding platform for direct attachment of cable shield and shrinkboot								
Material/Finish	**Omit** for Aluminum/Cadmium, Olive Drab (G3) **F6** = Aluminum/Black Polymer Electrocoat **F7** = Aluminum/Conductive Black Zinc Nickel **F11** = Aluminum/Electroless Nickel								

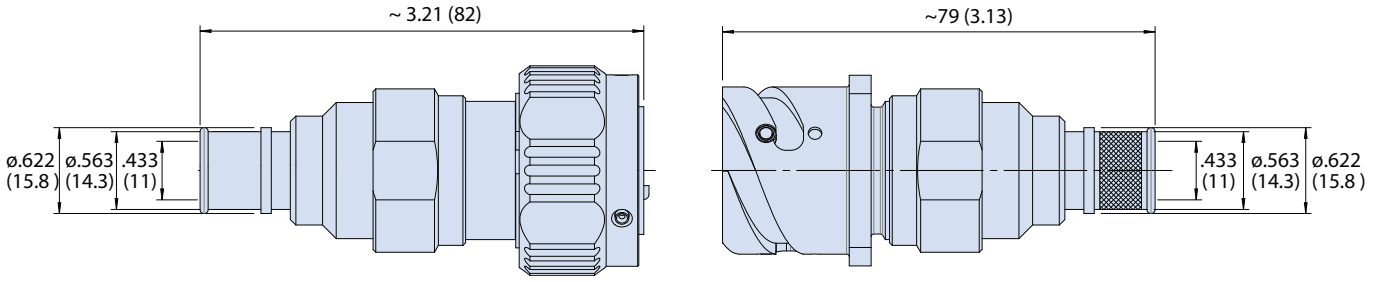

Plug and Receptacle without Pigtail

RJ45 Plug Orientation Options

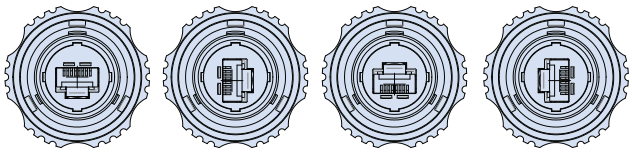

Code 1 Code 2 Code 3 Code 4

RJ45 Receptacle Orientation Options

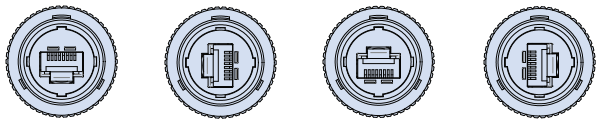

Code 1 Code 2 Code 3 Code 4

HEAT SHRINK BOOT



Glenair P/N : **770-004S903W2**

Must be ordered separately

Type 9 flexible polyolefin short profile boots have an operating temperature range of -40°C to 100°C and provide very good resistance to fuels, oils and solvents. These boots fit most standard boot adapters for circular connectors and are specifically designed for low temperature rated CAT5e and USB cables.

NOTES

1. See Section A panel cutout dimensions

D

© 2016 Glenair, Inc • 1211 Air Way, Glendale, CA 91201 • 818-247-6000 • www.glenair.com • U.S. CAGE code 06324 • SuperSeal™ Catalog
Dimensions in Inches (millimeters) are subject to change without notice.

Series ITS (5015 type) Reverse-Bayonet

ITS300H Connector and Backshell with Pigtail

How to Order									
Sample Part Number	**ITS300H**	**030**	**G**	**18**	**5E**	**1**	**ZL**	**0.5**	**F7**

Basic Number	**ITS300H**
Connector Style[1]	**030** = Rear Panel Mount Square Flange Receptacle **01** = InLine Receptacle **070** = Rear Panel Mount Jam Nut Receptacle **06** = Straight Plug Connector
Insert-to-Shell Grounding	**G** = Insert grounded to shell; available for receptacle only (for use with shielded cable) **Omit** = for none
Shell Size	**18**
Cable Category	**5E** = Cat 5E For Cat 6A applications consult factory
RJ45 Orientation	**1**, **2**, **3** or **4**
Backshell	**ZL** = With banding platform for direct attachment of cable shield and shrinkboot pre-installed
Cable Length	**0.5** = 0.5 meter (20 inch) increments
Material/Finish	**Omit** for Aluminum/Cadmium, Olive Drab (G3) **F6** = Aluminum/Black Polymer Electrocoat **F7** = Aluminum/Conductive Black Zinc Nickel **F11** = Aluminum/Electroless Nickel

RJ45 Plug Orientation Options

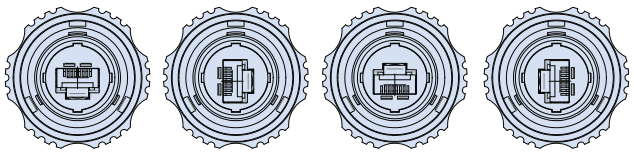

Code 1 Code 2 Code 3 Code 4

RJ45 Receptacle Orientation Options

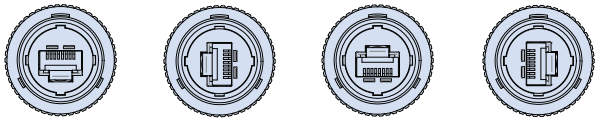

Code 1 Code 2 Code 3 Code 4

Plug and Receptacle with Pigtail

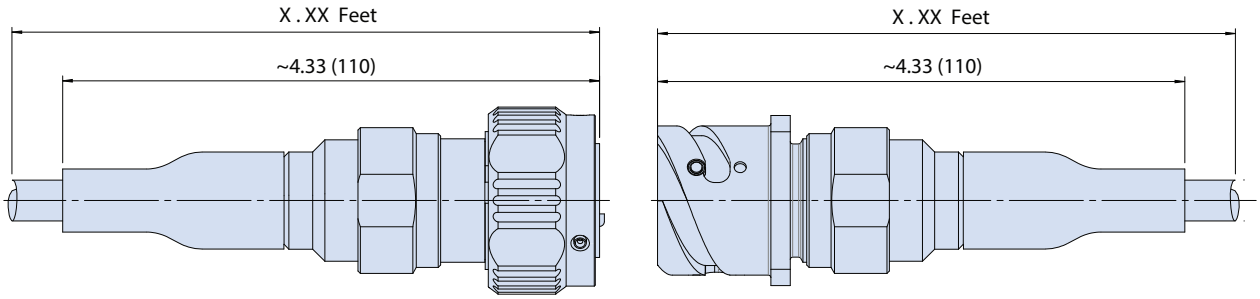

Cable length to be ordered in 20in (0.5 mt) increments

NOTES

1. See Section A panel cutout dimensions

© 2016 Glenair, Inc • 1211 Air Way, Glendale, CA 91201 • 818-247-6000 • www.glenair.com • U.S. CAGE code 06324 • SuperSeal™ Catalog
Dimensions in Inches (millimeters) are subject to change without notice.

Series ITS (5015 type) Reverse-Bayonet

ITS300H Connector and Backshell with Cable Gland Backshell

How to Order									
Sample Part Number		**ITS300H**	**030**	**G**	**18**	**5E**	**1**	**M**	**F7**
Basic Number	**ITS300H**								
Connector Style[1]	**030** = Rear Panel Mount Square Flange Receptacle **01** = InLine Receptacle **070** = Rear Panel Mount Jam Nut Receptacle **06** = Straight Plug Connector								
Insert-to-Shell Grounding	**G** = Insert grounded to shell; available for receptacle only (for use with shielded cable) **Omit** = for none								
Shell Size	**18**								
RJ45 Category	**5E** = Cat 5E For Cat 6A applications consult factory								
RJ45 Orientation	**1**, **2**, **3** or **4**								
Backshell with Internal Thread	**M** = M16 x 1.5 **PG** = PG9								
Material/Finish	**Omit** for Aluminum/Cadmium, Olive Drab (G3) **F6** = Aluminum/Black Polymer Electrocoat **F7** = Aluminum/Conductive Black Zinc Nickel **F11** = Aluminum/Electroless Nickel								

RJ45 Plug Orientation Options

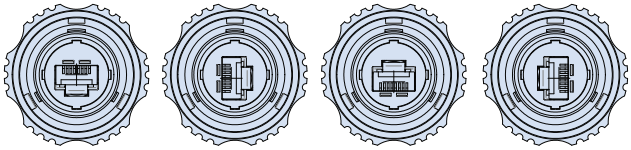

Code 1 Code 2 Code 3 Code 4

RJ45 Receptacle Orientation Options

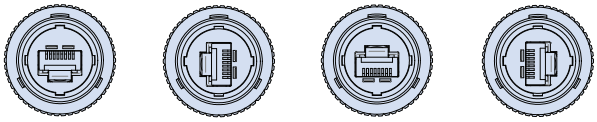

Code 1 Code 2 Code 3 Code 4

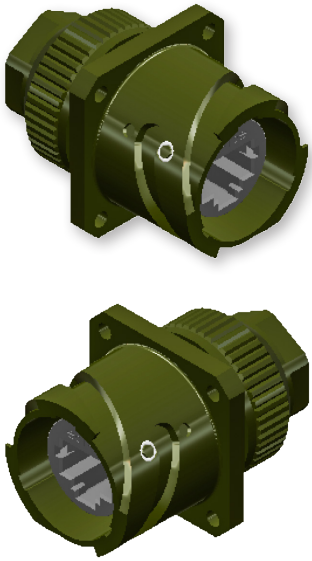

Plug and Receptacle internal threaded backshell without Cable Gland
(Other Backshells option are available, please consult the factory)

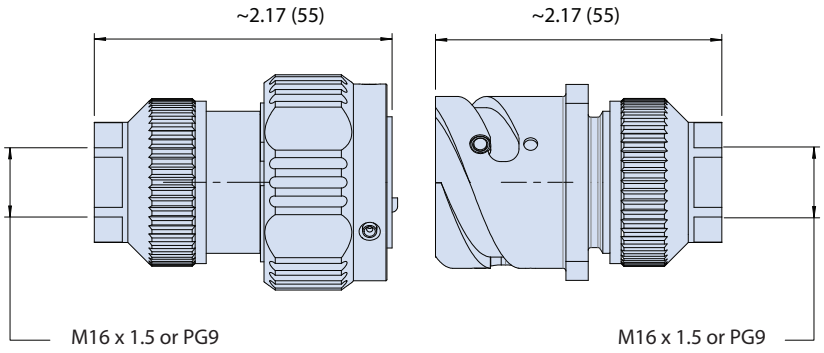

NOTES

1. See Section A panel cutout dimensions

D

© 2016 Glenair, Inc • 1211 Air Way, Glendale, CA 91201 • 818-247-6000 • www.glenair.com • U.S. CAGE code 06324 • SuperSeal™ Catalog
Dimensions in Inches (millimeters) are subject to change without notice.

Series ITS (5015 type) Reverse-Bayonet

ITS300H Connector and Backshell with Metallic Cable Gland with or without Pigtails

How to Order									
Sample Part Number	**ITS300H**	**030**	**G**	**18**	**5E**	**1**	**MS1**	**0.5**	**F6**

Basic Number	**ITS300H**
Connector Style[1]	**030** = Rear Panel Mount Square Flange Receptacle **01** = InLine Receptacle **070** = Rear Panel Mount Jam Nut Receptacle **06** = Straight Plug Connector
Insert-to-Shell Grounding	**G** = Insert grounded to shell; available for receptacle only (for use with shielded cable) **Omit** = for none
Shell Size	**18**
RJ45 Category	**5E** = Cat 5E For Cat 6A applications consult factory
RJ45 Orientation	**1**, **2**, **3** or **4**
Metallic Cable Gland	See Metallic Cable Gland Table
Cable Length	**0.5** = 0.5 meter (20 inch) increments **Omit** for none
Material/Finish	**Omit** for Aluminum/Cadmium, Olive Drab (G3) **F6** = Aluminum/Black Polymer Electrocoat **F7** = Aluminum/Conductive Black Zinc Nickel **F11** = Aluminum/Electroless Nickel



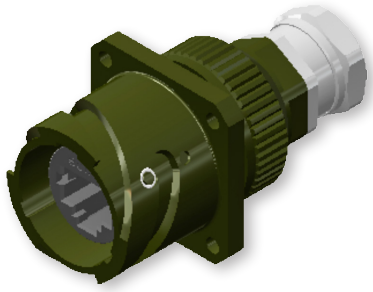

Metallic Cable Gland		
Type	**Cable Range in(mm)**	**Shield**
M1	.24-.31 (6 - 8)	No
M2	.31 - .40 (8 - 10)	No
MS1	.24-.31 (6 - 8)	Yes
MS2	.31-.40 (8 - 10)	Yes

NOTES

1. See Section A panel cutout dimensions

© 2016 Glenair, Inc • 1211 Air Way, Glendale, CA 91201 • 818-247-6000 • www.glenair.com • U.S. CAGE code 06324 • SuperSeal™ Catalog
Dimensions in Inches (millimeters) are subject to change without notice.

PLUG AND RECEPTACLE WITHOUT PIGTAIL

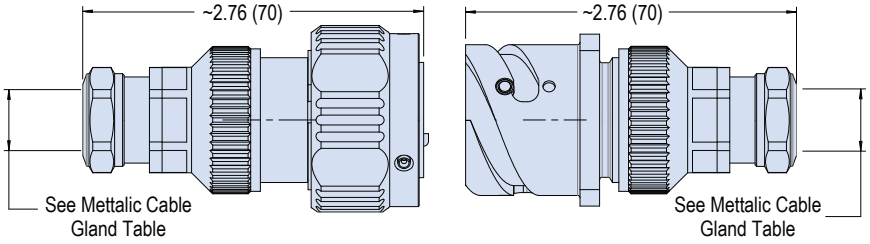

PLUG AND RECEPTACLE WITH PIGTAIL

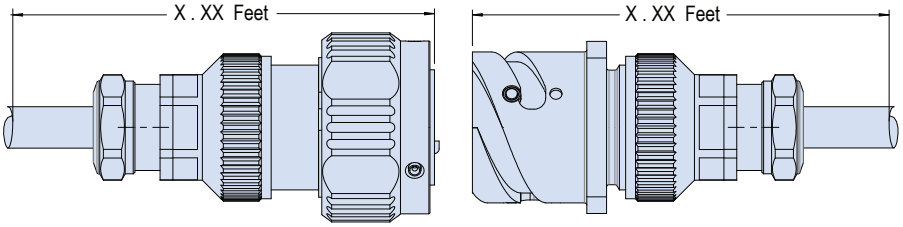

RJ45 Plug Orientation Options

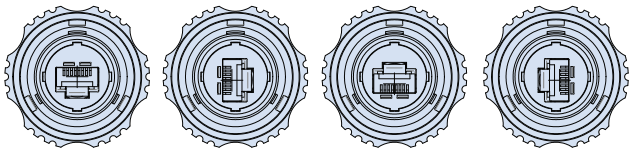

Code 1 Code 2 Code 3 Code 4

RJ45 Receptacle Orientation Options

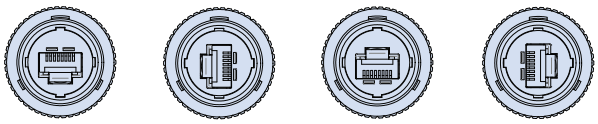

Code 1 Code 2 Code 3 Code 4

D

© 2016 Glenair, Inc • 1211 Air Way, Glendale, CA 91201 • 818-247-6000 • www.glenair.com • U.S. CAGE code 06324 • SuperSeal™ Catalog
Dimensions in Inches (millimeters) are subject to change without notice.

MIL-DTL-5015 TYPE
FIELD-READY
USB 2.0

SUPERSEAL™



Rugged environmental 5015 intermountable reverse bayonet connectors with IP67 sealing, robust insert-to-shell grounding, and complete range of wire, cable, and PCB terminations



Series ITS SuperSeal™ Advantages

- **Intermountable 5015 style reverse-bayonet connectors for heavy-duty industrial and transportation applications**
- **Superior sealing—IP67 open face and IP68 mated — for complete system protection against water, sand and dust**
- **Highly durable USB design, including enhanced operating temperature, increased life-cycle, and rugged vibration and shock performance**
- **Crimp, solder-cup, PC-tail, and wire termination options**
- **USB 2.0 plug and receptacle versions**
- **Available backshells provide strain-relief and environmental protection**

Glenair®

Glenair, Inc.
1211 Air Way
Glendale, CA 91201-2497
818-247-6000
sales@glenair.com
www.glenair.com

RJ45/USB SUPER SEAL™

USB 2.0 TYPE A

Series ITS (5015 intermountable) Reverse Bayonet Coupling

Product Selection Guide

Glenair®



ITS340 Page E-2

SuperSeal™ Coupler with Accessory Threads and USB Male-to-Female (Plug) or Female-to-Female (Receptacle).



ITS342 Page E-4

SuperSeal™ Receptacle with USB Female Interface to PC Tail Termination.



ITS343 Page E-5

SuperSeal™ Receptacle with USB Female Interface to Solder Cup Termination.



ITS345 Page E-6

SuperSeal™ Connectors with Accessory Threads and USB Male (Plug) or Female (Receptacle) to Crimp Removable Contacts.



ITS370 Page E-8

SuperSeal™ Feedthrough Receptacle with USB Female-to-Female Interface.



ITS340H Page E-9

SuperSeal™ Connector and Backshell with Accessory Options.

E

© 2016 Glenair, Inc • 1211 Air Way, Glendale, CA 91201 • 818-247-6000 • www.glenair.com • U.S. CAGE code 06324 • SuperSeal™ Catalog
Dimensions in Inches (millimeters) are subject to change without notice.

USB 2.0 TYPE A

Series ITS (5015 type) Reverse-Bayonet

ITS340 Coupler with Accessory Threads and USB Male-to-Female (Plug) or Female-to-Female (Receptacle)









How to Order								
Sample Part Number	**ITS340**	**030**	**16**	**2**	**A**	**A**	**H**	**F6**

Basic Number	**ITS340**
Connector Style[1]	**06** = Plug with Accessory Thread **01** = InLine Receptacle with Accessory Thread **070** = Rear Panel Mount Jam Nut Receptacle with Accessory Thread **030** = Rear Panel Mount Square Flange Receptacle with Accessory Thread
Shell Size	**16**
USB Performance	**2** = 2.0
USB Front Interface Type	**A** = Type A
USB Rear Interface Type	**A** = Type A
USB Orientation	**H** = Horizontal **V** = Vertical
Material/Finish	**Omit** for Aluminum/Cadmium, Olive Drab (G3) **F6** = Aluminum/Black Polymer Electrocoat **F7** = Aluminum/Conductive Black Zinc Nickel **F11** = Aluminum/Electroless Nickel

USB Orientation Options

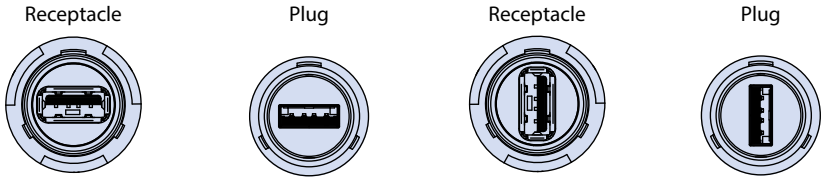

06 - PLUG WITH ACCESSORY THREADS

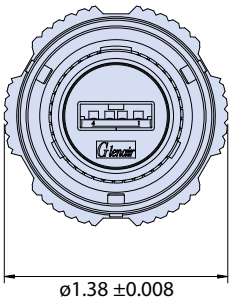

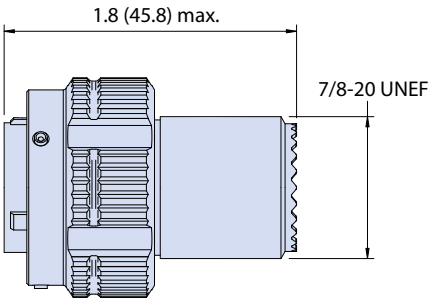

NOTES

1. See Section A for panel cutout dimensions and finish plating options

E

© 2016 Glenair, Inc • 1211 Air Way, Glendale, CA 91201 • 818-247-6000 • www.glenair.com • U.S. CAGE code 06324 • SuperSeal™ Catalog
Dimensions in Inches (millimeters) are subject to change without notice.

01 - INLINE RECEPTACLE WITH ACCESSORY THREADS

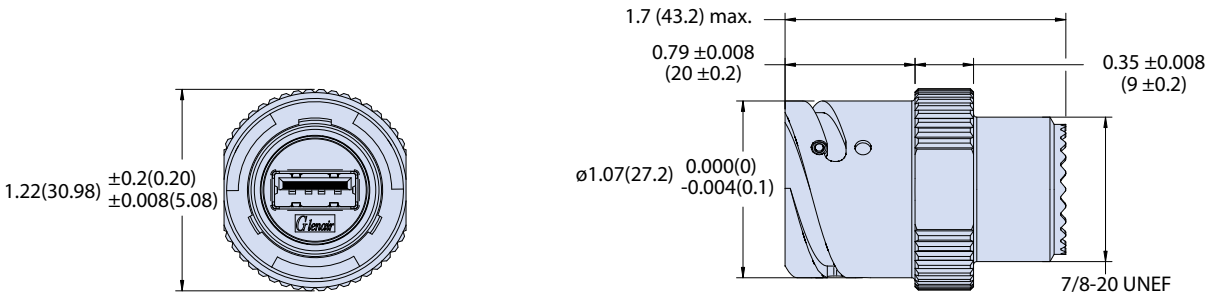

070 - REAR PANEL MOUNT JAM NUT RECEPTACLE WITH ACCESSORY THREADS

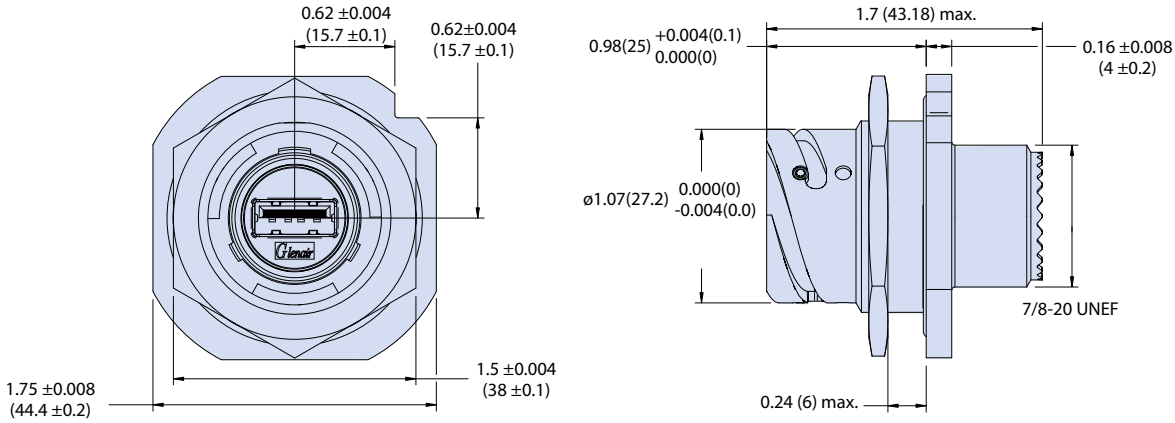

030 - REAR PANEL MOUNT SQUARE FLANGE RECEPTACLE WITH ACCESSORY THREADS

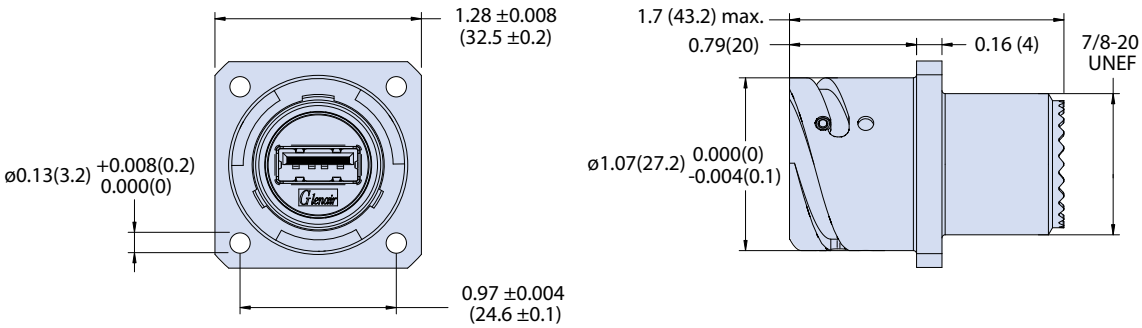

E

© 2016 Glenair, Inc • 1211 Air Way, Glendale, CA 91201 • 818-247-6000 • www.glenair.com • U.S. CAGE code 06324 • SuperSeal™ Catalog
Dimensions in Inches (millimeters) are subject to change without notice.

USB 2.0 TYPE A

Series ITS (5015 type) Reverse-Bayonet

ITS342 Receptacle with USB Female Interface to PC Tail Termination



How to Order							
Sample Part Number	**ITS342**	**03**	**16**	**2**	**A**	**H**	**F6**

Basic Number	**ITS342**
Connector Style[1]	**03** = Rear Panel Mount Square Flange Receptacle **07** = Rear Panel Mount Jam Nut Receptacle
Shell Size	**16**
USB Performance	**2** = 2.0
USB Interface Type	**A** = Type A
USB Orientation	**H** = Horizontal **V** = Vertical
Material/Finish	**Omit** for Al/Cadmium, Olive Drab (G3) **F7** = Al/Conductive Black Zinc Nickel **F6** = Al/Black Polymer Electrocoat **F11** = Al/Electroless Nickel

Rear View
Horizontal USB Orientation
Shown USB 2.0

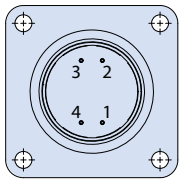

USB Orientation Options

HORIZONTAL
Receptacle



VERTICAL
Receptacle



03 - REAR PANEL MOUNT RECEPTACLE

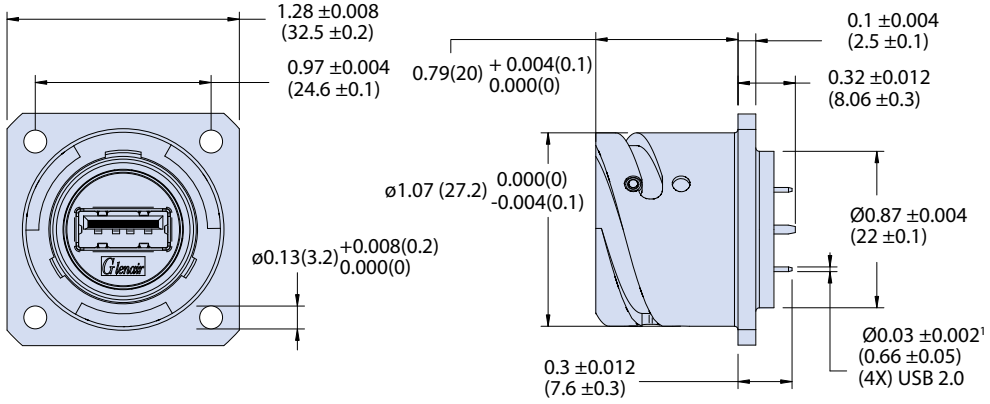

07 - REAR PANEL MOUNT JAM NUT RECEPTACLE

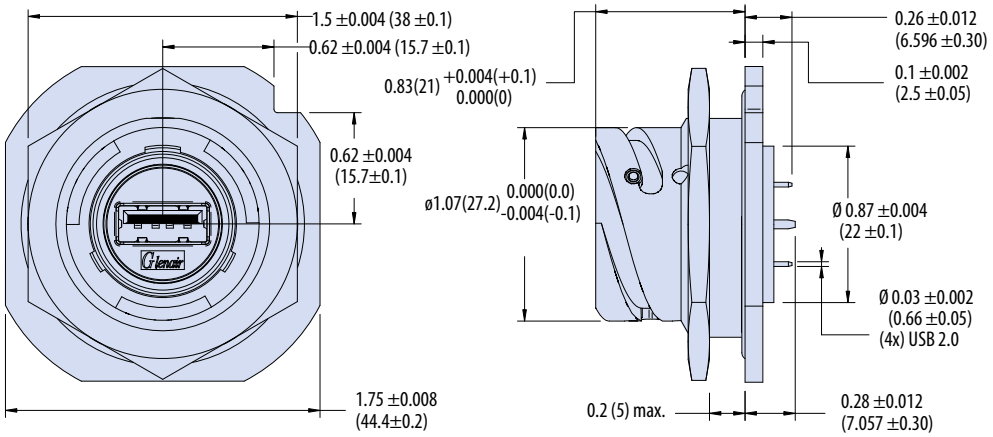

NOTES

1. See Section A for panel cutout dimensions, PCB footprints and complete finish options

© 2016 Glenair, Inc • 1211 Air Way, Glendale, CA 91201 • 818-247-6000 • www.glenair.com • U.S. CAGE code 06324 • SuperSeal™ Catalog
Dimensions in Inches (millimeters) are subject to change without notice.

USB 2.0 TYPE A

Series ITS (5015 type) Reverse-Bayonet

ITS343 Receptacle with USB Female Interface to Solder Cup Termination



How to Order								
Sample Part Number	**ITS343**	**03**	**16**	**2**	**A**	**H**	**F6**	
Basic Number	**ITS343**							
Connector Style	**03** = Rear Panel Mount Square Flange Receptacle **07** = Rear Panel Mount Jam Nut Receptacle							
Shell Size	**16**							
USB Performance	**2** = 2.0							
USB Interface Type	**A** = Type A							
USB Orientation	**H** = Horizontal **V** = Vertical							
Material/Finish	**Omit** for Al/Cadmium, Olive Drab (G3) **F7** = Al/Conductive Black Zinc Nickel **F6** = Al/Black Polymer Electrocoat **F11** = Al/Electroless Nickel							

03 - REAR PANEL MOUNT SQUARE FLANGE RECEPTACLE

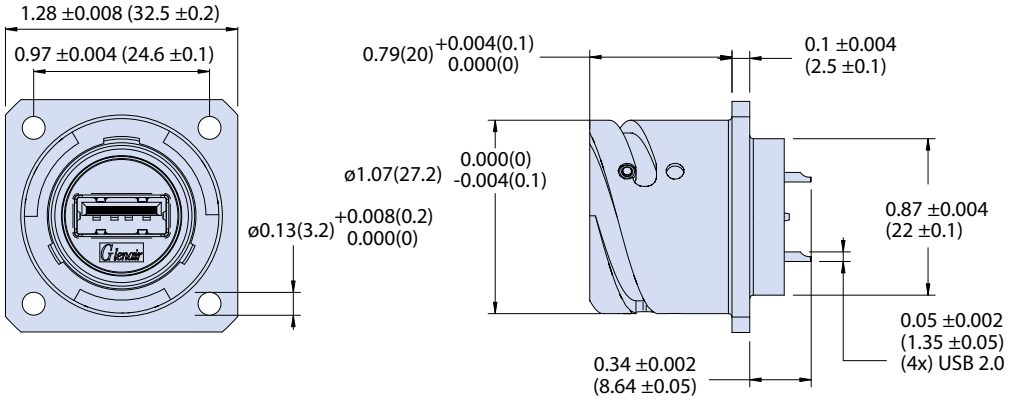

Rear View
Horizontal USB Orientation
Shown USB 2.0

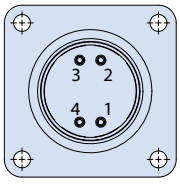

USB Orientation Options

HORIZONTAL
Receptacle



VERTICAL
Receptacle



07 - REAR PANEL MOUNT JAM NUT RECEPTACLE

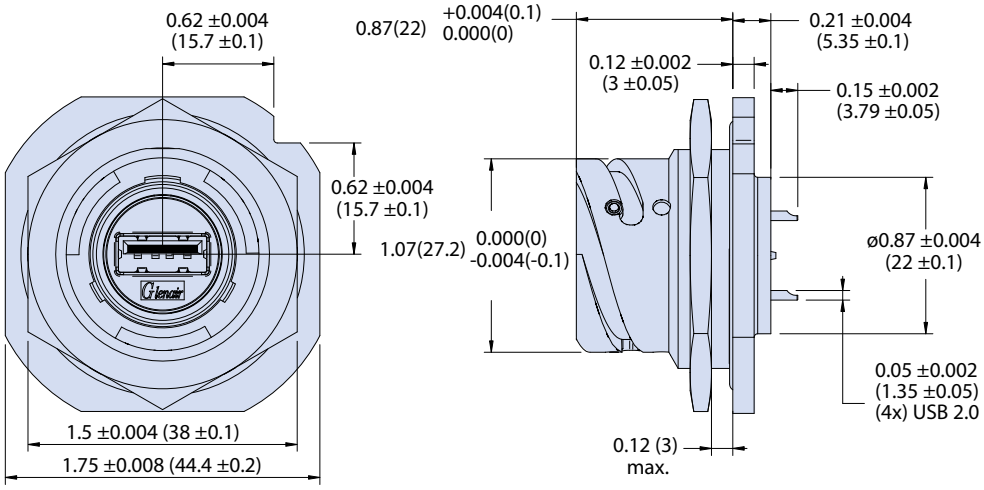

NOTES

1. See Section A for panel cutout dimensions and complete finish options

© 2016 Glenair, Inc • 1211 Air Way, Glendale, CA 91201 • 818-247-6000 • www.glenair.com • U.S. CAGE code 06324 • SuperSeal™ Catalog
Dimensions in Inches (millimeters) are subject to change without notice.

USB 2.0 TYPE A

Series ITS (5015 type) Reverse-Bayonet

ITS345 Connectors with USB Male (Plug) or Female (Receptacle) to Crimp Removable Contacts







Rear View
Horizontal USB Orientation
Shown USB 2.0 Type A Male

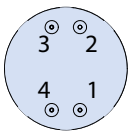

How to Order							
Sample Part Number	**ITS345**	**06**	**16**	**2**	**A**	**H**	**F6**
Basic Number	**ITS345**						
Connector Style[1]	**06** = Plug with Accessory Threads **01** = InLine Receptacle w/ Accessory Thd **070** = Rear Panel Mount Jam Nut Receptacle with Accessory Thread **030** = Rear Panel Mount Squre Flange Receptacle with Accessory Threads						
Shell Size	**16**						
USB Performance	**2** = 2.0						
USB Interface Type	**A** = Type A						
USB Orientation	**H** = Horizontal **V** = Vertical						
Material/Finish	**Omit** for Al/Cadmium, Olive Drab (G3) **F6** = Al/Black Polymer Electrocoat **F7** = Al/Conductive Black Zinc Nickel **F11** = Al/Electroless Nickel						

USB Orientation Options

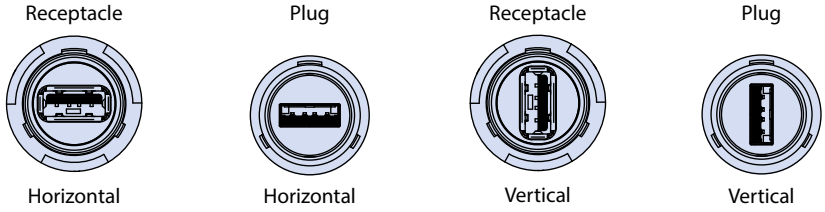

06 - PLUG WITH ACCESSORY THREADS

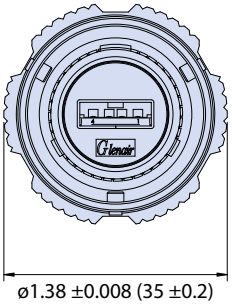

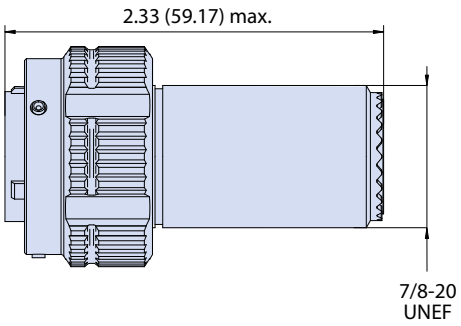

NOTES

1. See Section A for panel cutout dimensions

© 2016 Glenair, Inc • 1211 Air Way, Glendale, CA 91201 • 818-247-6000 • www.glenair.com • U.S. CAGE code 06324 • SuperSeal™ Catalog
Dimensions in Inches (millimeters) are subject to change without notice.

01 - INLINE RECEPTACLE WITH ACCESSORY THREADS

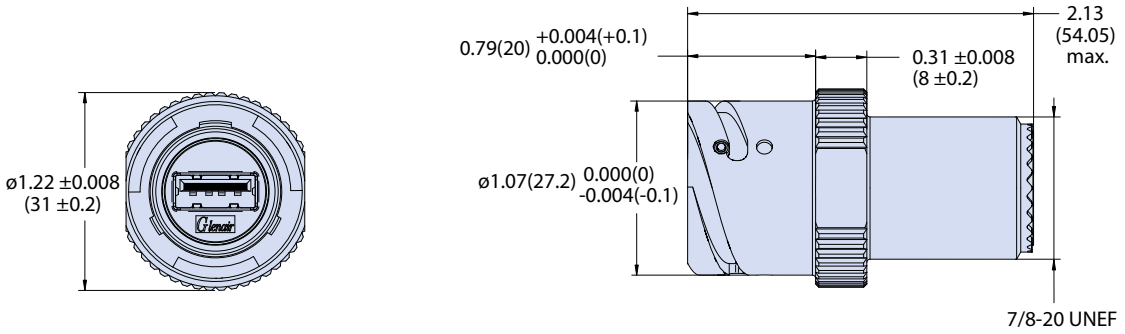

070 - REAR PANEL MOUNT JAM NUT RECEPTACLE WITH ACCESSORY THREADS

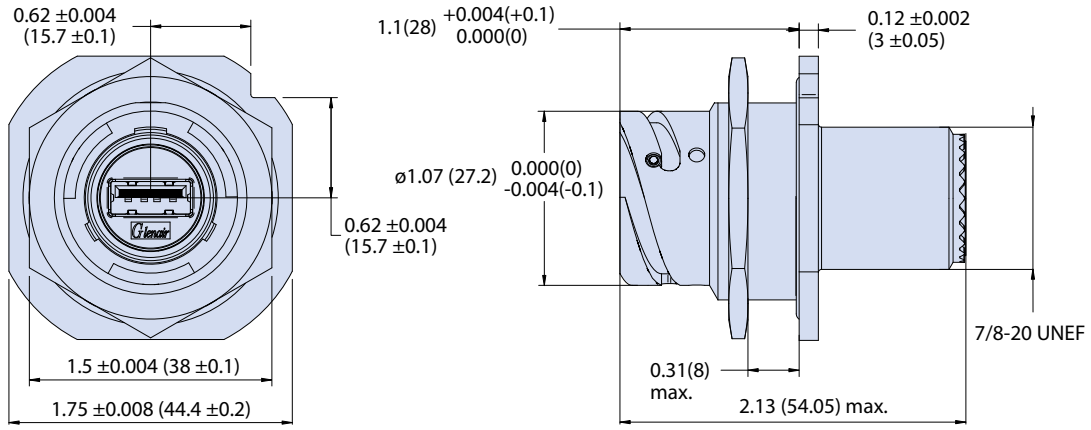

030 - REAR PANEL MOUNT RECEPTACLE WITH ACCESSORY THREADS

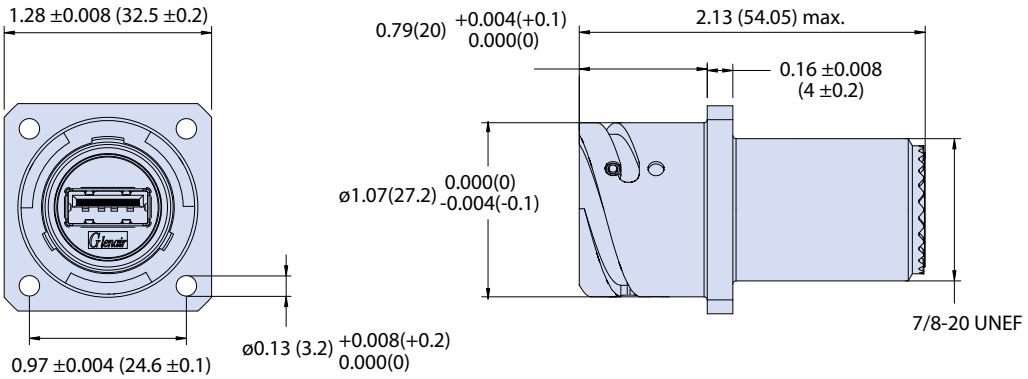

E

© 2016 Glenair, Inc • 1211 Air Way, Glendale, CA 91201 • 818-247-6000 • www.glenair.com • U.S. CAGE code 06324 • SuperSeal™ Catalog
Dimensions in Inches (millimeters) are subject to change without notice.

USB 2.0 TYPE A

Series ITS (5015 type) Reverse-Bayonet

ITS370 Feedthrough Receptacle with USB Female-to-Female Interface



How to Order								
Sample Part Number	**ITS370**	**03PP**	**16**	**2**	**A**	**A**	**H**	**F6**
Basic Number	**ITS370**							
Connector Style[1]	**03PP** = Rear panel mount receptacle bulkhead feed through							
Shell Size	**16**							
USB Performance	**2** = 2.0							
USB Front Interface Type	**A** = Type A							
USB Rear Interface Type	**A** = Type A							
USB Orientation	**H** = Horizontal **V** = Vertical							
Material/Finish	**Omit** for Al/Cadmium, Olive Drab (G3) **F6** = Black Polymer Electrocoat **F7** = Conductive Black Zinc Nickel **F11** = Electroless Nickel							

Recommended Panel Cutout

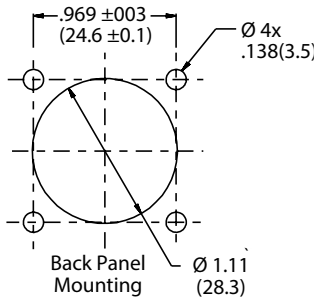

Square Flange Mount
Recommended Mounting Holes
Panel Thickness .315 (8) Max

USB RECEPTACLE ORIENTATION OPTIONS

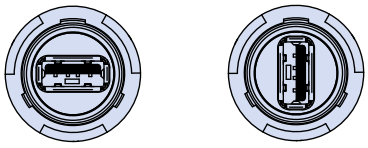

Horizontal Vertical

NOTES

1. See Section A for panel cutout dimensions

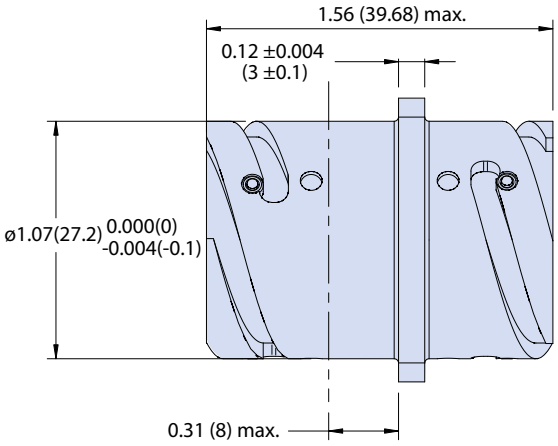

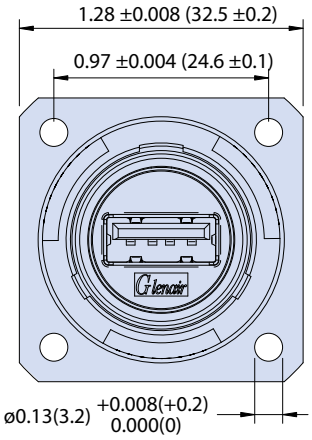

E

© 2016 Glenair, Inc • 1211 Air Way, Glendale, CA 91201 • 818-247-6000 • www.glenair.com • U.S. CAGE code 06324 • SuperSeal™ Catalog
Dimensions in Inches (millimeters) are subject to change without notice.

USB 2.0 TYPE A

Series ITS (5015 type) Reverse-Bayonet

ITS340H Connector and Backshell with Banding Porch and Shrink Boot Groove

Glenair®

How to Order										
Sample Part Number	**ITS340H**	**030**	**16**	**2**	**A**	**A**	**H**	**ZL**	**F6**
Basic Number	**ITS340H**								
Connector Style[1]	**06** = Plug with Accessory Thread **01** = InLine Receptacle with Accessory Thread **070** = Rear Panel Mount Jam Nut Receptacle with Accessory Thread **030** = Rear Panel Mount Square Flange Receptacle with Accessory Thread								
Shell Size	**16**								
USB Performance	**2** = 2.0								
USB Front Interface Type	**A** = Type A								
USB Rear Interface Type	**A** = Type A								
USB Orientation	**H** = Horizontal **V** = Vertical								
Backshell	**ZL** = With banding platform for direct attachment of cable shield and shrink boot								
Material/Finish	**Omit** for Aluminum/Cadmium, Olive Drab (G3) **F6** = Aluminum/Black Polymer Electrocoat **F7** = Aluminum/Conductive Black Zinc Nickel **F11** = Aluminum/Electroless Nickel								

Plug and Receptacle without Pigtail

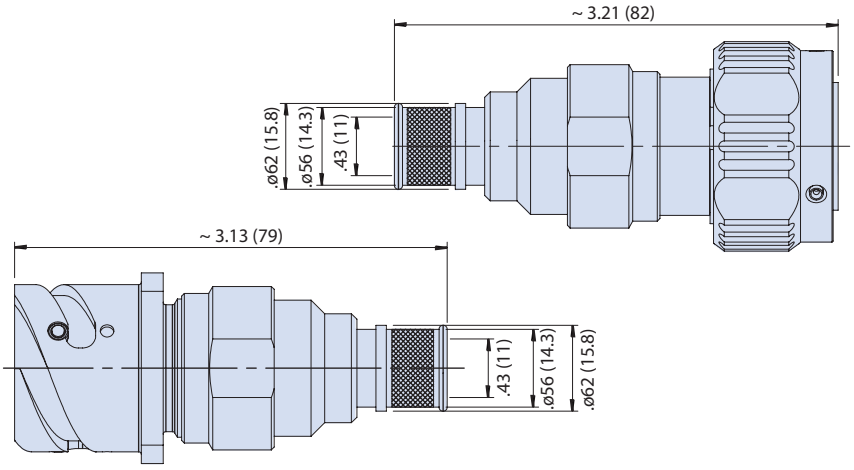

USB Orientation Options

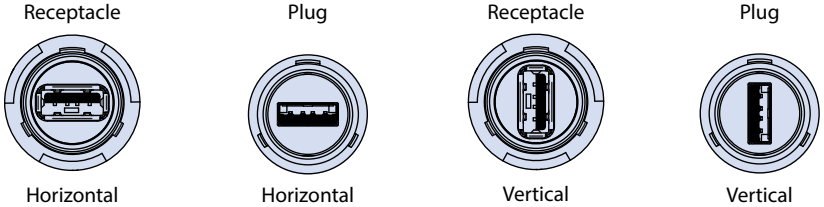

HEAT SHRINK BOOT

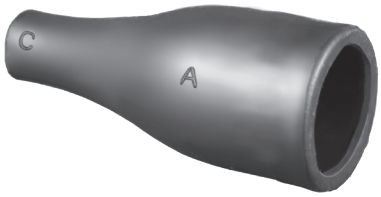

Glenair P/N : **770-004S903W2**

Must be ordered separately

Type 9 flexible polyolefin short profile boots have an operating temperature range of -40°C to 100°C and provide very good resistance to fuels, oils and solvents. These boots fit most standard boot adapters for circular connectors and are specifically designed for low temperature rated CAT5e and USB cables.

NOTES

1. See Section A for panel cutout dimensions and complete finish options

E

© 2016 Glenair, Inc • 1211 Air Way, Glendale, CA 91201 • 818-247-6000 • www.glenair.com • U.S. CAGE code 06324 • SuperSeal™ Catalog
Dimensions in Inches (millimeters) are subject to change without notice.

USB 2.0 TYPE A

Series ITS (5015 type) Reverse-Bayonet

ITS340H Connector and Backshell with Pigtail

Glenair®

How to Order										
Sample Part Number	**ITS340H**	**030**	**16**	**2**	**A**	**A**	**H**	**ZL**	**0.5**	**F6**

Basic Number	**ITS340H**
Connector Style[1]	**030** = Rear Panel Mount Square Flange Receptacle with Accessory Threads **01** = InLine Receptacle with Accessory Threads **070** = Rear Panel Mount Jam Nut Receptacle with Accessory Threads **06** = Straight Plug Connector with Accessory Threads
Shell Size	**16**
USB Performance	**2** = 2.0
USB Front Interface Type	**A** = Type A
USB Rear Interface Type	**A** = Type A
USB Orientation	**H** = Horizontal **V** = Vertical
Backshell	**ZL** = Backshell with banding platform for direct attachment of cable shield and shrink boot pre-installed
Cable Length	**0.5** = 0.5 meter pigtail (20 inches)*; See High Data Rate Cable P/N 963-012
Material/Finish	**Omit** for Aluminum/Cadmium, Olive Drab (G3) **F6** = Aluminum/Black Polymer Electrocoat **F7** = Aluminum/Conductive Black Zinc Nickel **F11** = Aluminum/Electroless Nickel

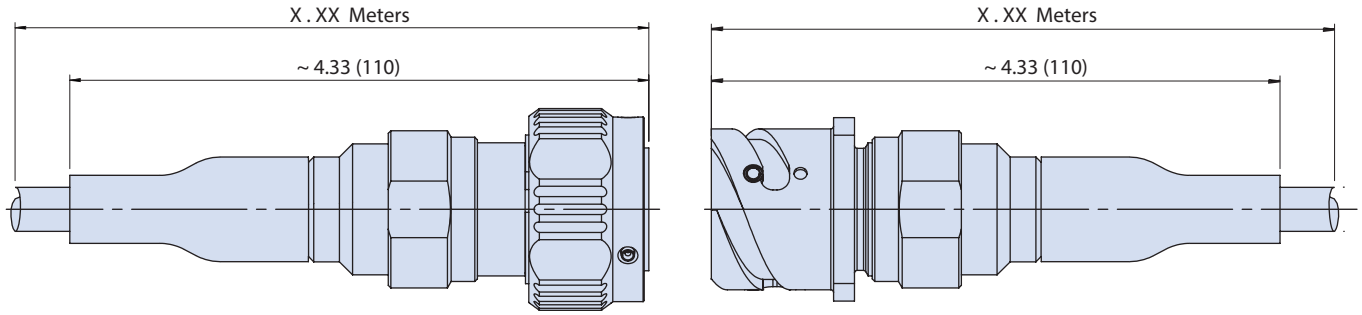

*Cable length to be ordered in 0.5 mt (20 inch) increments

Plug and Receptacle with Pigtail

USB Orientation Options

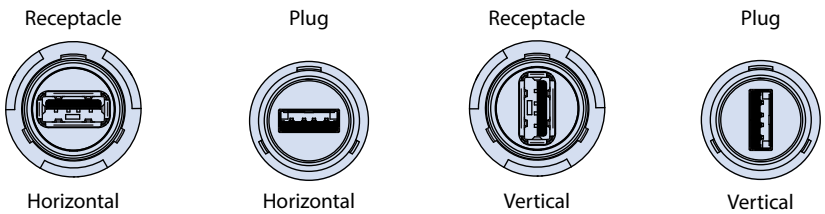

NOTES

1. See Section A for panel cutout dimensions and complete finish options

© 2016 Glenair, Inc • 1211 Air Way, Glendale, CA 91201 • 818-247-6000 • www.glenair.com • U.S. CAGE code 06324 • SuperSeal™ Catalog
Dimensions in Inches (millimeters) are subject to change without notice.

USB 2.0 TYPE A

Series ITS (5015 type) Reverse-Bayonet

ITS340H Connector with Internal Metric Thread Backshell

How to Order										
Sample Part Number	**ITS340H**	**030**	**16**	**2**	**A**	**A**	**H**	**M**	**F6**
Basic Number	**ITS340H**								
Connector Style[1]	**030** = Rear Panel Mount Square Flange Receptacle with Accessory Threads **01** = InLine Receptacle with Accessory Threads **070** = Rear Panel Mount Jam Nut Receptacle with Accessory Threads **06** = Straight Plug Connector with Accessory Threads								
Shell Size	**16**								
USB Performance	**2** = 2.0								
USB Front Interface Type	**A** = Type A								
USB Rear Interface Type	**A** = Type A								
USB Orientation	**H** = Horizontal **V** = Vertical								
Backshell	**M** = Backshell with metric thread								
Material/Finish	**Omit** for Aluminum/Cadmium Olive Drab (G3) **F6** = Aluminum/Black Polymer Electrocoat **F7** = Aluminum/Conductive Black Zinc Nickel **F11** = Aluminum/Electroless Nickel								

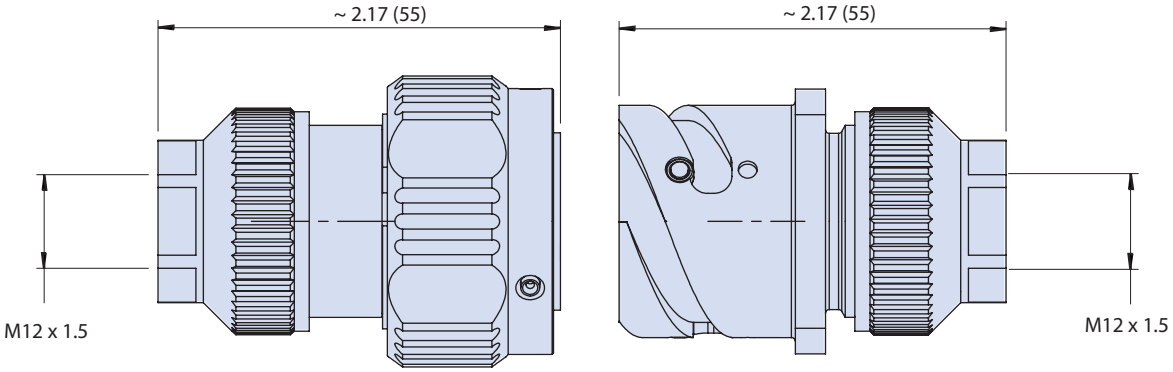

Plug and Receptacle without Cable Gland
(Other Backshells option are available, please consult the factory)

USB Orientation Options

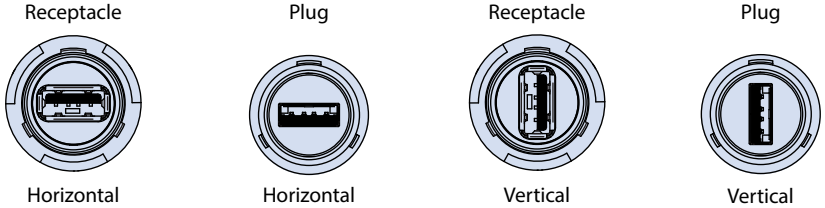

NOTES

1. See Section A for panel cutout dimensions and complete finish options

© 2016 Glenair, Inc • 1211 Air Way, Glendale, CA 91201 • 818-247-6000 • www.glenair.com • U.S. CAGE code 06324 • SuperSeal™ Catalog
Dimensions in Inches (millimeters) are subject to change without notice.

USB 2.0 TYPE A

Series ITS (5015 type) Reverse-Bayonet

ITS340H Connector and Backshell with Metallic Cable Gland, with or without Pigtails

Glenair®

How to Order										
Sample Part Number	**ITS340H**	**030**	**16**	**2**	**A**	**A**	**H**	**MS1**	**0.5**	**F6**

Basic Number	**ITS340H**
Connector Style[1]	**030** = Rear Panel Mount Square Flange Receptacle with Accessory Threads **01** = InLine Receptacle with Accessory Threads **070** = Rear Panel Mount Jam Nut Receptacle with Accessory Threads **06** = Straight Plug Connector with Accessory Threads
Shell Size	**16**
USB Performance	**2** = 2.0
USB Front Interface Type	**A** = Type A
USB Rear Interface Type	**A** = Type A
USB Orientation	**H** = Horizontal **V** = Vertical
Metallic Cable Gland	See Metallic Cable Gland Table
Cable Length	**0.5** = 0.5 mt. (20 inch) pigtail **Omit** for None
Material/Finish	**Omit** for Aluminum/Cadmium, Olive Drab (G3) **F6** = Aluminum/Black Polymer Electrocoat **F7** = Aluminum/Conductive Black Zinc Nickel **F11** = Aluminum/Electroless Nickel

NOTES

1. See Section A for panel cutout dimensions and complete finish options

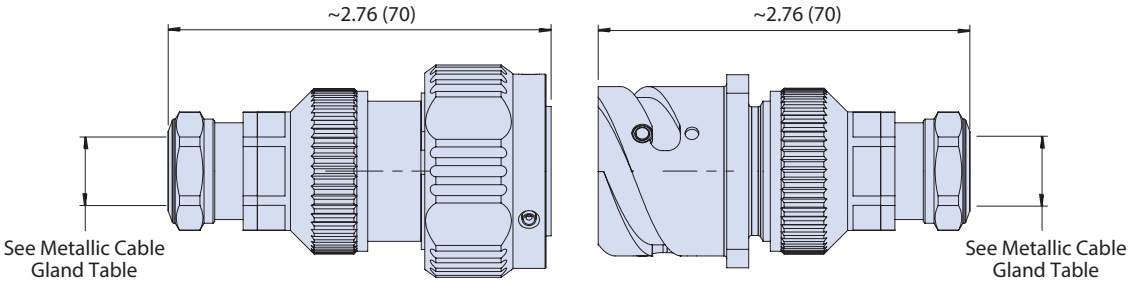

Plug and Receptacle without Pigtail

*Cable length to be ordered in 0.5 mt (20 inch) increments

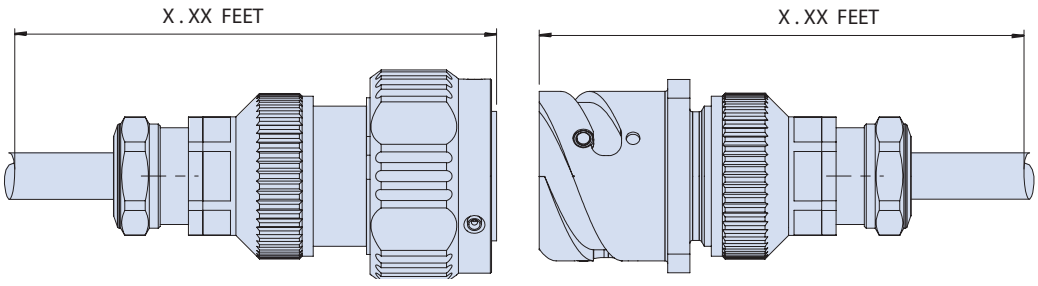

Plug and Receptacle with Pigtail

USB Orientation Options

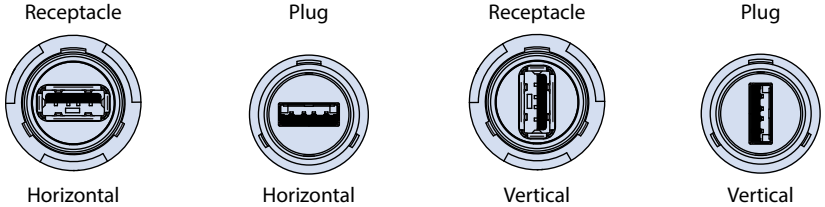

Metallic Cable Gland		
Type	Cable Range	Shield
M1	.13 - .19 (3.5 – 5)	No
M2	.25 - .31 (6.5 - 8)	No
MS1	.17 - .23 (4.5 - 6)	Yes
MS2	.23 - .29 (6 - 7.5)	Yes

E

© 2016 Glenair, Inc • 1211 Air Way, Glendale, CA 91201 • 818-247-6000 • www.glenair.com • U.S. CAGE code 06324 • SuperSeal™ Catalog
Dimensions in Inches (millimeters) are subject to change without notice.

RJ45/USB SUPER SEAL™

RJ45 CAT 5E ETHERNET

Series IPT (26482 Type) Bayonet Coupler

Product Selection Guide

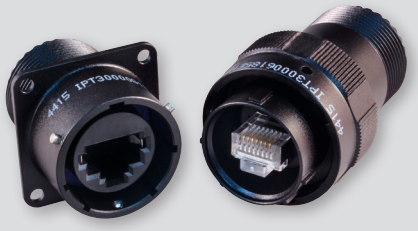

IPT300 Page F-2

SuperSeal™ Coupler with Accessory Threads and RJ45 Plug-to-Jack (Plug) or Jack-to-Jack (Receptacle).



IPT301 Page F-4

SuperSeal™ Connector with Accessory Threads and RJ45 Plug (Plug) or Jack (Receptacle) to Crimp Removable Contacts.

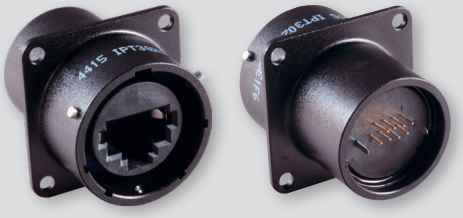

IPT302 Page F-6

SuperSeal™ Receptacle with Jack to PC Tail Termination.

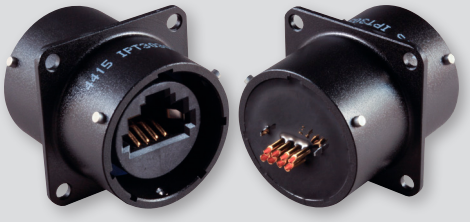

IPT303 Page F-7

SuperSeal™ Receptacle with Jack to Solder Cup Termination.



IPT330 Page F-8

SuperSeal™ Feedthrough Receptacle with Jack-to-Jack RJ45.



IPT300H Page F-9

SuperSeal™ Connector and Backshell Options.

F

© 2016 Glenair, Inc • 1211 Air Way, Glendale, CA 91201 • 818-247-6000 • www.glenair.com • U.S. CAGE code 06324 • SuperSeal® Catalog
Dimensions in Inches (millimeters) are subject to change without notice.

Series IPT (26482 Type) Bayonet Coupler

IPT300 Coupler with Accessory Threads and RJ45 Plug-to-Jack (Plug) or Jack-to-Jack (Receptacle)







How to Order							
Sample Part Number	**IPT300**	**00**	**G**	**18**	**5E**	**1**	**F7**
Basic Number	**IPT300**						
Connector Style[1]	**00** = Front Panel Mount Square Flange Receptacle **01** = In-Line Receptacle **070** = Rear Panel Mounting Jam Nut Receptacle **06** = Straight Plug						
Insert-to-Shell Grounding	**G** = Insert grounded to shell; available for receptacle only (for use with shielded cable) **Omit** = for none						
Shell Size	**18**						
RJ45 Category[2]	**5E** = Cat 5E For Cat 6A applications consult factory						
RJ45 Orientation	**1**,**2**,**3** or **4**						
Material/Finish	**Omit** for Aluminum/Cadmium, Olive Drab (G3) **F6** = Aluminum/Black Polymer Electrocoat **F7** = Aluminum/Conductive Black Zinc Nickel **F11** = Aluminum/Electroless Nickel						

RJ45 Orientation Options

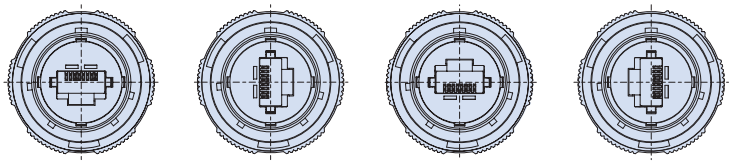

NOTES

1. See Section A for recommended panel cut out dimensions
2. Plugs are plug/jack and receptacles are jack/jack

00 - FRONT PANEL MOUNT SQUARE FLANGE RECEPTACLE WITH ACCESSORY THREADS

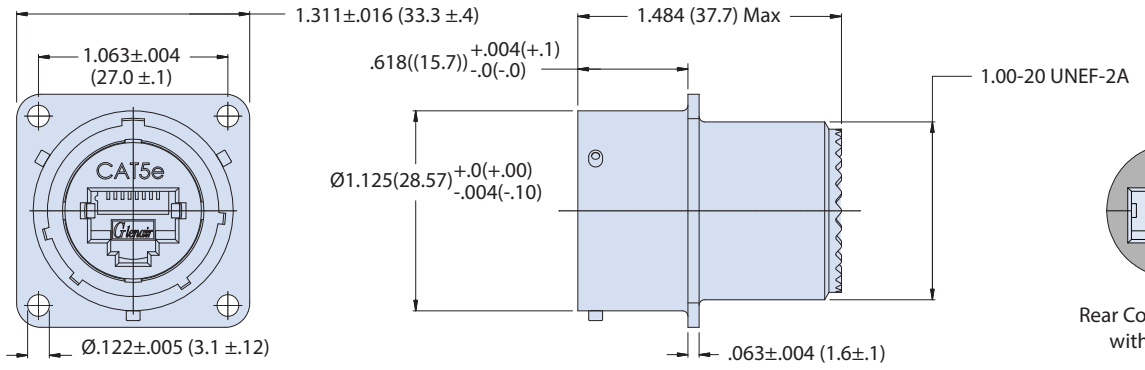

F

© 2016 Glenair, Inc • 1211 Air Way, Glendale, CA 91201 • 818-247-6000 • www.glenair.com • U.S. CAGE code 06324 • SuperSeal™ Catalog
Dimensions in Inches (millimeters) are subject to change without notice.

Series IPT (26482 Type) Bayonet Coupler

IPT300 Coupler with Accessory Threads and RJ45 Plug-to-Jack (Plug) or Jack-to-Jack (Receptacle)

01 - INLINE RECEPTACLE WITH ACCESSORY THREADS

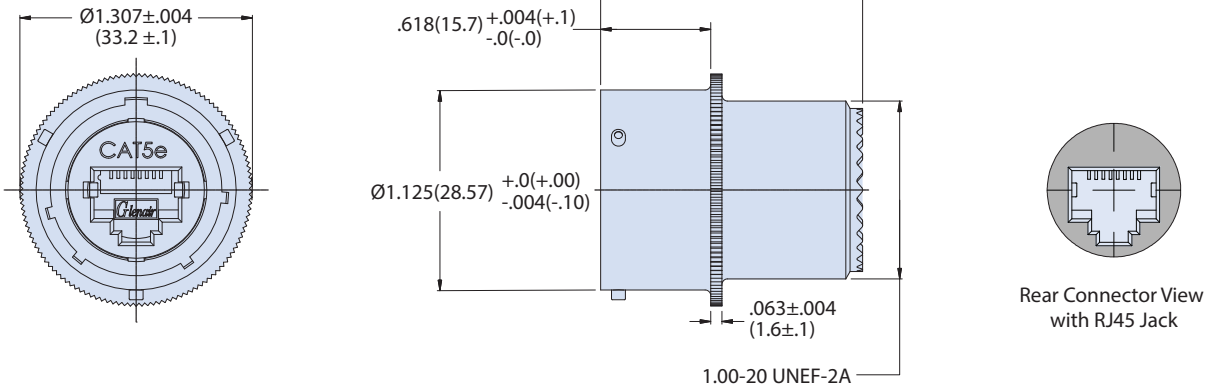

070 - REAR PANEL MOUNT JAM NUT RECEPTACLE WITH ACCESSORY THREADS

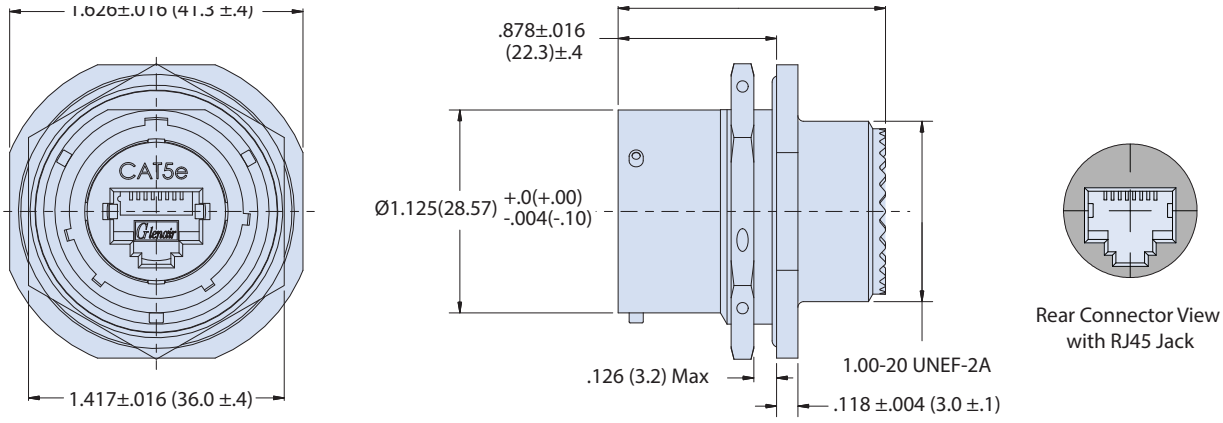

06 - PLUG WITH ACCESSORY THREADS

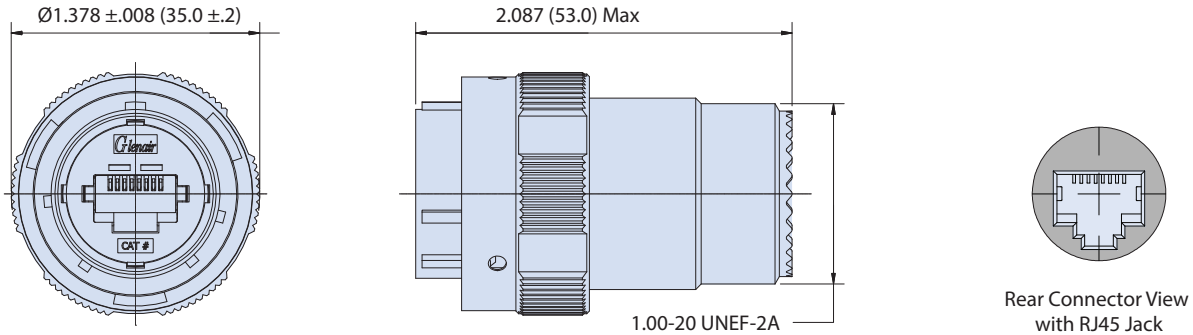

F

© 2016 Glenair, Inc • 1211 Air Way, Glendale, CA 91201 • 818-247-6000 • www.glenair.com • U.S. CAGE code 06324 • SuperSeal™ Catalog
Dimensions in Inches (millimeters) are subject to change without notice.

RJ45 CAT 5E ETHERNET

Series IPT (26482 Type) Bayonet Coupler

IPT301 Connector with Accessory Threads and RJ45 Plug (Plug) or Jack (Receptacle) to Crimp Removable Contacts







How to Order							
Sample Part Number	**IPT301**	**00**	**G**	**18**	**5E**	**1**	**F7**

Basic Number	**IPT301**
Connector Style	**00** = Front Panel Mount Square Flange Receptacle **01** = In-Line Receptacle **070** = Rear Panel Mounting Jam Nut Receptacle **06** = Straight Plug
Insert-to-Shell Grounding	**G** = Insert grounded to shell; available for receptacle only (for use with shielded cable) **Omit** = for none
Shell Size	**18**
RJ45 Category	**5E** = Cat 5E For Cat 6A applications consult factory
RJ45 Orientation	**1**,**2**,**3** or **4**
Material/Finish	**Omit** for Aluminum/Cadmium, Olive Drab (G3) **F6** = Aluminum/Black Polymer Electrocoat **F7** = Aluminum/Conductive Black Zinc Nickel **F11** = Aluminum/Electroless Nickel

RJ45 Orientation Options

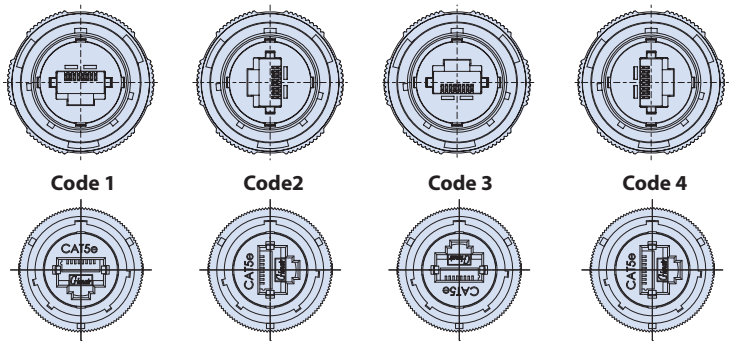

NOTES

1. See Section A for recommended panel cut out dimensions

06 - PLUG WITH ACCESSORY THREADS

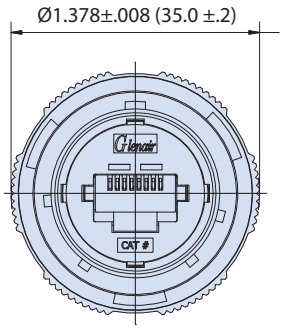

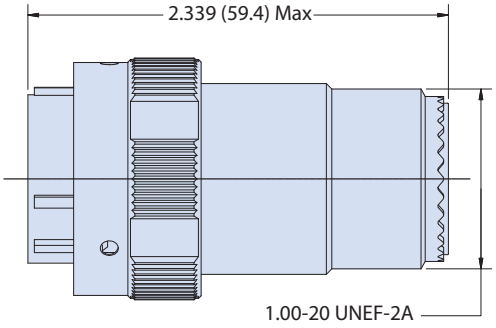

Crimp Layout

(Code 1 Orientation Shown)

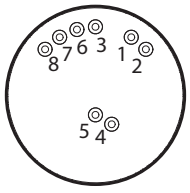

F

© 2016 Glenair, Inc • 1211 Air Way, Glendale, CA 91201 • 818-247-6000 • www.glenair.com • U.S. CAGE code 06324 • SuperSeal™ Catalog
Dimensions in Inches (millimeters) are subject to change without notice.

Series IPT (26482 Type) Bayonet Coupler

IPT301 Connector with Accessory Threads and RJ45 Plug (Plug) or Jack (Receptacle) to Crimp Removable Contacts

01 - INLINE RECEPTACLE WITH ACCESSORY THREADS

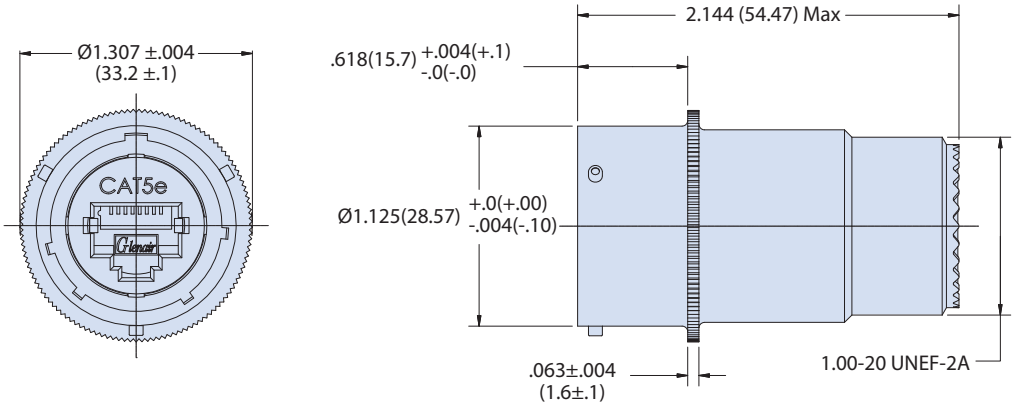

070 - REAR PANEL MOUNTING JAM NUT RECEPTACLE WITH ACCESSORY THREADS

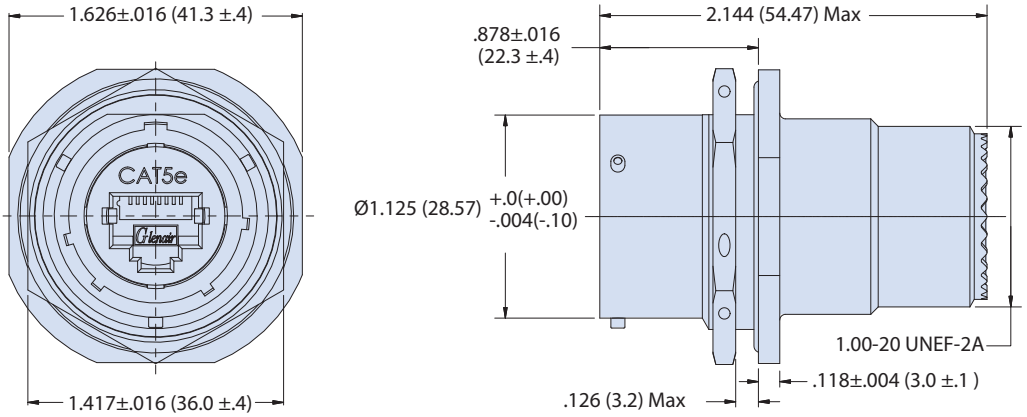

00 - FRONT PANEL MOUNT SQUARE FLANGE RECEPTACLE WITH ACCESSORY THREADS

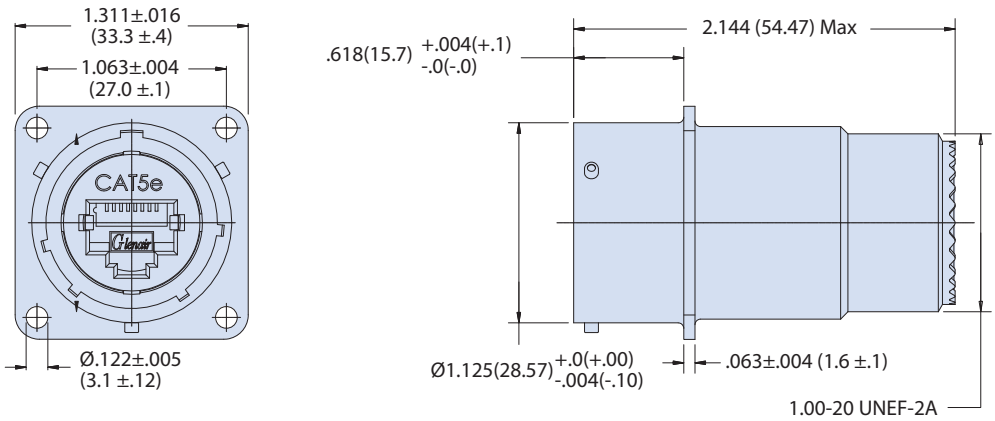

F

© 2016 Glenair, Inc • 1211 Air Way, Glendale, CA 91201 • 818-247-6000 • www.glenair.com • U.S. CAGE code 06324 • SuperSeal™ Catalog
Dimensions in Inches (millimeters) are subject to change without notice.

RJ45 CAT 5E ETHERNET

Series IPT (26482 Type) Bayonet Coupler

IPT302 Receptacle with Jack to PC Tail Termination



How to Order							
Sample Part Number	**IPT302**	**02**	**G**	**18**	**5E**	**1**	**F7**

Basic Number	**IPT302**
Connector Style[1]	**02** = Front panel Mount Square Flange Receptacle **07** = Rear Panel Mount Jam Nut Receptacle
Insert-to-Shell Grounding	**G** = Insert grounded to shell **Omit** for none (for use with shielded cable) (Use only with G3, F11 or F7 finish)
Shell Size	**18**
RJ45 Category[2]	**5E** = Cat 5E For Cat 6A applications consult factory
RJ45 Orientation	**1**,**2**,**3** or **4**
Material/Finish	**Omit** for Aluminum/Cadmium, Olive Drab (G3) **F6** = Aluminum/Black Polymer Electrocoat **F7** = Aluminum/Conductive Black Zinc Nickel **F11** = Aluminum/Electroless Nickel

RJ45 Receptacle, Orientation Options

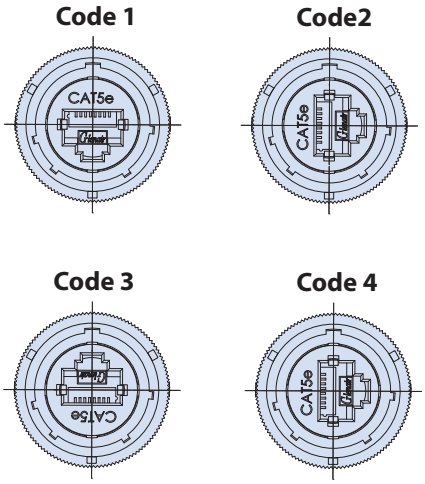

PC tail layout

(Code 1 Orientation Shown)

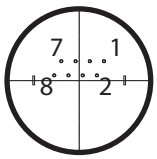

NOTES

1. See Section A for recommended panel cut out dimensions

02 - FRONT PANEL MOUNT SQUARE FLANGE RECEPTACLE

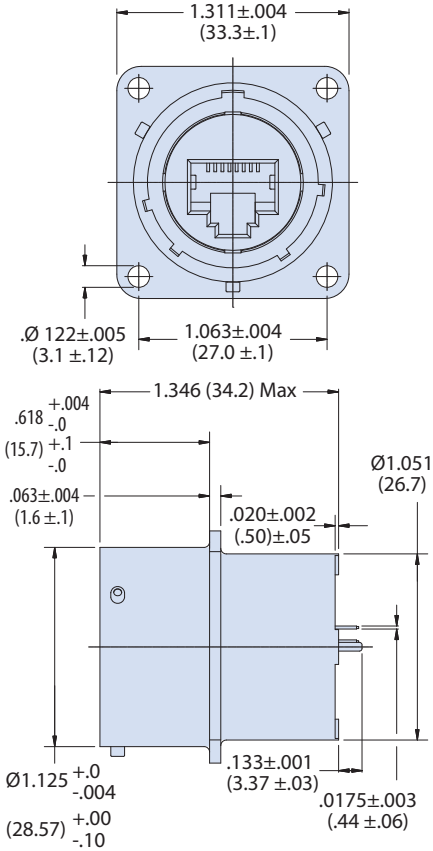

07 - REAR PANEL MOUNTING JAM NUT RECEPTACLE

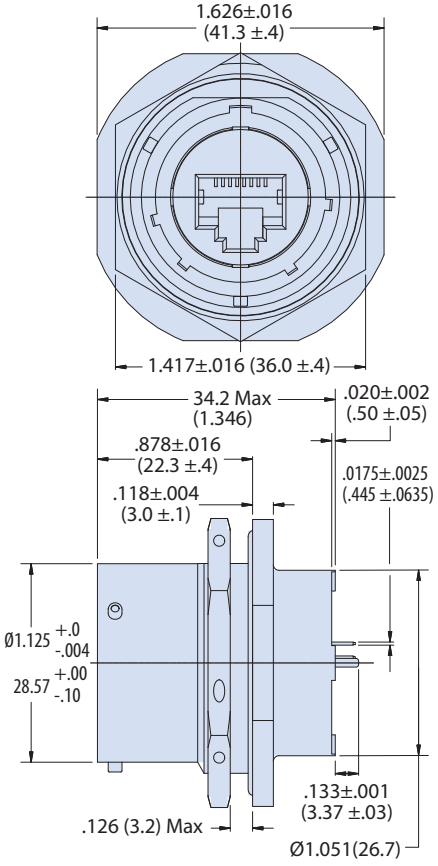

F

© 2016 Glenair, Inc • 1211 Air Way, Glendale, CA 91201 • 818-247-6000 • www.glenair.com • U.S. CAGE code 06324 • SuperSeal™ Catalog
Dimensions in Inches (millimeters) are subject to change without notice.

RJ45/USB SUPER SEAL™

RJ45 CAT 5E ETHERNET

Series IPT (26482 Type) Bayonet Coupler

IPT303 Receptacle with Jack to Solder Cup Termination

Glenair®



How to Order								
Sample Part Number	**IPT303**	**02**	**G**	**18**	**5E**	**1**	**F7**	
Basic Number	**IPT303**							
Connector Style[1]	**02** = Front Panel Square Flange Mount Receptacle **07** = Rear Panel Mount Jam Nut Receptacle							
Insert-to-Shell Grounding	**G** = Insert grounded to shell (for use with shielded cable) (Use only with G3, F11 or F7 finish) **Omit** for none							
Shell Size	**18**							
RJ45 Category[2]	**5E** = Cat 5E For Cat 6A applications consult factory							
RJ45 Orientation	**1**,**2**,**3** or **4**							
Material/Finish	**Omit** for Aluminum/Cadmium, Olive Drab (G3) **F6** = Aluminum/Black Polymer Electrocoat **F7** = Aluminum/Conductive Black Zinc Nickel **F11** = Aluminum/Electroless Nickel							

RJ45 Receptacle, Orientation Options

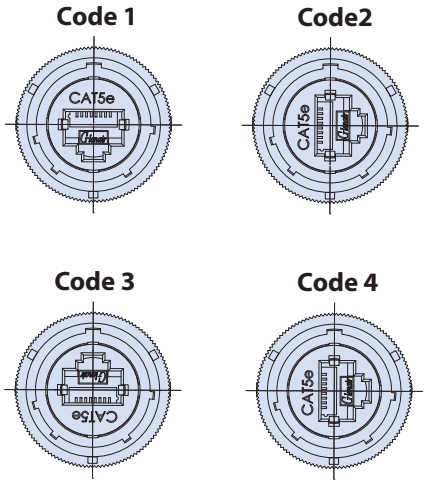

Solder cup layout

(Code 1 Orientation Shown)

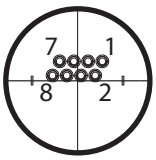

NOTES

1. See Section A for recommended panel cut out dimensions and solder cup layout

02 - FRONT PANEL MOUNT SQUARE FLANGE RECEPTACLE

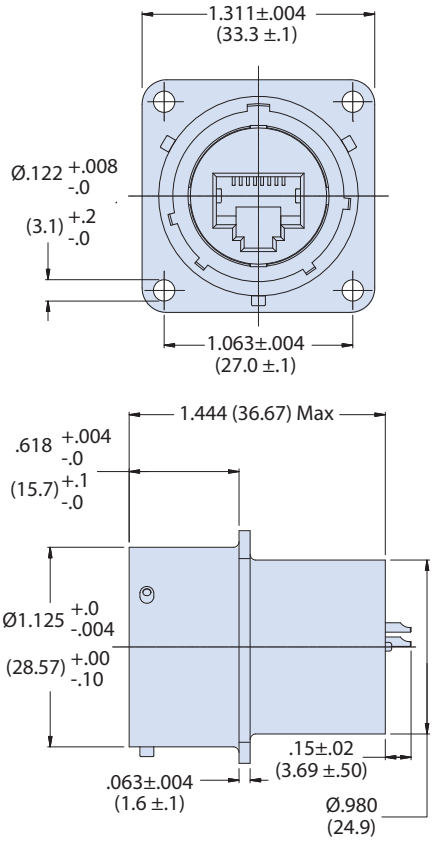

07 - REAR PANEL MOUNTING JAM NUT RECEPTACLE

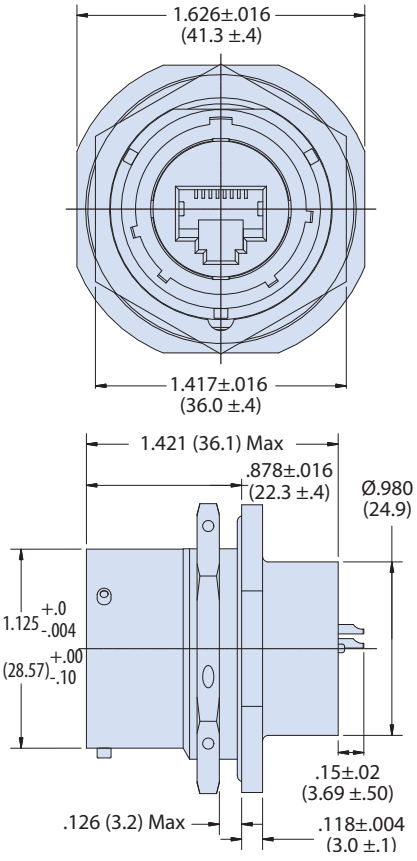

F

© 2016 Glenair, Inc • 1211 Air Way, Glendale, CA 91201 • 818-247-6000 • www.glenair.com • U.S. CAGE code 06324 • SuperSeal™ Catalog
Dimensions in Inches (millimeters) are subject to change without notice.

Series IPT (26482 Type) Bayonet Coupler

IPT330 Feedthrough Receptacle with Jack-to-Jack RJ45



How to Order						
Sample Part Number	**IPT330**	**02PP**	**18**	**5E**	**1**	**F7**
Basic Number	**IPT330**					
Connector Style[1]	**02PP** = Front Panel Mount Square Flange receptacle					
Shell Size	**18**					
RJ45 Category[2]	**5E** = Cat 5E For Cat 6A applications consult factory					
RJ45 Orientation	**1**,**2**,**3** or **4**					
Material/Finish	**Omit** for Aluminum/Cadmium, Olive Drab (G3) **F6** = Aluminum/Black Polymer Electrocoat **F7** = Aluminum/Conductive Black Zinc Nickel **F11** = Aluminum/Electroless Nickel					

NOTES

1. See Section A for recommended panel cut out dimensions
2. Feedthrough is jack/jack layout

RJ45 Orientation, Receptacle Options

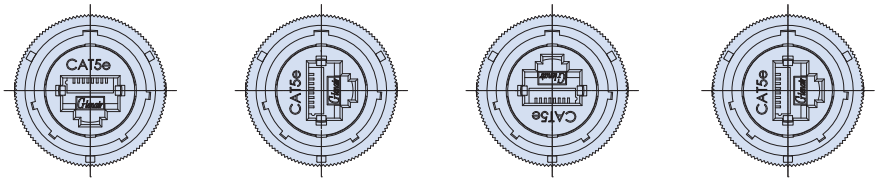

Code 1 Code2 Code 3 Code 4

02 - FRONT PANEL SQUARE FLANGE MOUNT RECEPTACLE

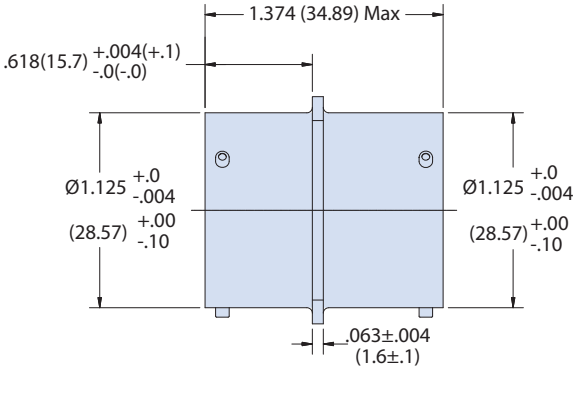

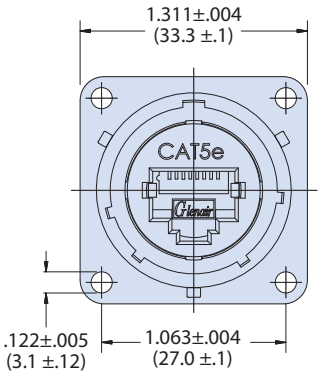

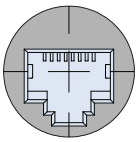

Rear Connector View with RJ45 Jack

F

© 2016 Glenair, Inc • 1211 Air Way, Glendale, CA 91201 • 818-247-6000 • www.glenair.com • U.S. CAGE code 06324 • SuperSeal™ Catalog
Dimensions in Inches (millimeters) are subject to change without notice.

Series IPT (26482 Type) Bayonet Coupler

IPT300H Connector and Backshell with Banding Porch and Boot Groove

How to Order									
Sample Part Number	**IPT300H**	**00**	**G**	**18**	**5E**	**1**	**ZL**	**F7**	
Basic Number	**IPT300H**								
Connector Style[1]	**00** = Front Panel Mount Square Flange Receptacle **01** = In-Line Receptacle **070** = Rear Panel Mount Jam Nut Receptacle **06** = Straight Plug								
Insert-to-Shell Grounding	**G** = Insert grounded to shell; available for receptacle only and for use with shielded cable **Omit** = for none								
Shell Size	**18**								
RJ45 Category	**5E** = Cat 5E (For Cat 6A applications consult factory)								
RJ45 Orientation	**1**,**2**,**3** or **4**								
Backshell	**ZL** = Backshell with Banding Porch and Boot Groove								
Material/Finish	**Omit** for Aluminum/Cadmium, Olive Drab (G3) **F6** = Aluminum/Black Polymer Electrocoat **F7** = Aluminum/Conductive Black Zinc Nickel **F11** = Aluminum/Electroless Nickel								





RJ45 Orientation Options

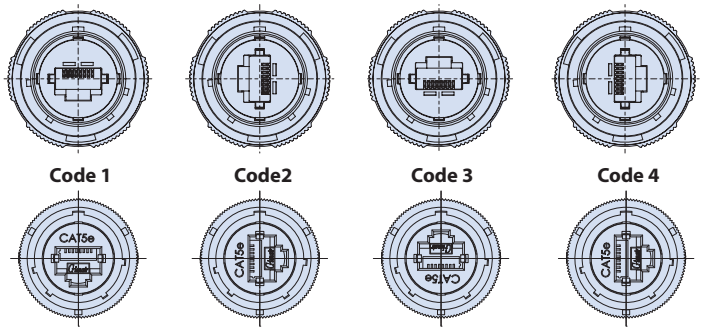

HEAT SHRINK BOOT

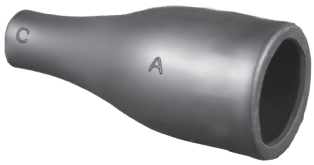

Glenair P/N : **770-004S903W2**

Must be ordered separately

Type 9 flexible polyolefin short profile boots have an operating temperature range of -40°C to 100°C and provide very good resistance to fuels, oils and solvents. These boots fit most standard boot adapters for circular connectors and are specifically designed for low temperature rated CAT5e and USB cables.

NOTES

1. See Section A for recommended panel cut out dimensions

CONNECTOR AND BACKSHELL WITH INTEGRAL BANDING PORCH AND BOOT GROOVE

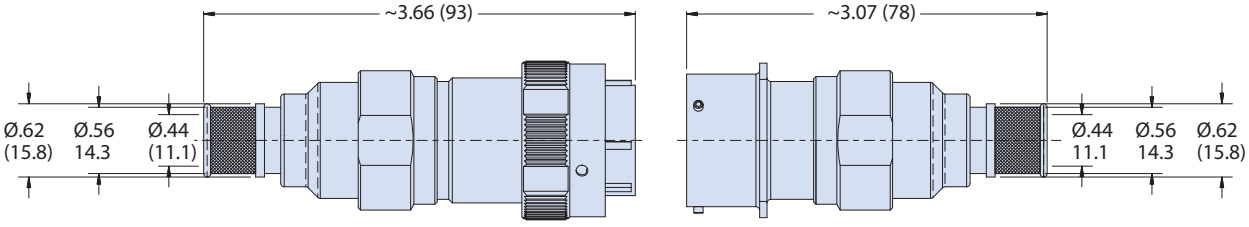

F

© 2016 Glenair, Inc • 1211 Air Way, Glendale, CA 91201 • 818-247-6000 • www.glenair.com • U.S. CAGE code 06324 • SuperSeal™ Catalog
Dimensions in Inches (millimeters) are subject to change without notice.

RJ45/USB SUPER SEAL™

RJ45 CAT 5E ETHERNET

Series IPT (26482 Type) Bayonet Coupler

Glenair®

IPT300H Connector and Backshell with Cable Shield Terminated Pigtail and Fitted Shrink Boot

How to Order											
Sample Part Number	**IPT300H**	**00**	**G**	**18**	**5E**	**1**	**T**	**ZL**	**1**	**F7**

Basic Number	**IPT300H**
Connector Style[1]	**00** = Front Panel Mount Square Flange Receptacle with Accessory Threads **01** = In-Line Receptacle **070** = Rear Panel Mount Jam Nut Receptacle with Accessory Threads **06** = Straight Plug
Insert-to-Shell Grounding	**G** = Insert grounded to shell; available for receptacle only and for use with shielded cable **Omit** = for none
Shell Size	**18**
RJ45 Category	**5E** = Cat 5E For Cat 6A applications consult factory
RJ45 Orientation	**1**,**2**,**3** or **4**
Shrink Boot	**T** = Shrink Boot **Omit** for none
Backshell	**ZL** = Backshell with Banding Porch and Boot Groove
Cable Length	**.5** meter; order in .5 meter increments (approximately 20 inches)
Material/Finish	**Omit** for Aluminum/Cadmium, Olive Drab (G3) **F6** = Aluminum/Black Polymer Electrocoat **F7** = Aluminum/Conductive Black Zinc Nickel **F11** = Aluminum/Electroless Nickel



RJ45 Orientation Options

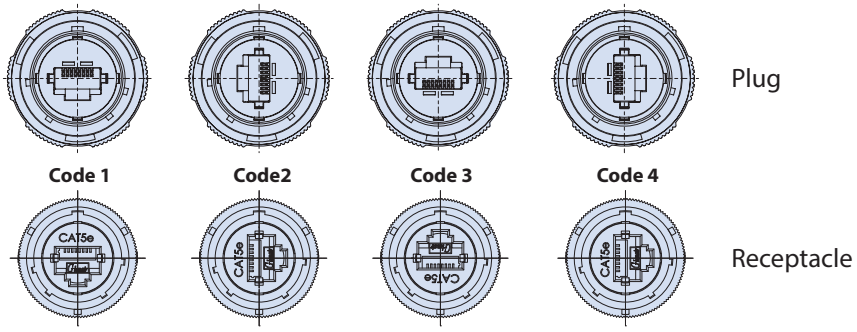

NOTES

1. See Section A recommended panel cut out dimensions

06 - PLUG

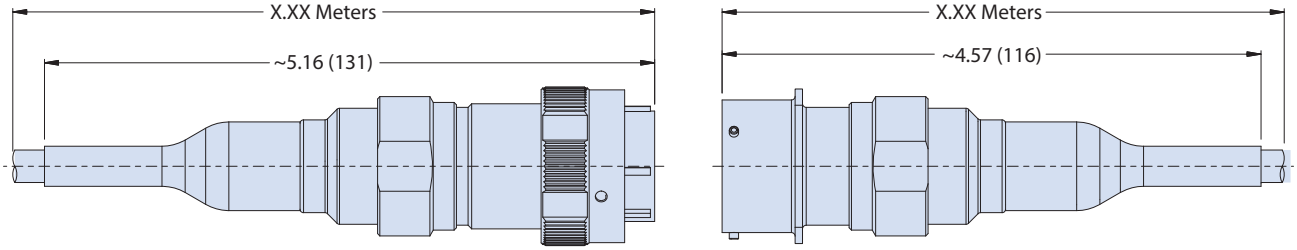

Cable to be ordered in 0.5 meter increments

© 2016 Glenair, Inc • 1211 Air Way, Glendale, CA 91201 • 818-247-6000 • www.glenair.com • U.S. CAGE code 06324 • SuperSeal™ Catalog
Dimensions in Inches (millimeters) are subject to change without notice.

Series IPT (26482 Type) Bayonet Coupler

IPT300H Connector and Backshell with Internal Metric Thread or PG9 Thread

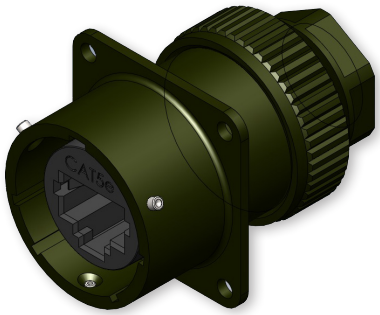

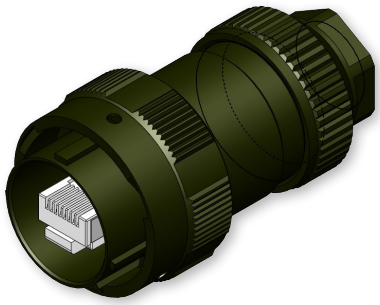

How to Order								
Sample Part Number	**IPT300H**	**00**	**G**	**18**	**5E**	**1**	**M**	**F7**

Basic Number	**IPT300H**
Connector Style[1]	**00** = Front Panel Mount Square Flange Receptacle with Accessory Threads **01** = In-Line Receptacle **070** = Rear Panel Mount Jam Nut Receptacle with Accessory Threads **06** = Straight Plug
Insert-to-Shell Grounding	**G** = Insert grounded to shell; available for receptacle only and for use with shielded cable **Omit** = for none
Shell Size	**18**
RJ45 Category	**5E** = Cat 5E For Cat 6A applications consult factory
RJ45 Orientation	**1**,**2**,**3** or **4**
Backshell	**M** = M16 x 1.5 Internal Thread **PG9** = PG9 Internal Thread
Material/Finish	**Omit** for Aluminum/Cadmium, Olive Drab (G3) **F6** = Aluminum/Black Polymer Electrocoat **F7** = Aluminum/Conductive Black Zinc Nickel **F11** = Aluminum/Electroless Nickel

RJ45 Orientation Options

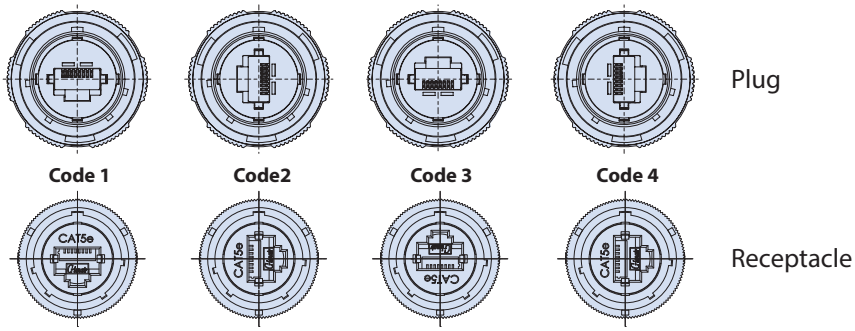

NOTES

1. See Section A for recommended panel cut out dimensions

CONNECTOR AND BACKSHELL WITH M16 X 1.5 OR PG9 INTERNAL THREAD

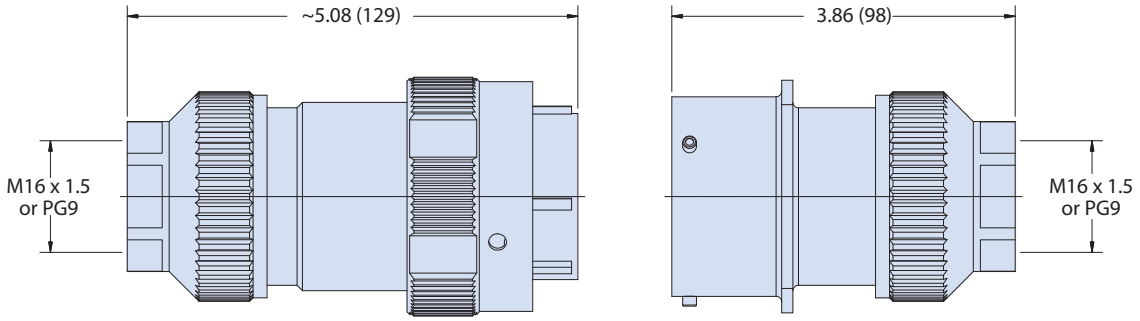

F

© 2016 Glenair, Inc • 1211 Air Way, Glendale, CA 91201 • 818-247-6000 • www.glenair.com • U.S. CAGE code 06324 • SuperSeal™ Catalog
Dimensions in Inches (millimeters) are subject to change without notice.

Series IPT (26482 Type) Bayonet Coupler

IPT300H Connector and Backshell with Cable Gland and Optional Pigtail





How to Order									
Sample Part Number	**IPT300H**	**00**	**G**	**18**	**5E**	**1**	**M**	**0.5**	**F7**
Basic Number	**IPT300H**								
Connector Style[1]	**00** = Front Panel Mount Square Flange Receptacle with Accessory Threads **01** = In-Line Receptacle **070** = Rear Panel Mounting Jam Nut Receptacle **06** = Straight Plug								
Insert-to-Shell Grounding	**G** = Insert grounded to shell; available for receptacle only; for use with shielded cable **Omit** = for none								
Shell Size	**18**								
RJ45 Category	**5E** = Cat 5E For Cat 6A applications consult factory								
RJ45 Orientation	**1**, **2**, **3** or **4**								
Metallic Cable Gland	**M1**, **M2**, **MS1**, **MS2** (see metallic cable gland table)								
Cable Length	**0.5** = 0.5 meter increments; I.E. 1.5 = 1.5 meters								
Material/Finish	**Omit** for Aluminum/Cadmium, Olive Drab (G3) **F6** = Aluminum/Black Polymer Electrocoat **F7** = Aluminum/Conductive Black Zinc Nickel **F11** = Aluminum/Electroless Nickel								

RJ45 Orientation Options

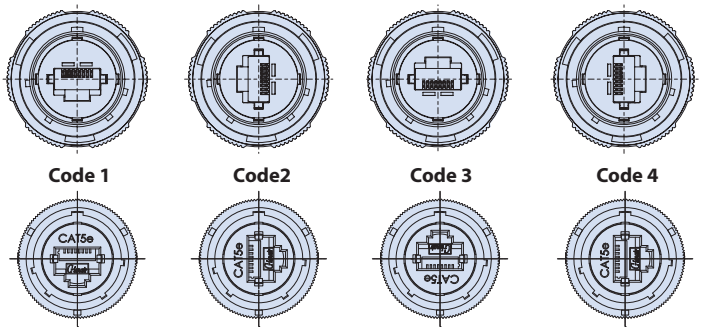

Metallic Cable Gland		
Type	**Cable Range**	**Shield**
M1	.236 - .315 (6 - 8 mm)	No
M2	.315 - .394 (8 - 10)	No
MS1	.236 - .315 (6 - 8 mm)	Yes
MS2	.315 - .394 (8 - 10)	Yes

NOTES

1. See Section A for recommended panel cut out dimensions

F

© 2016 Glenair, Inc • 1211 Air Way, Glendale, CA 91201 • 818-247-6000 • www.glenair.com • U.S. CAGE code 06324 • SuperSeal™ Catalog
Dimensions in Inches (millimeters) are subject to change without notice.

PLUG AND RECEPTACLE WITHOUT PIGTAIL

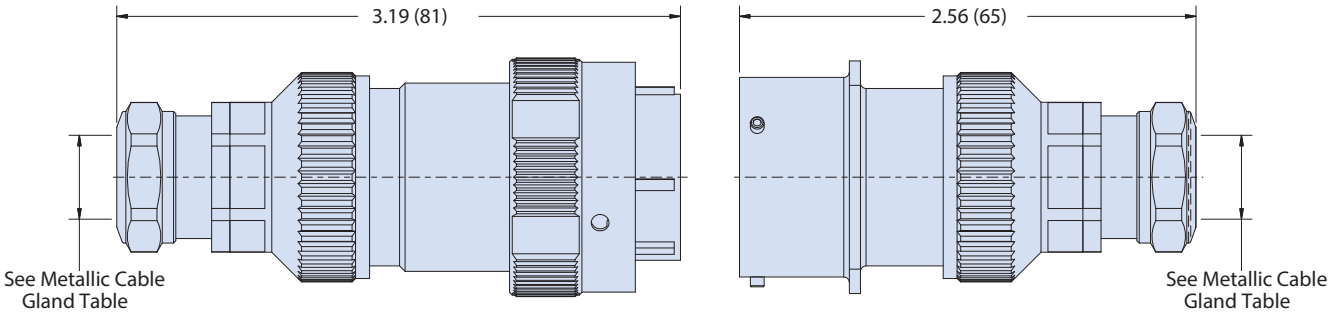

PLUG AND RECEPTACLE WITH PIGTAIL

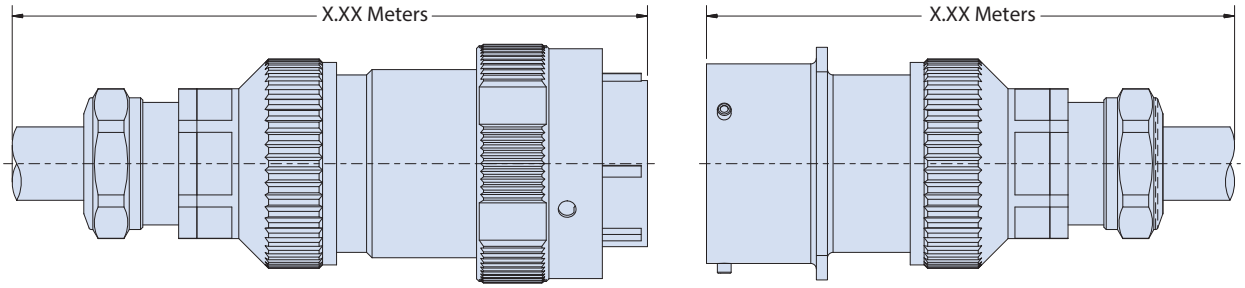

Cable to be ordered in 0.5 meter increments

F

SERIES IPT
FIELD-READY
USB 2.0

SUPERSEAL™



Rugged environmental Series IPT bayonet connectors with IP67 sealing, robust shielding, and a complete range of wire, cable, and circuit board terminations.



Series IPT SuperSeal™ Advantages

- **26482 Type bayonet connectors for mil-aero applications**
- **Superior sealing—IP67 open face and IP68 mated — for complete system protection against water, sand and dust**
- **Highly durable USB design, including enhanced operating temperature, increased life-cycle, and rugged vibration and shock performance**
- **Crimp, solder-cup, PC-tail, and wire termination options**
- **USB 2.0 plug and receptacle versions**
- **Available backshells provide strain-relief and environmental protection**

Glenair®

Glenair, Inc.
1211 Air Way
Glendale, CA 91201-2497
818-247-6000
sales@glenair.com
www.glenair.com

USB 2.0 TYPE A

Series IPT (26482 Type) Bayonet Coupler

Product Selection Guide



IPT340 Page G-2

SuperSeal™ Coupler with Accessory Threads and USB Male-to-Female (Plug) or Female-to-Female (Receptacle) Interface.



IPT342 Page G-4

SuperSeal™ Receptacle with USB Female Interface to PC Tail Termination.



IPT343 Page G-6

SuperSeal™ Receptacle with USB Female Interface to Solder Cup Termination.



IPT345 Page G-8

SuperSeal™ Connectors with Accessory Threads and USB Male (Plug) or Female (Receptacle) Interface to Crimp Removable Contacts.



IPT370 Page G-10

SuperSeal™ Feedthrough Receptacle with USB Female-to-Female Interface.



IPT340H Page G-11

SuperSeal™ USB Connector and Backshell with Accessory Options.

© 2016 Glenair, Inc • 1211 Air Way, Glendale, CA 91201 • 818-247-6000 • www.glenair.com • U.S. CAGE code 06324 • SuperSeal® Catalog
Dimensions in Inches (millimeters) are subject to change without notice.

USB 2.0 TYPE A

Series IPT (26482 Type) Bayonet Coupler

IPT340 Coupler with Accessory Threads and USB Male-to-Female (Plug) or Female-to-Female (Receptacle)









How to Order							
Sample Part Number	**IPT340**	**00**	**16**	**2**	**A**	**H**	**F6**

Basic Number	**IPT340**
Connector Style[1]	**06** = Plug **01** = In-Line Receptacle **070** = Rear Panel Mount Jam Nut Receptacle **00** = Wall Mount Receptacle
Shell Size	**16**
USB Performance	**2** = 2.0
USB Type	**A** = Type A
Orientation Option	**H** = Horizontal **V** = Vertical
Material/Finish	**Omit** for Aluminum/Cadmium, Olive Drab **F6** = Black Polymer Electrocoat **F7** = Conductive Black Zinc Nickel **F11** = Electroless Nickel

USB Orientation Options

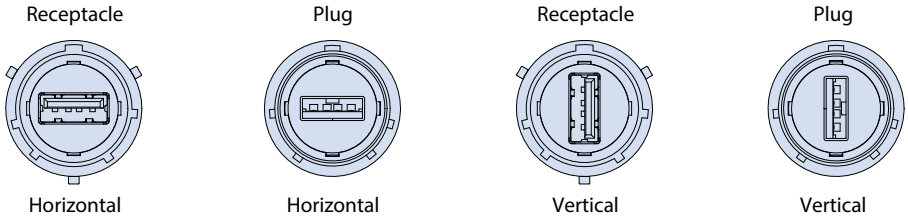

06 - PLUG WITH ACCESSORY THREADS

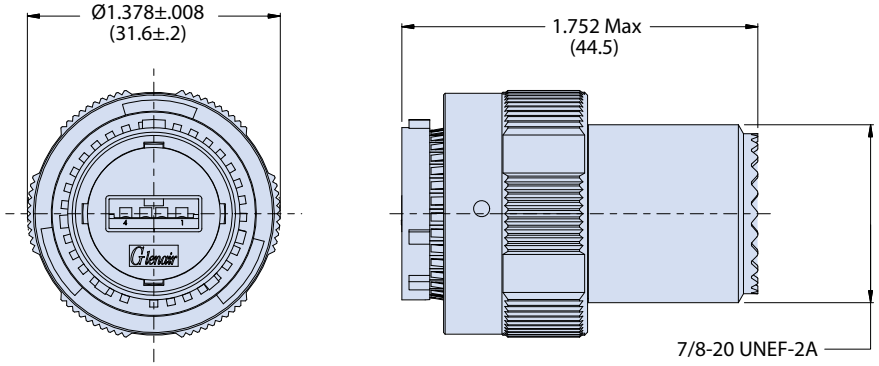

NOTES

1. See Section A panel cutout dimensions

© 2016 Glenair, Inc • 1211 Air Way, Glendale, CA 91201 • 818-247-6000 • www.glenair.com • U.S. CAGE code 06324 • SuperSeal® Catalog
Dimensions in Inches (millimeters) are subject to change without notice.

01 - INLINE RECEPTACLE WITH ACCESSORY THREADS

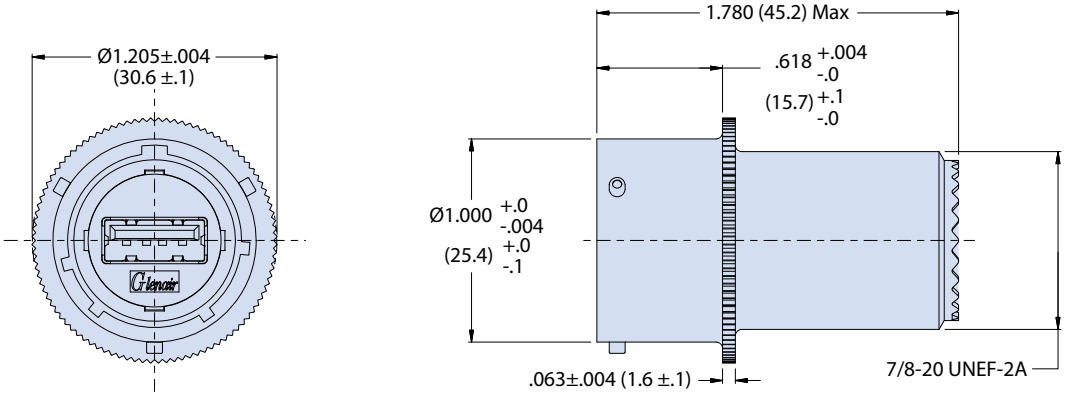

070 - REAR PANEL MOUNT JAM NUT RECEPTACLE WITH ACCESSORY THREADS

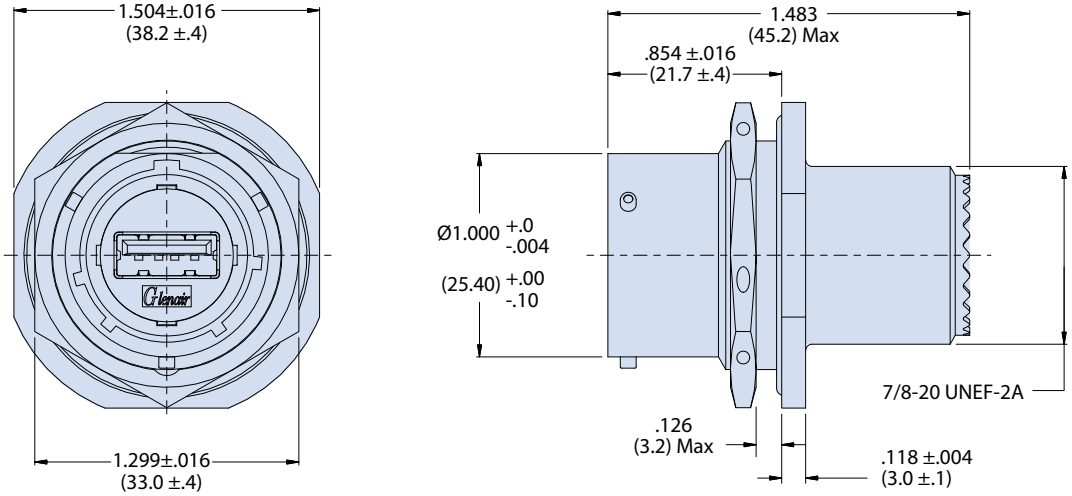

00 - WALL MOUNT RECEPTACLE WITH ACCESSORY THREADS

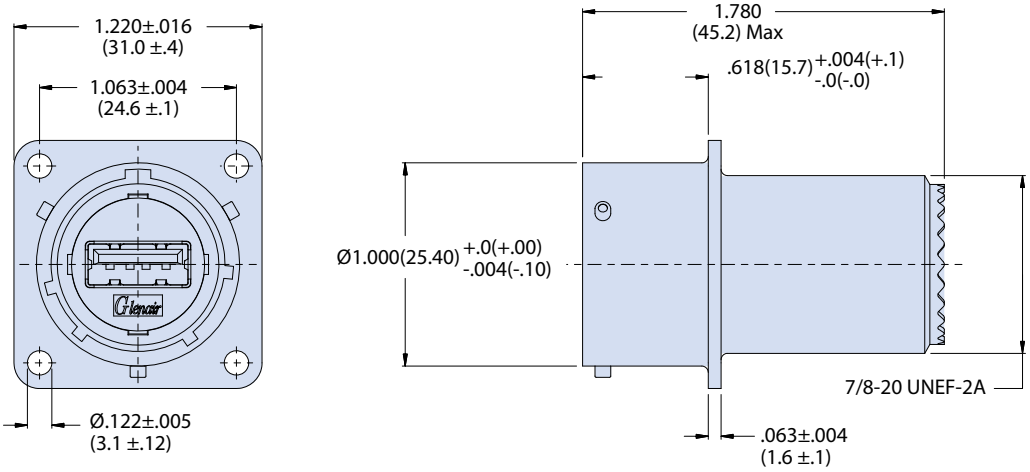

© 2016 Glenair, Inc • 1211 Air Way, Glendale, CA 91201 • 818-247-6000 • www.glenair.com • U.S. CAGE code 06324 • SuperSeal® Catalog
Dimensions in Inches (millimeters) are subject to change without notice.

RJ45/USB SUPER SEAL™

USB 2.0 TYPE A

Series IPT (26482 Type) Bayonet Coupler

IPT342 Receptacle with USB Female Interface to PC Tail Termination

Glenair®









How to Order							
Sample Part Number	**IPT342**	**02**	**16**	**2**	**A**	**H**	**F6**

Basic Number	**IPT342**
Connector Style[1]	**02** = Wall Mount Receptacle **07** = Rear Panel Mount Jam Nut Receptacle
Shell Size	**16**
USB Performance	**2** = 2.0
USB Type	**A** = Type A
Orientation Option	**H** = Horizontal **V** = Vertical
Material/Finish	**Omit** for Cadmium/Olive Drab **F6** = Black Polymer Electrocoat **F7** = Conductive Black Zinc Nickel **F11** = Electroless Nickel

USB Orientation Options

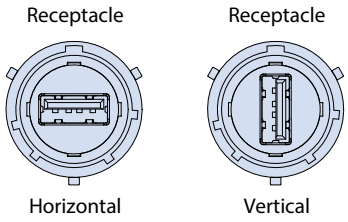

RECOMMENDED PCB LAYOUT

Receptacle USB 2.0 / Type A (Horizontal Orientation)

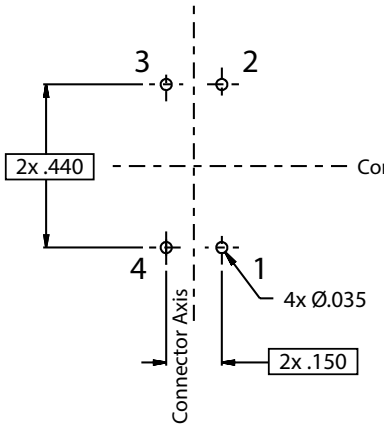

Recommended (Solder Side)

Receptacle USB 2.0 / Type A (Vertical Orientation)

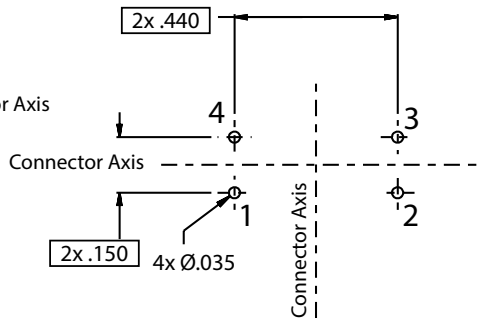

Recommended (Solder Side)

NOTES

1. See Section A for panel cutout dimensions

© 2016 Glenair, Inc • 1211 Air Way, Glendale, CA 91201 • 818-247-6000 • www.glenair.com • U.S. CAGE code 06324 • SuperSeal® Catalog
Dimensions in Inches (millimeters) are subject to change without notice.

02 - WALL MOUNT RECEPTACLE

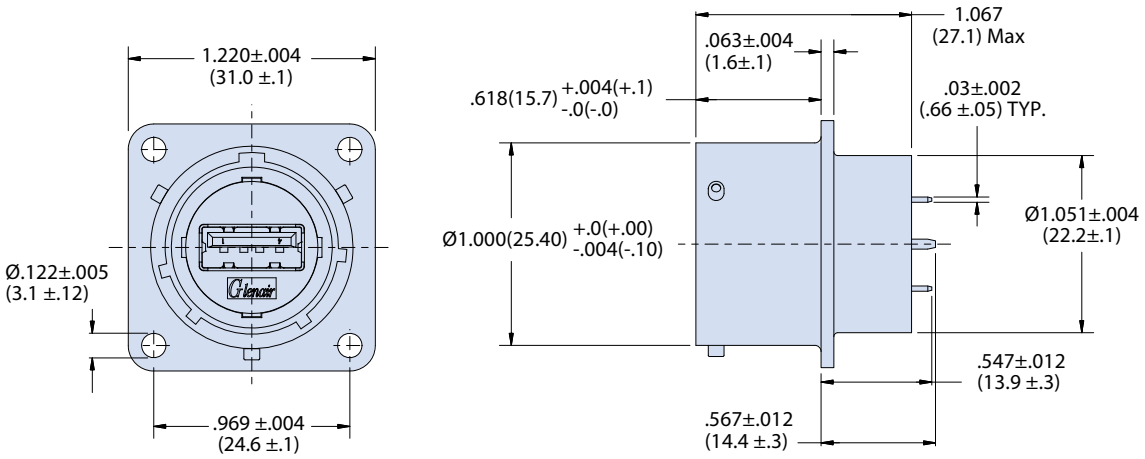

07 - REAR PANEL MOUNT JAM NUT RECEPTACLE

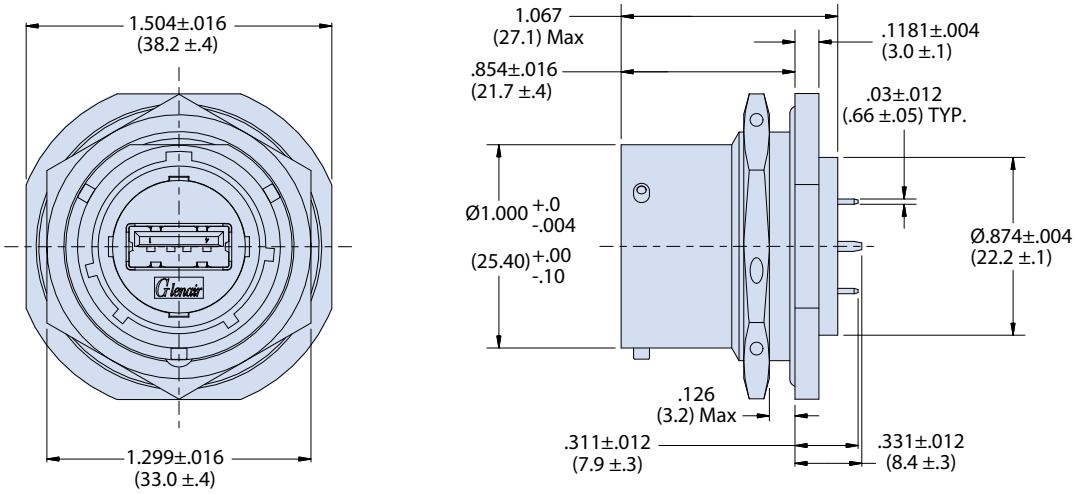

USB 2.0 TYPE A

Series IPT (26482 Type) Bayonet Coupler

IPT343 Receptacle with USB Female Interface to Solder Cup Termination









How to Order							
Sample Part Number	**IPT343**	**02**	**16**	**2**	**A**	**H**	**F6**
Basic Number	**IPT343**						
Connector Style[1]	**02** = Wall Mount Receptacle **07** = Rear Panel Mount Jam Nut Receptacle						
Shell Size	**16**						
USB Performance	**2** = 2.0						
USB Rear Jack Type	**A** = Type A						
Orientation Option	**H** = Horizontal **V** = Vertical						
Material/Finish	**Omit** for Cadmium/Olive Drab **F6** = Black Polymer Electrocoat **F7** = Conductive Black Zinc Nickel **F11** = Electroless Nickel						

USB Orientation Options

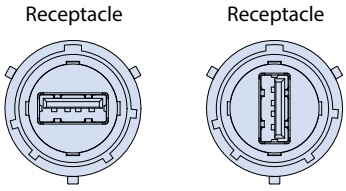

SOLDER CUP LAYOUTS FOR USB 2.0

Horizontal USB layout

-02 Style Solder Cup Layouts

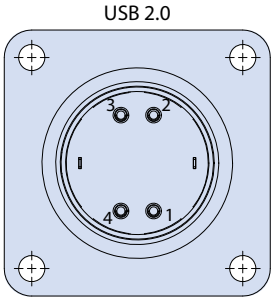

-07 Style Solder Cup Layouts

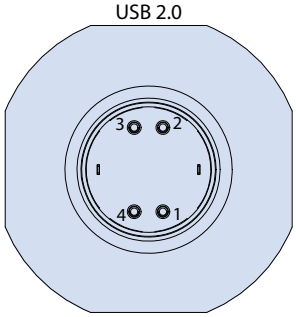

© 2016 Glenair, Inc • 1211 Air Way, Glendale, CA 91201 • 818-247-6000 • www.glenair.com • U.S. CAGE code 06324 • SuperSeal® Catalog
Dimensions in Inches (millimeters) are subject to change without notice.

02 - WALL MOUNT RECEPTACLE

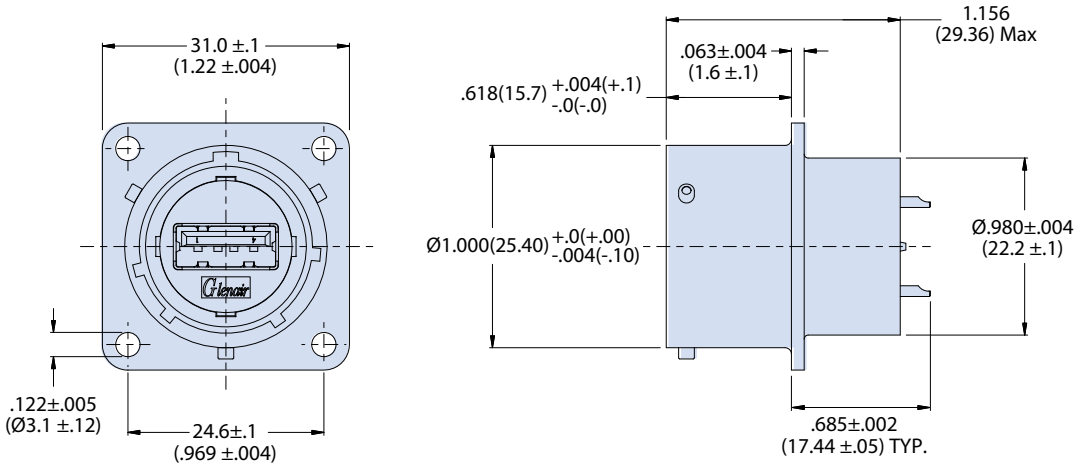

07 - REAR PANEL MOUNT JAM NUT RECEPTACLE

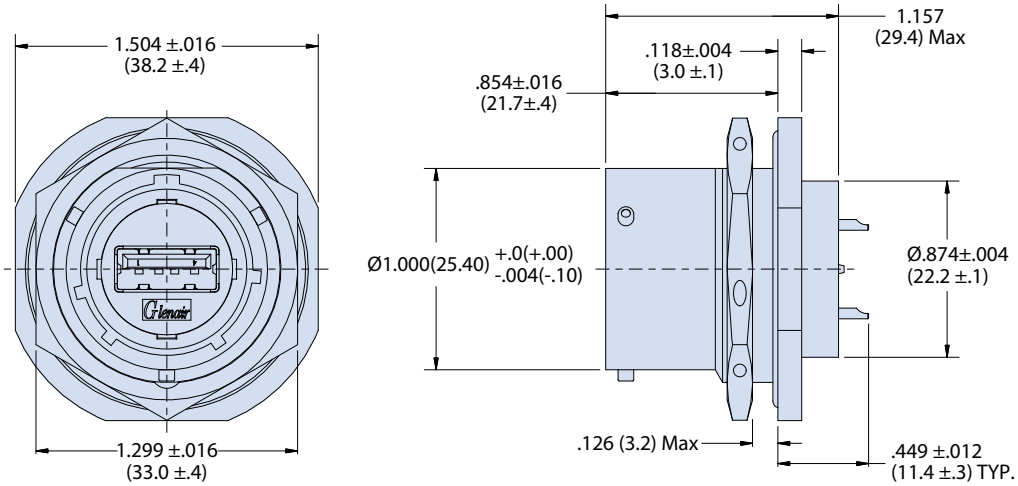

NOTES

1. See Section A panel cutout dimensions

© 2016 Glenair, Inc • 1211 Air Way, Glendale, CA 91201 • 818-247-6000 • www.glenair.com • U.S. CAGE code 06324 • SuperSeal® Catalog
Dimensions in Inches (millimeters) are subject to change without notice.

RJ45/USB SUPER SEAL™

USB 2.0 TYPE A

Series IPT (26482 Type) Bayonet Coupler

IPT345 Connectors with USB Male (Plug) or Female (Receptacle) Interface to Crimp Removable Contacts





How to Order							
Sample Part Number	**IPT345**	**00**	**16**	**2**	**A**	**H**	**F6**
Basic Number	**IPT345**						
Connector Style	**00** = Wall Mount Receptacle **070** = Rear Panel Mount Jam Nut Receptacle **06** = Straight Plug						
Shell Size	**16**						
USB Performance	**2** = 2.0						
USB Rear Jack Type	**A** = Type A						
Orientation Option	**H** = Horizontal **V** = Vertical						
Material/Finish	**Omit** for Cadmium/Olive Drab **F6** = Black Polymer Electrocoat **F7** = Conductive Black Zinc Nickel **F11** = Electroless Nickel						

USB Orientation Options

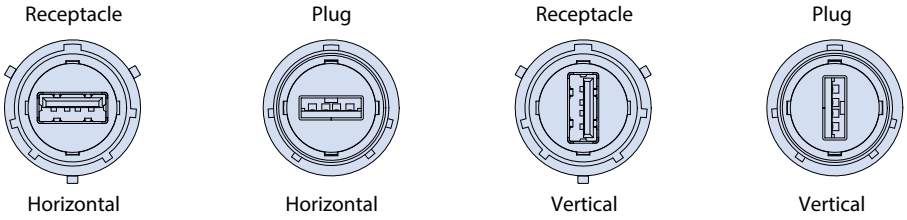

NOTES

1. See Section A for panel cutout dimensions

00 - WALL MOUNT RECEPTACLE WITH ACCESSORY THREADS

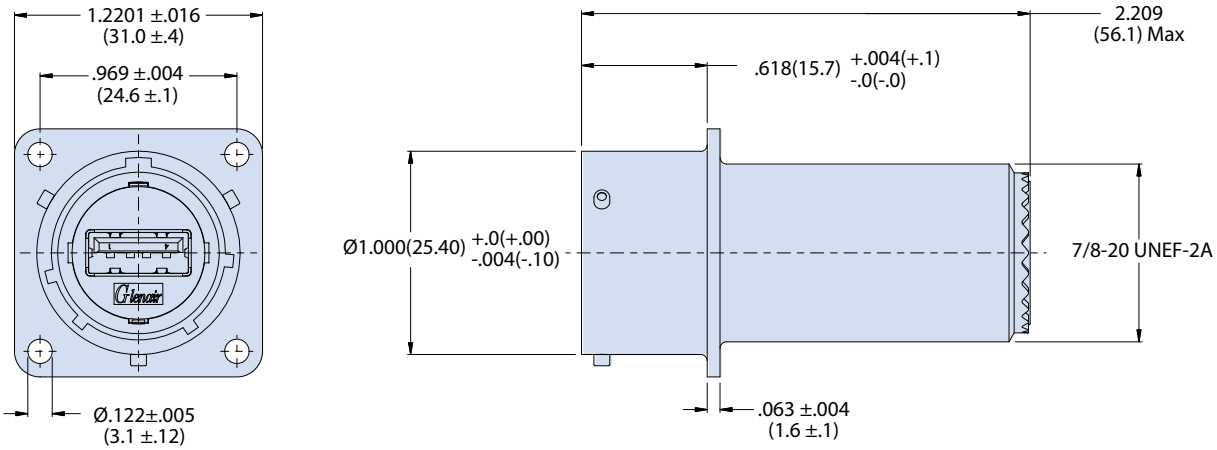

© 2016 Glenair, Inc • 1211 Air Way, Glendale, CA 91201 • 818-247-6000 • www.glenair.com • U.S. CAGE code 06324 • SuperSeal® Catalog
Dimensions in Inches (millimeters) are subject to change without notice.

070 - REAR PANEL MOUNT JAM NUT RECEPTACLE WITH ACCESSORY THREADS

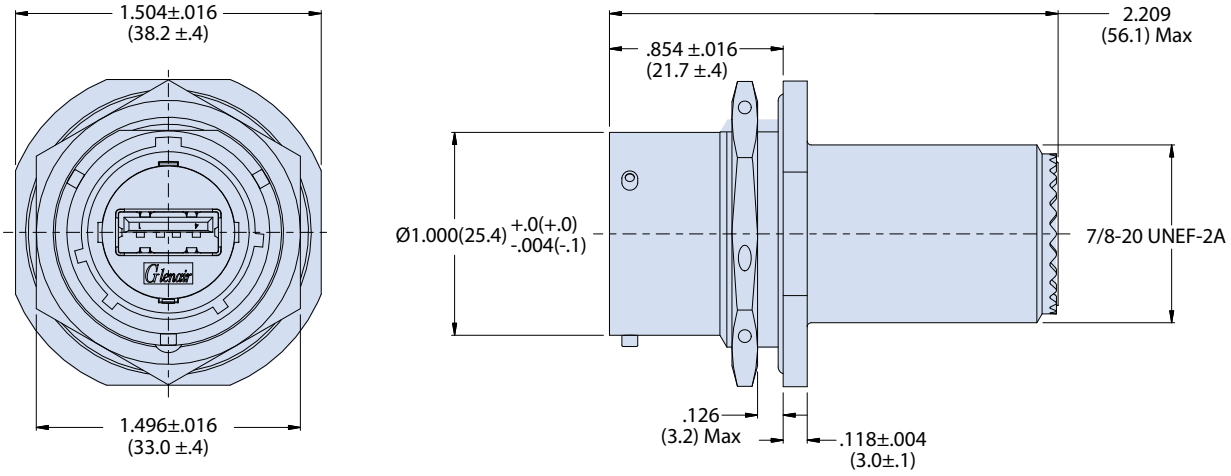

06 - PLUG WITH ACCESSORY THREADS

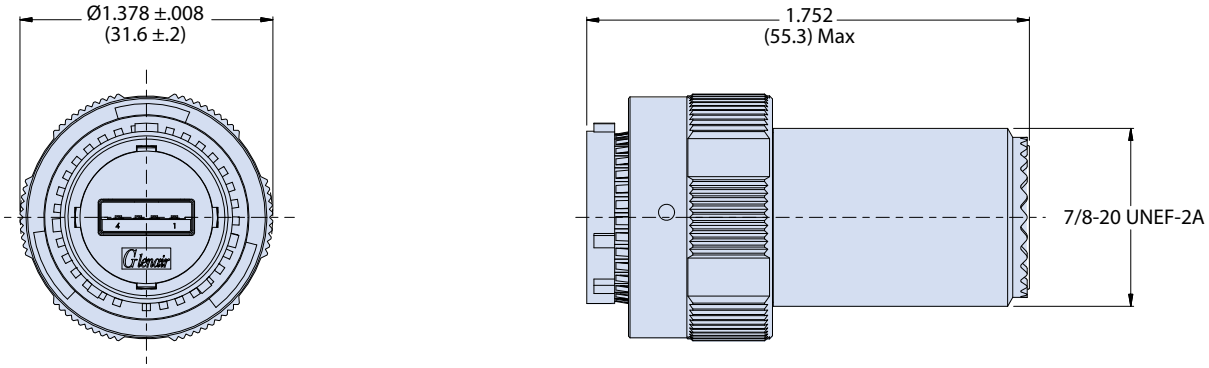

Crimp Contact Layout
(Horizontal Orientation Shown)

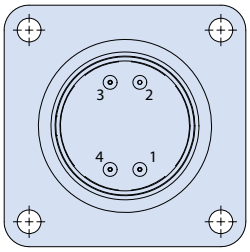

© 2016 Glenair, Inc • 1211 Air Way, Glendale, CA 91201 • 818-247-6000 • www.glenair.com • U.S. CAGE code 06324 • SuperSeal® Catalog
Dimensions in Inches (millimeters) are subject to change without notice.

USB 2.0 TYPE A

Series IPT (26482 Type) Bayonet Coupler

IPT370 Feedthrough Receptacle with USB Female-to-Female Interface



How to Order								
Sample Part Number	**IPT370**	**02PP**	**16**	**2**	**A**	**A**	**H**	**F6**

Basic Number	**IPT370**
Connector Style[1]	**02PP** = Rear Panel Mounting Receptacle Bulkhead Feed Through
Shell Size	**16**
USB Performance	**2** = 2.0
USB Rear Jack Type	**A** = Type A
USB Front Jack Type	**A** = Type A
USB Orientation	**H** = Horizontal **V** = Vertical
Material/Finish	Omit for Cadmium/Olive Drab **F6** = Black Polymer Electrocoat **F7** = Conductive Black Zinc Nickel **F11** = Electroless Nickel

NOTES

1. See Section A for panel cutout dimensions and complete finish options

USB Orientation Options

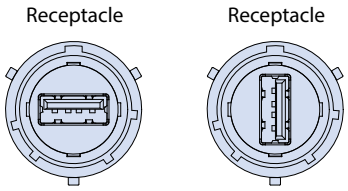

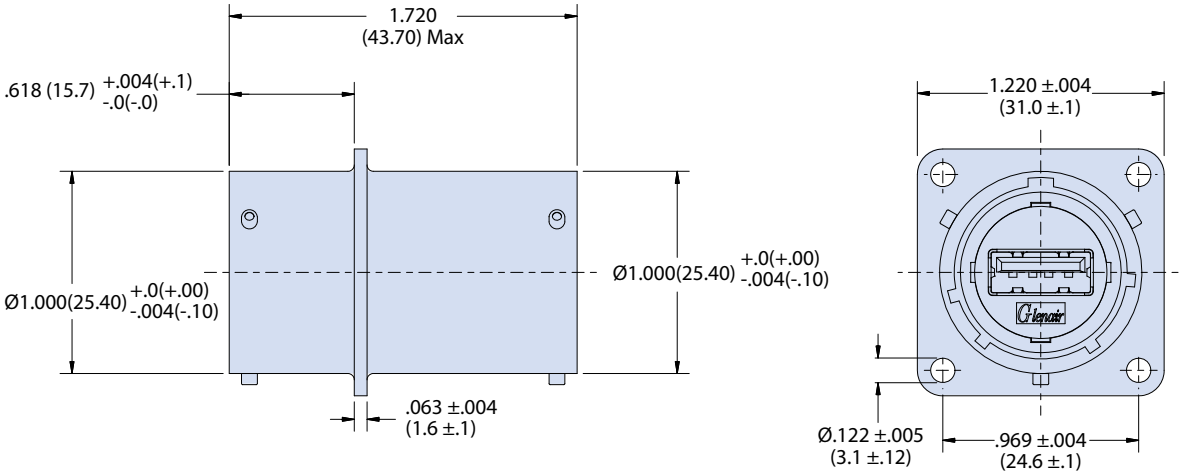

© 2016 Glenair, Inc • 1211 Air Way, Glendale, CA 91201 • 818-247-6000 • www.glenair.com • U.S. CAGE code 06324 • SuperSeal® Catalog
Dimensions in Inches (millimeters) are subject to change without notice.

USB 2.0 TYPE A

Series IPT (26482 Type) Bayonet Coupler

IPT340H Connector and Backshell with Banding Porch and Shrink Boot Groove

How to Order									
Sample Part Number	**IPT340H**	**00**	**16**	**2**	**A**	**A**	**H**	**ZL**	**F6**

Basic Number	**IPT340H**
Connector Style[1]	**00** = Wall Mount Receptacle with Accessory Threads **01** = InLine Receptacle with Accessory Threads **070** = Rear Panel Mount Jam Nut Receptacle with Accessory Threads **06** = Straight Plug Connector with Accessory Threads
Shell Size	**16**
USB Performance	**2** = 2.0
USB Rear Jack Type	**A** = Type A
USB Front Jack Type	**A** = Type A
USB Orientation	**H** = Horizontal **V** = Vertical
Backshell	**ZL** = With banding platform for direct attachment of cable shield and shrink boot groove
Material/Finish	**Omit** for Cadmium/Olive Drab **F7** = Conductive Black Zinc Nickel **F6** = Black Polymer Electrocoat **F11** = Electroless Nickel

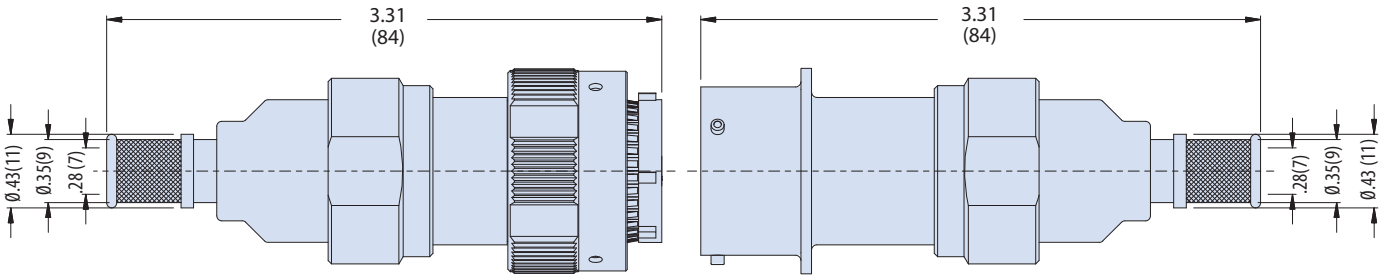

USB Orientation Options

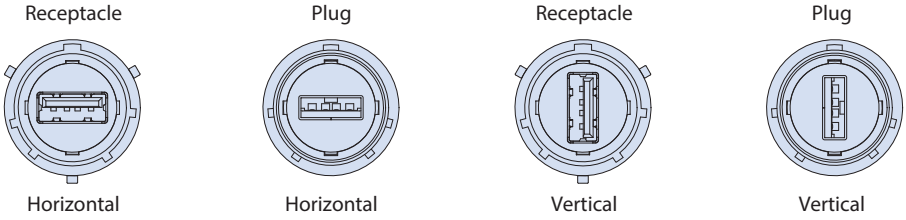

HEAT SHRINK BOOT

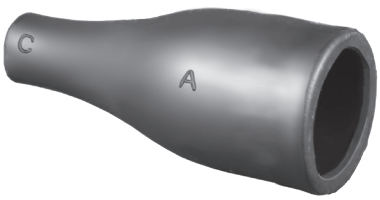

Glenair P/N : **770-004S903W2**

Must be ordered separately

Type 9 flexible polyolefin short profile boots have an operating temperature range of -40°C to 100°C and provide very good resistance to fuels, oils and solvents. These boots fit most standard boot adapters for circular connectors and are specifically designed for low temperature rated CAT5e and USB cables.

NOTES

1. See Section A for panel cutout dimensions

© 2016 Glenair, Inc • 1211 Air Way, Glendale, CA 91201 • 818-247-6000 • www.glenair.com • U.S. CAGE code 06324 • SuperSeal® Catalog
Dimensions in Inches (millimeters) are subject to change without notice.

RJ45/USB SUPER SEAL™

USB 2.0 TYPE A

Series IPT (26482 Type) Bayonet Coupler

IPT340H Connector and Backshell with Pigtail

Glenair®

How to Order										
Sample Part Number	**IPT340H**	**00**	**16**	**2**	**A**	**A**	**H**	**ZL**	**0.5**	**F6**

Basic Number	**IPT340H**
Connector Style[1]	**00** = Wall Mount Receptacle **01** = InLine Receptacle **070** = Rear Panel Mounting Jam Nut Receptacle **06** = Straight Plug Connector
Shell Size	**16**
USB Performance	**2** = 2.0
USB Rear Jack Type	**A** = Type A
USB Front Jack Type	**A** = Type A
USB Orientation	**H** = Horizontal **V** = Vertical
Backshell	**ZL** = Backshell with banding platform for direct attachment of cable shield and shrink boot pre-installed
Cable Length	**0.5** = 0.5 inch pigtail (See High Data Rate Cable P/N 963-012)
Material/Finish	**Omit** for Cadmium/Olive Drab **F7** = Conductive Black Zinc Nickel **F6** = Black Polymer Electrocoat **F11** = Electroless Nickel

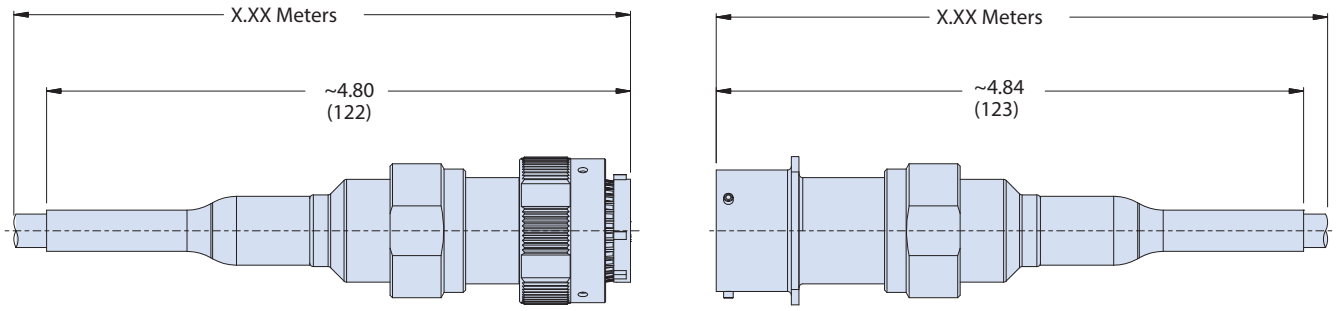

Plug and Receptacle with Pigtail

USB Orientation Options

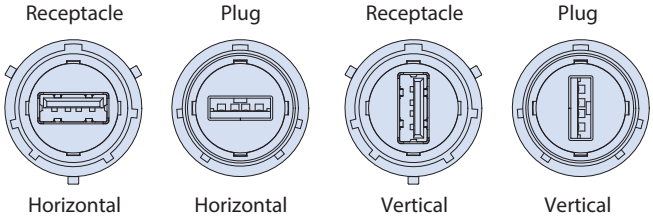

NOTES

1. See Section A for panel cutout dimensions

© 2016 Glenair, Inc • 1211 Air Way, Glendale, CA 91201 • 818-247-6000 • www.glenair.com • U.S. CAGE code 06324 • SuperSeal® Catalog
Dimensions in Inches (millimeters) are subject to change without notice.

USB 2.0 TYPE A

Series IPT (26482 Type) Bayonet Coupler

IPT340H Connector with Internal Metric Thread Backshell

How to Order									
Sample Part Number	**IPT340H**	**00**	**16**	**2**	**A**	**A**	**H**	**M**	**F6**

Basic Number	**IPT340H**
Connector Style[1]	**00** = Wall Mount Receptacle **01** = InLine Receptacle **070** = Rear Panel Mounting Jam Nut Receptacle **06** = Straight Plug Connector
Shell Size	**16**
USB Performance	**2** = 2.0
USB Rear Jack Type	**A** = Type A
USB Front Jack Type	**A** = Type A
Orientation Option	**H** = Horizontal **V** = Vertical
Backshell	**M** = Backshell with metric thread
Material/Finish	**Omit** for Cadmium/Olive Drab **F6** = Black Polymer Electrocoat **F7** = Conductive Black Zinc Nickel **F11** = Electroless Nickel

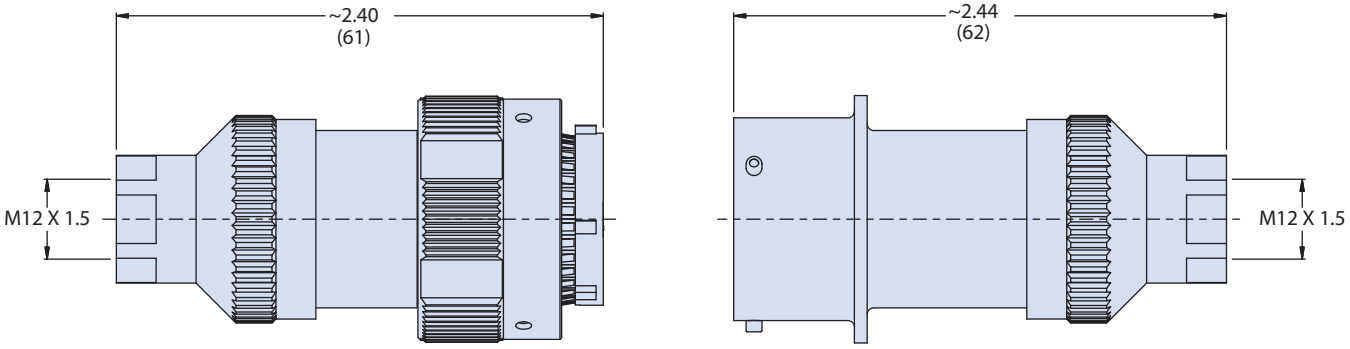

Plug and Receptacle without Cable Gland
(Other Backshell options are available, please consult the factory)

USB Orientation Options

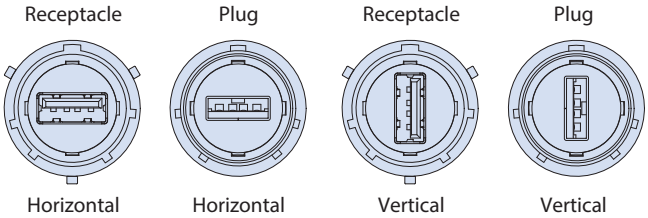

NOTES

1. See Section A panel cutout dimensions

© 2016 Glenair, Inc • 1211 Air Way, Glendale, CA 91201 • 818-247-6000 • www.glenair.com • U.S. CAGE code 06324 • SuperSeal® Catalog
Dimensions in Inches (millimeters) are subject to change without notice.

RJ45/USB SUPER SEAL™

USB 2.0 TYPE A

Series IPT (26482 Type) Bayonet Coupler

IPT340H Connector and Backshell with Cable Gland, with or without Pigtails

Glenair®

How to Order										
Sample Part Number	**IPT340H**	**00**	**16**	**2**	**A**	**A**	**H**	**MS1**	**0.5**	**F6**

Basic Number	**IPT340H**
Connector Style[1]	**00** = Wall Mount Receptacle **01** = InLine Receptacle **070** = Rear Panel Mounting Jam Nut Receptacle **06** = Straight Plug Connector with Accessory Threads
Shell Size	**16**
USB Performance	**2** = 2.0
USB Rear Jack Type	**A** = Type A
USB Front Jack Type	**A** = Type A
USB Orientation	**H** = Horizontal **V** = Vertical
Metallic Cable Gland	**M1**, **M2**, **MS1**, **MS2** See Metallic Cable Gland Table
Cable Length	**0.5** = 0.50 inch pigtail **Omit** for None
Material/Finish	**Omit** for Aluminum/Cadmium, Olive Drab (G3) **F6** = Black Polymer Electrocoat **F7** = Conductive Black Zinc Nickel **F11** = Electroless Nickel

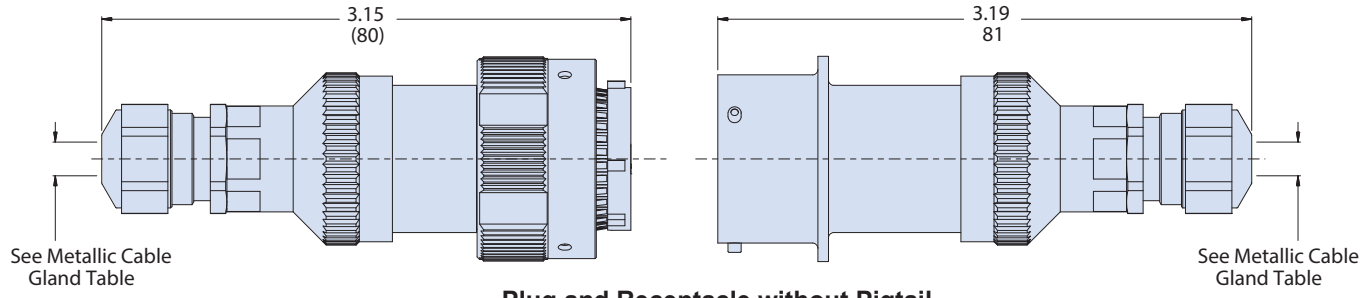

Plug and Receptacle without Pigtail

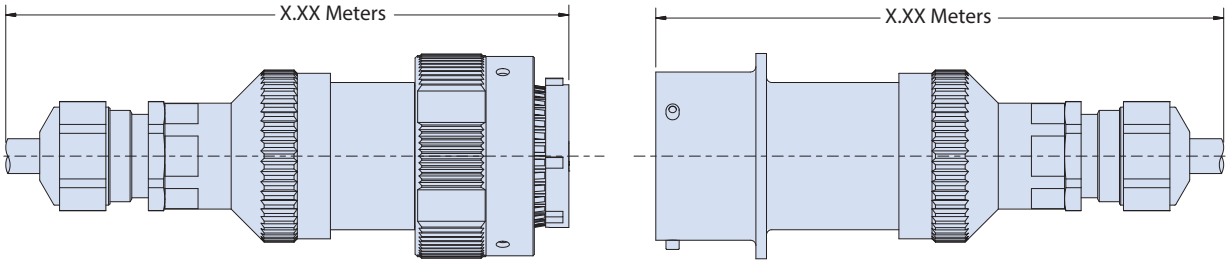

Plug and Receptacle with Pigtail

USB Orientation Options

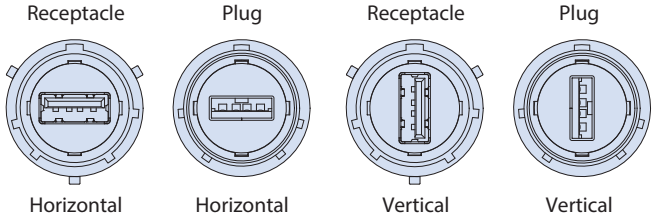

Metallic Cable Gland		
Type	Cable Range	Shield
M1	.13 - .19 (3.5 - 5)	No
M2	.25 - .31 (6.5 - 8)	No
MS1	.17 - .23 (4.5 - 6)	Yes
MS2	.23 - .29 (6 - 7.5)	Yes

NOTES

1. See Section A for panel cutout dimensions

© 2016 Glenair, Inc • 1211 Air Way, Glendale, CA 91201 • 818-247-6000 • www.glenair.com • U.S. CAGE code 06324 • SuperSeal® Catalog
Dimensions in Inches (millimeters) are subject to change without notice.

RJ12, RJ45, AND USB 2.0 TYPE A

SuperSeal™ 28840 Type Connectors

Product Selection Guide



900-320 Page H-2

SuperSeal™ Coupler with Accessory Threads and RJ12 Plug-to-Jack (Plug) or Jack-to-Jack (Receptacle).



900-300 Page H-4

SuperSeal™ Coupler with Accessory Threads and RJ45 Plug-to-Jack (Plug) or Jack-to-Jack (Receptacle).



900-301 Page H-6

SuperSeal™ Connector with Accessory Threads and RJ45 Plug (Plug) or Jack (Receptacle) to Crimp Removable Contacts.



900-340 Page H-8

SuperSeal™ Coupler with Accessory Threads and USB Male-to-Female (Plug) or Female-to-Female (Receptacle).



900-345 Page H-10

SuperSeal™ Connector with Accessory Threads and USB Male (Plug) or Female (Receptacle) to Crimp Removable Contacts.

H

RJ12 PHONE INTERFACE

28840 SuperSeal™

900-320 Coupler with Accessory Threads and RJ12 Plug-to-Jack (Plug) or Jack-to-Jack (Receptacle)

How to Order							
Part Number Example	**900-320**	**NF**	**D0**	**-**	**17**	**1**	**1**

Basic Number	**900-320**
Material/Finish	See Material and Finish Options Table
Connector Style	**D0** = Receptacle, Wall Mount **05** = Receptacle, Inline **07** = Receptacle, Jam Nut **G6** = Plug
Shielding	**–** = Inline Shielded RJ45 **G** = Inline Shielded and Grounded to Shell (See Note 2)
Shell Size	**15** or **17**
Alternate Polarization	**1**, **2**, **3**, **4**, **5**, **6** See Section A for details (Per MIL-DTL-28840)
RJ12 Orientation Option	**1**, **2**, **3**, **4** (See below for options)

Wall Mount & Inline Receptacle Dimensions

Shell Size	A Thread	B Sq	C Bsc	D Thread	E	ØF
15	1.062-.1P-.2L-DS-2A	1.278 (32.46) 1.238 (31.45)	.968 (24.59)	1.000-20 UNEF 2A	1.080 (27.43) 1.070 (27.18)	1.275 (32.39) 1.255 (31.88)
17	1.125-.1P-.2L-DS-2A	1.403 (35.64) 1.363 (34.62)	1.015 (25.78)	1.125-18 UNEF 2A	1.143 (29.03) 1.133 (28.78)	1.338 (33.99) 1.318 (33.48)

Jam Nut Receptacle & Plug Dimensions

Shell Size	ØG	H	J Flat	K Thread	ØL Max
15	1.681 (42.70) 1.661 (42.19)	1.587 (40.31) 1.567 (39.80)	1.153 (29.29) 1.144 (29.06)	1.1875-18 UNEF 2A	1.263 (32.08)
17	1.743 (44.27) 1.723 (43.76)	1.649 (41.88) 1.629 (41.38)	1.216 (30.89) 1.207 (30.66)	1.250-18 UNEF 2A	1.387 (35.23)

Material and Finish Options

Code	Material	Finish Description
NF	Aluminum	Cadmium O. D. Over Electroless Nickel (500 hour Salt Spray)
ZN		Zinc Nickel, Olive Drab
MT		Nickel-PTFE,1000 Hour Grey™
Z1	Stainless Steel	Passivate
ZU		Black Cadmium Over Nickel
AB	Marine Bronze	None (Clean Only)

RJ12 JACK ORIENTATION OPTIONS

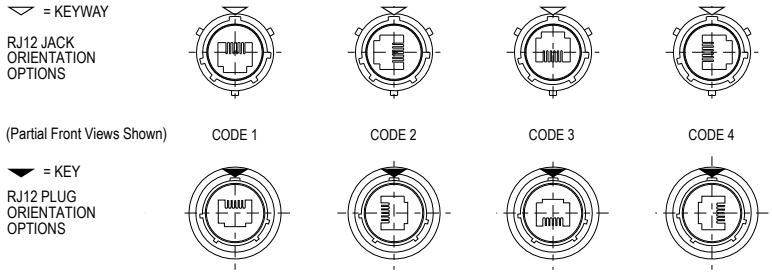

NOTES

1. Receptacle meets IP67 requirements in the unmated condition and plug meets IP68 requirements in the mated condition, consult factory for details.
2. "G" option only with receptacle.
3. Connector accessory features per M28840 connector designator G. Consult factory for accessory selection.

SPECIFICATIONS

- RJ12 coupler maintains shield continuity
- Wiring: straight through
- RoHS compliant
- Electrical: current rating: 1.5 Amp
- D.W.V.: 1000 VDC (700 VAC)
- Operating temperature: -40°C to +120°C

Wiring Diagram*

Pin	Modern Color Code (UTP)	Old Color Code	Destination
1	white/green	white	T3 (Tip 3)
2	white/orange	black	T2 (Tip 2)
3	blue/white	red	R1 (Ring 1)
4	white/blue	green	T1 (Tip 1)
5	orange/white	orange	R2 (Ring 2)
6	green/white	blue	R3 (Ring 3)

Pair 1 = Primary dial tone or talk circuit on a single line

Pair 2 = Secondary dial tone on a two line or data control circuit for an electronic key phone

Pair 3 = Third dial tone on a three line or an accessory circuit for an electronic key phone

*Wiring Diagram based on industry standard USOC-6

Recommended Panel Cutouts

Shell Size	ØM	ØN	P Flat
15	1.124 (28.55)	1.203 (30.56) 1.193 (30.30)	1.165 (29.59) 1.155 (29.34)
17	1.187 (30.15)	1.265 (32.13) 1.255 (31.88)	1.228 (31.19) 1.218 (30.94)

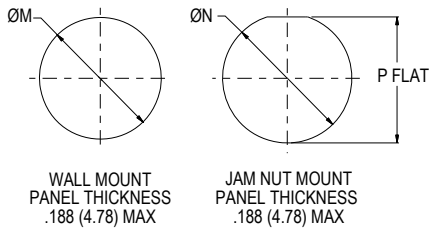

© 2016 Glenair, Inc • 1211 Air Way, Glendale, CA 91201 • 818-247-6000 • www.glenair.com • U.S. CAGE code 06324 • SuperSeal™ Catalog
Dimensions in Inches (millimeters) are subject to change without notice.

900-320 Coupler with Accessory Threads and RJ12 Plug-to-Jack (Plug) or Jack-to-Jack (Receptacle)

G6 - PLUG (JAM NUT RECEPTACLE & PLUG DIMENSIONS TABLE)

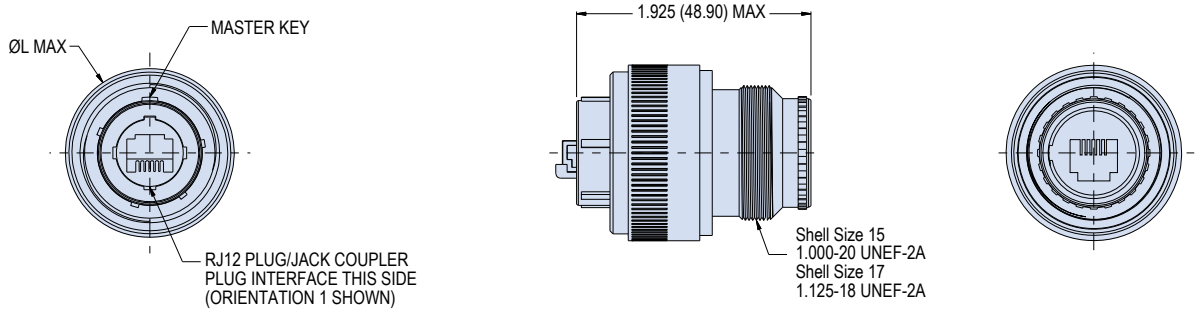

D0 - WALL MOUNT RECEPTACLE (SEE WALL MOUNT & INLINE RECEPTACLE DIMENSIONS TABLE)

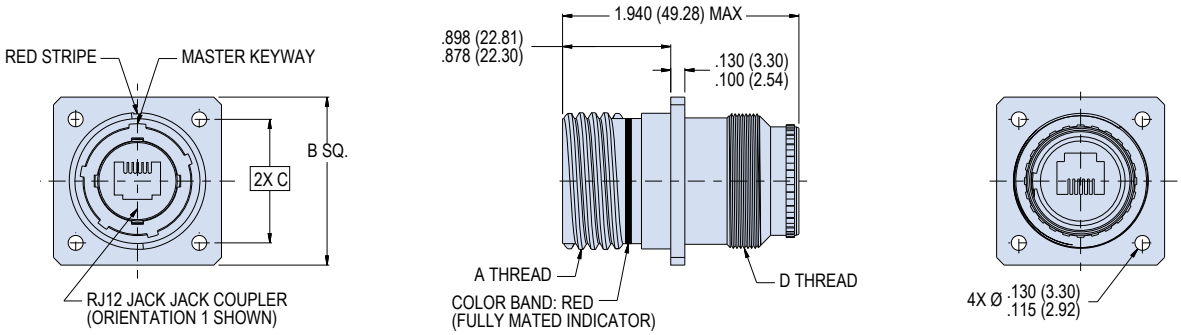

05 - RECEPTACLE, INLINE (SEE WALL MOUNT & INLINE RECEPTACLE DIMENSIONS TABLE)

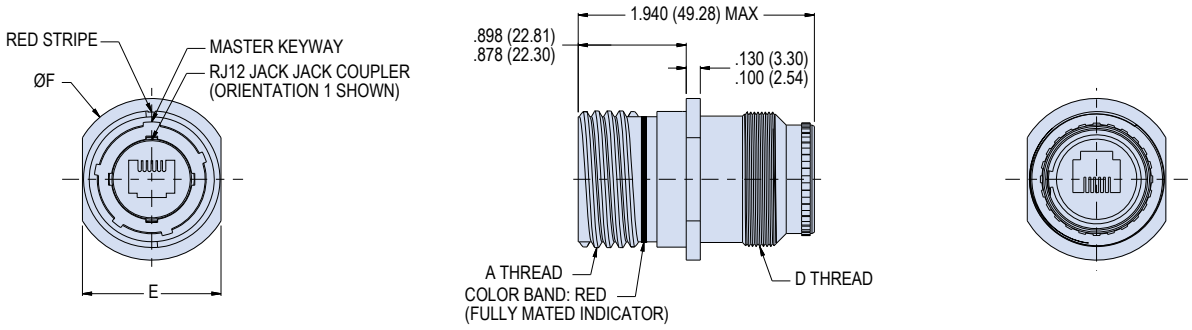

07 - JAM NUT MOUNT RECEPTACLE (JAM NUT RECEPTACLE & PLUG DIMENSIONS TABLE)

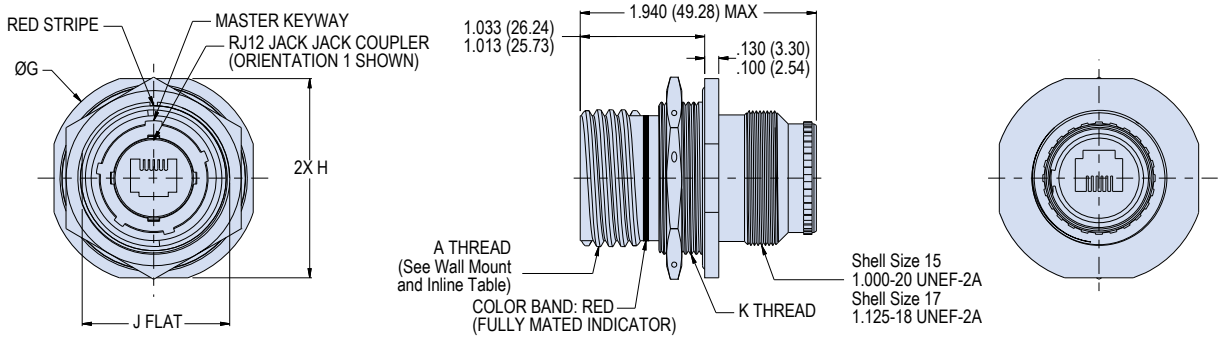

© 2016 Glenair, Inc • 1211 Air Way, Glendale, CA 91201 • 818-247-6000 • www.glenair.com • U.S. CAGE code 06324 • SuperSeal™ Catalog

Dimensions in Inches (millimeters) are subject to change without notice.

28840 SuperSeal™

900-300 Coupler with Accessory Threads and RJ45 Plug-to-Jack (Plug) or Jack-to-Jack (Receptacle)

How to Order								
Part Number Example	**900-300**	**NF**	**D0**	**-**	**17**	**5H**	**1**	**1**

Basic Number	**900-300**
Material/Finish	See Material and Finish Options Table
Connector Style	**D0** = Receptacle, Wall Mount **05** = Receptacle, Inline **07** = Receptacle, Jam Nut **G6** = Plug
Shielding	**–** = Inline Shielded RJ45 **G** = Inline Shielded and Grounded to Shell
Shell Size	**17** or **19** (See Note 1)
RJ45 Category	**5H** = Cat 5E For Cat 6A applications consult factory
Alternate Polarization	**1**, **2**, **3**, **4**, **5**, **6** See connector specifications page for further information (Per MIL-DTL-28840)
RJ45 Orientation Option	**1**, **2**, **3**, **4** (See below for options)

Wall Mount & Inline Receptacle Dimensions

Shell Size	A Thread	B Sq	C Bsc	D Thread	E	ØF
17	1.125-.1P-.2L-DS-2A	1.403 (35.64) 1.363 (34.62)	1.015 (25.78)	1.125-18 UNEF 2A	1.143 (29.03) 1.133 (28.78)	1.338 (33.99) 1.318 (33.48)
19	1.312-.1P-.2L-DS-2A	1.528 (38.81) 1.488 (37.80)	1.140 (28.96)	1.250-18 UNEF 2A	1.330 (33.78) 1.320 (33.53)	1.525 (38.74) 1.505 (38.23)

Jam Nut Receptacle & Plug Dimensions

Shell Size	ØG	H	J Flat	K Thread	ØL	ØN Max
17	1.743 (44.27) 1.723 (43.76)	1.649 (41.88) 1.629 (41.38)	1.216 (30.89) 1.207 (30.66)	1.250-18 UNEF 2A	1.354 (34.39) 1.344 (34.14)	1.387 (35.23)
19	1.931 (49.05) 1.911 (48.54)	1.837 (46.66) 1.817 (46.16)	1.403 (35.64) 1.394 (35.41)	1.4375-18 UNEF 2A	1.542 (39.17) 1.532 (38.91)	1.513 (38.43)

Panel Cutouts

Shell Size	ØP	ØR	S Flat
17	1.187 (30.15)	1.265 (32.13) 1.255 (31.88)	1.228 (31.19) 1.218 (30.94)
19	1.374 (34.90)	1.453 (36.91) 1.443 (36.65)	1.415 (35.94) 1.405 (35.69)

Material and Finish Options

Code	Material	Finish Description
NF	Aluminum	Cadmium O. D. Over Electroless Nickel (500 hour Salt Spray)
ZN		Zinc Nickel, Olive Drab
MT		Nickel-PTFE,1000 Hour Grey™
Z1	Stainless Steel	Passivate
ZU		Black Cadmium Over Nickel
AB	Marine Bronze	None (Clean Only)

RECOMMENDED PANEL CUT-OUTS

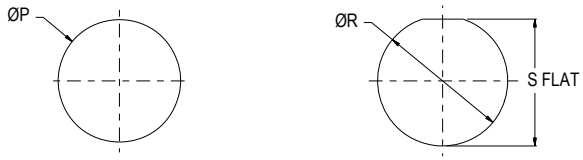

WALL MOUNT
PANEL THICKNESS .188 (4.78) MAX

JAM NUT MOUNT
PANEL THICKNESS .188 (4.78) MAX

NOTES

1. Size 17 uses rear shielding sleeve.
   Size 19 uses front and rear shielding sleeve.
2. Connector accessory features per M28840 connector designator G. Consult factory for accessory selection.
3. Receptacle connector meets IP67 requirements in the unmated condition and plug meets IP68 requirements in the mated condition, consult factory for details.

RJ45 ORIENTATION OPTIONS

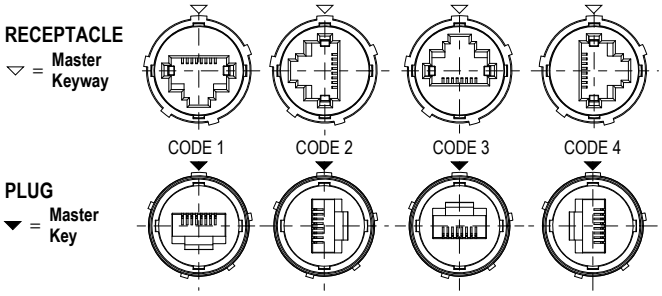

© 2016 Glenair, Inc • 1211 Air Way, Glendale, CA 91201 • 818-247-6000 • www.glenair.com • U.S. CAGE code 06324 • SuperSeal™ Catalog
Dimensions in Inches (millimeters) are subject to change without notice.

900-300 Coupler with Accessory Threads and RJ45 Plug-to-Jack (Plug) or Jack-to-Jack (Receptacle)

G6 - PLUG (JAM NUT RECEPTACLE & PLUG DIMENSIONS TABLE)

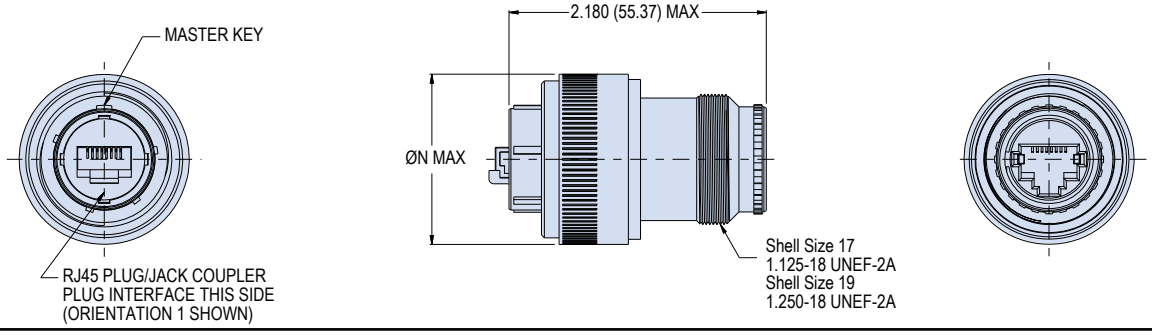

D0 - WALL MOUNT RECEPTACLE (WALL MOUNT & INLINE RECEPTACLE DIMENSIONS TABLE)

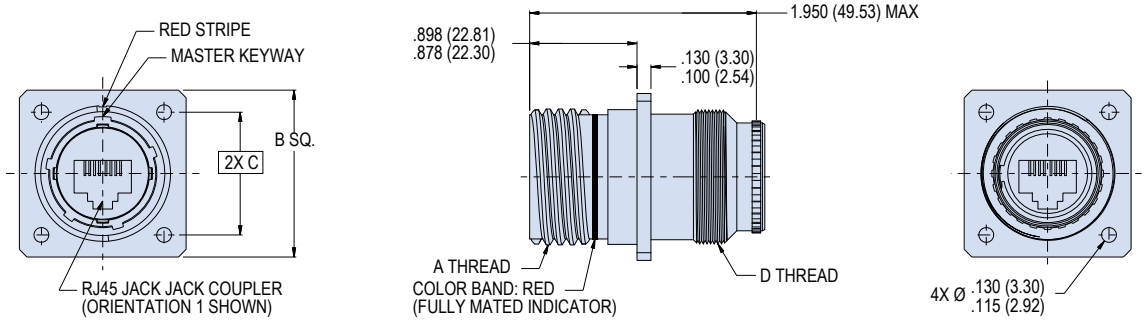

05 - RECEPTACLE, INLINE (WALL MOUNT & INLINE RECEPTACLE DIMENSIONS TABLE)

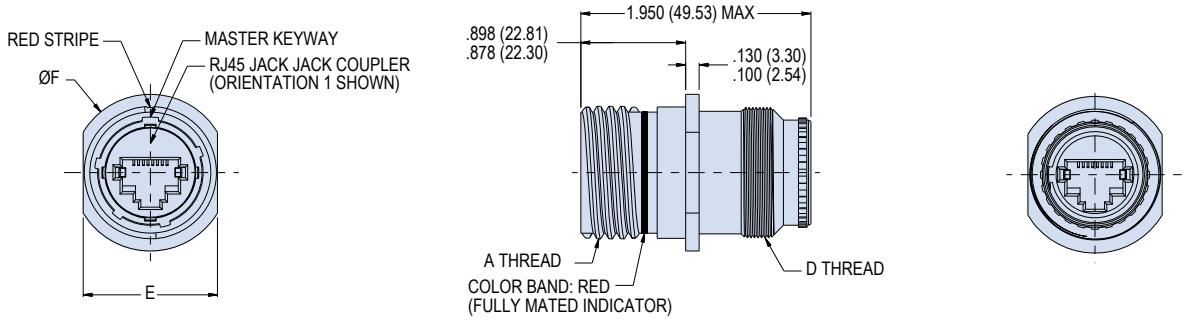

07 - JAM NUT MOUNT RECEPTACLE (JAM NUT RECEPTACLE & PLUG DIMENSIONS TABLE)

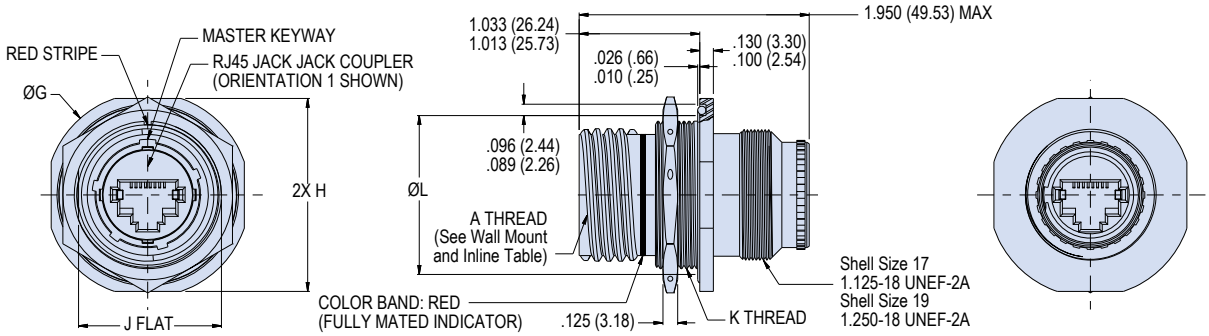

© 2016 Glenair, Inc • 1211 Air Way, Glendale, CA 91201 • 818-247-6000 • www.glenair.com • U.S. CAGE code 06324 • SuperSeal™ Catalog

Dimensions in Inches (millimeters) are subject to change without notice.

28840 SuperSeal™

900-301 Connector with RJ45 Plug (Plug) or Jack (Receptacle) to Crimp Removable Contacts

How to Order								
Part Number Example	**900-301**	**NF**	**D0**	**-**	**17**	**5H**	**1**	**1**

Basic Number	**900-301** = Connector with Accessoy Threads
Material/Finish	See Material and Finish Options Table
Connector Style	**D0** = Receptacle, Wall Mount **05** = Receptacle, Inline **07** = Receptacle, Jam Nut **G6** = Plug
Shielding	**–** = Inline Shielded RJ45 **G** = Inline Shielded and Grounded to Shell (See Note 4)
Shell Size	**17** or **19**
RJ45 Category	**5H** = CAT5E For Cat 6A applications consult factory
Alternate Polarization	**1, 2, 3, 4, 5, 6** See connector specifications page for further information (Per MIL-DTL-28840)
RJ45 Orientation	**1, 2, 3, 4** (See below for options)

Wall Mount & Inline Receptacle Dimensions

Shell Size	A Thread	B Sq	C Bsc	D Thread	E	ØF
17	1.125-.1P-.2L-DS-2A	1.403 (35.64) 1.363 (34.62)	1.015 (25.78)	1.125-18 UNEF 2A	1.143 (29.03) 1.133 (28.78)	1.338 (33.99) 1.318 (33.48)
19	1.312-.1P-.2L-DS-2A	1.528 (38.81) 1.488 (37.80)	1.140 (28.96)	1.250-18 UNEF 2A	1.330 (33.78) 1.320 (33.53)	1.525 (38.74) 1.505 (38.23)

Jam Nut Receptacle & Plug Dimensions

Shell Size	ØG	H	J Flat	K Thread	ØL Max
17	1.743 (44.27) 1.723 (43.76)	1.649 (41.88) 1.629 (41.38)	1.216 (30.89) 1.207 (30.66)	1.250-18 UNEF 2A	1.387 (35.23)
19	1.931 (49.05) 1.911 (48.54)	1.837 (46.66) 1.817 (46.16)	1.403 (35.64) 1.394 (35.41)	1.4375-18 UNEF 2A	1.513 (38.43)

Panel Cutouts

Shell Size	ØP	ØR	S Flat
17	1.187 (30.15)	1.265 (32.13) 1.255 (31.88)	1.228 (31.19) 1.218 (30.94)
19	1.374 (34.90)	1.453 (36.91) 1.443 (36.65)	1.415 (35.94) 1.405 (35.69)

Material and Finish Options

Code	Material	Finish Description
NF	Aluminum	Cadmium O. D. Over Electroless Nickel (500 hour Salt Spray)
ZN		Zinc Nickel, Olive Drab
MT		Nickel-PTFE,1000 Hour Grey™
Z1	Stainless Steel	Passivate
ZU		Black Cadmium Over Nickel
AB	Marine Bronze	None (Clean Only)

RECOMMENDED PANEL CUT-OUTS

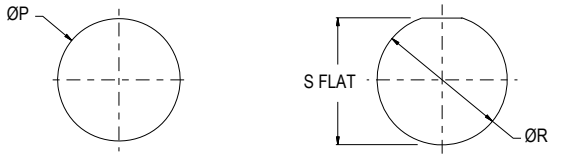

WALL MOUNT
PANEL THICKNESS .188 (4.78) MAX

JAM NUT MOUNT
PANEL THICKNESS .188 (4.78) MAX

NOTES

1. Connector meets general requirements of MIL-DTL-28840 and RJ45 connector meets TIA 568B standard.
2. Crimp removable contacts to conform to M39029/58-360 - size 22 pin contacts supplied loose.
3. Receptacle connector designed to meet IP67 unmated condition. Plug connector designed to meet IP68 mated condition, consult factory for detailed information.
4. "G" indicates RJ45 coupler is shielded inline and grounded to shell.
5. Connector accessory features per M28840 connector designator G. Consult factory for crimp tool and accessory selection.

RJ45 ORIENTATION OPTIONS

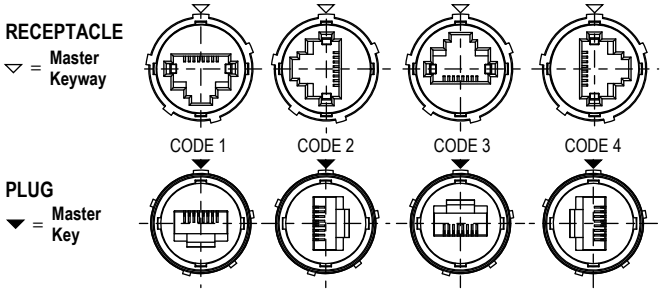

© 2016 Glenair, Inc • 1211 Air Way, Glendale, CA 91201 • 818-247-6000 • www.glenair.com • U.S. CAGE code 06324 • SuperSeal™ Catalog
Dimensions in Inches (millimeters) are subject to change without notice.

900-301 Connector with RJ45 Plug (Plug) or Jack (Receptacle) to Crimp Removable Contacts

G6 - PLUG (JAM NUT RECEPTACLE & PLUG DIMENSIONS TABLE)

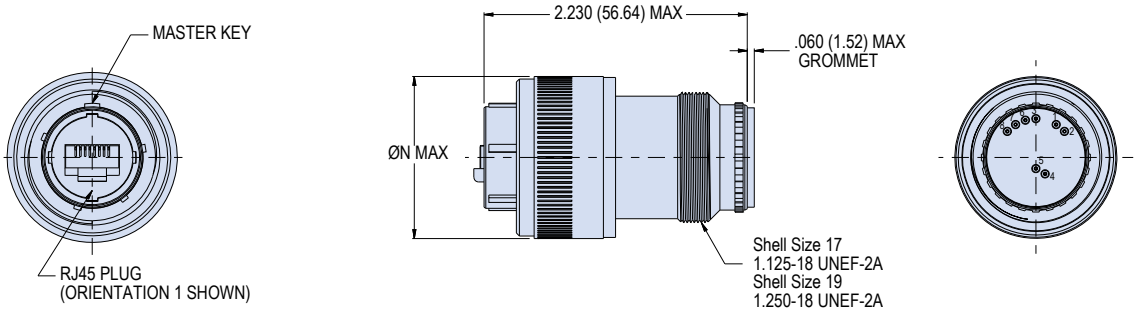

D0 - WALL MOUNT RECEPTACLE (WALL MOUNT & INLINE RECEPTACLE DIMENSIONS TABLE)

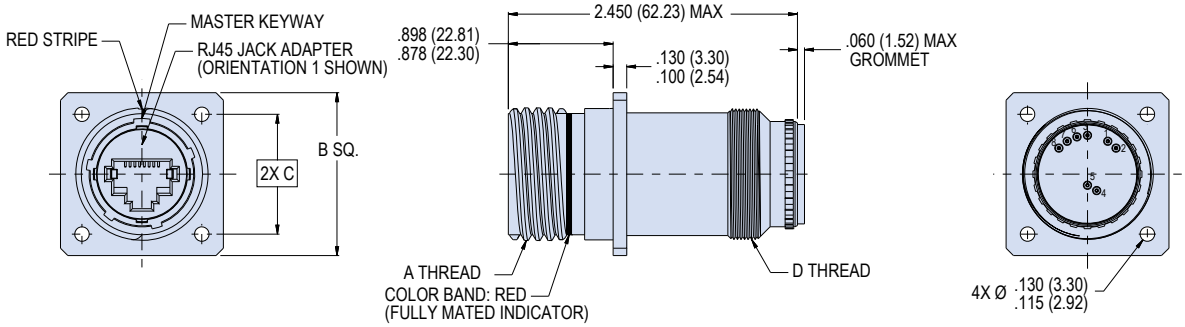

05 - RECEPTACLE, INLINE (WALL MOUNT & INLINE RECEPTACLE DIMENSIONS TABLE)

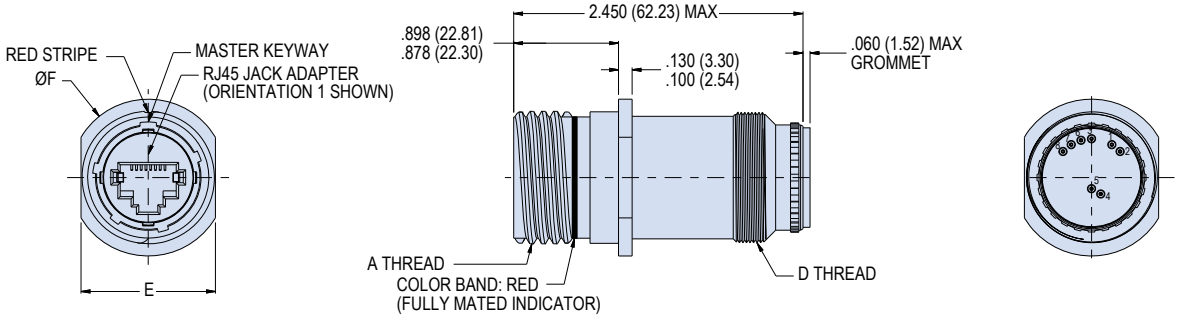

07 - JAM NUT MOUNT RECEPTACLE (JAM NUT RECEPTACLE & PLUG DIMENSIONSTABLE)

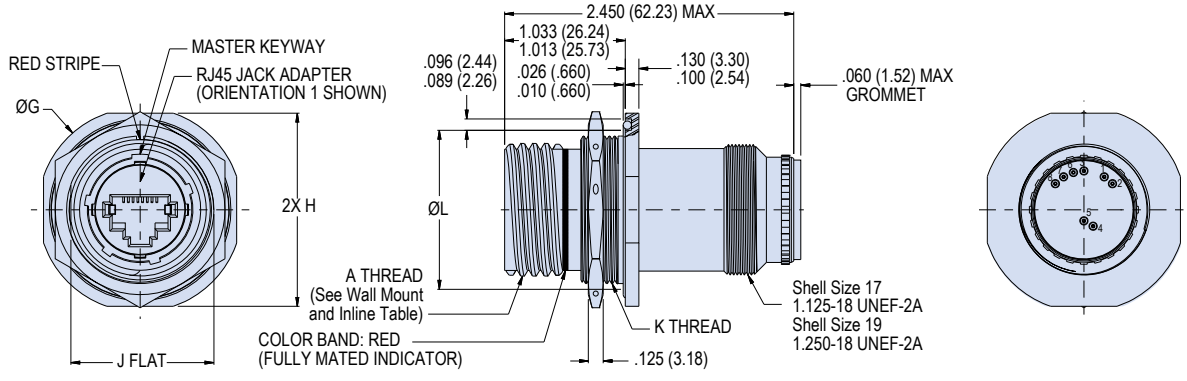

© 2016 Glenair, Inc • 1211 Air Way, Glendale, CA 91201 • 818-247-6000 • www.glenair.com • U.S. CAGE code 06324 • SuperSeal™ Catalog

Dimensions in Inches (millimeters) are subject to change without notice.

USB 2.0 TYPE A

28840 SuperSeal™

900-340 Coupler with Accessory Threads and USB Male-to-Female (Plug) or Female-to-Female (Receptacle)

How to Order									
Part Number Example	**900-340**	**NF**	**D0**	**-15**	**2**	**A**	**A**	**1**	**H**

Basic Number	**900-340**
Material/Finish	See Material and Finish Options Table
Connector Style	**D0** = Receptacle, Wall Mount **05** = Receptacle, Inline **07** = Receptacle, Jam Nut **G6** = Plug
Shell Size	**15**
USB Performance	**2** = USB 2.0
USB Interface Type (Front)	**A** = Type A
USB Interface Type (Back)	**A** = Type A
Alternate Polarization	**1**, **2**, **3**, **4**, **5**, and **6** See connector specifications page for further information (Per MIL-DTL-28840)
USB Orientation	**H** = Horizontal **V** = Vertical (See below for options)

USB 2.0 Wiring			
Pin	**Name**	**Cable Color (USB)**	**Description**
1	(V BUS)	Red	+5 V
2	(D-)	White	Data -
3	(D+)	Green	Data +
4	(GND)	Black	Ground

Material and Finish Options		
Code	**Material**	**Finish Description**
NF	Aluminum	Cadmium O. D. Over Electroless Nickel (500 hour Salt Spray)
ZN		Zinc Nickel, Olive Drab
MT		Nickel-PTFE,1000 Hour Grey™
Z1	Stainless Steel	Passivate
ZU		Black Cadmium Over Nickel
AB	Marine Bronze	None (Clean Only)

NOTES

1. Connector and contacts shall meet general requirements of MIL-DTL-28840 and USB receptacle meets USB 2.0 standard.
2. Connector meets IP67 in the unmated condition.
3. Connector accessory features per M28840 connector designator G. Consult factory for shrink boot option and accessory selection.

RECOMMENDED PANEL CUT-OUTS

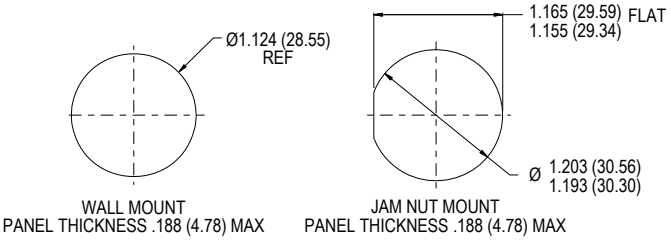

USB ORIENTATION OPTIONS

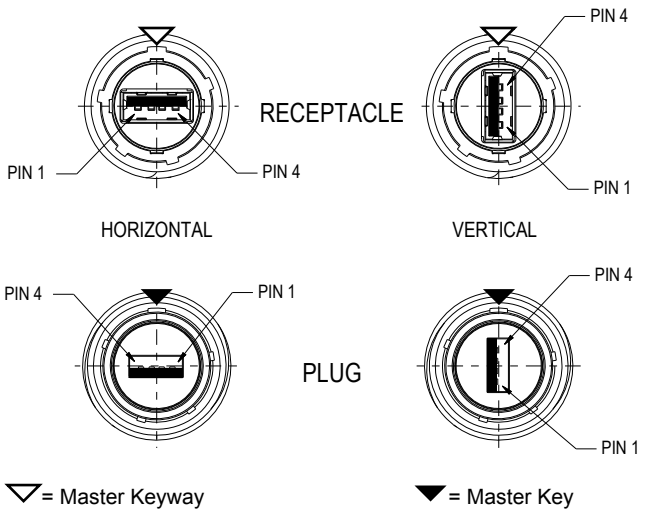

© 2016 Glenair, Inc • 1211 Air Way, Glendale, CA 91201 • 818-247-6000 • www.glenair.com • U.S. CAGE code 06324 • SuperSeal™ Catalog
Dimensions in Inches (millimeters) are subject to change without notice.

900-340 Coupler with Accessory Threads and USB Male-to-Female (Plug) or Female-to-Female (Receptacle)

G6 - PLUG

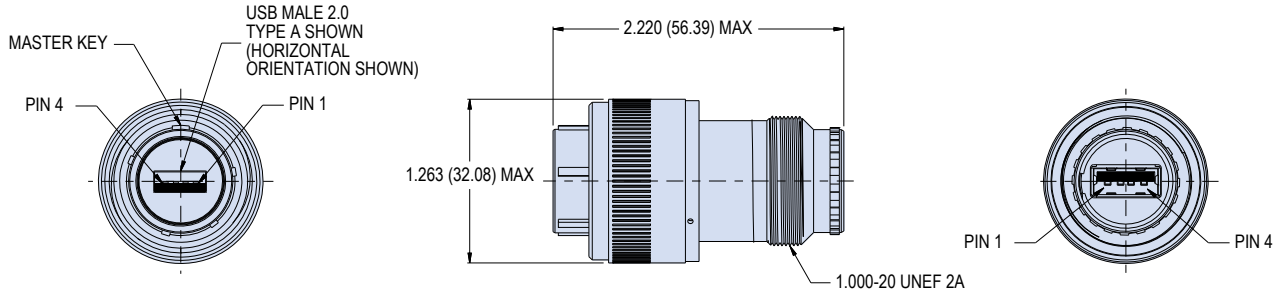

D0 - WALL MOUNT RECEPTACLE

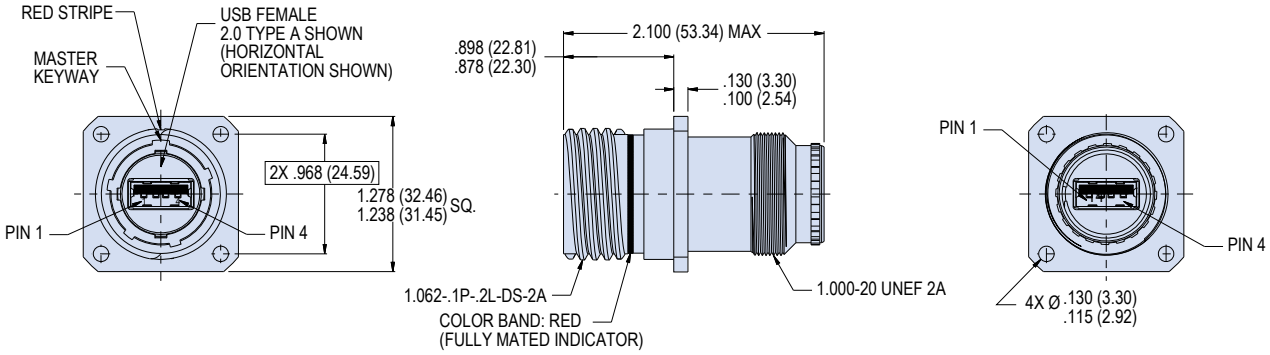

05 - RECEPTACLE, INLINE

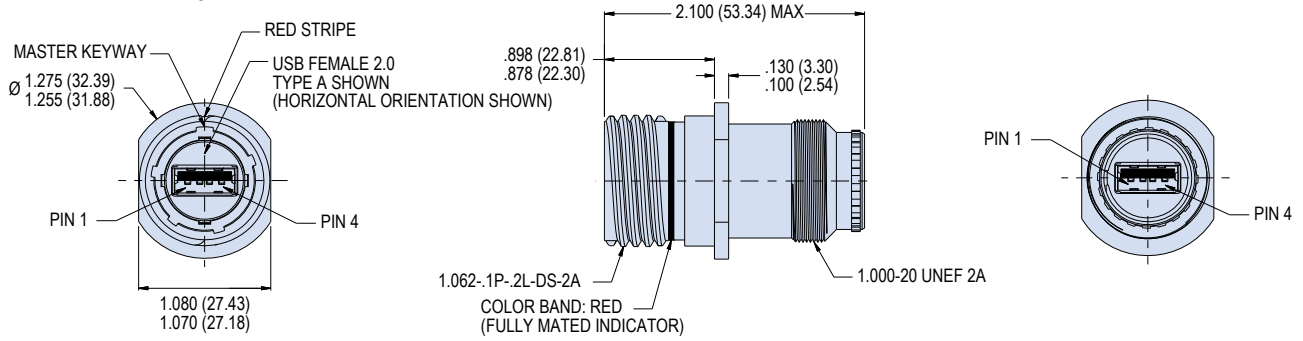

07 - JAM NUT MOUNT RECEPTACLE

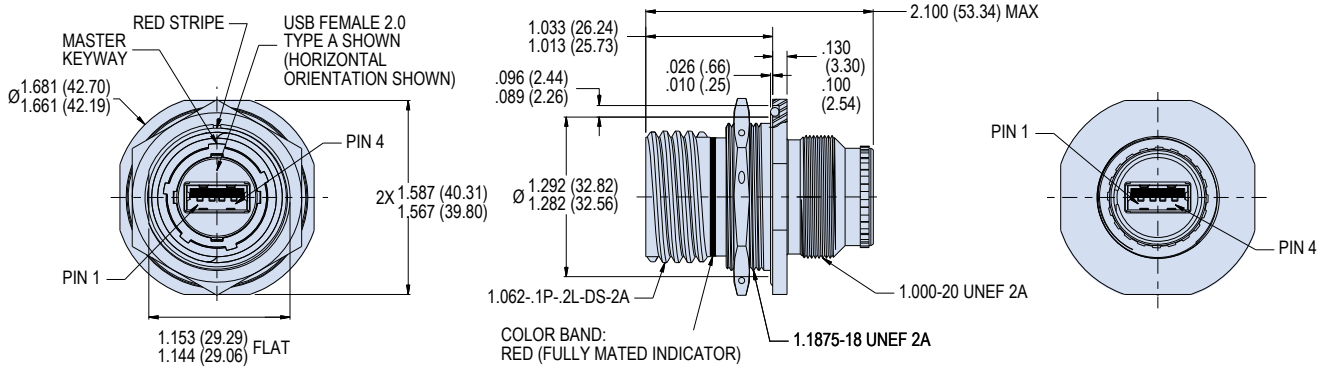

© 2016 Glenair, Inc • 1211 Air Way, Glendale, CA 91201 • 818-247-6000 • www.glenair.com • U.S. CAGE code 06324 • SuperSeal™ Catalog

Dimensions in Inches (millimeters) are subject to change without notice.

USB 2.0 TYPE A

28840 SuperSeal™

900-345 Connector with USB Male (Plug) or Female (Receptacle) to Crimp Removable Contacts

How to Order								
Part Number Example	**900-345**	**NF**	**D0**	**-15**	**2**	**A**	**1**	**H**

Basic Number	**900-345**
Material/Finish	See Material and Finish Options Table
Connector Style	**D0** = Receptacle, Wall Mount **05** = Receptacle, Inline **07** = Receptacle, Jam Nut **G6** = Plug
Shell Size	**15**
USB Performance	**2** = USB 2.0
USB Interface Type	**A** = Type A
Alternate Polarization	**1**, **2**, **3**, **4**, **5**, and **6** See connector specifications page for further information (Per MIL-DTL-28840)
USB Orientation	**H** = Horizontal **V** = Vertical

Material and Finish Options		
Code	**Material**	**Finish Description**
NF	Aluminum	Cadmium O. D. Over Electroless Nickel (500 hour Salt Spray)
ZN		Zinc Nickel, Olive Drab
MT		Nickel-PTFE,1000 Hour Grey™
Z1	Stainless Steel	Passivate
ZU		Black Cadmium Over Nickel
AB	Marine Bronze	None (Clean Only)

USB 2.0 Wiring				
Pin	**Name**	**Cable Color (USB)**	**Description**	**Recommended Wire Sizes (AWG)**
1	(V BUS)	Red	+5 V	22
2	(D-)	White	DATA -	28
3	(D+)	Green	DATA +	28
4	(GND)	Black	GROUND	22

NOTES

1. Connector shall meet general requirements of MIL-DTL-28840. USB connector shall be per USB 2.0 standard.
2. Crimp removable contacts conform to: M39029/56-348 - size 22 socket contacts (supplied loose).Connector meets IP67 in the unmated condition
3. Connector accessory features per M28840 connector designator G. Consult factory for crimp tool and accessory selection.

RECOMMENDED PANEL CUT-OUTS

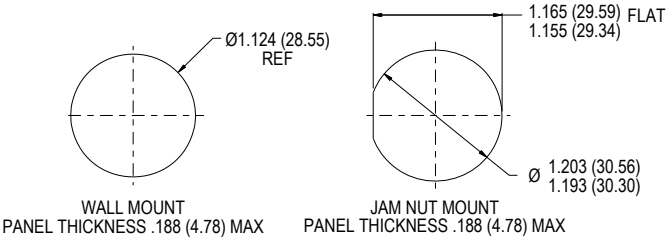

USB ORIENTATION OPTIONS

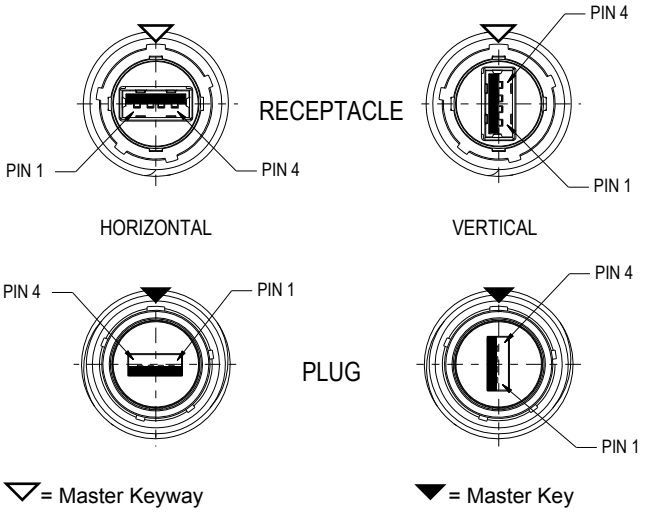

© 2016 Glenair, Inc • 1211 Air Way, Glendale, CA 91201 • 818-247-6000 • www.glenair.com • U.S. CAGE code 06324 • SuperSeal™ Catalog
Dimensions in Inches (millimeters) are subject to change without notice.

900-345 Connector with USB Male (Plug) or Female (Receptacle) to Crimp Removable Contacts

G6 - PLUG

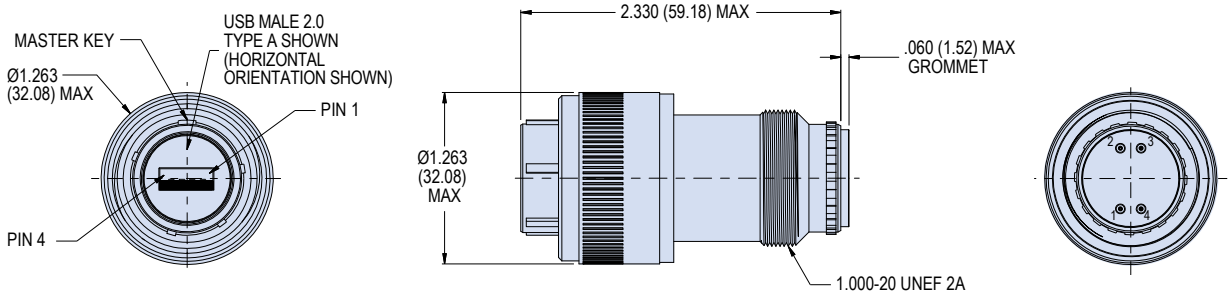

D0 - WALL MOUNT RECEPTACLE

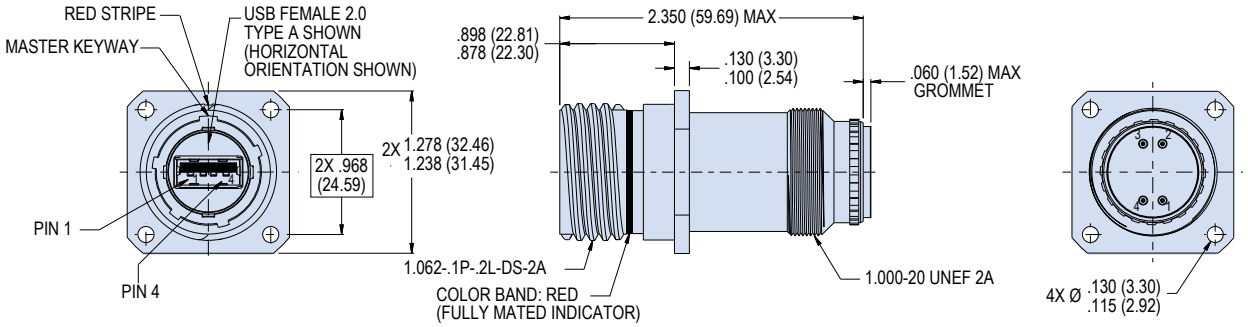

05 - RECEPTACLE, INLINE

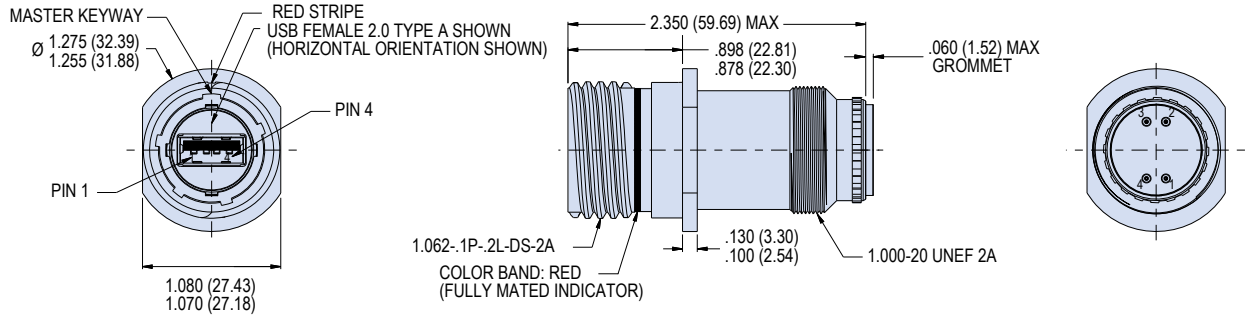

07 - JAM NUT MOUNT RECEPTACLE

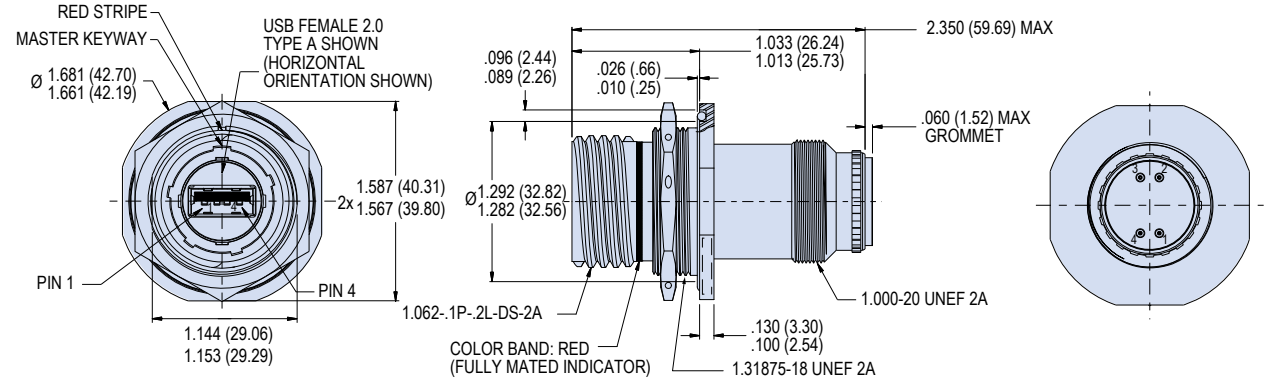

© 2016 Glenair, Inc • 1211 Air Way, Glendale, CA 91201 • 818-247-6000 • www.glenair.com • U.S. CAGE code 06324 • SuperSeal™ Catalog

Dimensions in Inches (millimeters) are subject to change without notice.

SERIES 80
MIGHTY MOUSE
RJ45 ETHERNET

SUPERSEAL™



The harsh environment, light weight, small form factor field Ethernet connector ideally suited for land forces communications and data networking applications



Field ready ruggedized SuperSeal™ Mighty Mouse connectors with USB 2.0 inserts are available for Series 801 with double start ACME thread, Series 804 push/pull connectors, and Series 805 with triple-start ACME thread. All three Series meet IP67 requirements in the open-face condition and are in-line shielded. Mounting styles include In-line, front or rear panel mount square flange with or without clinch nuts, jam-nut and plug connectors. Connectors are offered with RJ45 CAT 5e interfaces and support current ethernet protocols. RJ45 offers separate orientation options in addition to standard Mighty Mouse® keyway position offerings to provide greater control and convenience over the connector engagement. Connectors are available with size #23 crimp contacts, solder cup termination, PC tail termination, pin/socket contacts or Quadrax contact to standard RJ45 interface. Rear accessory options include accessory thread, integrated shrink boot adapter or integrated banding platform.

Glenair®

Glenair, Inc.
1211 Air Way
Glendale, CA 91201-2497
818-247-6000
sales@glenair.com
www.glenair.com

RJ45/USB SUPER SEAL™

RJ45 CAT 5E ETHERNET COMPATIBLE

Series 801, 804 and 805 Mighty Mouse

Product Selection Guide

Glenair®

Series 801

Double-Start Threaded
Mighty Mouse Shell

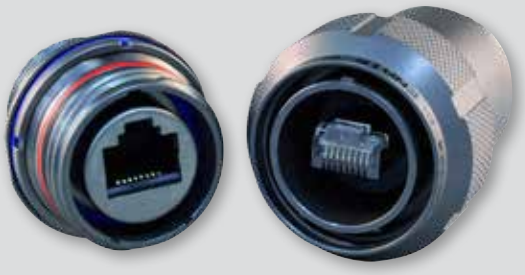

801-300 Page K-2
SuperSeal™ Double-Start Coupler with Accessory Options and RJ45 Jack-to-Jack (Receptacle) or Plug-to-Jack (Plug).

801-301 Page K-4
SuperSeal™ Double-Start Connector with Accessory Options and RJ45 Plug (Plug) or Jack (Receptacle) to Crimp Removable Contacts.

801-302 and 801-303 Page K-6
SuperSeal™ Double-Start Receptacle with RJ45 Jack to PC Tail or Solder Cup Termination.

801-304 Page K-8
SuperSeal™ Double-Start Receptacle Adapter with Accessory Options and Pin/Socket Contacts to RJ45 Jack.

801-305 Page K-10
SuperSeal™ Double-Start Receptacle Adapter with Accessory Options and Quadrax Contacts to RJ45 Jack.

Series 804

Push/Pull
Mighty Mouse Shell



804-300 Page K-12
SuperSeal™ Push/Pull Coupler with Accessory Options and RJ45 Jack-to-Jack (Receptacle) or Plug-to-Jack (Plug).

804-301 Page K-14
SuperSeal™ Push/Pull Connector with Accessory Options and RJ45 Plug (Plug) or Jack (Receptacle) to Crimp Removable Contacts.

804-302 and 804-303 Page K-16
SuperSeal™ Push/Pull Receptacle with RJ45 Jack-to-PC Tail or Solder Cup Termination.

804-305 Page K-18
SuperSeal™ Push/Pull Receptacle Adapter with Accessory Options and Quadrax Contacts to RJ45 Jack.

Series 805

Triple-Start Threaded
Mighty Mouse Shell



805-300 Page K-20
SuperSeal™ Triple-Start Coupler with Accessory Options and RJ45 Jack-to-Jack (Receptacle) or Plug-to-Jack (Plug) .

805-301 Page K-22
SuperSeal™ Triple-Start Connector with Accessory Options and RJ45 Plug (Plug) or Jack (Receptacle) to Crimp Removable Contacts.

805-302 Page K-24
SuperSeal™ Triple-Start Receptacle with RJ45 Jack to PC Tail Termination.

805-303 Page K-26
SuperSeal™ Triple-Start Receptacle with RJ45 Jack to Solder Cup Termination.

K

© 2016 Glenair, Inc • 1211 Air Way, Glendale, CA 91201 • 818-247-6000 • www.glenair.com • U.S. CAGE code 06324 • SuperSeal™ Catalog
Dimensions in Inches (millimeters) are subject to change without notice.

RJ45 CAT 5E ETHERNET COMPATIBLE

Series 801, 804 and 805 Mighty Mouse

801-300 Double-Start Coupler with RJ45 Jack-to-Jack (Receptacle) or Plug-to-Jack (Plug)

How To Order									
Sample Part Number	**801-300**	**-**	**NF**	**07**	**G**	**17**	**5H**	**A**	**1**

Series	**801-300** = plug (plug) or jack (receptacle) to jack
Rear Accessory Option	**–** = Accessory Thread and Teeth **S** = Integral Banding Platform **B** = Integral Boot Adapter
Material and Finish[1]	**NF** = Aluminum/Cadmium, Olive Drab **M** = Aluminum/Electroless Nickel **MT** = Aluminum/Nickel PTFE **ZNU** = Aluminum/Black Zinc Nickel
Shell Style[1]	**01** = In Line Receptacle **02** = Front or Rear Panel Mount Square Flange Receptacle **07** = Rear Panel Mount Jam Nut Receptacle **26** = Plug
Grounding	**–** = Inline Shielded **G** = Inline Shielded and Grounded to Shell, Receptacle Only[2]
Shell Size	**17** = Shell Size 17 **19** = Shell Size 19
RJ45 Category	**5H** = Cat 5E For Cat 6A applications consult factory
Aternate Key Positions[1]	**A**, **B**, **C**, **D**, **E**, **F**
RJ45 Orientation	**1**, **2**, **3**, **4**

NOTES

1. See Section A for recommended panel cutout dimensions, additional finishes and alternate keyway positions.
2. G option is inline shielded and grounded to shell, receptacle only
3. Meets IP67 sealing requirement in unmated condition

RJ45 ORIENTATION OPTIONS

Plug ▼ = Master Key

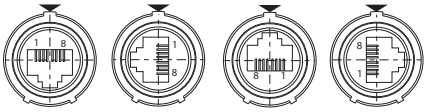

Receptacle ▼ = Master Keyway

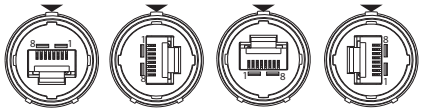

Receptacle Dimensions																			
Shell Size	Ø A		B Flat		C Threads	D Threads	Ø E		F SQ		G BSC		Ø J		K Flat		M Threads	Ø N	
	in	mm	in	mm			in	mm	in	mm	in	mm	in	mm	in	mm		in	mm
17	1.110	28.19	1.070	27.18	1.0625-.1P-.2L-DS-2A	.9375-20 UNEF-2A	1.700	43.18	1.280	32.51	1.060	26.92	1.325	33.66	1.290	32.77	1.1250-28 UN-2A	0.850	21.59
19	1.243	31.57	1.191	30.25	1.1875-.1P-.2L-DS-2A	1.0625-18 UNEF-2A	1.900	48.26	1.432	36.37	1.191	30.25	1.450	36.83	1.415	35.94	1.2500-28 UN-2A	1.003	25.48

SHELL STYLE 01 INLINE RECEPTACLE

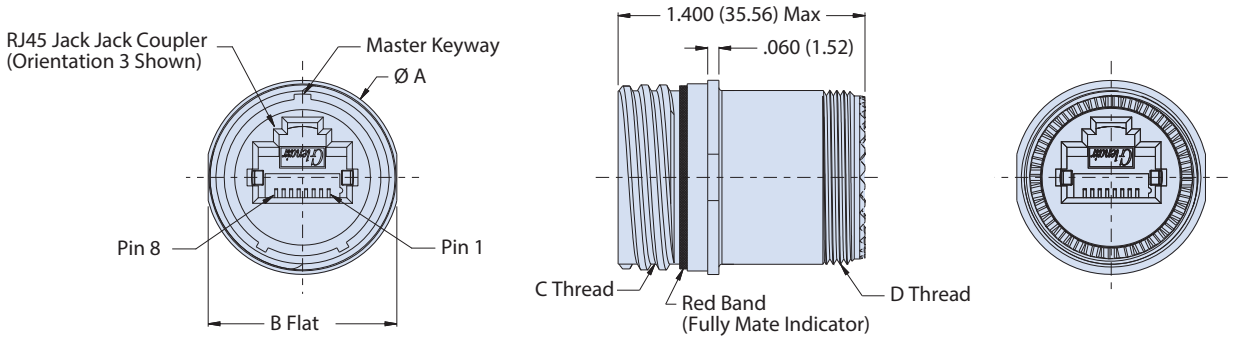

© 2016 Glenair, Inc • 1211 Air Way, Glendale, CA 91201 • 818-247-6000 • www.glenair.com • U.S. CAGE code 06324 • SuperSeal™ Catalog
Dimensions in Inches (millimeters) are subject to change without notice.

Series 801, 804 and 805 Mighty Mouse

801-300 Double-Start Coupler with RJ45 Jack-to-Jack (Receptacle) or Plug-to-Jack (Plug)

SHELL STYLE 02 FRONT OR REAR PANEL MOUNT SQUARE FLANGE RECEPTACLE

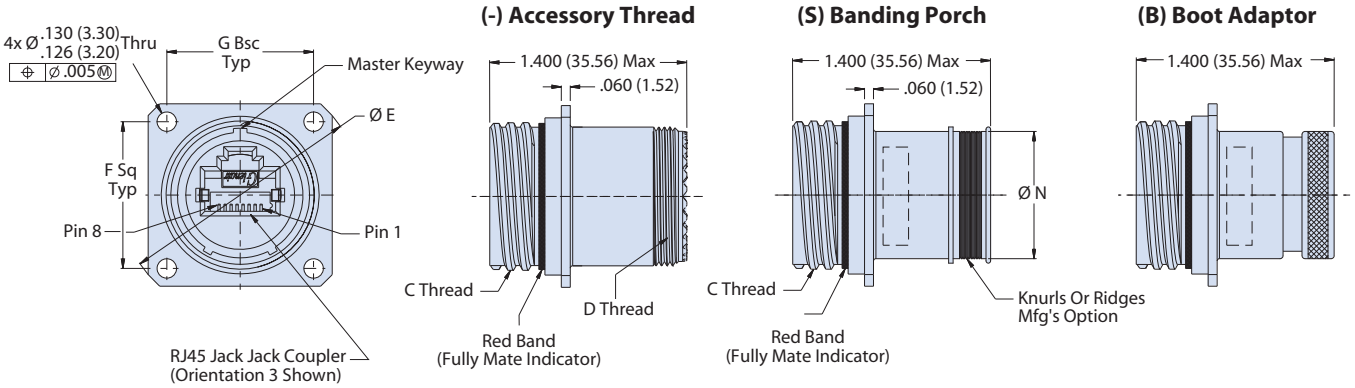

SHELL STYLE 07 REAR PANEL MOUNT JAM NUT RECEPTACLE

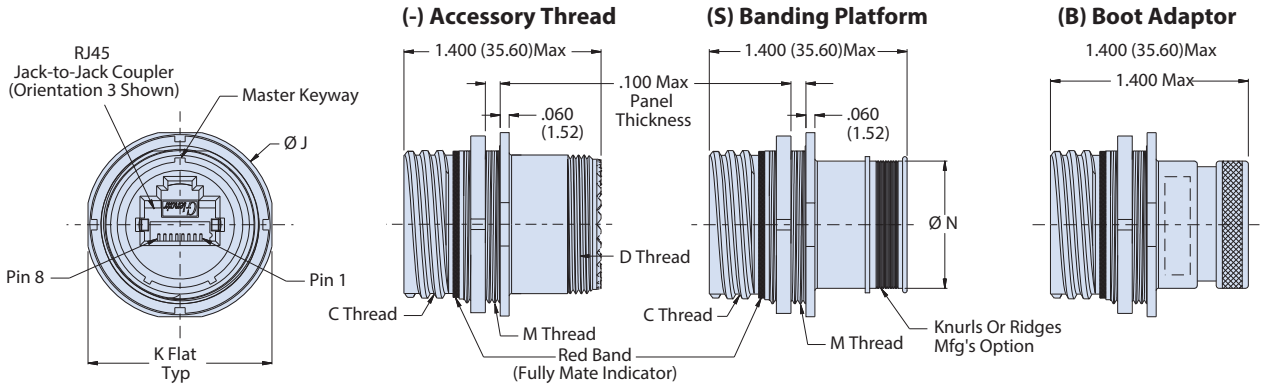

SHELL STYLE 26 PLUG

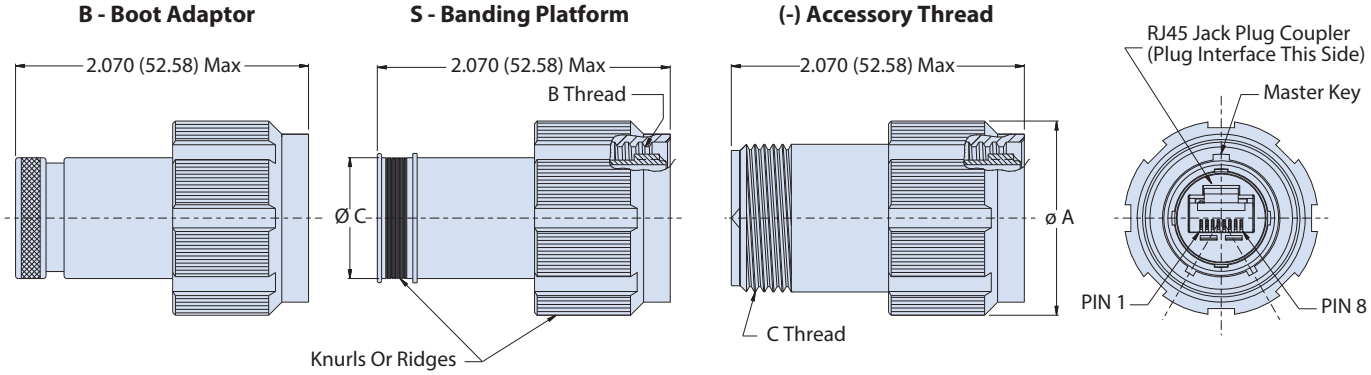

Plug Dimensions			
Shell Size	Ø A	B Threads	C Threads
17	1.450 (36.83)	1.0625-.1P-.2L-DS-2B	.9375-20 UNEF-2A
19	1.500 (38.1)	1.0625-.1P-.2L-DS-2B	1.0625-18 UNEF-2A

© 2016 Glenair, Inc • 1211 Air Way, Glendale, CA 91201 • 818-247-6000 • www.glenair.com • U.S. CAGE code 06324 • SuperSeal™ Catalog
Dimensions in Inches (millimeters) are subject to change without notice.

RJ45/USB SUPER SEAL™

RJ45 CAT 5E ETHERNET COMPATIBLE

Series 801, 804 and 805 Mighty Mouse

801-301 Double-Start Connector with RJ45 Plug (Plug) or Jack (Receptacle) to Crimp Removable Contacts

Glenair®

How To Order

Sample Part Number	801-301	-	NF	07	G	19	5H	A	1

Series	**801-301**
Rear Accessory Option	**–** = Accessory Thread and Teeth **B** = Integral Boot Adapter **S** = Integral Banding Platform
Material and Finish[1]	**NF** = Al/Cadmium, Olive Drab **M** = Al/Electroless Nickel **MT** = Al/Nickel PTFE **ZNU** = Al/Black Zinc Nickel
Shell Style[1]	**01** = In Line Receptacle **02** = Front or Rear Panel Mount Square Flange Receptacle **07** = Rear Panel Mount Jam Nut Receptacle **26** = Plug
Grounding[2]	**–** = Inline Shielded **G** = Shielded and grounded to shell
Shell Size	**17** = Shell Size 17 **19** = Shell Size 19
RJ45 Category	**5H** = Cat 5E For Cat 6A applications consult factory
Aternate Key Positions[1]	**A**, **B**, **C**, **D**, **E**, **F**
RJ45 Orientation	**1**, **2**, **3**, **4**

RJ45 ORIENTATION OPTIONS

Plug ▼ = Master Key

CODE 1 CODE 2 CODE 3 CODE 4

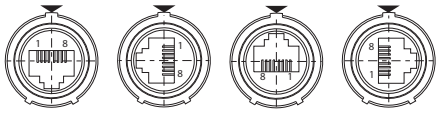

Receptacle ▼ = Master Keyway

CODE 1 CODE 2 CODE 3 CODE 4

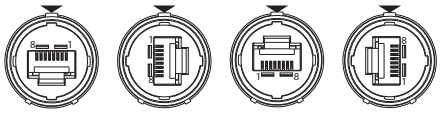

NOTES

1. See Section A for recommended panel cutout dimensions, additional finishes and alternate keyway positions.
2. G option is inline shielded and grounded to shell, receptacle only
3. Meets IP67 sealing requirement in unmated condition
4. Supplied with size 23 socket contacts (809-002 supplied loose) 1 extra contact provided

Receptacle Dimensions

Shell Size	Ø A in	Ø A mm	B Flat in	B Flat mm	C Threads	D Threads	Ø E in	Ø E mm	F SQ in	F SQ mm	G BSC in	G BSC mm	Ø J in	Ø J mm	K Flat in	K Flat mm	M Threads	Ø N in	Ø N mm
17	1.110	28.19	1.070	27.18	1.0625-.1P-.2L-DS-2A	.9375-20 UNEF-2A	1.700	43.18	1.280	32.51	1.060	26.92	1.325	33.66	1.290	32.77	1.1250-28 UN-2A	0.850	21.59
19	1.243	31.57	1.191	30.25	1.1875-.1P-.2L-DS-2A	1.0625-18 UNEF-2A	1.900	48.26	1.432	36.37	1.191	30.25	1.450	36.83	1.415	35.94	1.2500-28 UN-2A	1.003	25.48

SHELL STYLE 01 IN-LINE RECEPTACLE

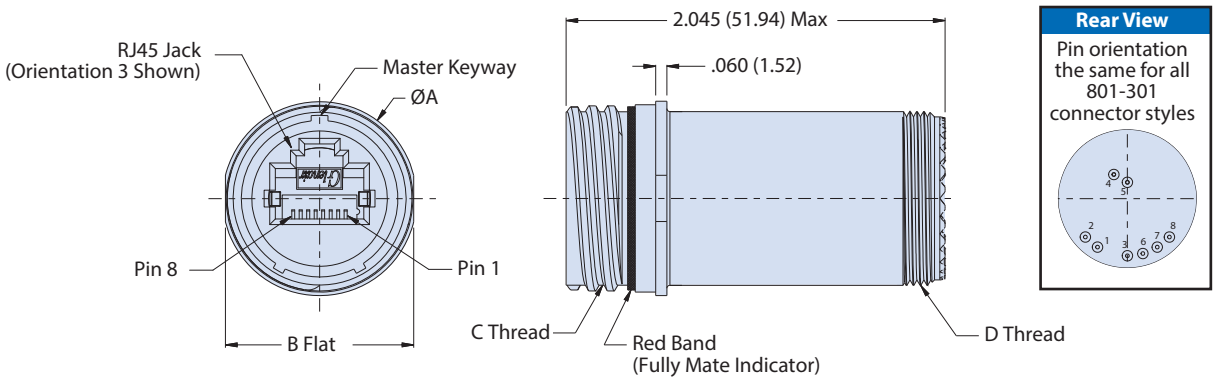

© 2016 Glenair, Inc • 1211 Air Way, Glendale, CA 91201 • 818-247-6000 • www.glenair.com • U.S. CAGE code 06324 • SuperSeal™ Catalog
Dimensions in Inches (millimeters) are subject to change without notice.

801-301 Double-Start Connector with RJ45 Plug (Plug) or Jack (Receptacle) to Crimp Removable Contacts

SHELL STYLE 02 FRONT OR REAR PANEL MOUNT SQUARE FLANGE RECEPTACLE

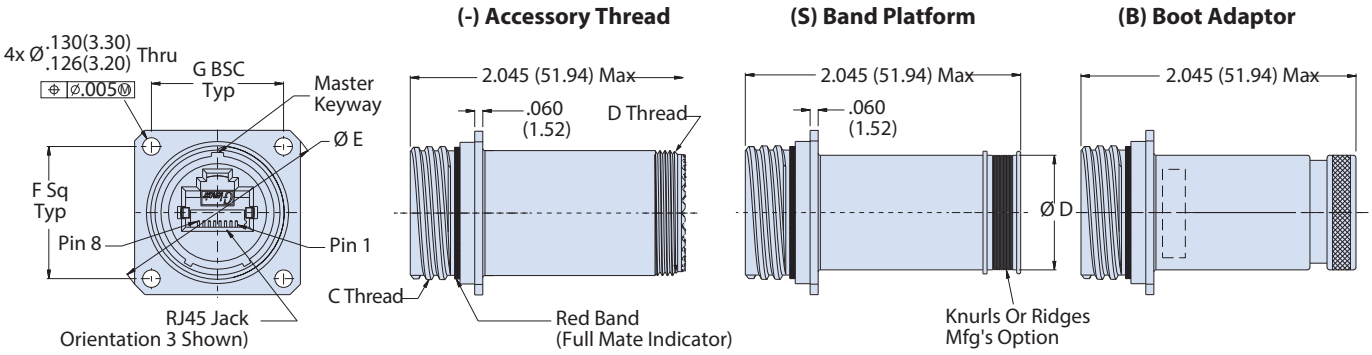

SHELL STYLE 07 REAR PANEL MOUNT JAM NUT RECEPTACLE

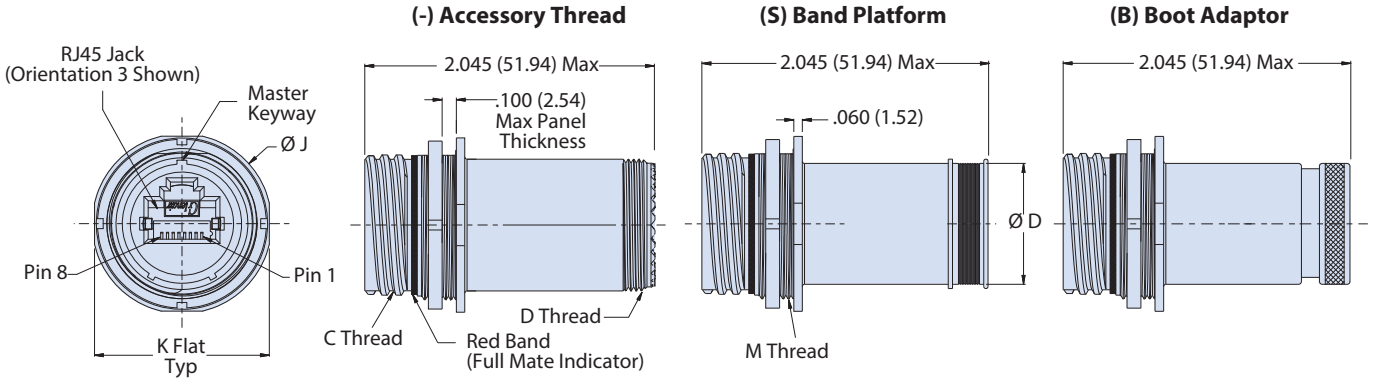

SHELL STYLE 26 PLUG

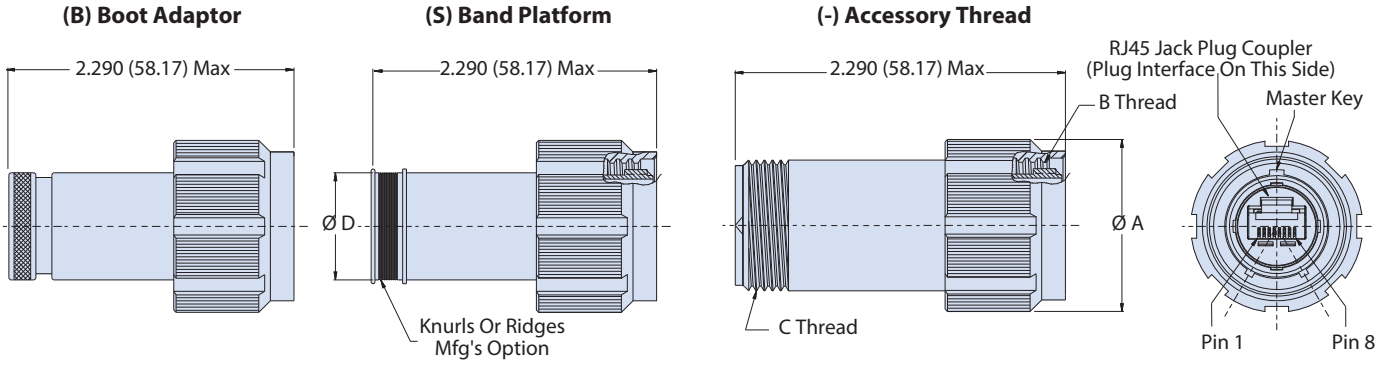

Plug Dimensions			
Shell Size	Ø A	B Threads	Ø C
17	1.450 (36.83)	1.0625-.1P-.2L-DS-2B	.850 (21.59)
19	1.560 (39.62)	1.1875-.1P-.2L-DS-2B	1.003 (25.48)

© 2016 Glenair, Inc • 1211 Air Way, Glendale, CA 91201 • 818-247-6000 • www.glenair.com • U.S. CAGE code 06324 • SuperSeal™ Catalog
Dimensions in Inches (millimeters) are subject to change without notice.

RJ45 CAT 5E ETHERNET COMPATIBLE

Series 801, 804 and 805 Mighty Mouse

801-302 or 801-303 Double-Start Receptacle with RJ45 Jack to PC Tail or Solder Cup Termination

How To Order								
Sample Part Number	**801-302**	**NF**	**07**	**-**	**17**	**5H**	**A**	**1**

Series	**801-302** = PC Tail **801-303** = Solder Cup
Material and Finish[1]	**NF** = Aluminum/Cadmium, Olive Drab **M** = Aluminum/Electroless Nickel **MT** = Aluminum/Nickel PTFE **ZNU** = Aluminum/Black Zinc Nickel
Shell Style[1]	**02** = Front or Rear, Square Flange Panel Mount Receptacle **07** = Jam Nut Receptacle, Rear Panel Mount
Grounding	**-** = Inline Shielded **G** = Shielded and grounded to shell For improved 360° shielding performance select shell size 19
Shell Size	**17** = Shell Size 17 **19** = Shell Size 19
RJ45 Category	**5H** = Cat 5E For Cat 6A applications consult factory
Aternate Key Positions[1]	**A**, **B**, **C**, **D**, **E**, **F**
RJ45 Orientation	**1**, **2**, **3**, **4**

RJ45 ORIENTATION OPTIONS AND PCB FOOTPRINTS*

(PARTIAL VIEWS SHOWN)

CODE 1

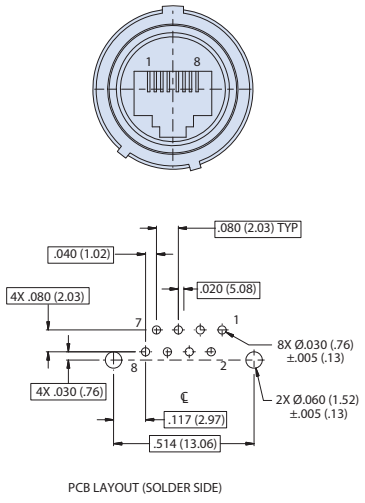

PCB LAYOUT (SOLDER SIDE)

CODE 2

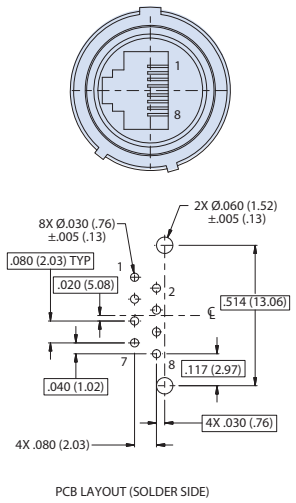

PCB LAYOUT (SOLDER SIDE)

CODE 3

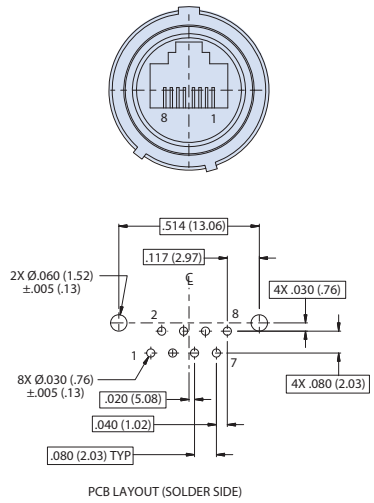

PCB LAYOUT (SOLDER SIDE)

CODE 4

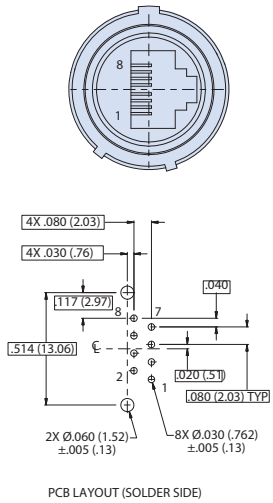

PCB LAYOUT (SOLDER SIDE)

*PCB footprints apply to 801-302 PC tail connectors only. Orientation codes apply to 801-302 and 801-303

Receptacle Dimensions																
Shell Size	Ø A		B Flat		C Threads	Ø E		F SQ		G BSC		Ø J		K Flat		M Threads
	in	mm	in	mm		in	mm	in	mm	in	mm	in	mm	in	mm	
17	1.110	28.19	1.070	27.18	1.0625-.1P-.2L-DS-2A	1.700	43.18	1.280	32.51	1.060	26.92	1.325	33.66	1.290	32.77	1.1250-28 UN-2A
19	1.243	31.57	1.191	30.25	1.1875-.1P-.2L-DS-2A	1.900	48.26	1.432	36.37	1.191	30.25	1.450	36.83	1.415	35.94	1.2500-28 UN-2A

© 2016 Glenair, Inc • 1211 Air Way, Glendale, CA 91201 • 818-247-6000 • www.glenair.com • U.S. CAGE code 06324 • SuperSeal™ Catalog
Dimensions in Inches (millimeters) are subject to change without notice.

Series 801, 804 and 805 Mighty Mouse

801-302 or 801-303 Double-Start Receptacle with RJ45 Jack to PC Tail or Solder Cup Termination

SHELL STYLE 07 JAM NUT RECEPTACLE FOR 801-302 PC TAIL AND 801-303 SOLDER CUP

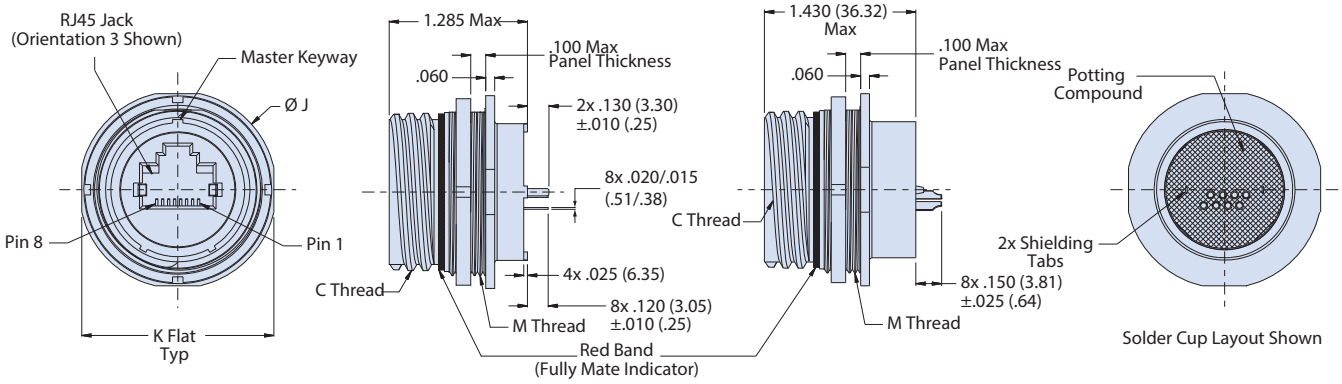

801-302
PC Tail

801-303
Solder Cup

SHELL STYLE 02 SQUARE FLANGE RECEPTACLE FOR 801-302 PC TAIL AND 801-303 SOLDER CUP

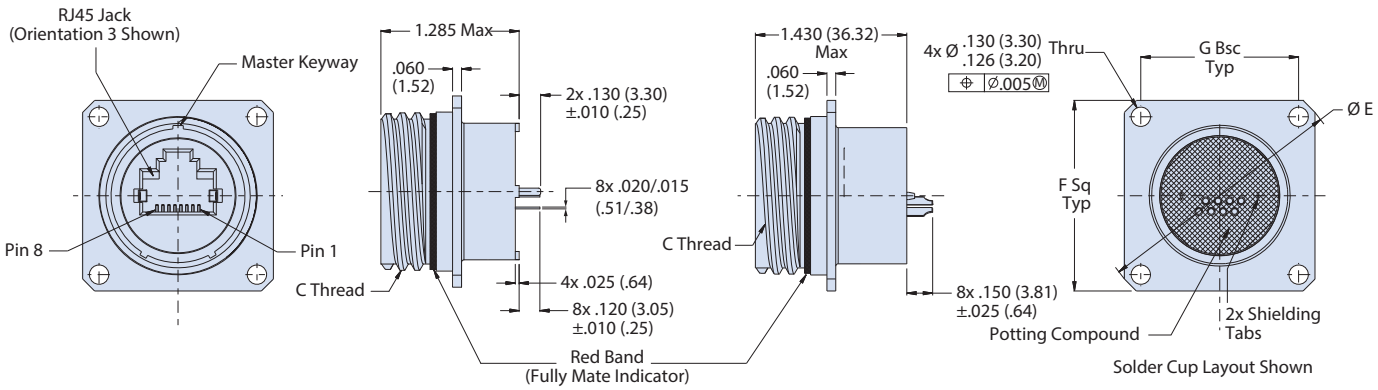

801-302
PC Tail

801-303
Solder Cup

NOTES

1. See Section A for recommended panel cutout dimensions, additional finishes and alternate keyway positions.
2. Meets IP67 sealing requirement in unmated condition
3. Material and Finish
   - Shell, jam nut: al alloy or cres
   - Seal/o-ring: fluoorosilicone
   - Sealant: RTV

© 2016 Glenair, Inc • 1211 Air Way, Glendale, CA 91201 • 818-247-6000 • www.glenair.com • U.S. CAGE code 06324 • SuperSeal™ Catalog
Dimensions in Inches (millimeters) are subject to change without notice.

RJ45/USB SUPER SEAL™

RJ45 CAT 5E ETHERNET COMPATIBLE

Series 801, 804 and 805 Mighty Mouse

801-304 Double-Start Receptacle Adapter with Pin/Socket Contacts to RJ45 Jack

Glenair®

How To Order

Sample Part Number	801-304	-	NF	07	17	-	85	P	5H	A

Series	**801-304** = Pin/Socket to RJ45 Jack
Rear Accessory Option	**–** = Accessory Thread and Teeth **B** = Integral Boot Adapter **S** = Integral Banding Platform
Material and Finish[1]	**NF** = Aluminum/Cadmium, Olive Drab **M** = Aluminum/Electroless Nickel **MT** = Aluminum/Nickel PTFE **ZNU** = Aluminum/Black Zinc Nickel
Shell Style[1]	**01** = In Line Receptacle **02** = Front or Rear Panel Mount Square Flange Receptacle **07** = Rear Panel Mount Jam Nut Receptacle **26** = Plug
Shell Size	**17** = Shell Size 17 **19** = Shell Size 19
Grounding	**-** = Inline Shielded **G** = Shielded and grounded to shell For improved 360° shielding performance select shell size 19
Insert Arrangement[3]	**85** = 17-85 per Mighty Mouse Inserts **100** = 19-100 per Mighty Mouse Inserts
Contact Style	**P** = Pin **S** = Socket
RJ45 Category	**5H** = Cat 5E For Cat 6A applications consult factory
Aternate Key Positions[1]	**A, B, C, D, E, F**

WIRING DIAGRAM FOR ETHERNET 1000base-T (Gigabit ethernet)
(COLOR CODES PER EIA/TIA 568B)

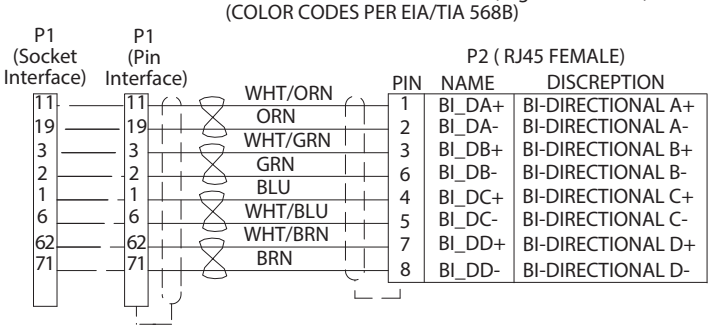

WIRING DIAGRAM FOR ETHERNET 10base-T and 100 base-TX
(COLOR CODES PER EIA/TIA 568B)

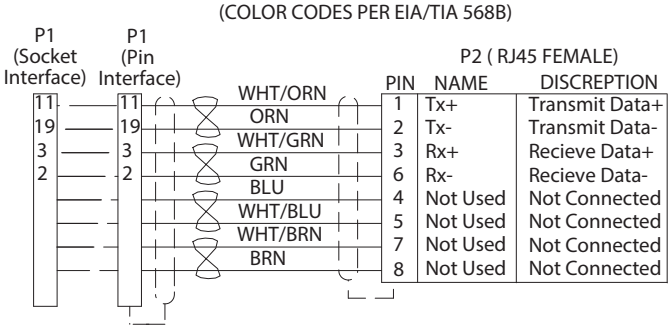

Receptacle Dimensions

Shell Size	Ø A in	Ø A mm	B Flat in	B Flat mm	C Threads	D Threads	Ø E in	Ø E mm	F SQ in	F SQ mm	G BSC in	G BSC mm	Ø J in	Ø J mm	K Flat in	K Flat mm	M Threads	Ø N in	Ø N mm
17	1.110	28.19	1.070	27.18	1.0625-.1P-.2L-DS-2A	.9375-20 UNEF-2A	1.700	43.18	1.280	32.51	1.060	26.92	1.325	33.66	1.290	32.77	1.1250-28 UN-2A	0.850	21.59
19	1.243	31.57	1.191	30.25	1.1875-.1P-.2L-DS-2A	1.0625-18 UNEF-2A	1.900	48.26	1.432	36.37	1.191	30.25	1.450	36.83	1.415	35.94	1.2500-28 UN-2A	1.003	25.48

NOTES

1. See Section A for recommended panel cutout dimensions, additional finishes and alternate keyway positions.
2. Meets IP67 sealing requirement in unmated condition.
3. In accordance with Mighty Mouse insert arrangement 17-85 or 19-100 consult factory for other arrangements options.
4. Material/Finishes:
   - Shell, jam nut: al alloy or cres
   - seal/o-ring: fluorosilicone

SHELL STYLE 01 IN-LINE RECEPTACLE

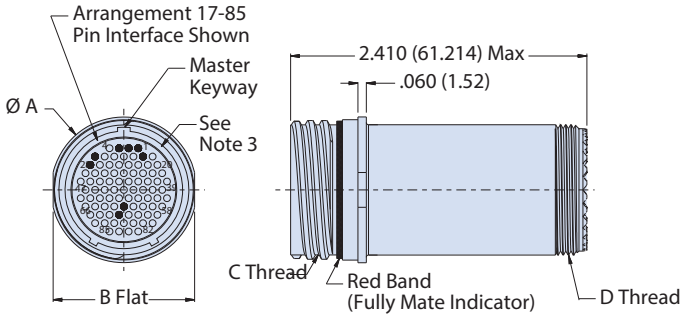

Rear View

Pin Position is the same for all styles

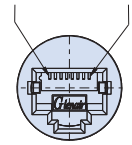

© 2016 Glenair, Inc • 1211 Air Way, Glendale, CA 91201 • 818-247-6000 • www.glenair.com • U.S. CAGE code 06324 • SuperSeal™ Catalog
Dimensions in Inches (millimeters) are subject to change without notice.

SHELL STYLE 02 FRONT OR REAR PANEL MOUNT SQUARE FLANGE RECEPTACLE

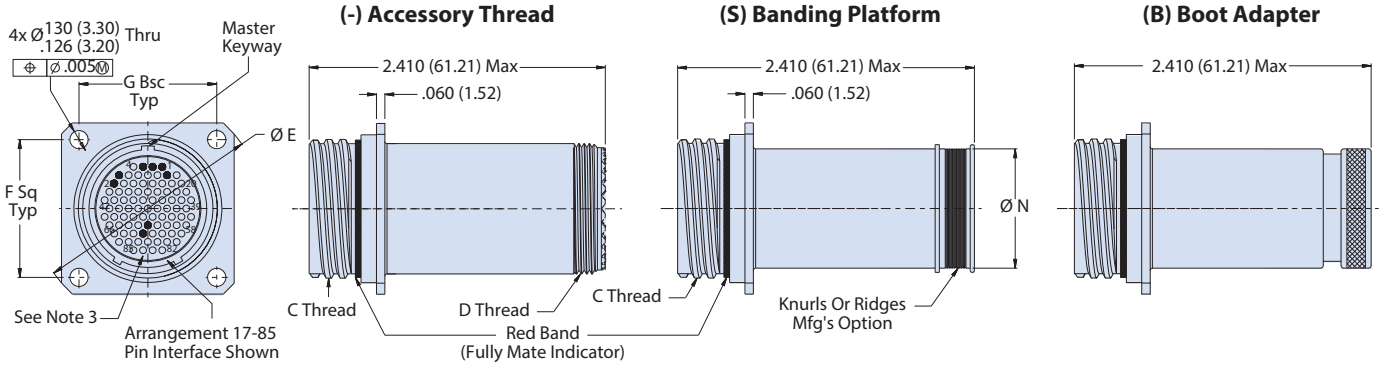

SHELL STYLE 07 REAR PANEL MOUNT JAM NUT RECEPTACLE

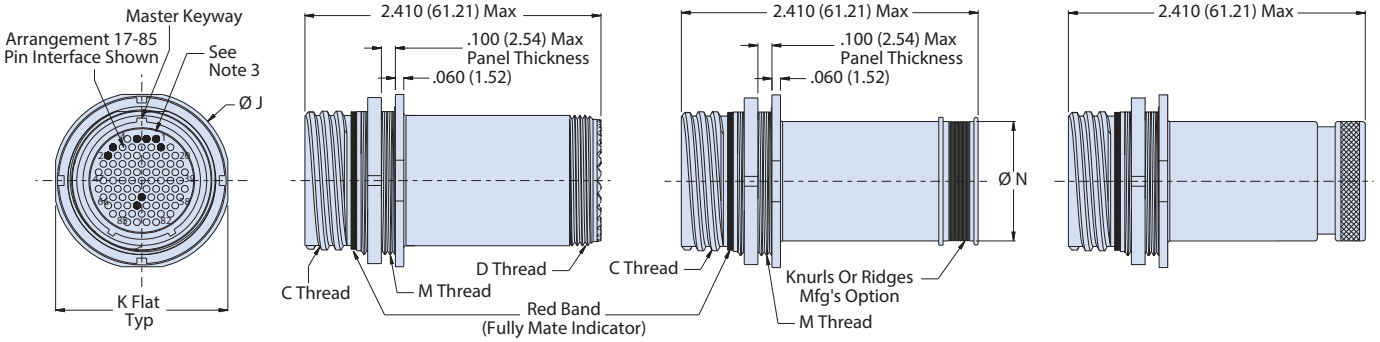

SHELL STYLE 26 PLUG

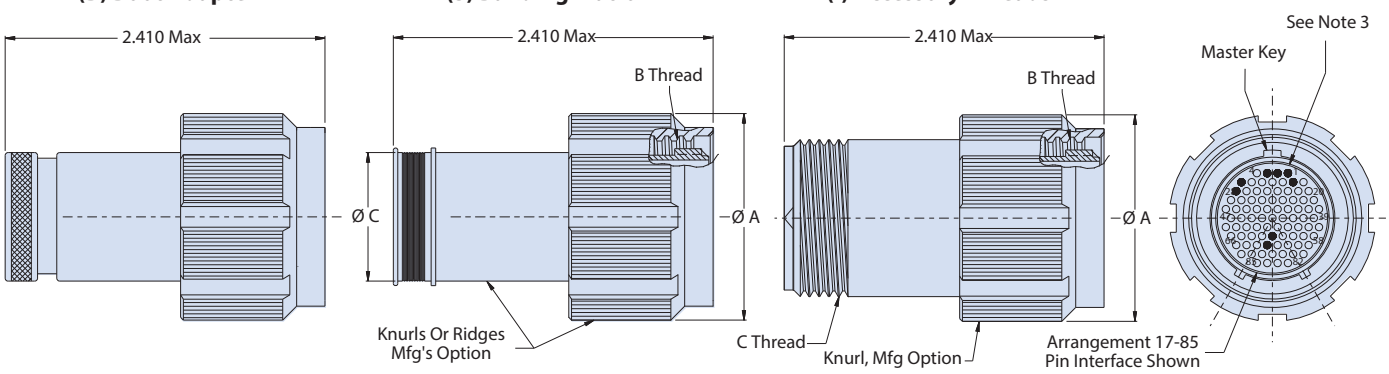

Plug Dimensions			
Shell Size	**Ø A**	**B Threads**	**C Threads**
17	1.450 (36.83)	1.0625-.1P-.2L-DS-2B	.9375-20 UNEF-2A
19	1.560 (39.62)	1.1875-.1P-.2L-DS-2B	1.0625-18 UNEF-2A

© 2016 Glenair, Inc • 1211 Air Way, Glendale, CA 91201 • 818-247-6000 • www.glenair.com • U.S. CAGE code 06324 • SuperSeal™ Catalog
Dimensions in Inches (millimeters) are subject to change without notice.

RJ45 CAT 5E ETHERNET COMPATIBLE

Series 801, 804 and 805 Mighty Mouse

801-305 Double-Start Receptacle Adapter with Quadrax Contacts to RJ45 Jack

How To Order

Sample Part Number	801-305	-	NF	07	G	17	5H	P	A

Series	**801-305** Quadrax to RJ45 Jack
Rear Accessory Option	**–** = Accessory Thread and Teeth **B** = Integral Boot Adapter **S** = Integral Banding Platform
Material and Finish[1]	**NF** = Aluminum/Cadmium, Olive Drab **M** = Aluminum/Electroless Nickel **MT** = Aluminum/Nickel PTFE **ZNU** = Aluminum/Black Zinc Nickel
Shell Style[1]	**01** = In Line Receptacle **26** = Plug **02** = Front or Rear Panel Mount Square Flange Receptacle **07** = Rear Panel Mount Jam Nut Receptacle
Grounding	**-** = Inline Shielded **G** = Shielded and grounded to shell For improved 360° shielding performance select shell size 19
Shell Size	**17** = Shell Size 17 **19** = Shell Size 19
RJ45 Category	**5H** = Cat 5E; For Cat 6A applications consult factory
Contact Style[3]	**P** = Pin **S** = Socket
Alternate Key Positions[1]	**A, B, C, D, E, F**

WIRING DIAGRAMS

FOR ETHERNET 10base-T & 100 base-TX
(COLOR CODES PER EIA/TIA 568B)

P1 (CONNECTOR INTERFACE)
2 QUADRAX CONTACTS 1, 2, 3 & 4

P2 (RJ45 FEMALE)

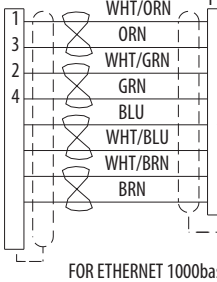

PIN	NAME	DESCRIPTION
1	TX+	TRANSMIT DATA+
2	TX-	TRANSMIT DATA-
3	RX+	RECIEVE DATA+
6	RX-	RECIEVE DATA-
4	NOT USED	NOT CONNECTED
5	NOT USED	NOT CONNECTED
7	NOT USED	NOT CONNECTED
8	NOT USED	NOT CONNECTED

FOR ETHERNET 1000base-T (Gigabit ethernet)
(COLOR CODES PER EIA/TIA 568B)

P1 (CONNECTOR INTERFACE)
2 QUADRAX CONTACTS, A & B

P2 (RJ45 FEMALE)

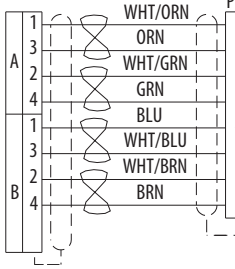

PIN	NAME	DESCRIPTION
1	BI_DA+	BI-DIRECTIONAL A+
2	BI_DA-	BI-DIRECTIONAL A-
3	BI_DB+	BI-DIRECTIONAL B+
6	BI_DB-	BI-DIRECTIONAL B-
4	BI_DC+	BI-DIRECTIONAL C+
5	BI_DC-	BI-DIRECTIONAL C-
7	BI_DD+	BI-DIRECTIONAL D+
8	BI_DD-	BI-DIRECTIONAL D-

PARTIAL VIEW OF CONNECTOR QUADRAX INTERFACE

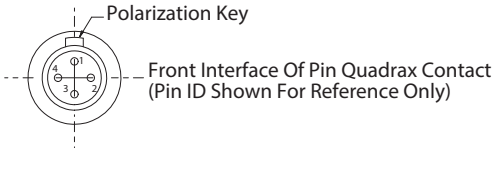

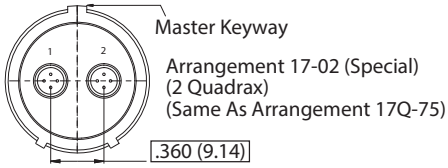

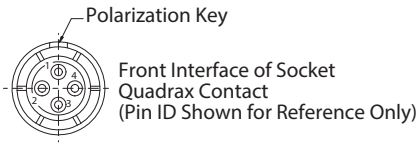

Receptacle Dimensions

Shell Size	Ø A in	Ø A mm	B Flat in	B Flat mm	C Threads	D Threads	Ø E in	Ø E mm	F SQ in	F SQ mm	G BSC in	G BSC mm	Ø J in	Ø J mm	K Flat in	K Flat mm	M Threads	Ø N in	Ø N mm
17	1.110	28.19	1.070	27.18	1.0625-.1P-.2L-DS-2A	.9375-20 UNEF-2A	1.700	43.18	1.280	32.51	1.060	26.92	1.325	33.66	1.290	32.77	1.1250-28 UN-2A	0.850	21.59
19	1.243	31.57	1.191	30.25	1.1875-.1P-.2L-DS-2A	1.0625-18 UNEF-2A	1.900	48.26	1.432	36.37	1.191	30.25	1.450	36.83	1.415	35.94	1.2500-28 UN-2A	1.003	25.48

NOTES

1. See Section A for recommended panel cutout dimensions, additional finishes and alternate keyway positions.
2. Meets IP67 sealing requirement in unmated condition.
3. Pin contact shall mate with Glenair socket contact P/N 854-002-XX. Socket contact shall mate with Glenair pin contact P/N 854-001-XX. Contact factory for more information.

SHELL STYLE 01 IN-LINE RECEPTACLE

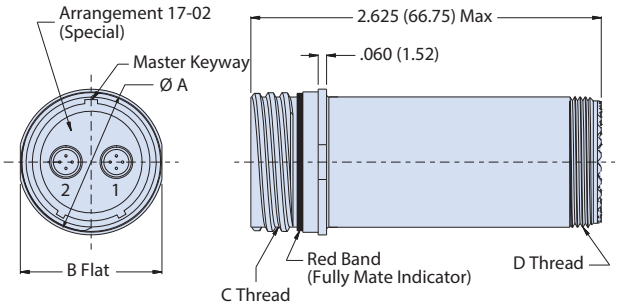

Rear View

Orientation and pin position apply to all connector styles.

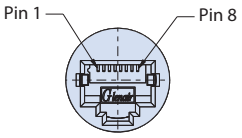

© 2016 Glenair, Inc • 1211 Air Way, Glendale, CA 91201 • 818-247-6000 • www.glenair.com • U.S. CAGE code 06324 • SuperSeal™ Catalog
Dimensions in Inches (millimeters) are subject to change without notice.

SHELL STYLE 02 FRONT OR REAR PANEL MOUNT SQUARE FLANGE RECEPTACLE

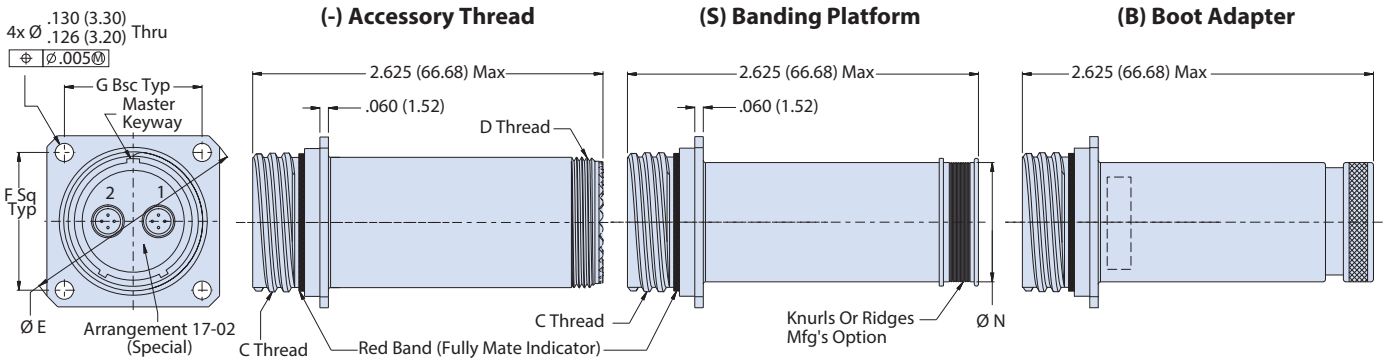

SHELL STYLE 07 REAR PANEL MOUNT JAM NUT RECEPTACLE

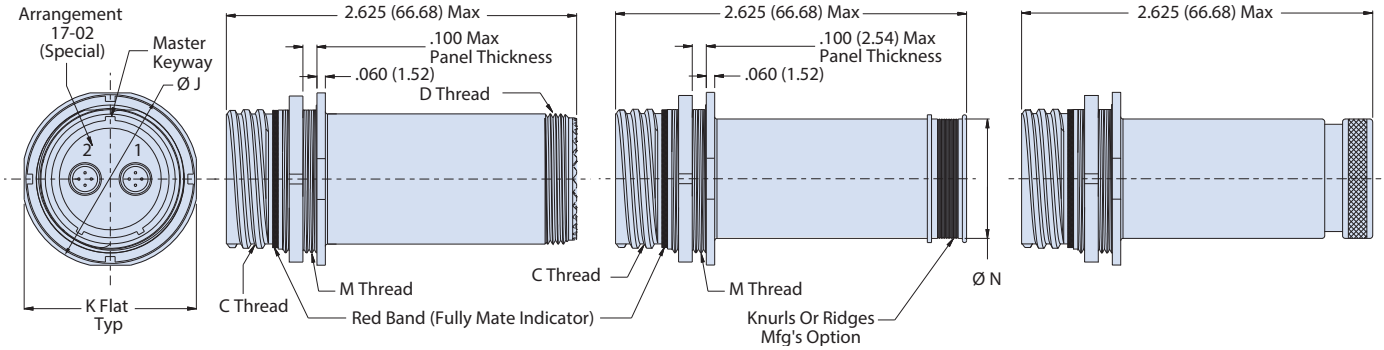

SHELL STYLE 26 PLUG

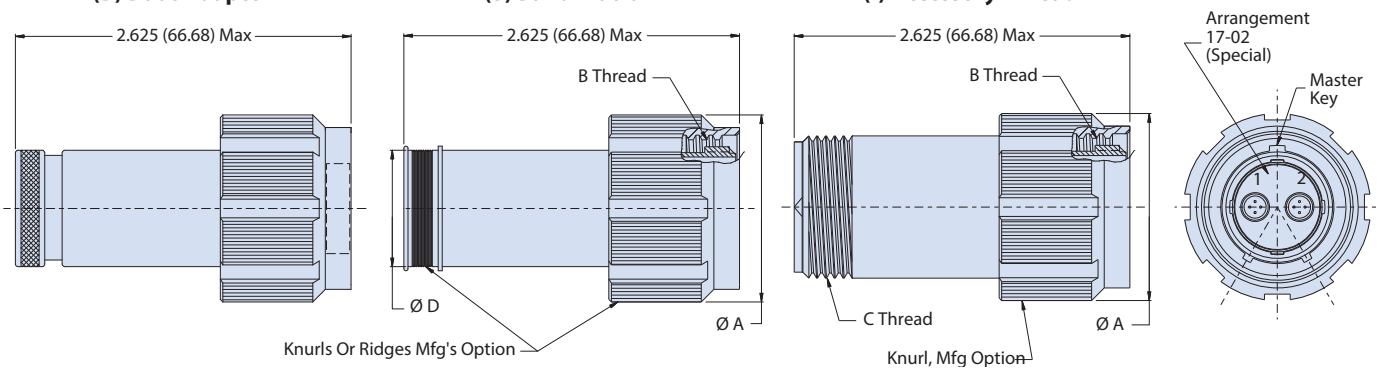

Plug Dimensions				
Shell Size	Ø A	B Threads	C Threads	ØD
17	1.450 (36.83)	1.0625-.1P-.2L-DS-2B	.9375-20 UNEF-2A	.850 (21.59)
19	1.560 (39.62)	1.1875-.1P-.2L-DS-2B	1.0625-18 UNEF-2A	1.003 (25.48)

© 2016 Glenair, Inc • 1211 Air Way, Glendale, CA 91201 • 818-247-6000 • www.glenair.com • U.S. CAGE code 06324 • SuperSeal™ Catalog
Dimensions in Inches (millimeters) are subject to change without notice.

RJ45 CAT 5E ETHERNET COMPATIBLE

Series 801, 804 and 805 Mighty Mouse

804-300 Push/Pull Coupler with RJ45 Jack-to-Jack (Receptacle) or Plug-to-Jack (Plug)

How To Order									
Sample Part Number	**804-300**	**-**	**NF**	**07**	**G**	**16**	**5H**	**A**	**1**

Series	**804-300**
Rear Accessory Option	**–** = Accessory Thread and Teeth **B** = Integral Boot Adapter **S** = Integral Banding Platform
Material and Finish[1]	**NF** = Al/Cadmium, Olive Drab **M** = Al/Electroless Nickel **MT** = Al/Nickel PTFE **ZNU** = Al/Black Zinc Nickel
Shell Style[1]	**01** = In Line Receptacle **00** = Jam Nut Receptacle, Front Panel Mount **07** = Jam Nut Receptacle, Rear Panel Mount **16** = Plug
Grounding[4]	**-** = Inline Shielded **G** = Shielded and grounded to shell For improved 360° shielding performance select shell size 16
Shell Size	**15** = Shell Size 15 **16** = Shell Size 16
RJ45 Category	**5H** = Cat 5E For Cat 6A applications consult factory
Aternate Key Positions[1]	**A**, **B**, **C**, **D**, **E**, **F**; Omit for single keyway (non polarized)
RJ45 Orientation	**1**, **2**, **3**, **4**

RJ45 ORIENTATION OPTIONS

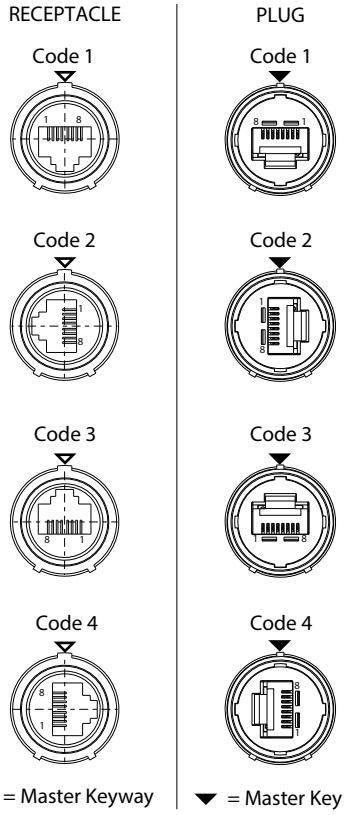

Receptacle Dimensions								
Size Shell	**Mounting Style**	**Ø A**	**B Threads**	**C Threads**	**Ø D**	**ØE**	**ØF**	**K Threads**
15	Front Mount	--	--	.9375-20 UNEF-2A	1.450 (35.31)	.850 (21.59)	1.060 (26.92)	1.125-28 UN-2A
	Rear Mount	1.390 (35.31)	1.0625-20 UN-2A		--			--
16	Front Mount	--	--	1.000-20 UNEF-2A	1.502 (38.15)	.902 (22.91)	1.188 (30.18)	1.1875-28 UN-2A
	Rear Mount	1.425 (36.20)	1.250-28 UN-2A		--			--

SHELL STYLE 01 IN-LINE RECEPTACLE

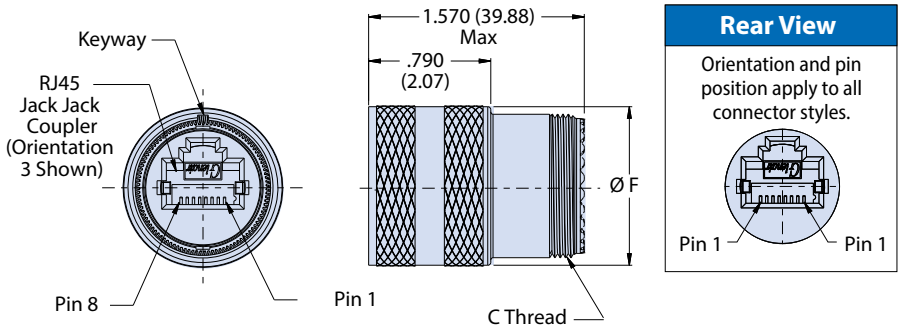

NOTES

1. See Section A for recommended panel cutout dimensions, additional finishes and alternate keyway positions.
2. Meets IP67 sealing requirement in unmated condition
3. Receptacles are JACK-JACK and plugs are PLUG-JACK configurations
4. Size 15 uses only rear shielding sleeve. Size 16 uses front and back shielding sleeves

© 2016 Glenair, Inc • 1211 Air Way, Glendale, CA 91201 • 818-247-6000 • www.glenair.com • U.S. CAGE code 06324 • SuperSeal™ Catalog
Dimensions in Inches (millimeters) are subject to change without notice.

Series 801, 804 and 805 Mighty Mouse

804-300 Push/Pull Coupler with RJ45 Jack-to-Jack (Receptacle) or Plug-to-Jack (Plug)

SHELL STYLE 00 FRONT PANEL MOUNT JAM NUT RECEPTACLE

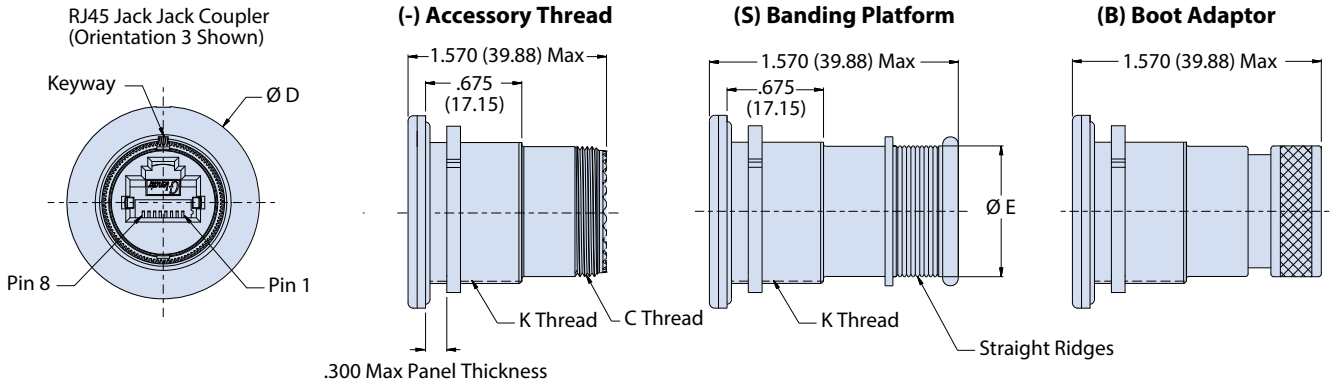

SHELL STYLE 07 REAR PANEL MOUNT JAM NUT RECEPTACLE

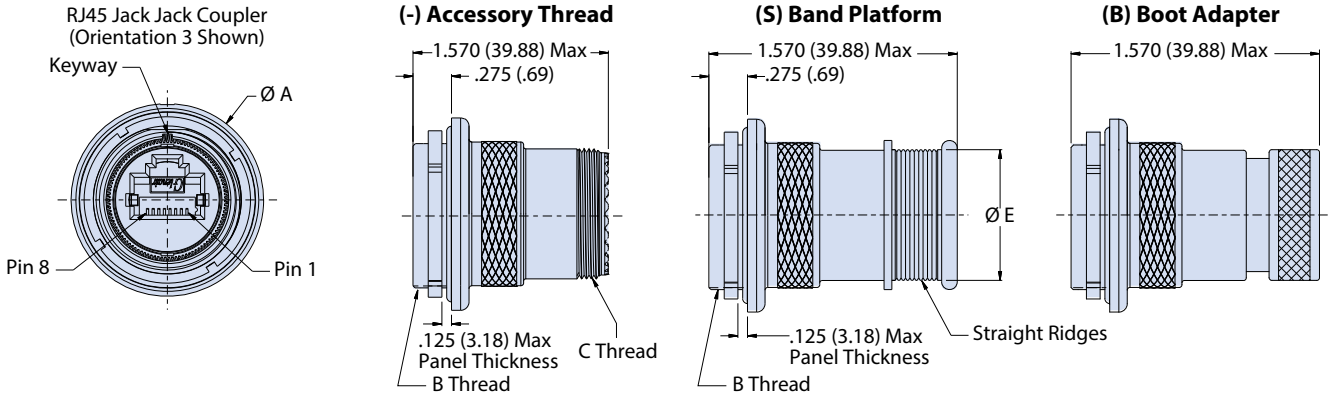

SHELL STYLE 16 PLUG

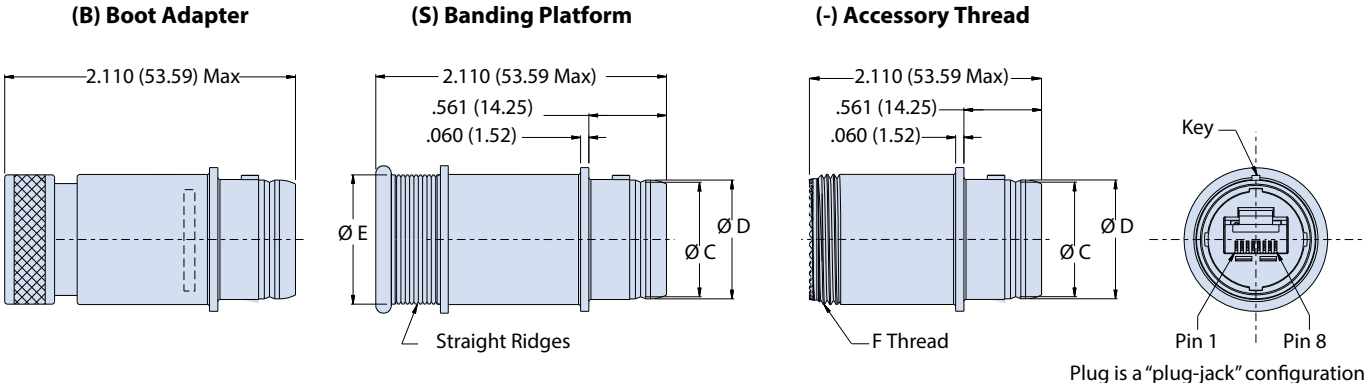

Plug is a "plug-jack" configuration

Plug Dimensions					
Size Shell	Ø A Max	Ø C	Ø D	Ø E	F Thread
15	1.045 (26.54)	.828 (21.03)	.860 (21.84)	.850 (21.59).	.9375-20 UNEF-2A
16	1.095 (27.81)	.878 (21.30)	.910 (23.11)	.902 (22.91)	1.0000-20 UNEF-2A

© 2016 Glenair, Inc • 1211 Air Way, Glendale, CA 91201 • 818-247-6000 • www.glenair.com • U.S. CAGE code 06324 • SuperSeal™ Catalog
Dimensions in Inches (millimeters) are subject to change without notice.

Series 801, 804 and 805 Mighty Mouse

804-301 Push/Pull RJ45 Plug (Plug) or Jack (Receptacle) to Crimp Removable Contacts

How To Order									
Sample Part Number	**804-301**	**-**	**NF**	**07**	**G**	**16**	**5H**	**A**	**1**

Series	**804-301**
Rear Accessory Option	**–** = Accessory Thread and Teeth **B** = Integral Boot Adapter **S** = Integral Banding Platform
Material and Finish[1]	**NF** = Al/Cadmium, Olive Drab **M** = Al/Electroless Nickel **MT** = All/Nickel PTFE **ZNU** = Al/Black Zinc Nickel
Shell Style[1]	**01** = In Line Receptacle **00** = Jam Nut Receptacle, Front Panel Mount **07** = Jam Nut Receptacle, Rear Panel Mount **16** = Plug
Grounding	**-** = Inline Shielded **G** = Shielded and grounded to shell For improved 360° shielding performance select shell size 16
Shell Size	**15** = Shell Size 15 **16** = Shell Size 16
RJ45 Category	**5H** = Cat 5E For Cat 6A applications consult factory
Aternate Key Positions[1]	**A**, **B**, **C**, **D**, **E**, **F**; Omit for single keyway (non polarized)
RJ45 Orientation	**1**, **2**, **3**, **4**

RJ45 ORIENTATION OPTIONS

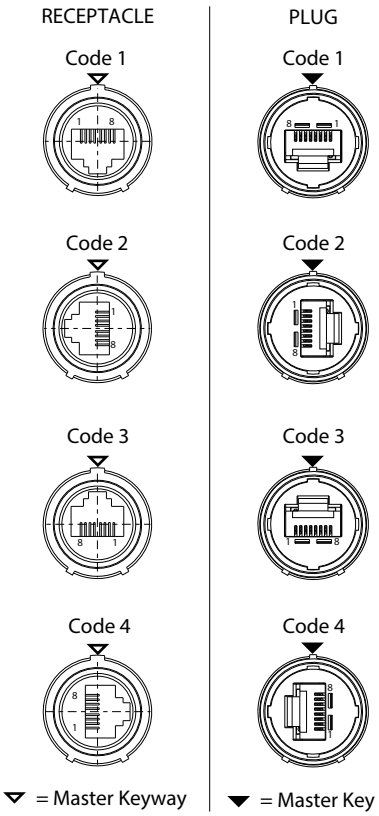

Receptacle Dimensions								
Size Shell	**Mounting Style**	**Ø A**	**B Threads**	**C Threads**	**Ø D**	**ØE**	**ØF**	**K Threads**
15	Front Mount	--	--	.9375-20 UNEF-2A	1.450 (35.31)	.850 (21.59)	1.060 (26.92)	1.125-28 UN-2A
	Rear Mount	1.390 (35.31)	1.0625-20 UN-2A		--			--
16	Front Mount	--	--	1.000-20 UNEF-2A	1.502 (38.15)	.902 (22.91)	1.188 (30.18)	1.1875-28 UN-2A
	Rear Mount	1.425 (36.20)	1.250-28 UN-2A		--			--

SHELL STYLE 01 IN-LINE RECEPTACLE

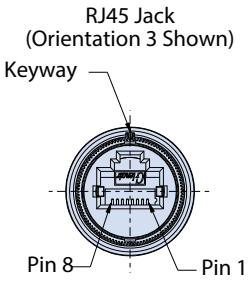

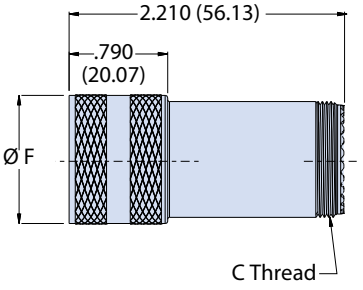

Rear View

Orientation and pin position apply to all connector styles.

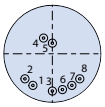

NOTES

1. See Section A for recommended panel cutout dimensions, additional finishes and alternate keyway positions.
2. Meets IP67 sealing requirement in unmated condition
3. Supplied with size 23 crimp socket contacts (809-002 supplied loose)

© 2016 Glenair, Inc • 1211 Air Way, Glendale, CA 91201 • 818-247-6000 • www.glenair.com • U.S. CAGE code 06324 • SuperSeal™ Catalog
Dimensions in Inches (millimeters) are subject to change without notice.

SHELL STYLE 00 FRONT PANEL MOUNT JAM NUT RECEPTACLE

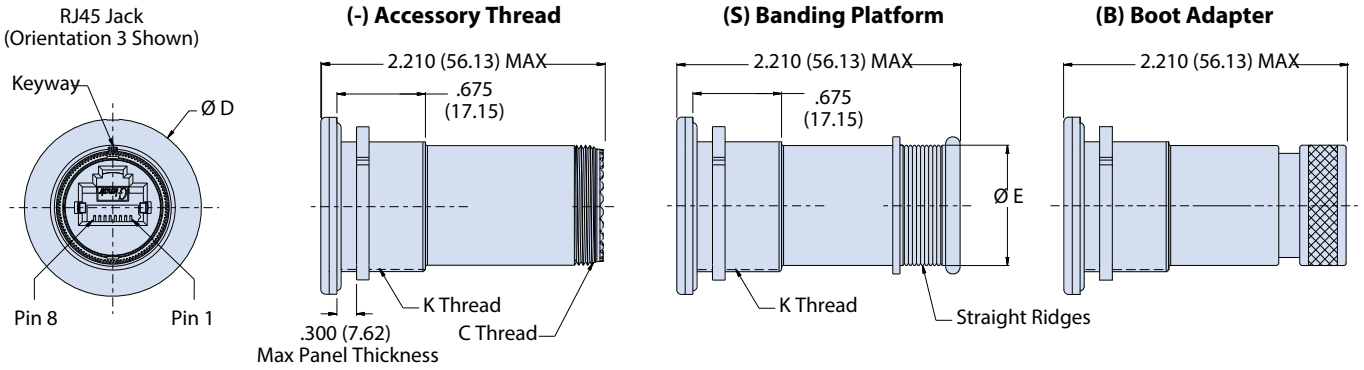

SHELL STYLE 07 REAR PANEL MOUNT JAM NUT RECEPTACLE

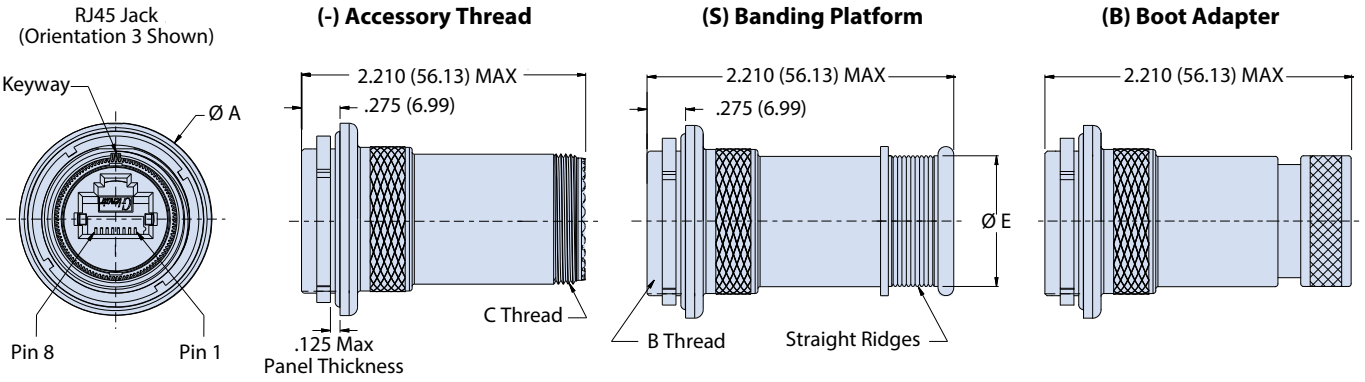

SHELL STYLE 16 PLUG

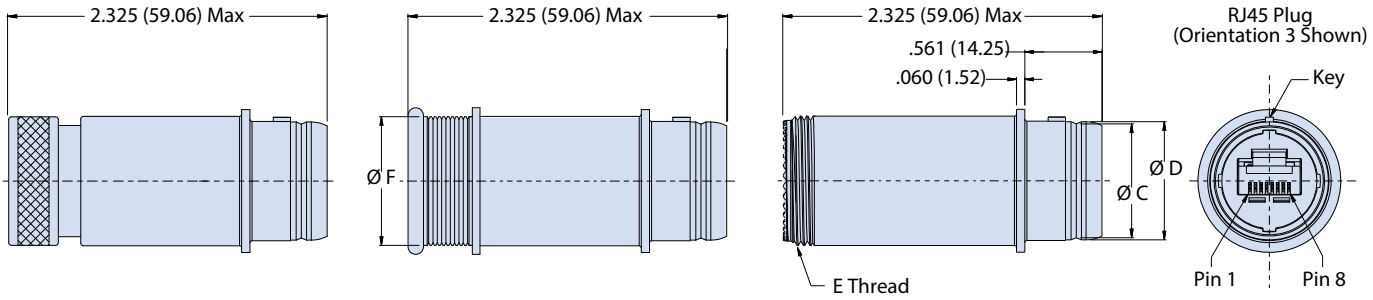

Plug Dimensions					
Shell Size	Ø A	Ø C	Ø D	E Threads	Ø F
15	1.045 (26.54)	.828 (21.03)	.860 (21.84)	.9375-20 UNEF-2A	.850 (26.92)
16	1.095 (27.81)	.878 (22.30)	.910 (23.11)	1.0000-20 UNEF-2A	.902 (22.91)

© 2016 Glenair, Inc • 1211 Air Way, Glendale, CA 91201 • 818-247-6000 • www.glenair.com • U.S. CAGE code 06324 • SuperSeal™ Catalog
Dimensions in Inches (millimeters) are subject to change without notice.

Series 801, 804 and 805 Mighty Mouse

804-302 or 804-303 Push/Pull Receptacle with RJ45 Jack-to-PC Tail or Solder Cup Termination

How To Order								
Sample Part Number	**804-302**	**NF**	**07**	**-**	**15**	**5H**	**A**	**1**

Series	**804-302** = PC Tail **804-303** = Solder Cup
Material and Finish[1]	**NF** = Aluminum/Cadmium, Olive Drab **M** = Aluminum/Electroless Nickel **MT** = Aluminum/Nickel PTFE **ZNU** = Aluminum/Black Zinc Nickel
Shell Style[1]	**07** = Rear Panel Mount Jam Nut Receptacle **00** = Front Panel Mount Jam Nut Receptacle
Shielding	**-** = Inline Shielded **G** = Shielded and grounded to shell For improved 360° shielding performance select shell size 16
Shell Size	**15** = Shell Size 15 **16** = Shell Size 16
RJ45 Category	**5H** = Cat 5E For Cat 6A applications consult factory
Aternate Key Positions[1]	**A**, **B**, **C**, **D**, **E**, **F**; Omit for single keyway (non-polarized)
RJ45 Orientation	**1**, **2**, **3**, **4**

Receptacle Dimensions								
Shell Size	Mounting Style	Ø A		B Threads	Ø D		K Threads	C Threads
		In	mm		In	mm		
15	FRONT MOUNT	-	-	-	1.450	36.83	1.125-28 UN-2A	.9375-20 UNEF-2A
	REAR MOUNT	1.390	35.306	1.0625-20 UN-2A	-	-	-	.9375-20 UNEF-2A
16	FRONT MOUNT	-	-	-	1.502	38.1508	1.1875-28 UN-2A	1.000-20 UNEF-2A
	REAR MOUNT	1.425	36.195	1.250-28 UN-2A	-	-	-	1.000-20 UNEF-2A

RJ45 RECEPTACLE ORIENTATION OPTIONS AND PCB FOOTPRINT

(PARTIAL VIEWS SHOWN)

CODE 1

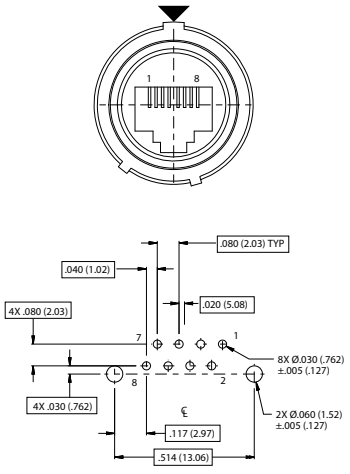

PCB LAYOUT (SOLDER SIDE)

CODE 2

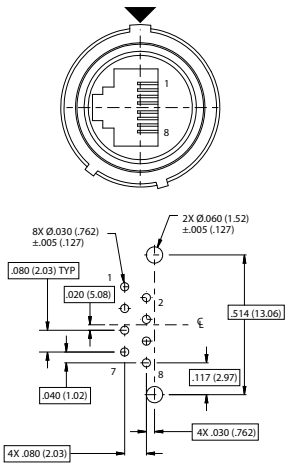

PCB LAYOUT (SOLDER SIDE)

CODE 3

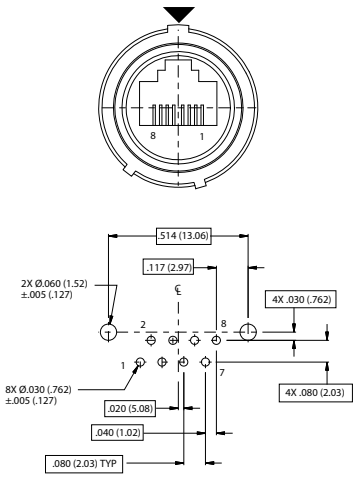

PCB LAYOUT (SOLDER SIDE)

CODE 4

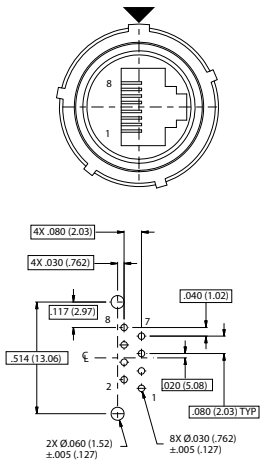

PCB LAYOUT (SOLDER SIDE)

▼ = Master Keyway

PCB layout applies to 804-302 only, orientations codes for 804-302 and 804-303

© 2016 Glenair, Inc • 1211 Air Way, Glendale, CA 91201 • 818-247-6000 • www.glenair.com • U.S. CAGE code 06324 • SuperSeal™ Catalog
Dimensions in Inches (millimeters) are subject to change without notice.

REAR PANEL MOUNT JAM NUT RECEPTACLE, 804-302-07 PC TAIL AND 804-303-07 SOLDER CUP

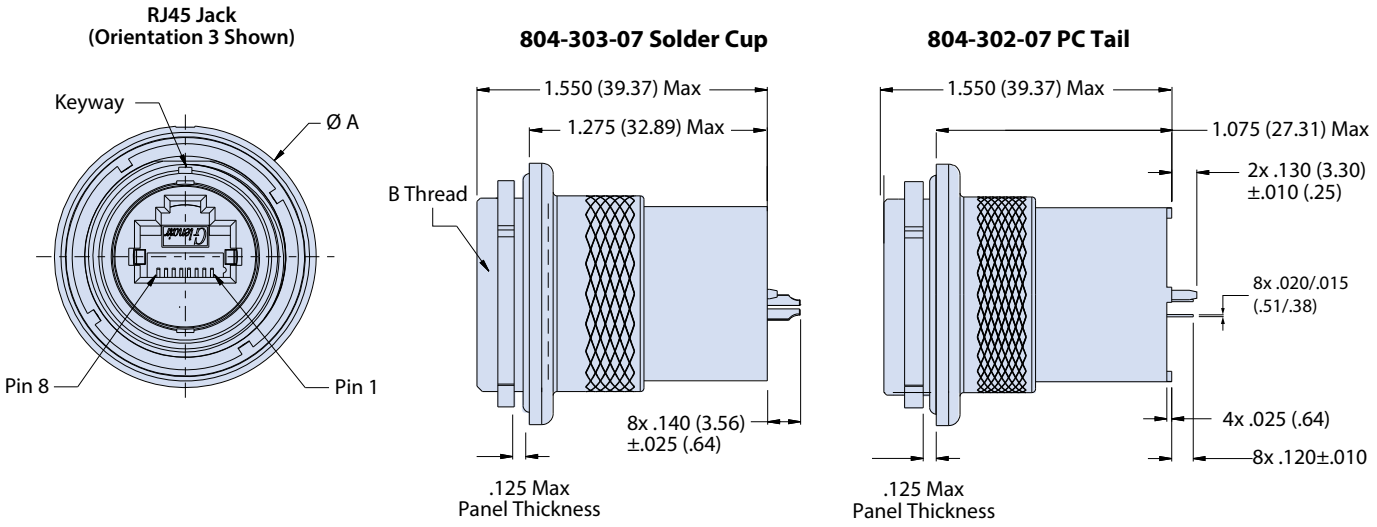

FRONT PANEL MOUNT JAM NUT RECEPTACLE, 804-302-00 PC TAIL AND 804-303-00 SOLDER CUP

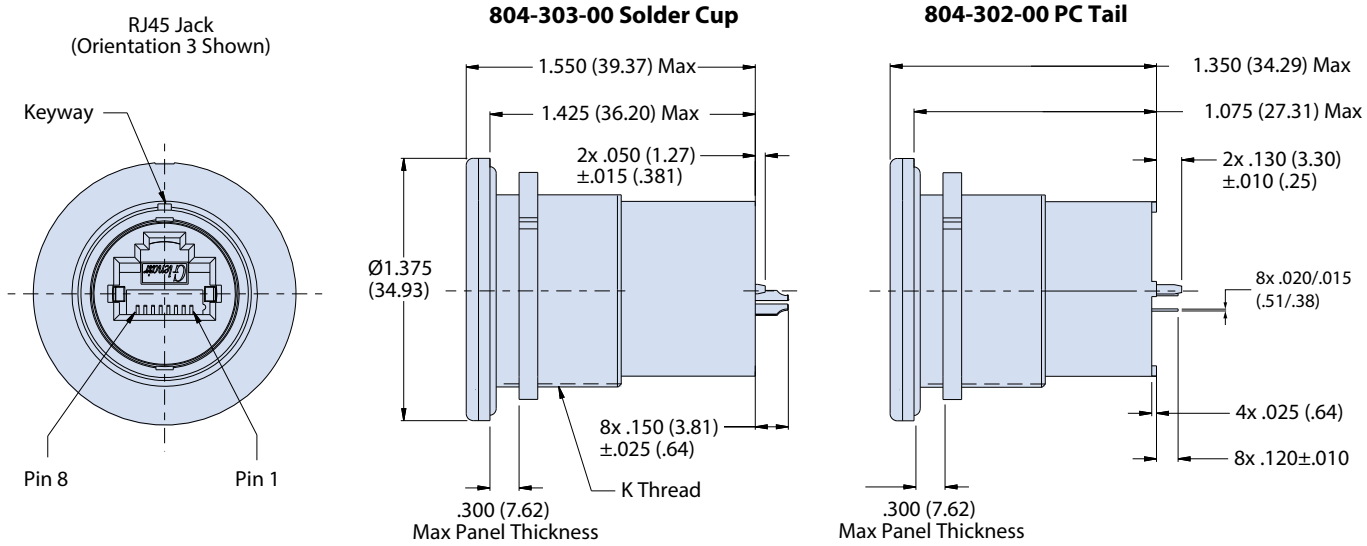

NOTES

1. See Section A for recommended panel cutout dimensions, additional finishes and alternate keyway positions.
2. Meets IP67 sealing requirement in unmated condition
3. Mates with 804-300 series

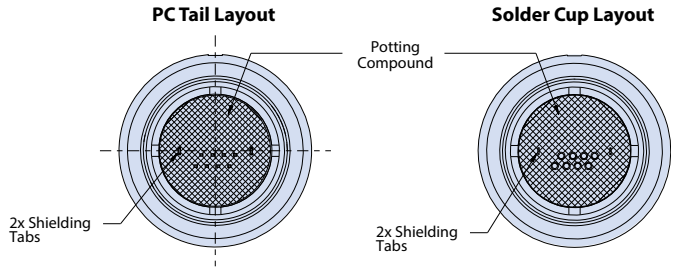

© 2016 Glenair, Inc • 1211 Air Way, Glendale, CA 91201 • 818-247-6000 • www.glenair.com • U.S. CAGE code 06324 • SuperSeal™ Catalog
Dimensions in Inches (millimeters) are subject to change without notice.

RJ45 CAT 5E ETHERNET COMPATIBLE

Series 801, 804 and 805 Mighty Mouse

804-305 Push/Pull Receptacle Adapter with Quadrax Contacts to RJ45 Jack

How To Order									
Sample Part Number	**804-305**	**-**	**NF**	**07**	**G**	**16**	**5H**	**P**	**A**
Series	**804-305**								
Rear Accessory Option	– = Accessory Thread **B** = Boot Adapter **S** = Banding Platform								
Material and Finish[1]	**NF** = Al/Cadmium, Olive Drab **M** = Al/Electroless Nickel **MT** = Al/Nickel PTFE **ZNU** = Al/Black Zinc Nickel								
Shell Style[1]	**01** = In Line Receptacle **00** = Jam Nut Receptacle, FPM **07** = Jam Nut Receptacle, RPM **16** = Plug								
Grounding	- = Inline Shielded **G** = Shielded and grounded to shell For improved 360° shielding performance select shell size 16								
Shell Size	**15** = Shell Size 15 **16** = Shell Size 16								
RJ45 Category	**5H** = Cat 5E For Cat 6A applications consult factory								
Contact Style[3]	**P** = Pin **S** = Socket								
RJ45 Orientation	**A**, **B**, **C**, **D**, **E**, **F**; Omit for single keyway (non polarized)								

WIRING DIAGRAMS

FOR ETHERNET 10base-T & 100 base-TX
(COLOR CODES PER EIA/TIA 568B)

P1 (CONNECTOR INTERFACE)
2 QUADRAX CONTACTS 1, 2, 3 & 4

P2 (RJ45 FEMALE)

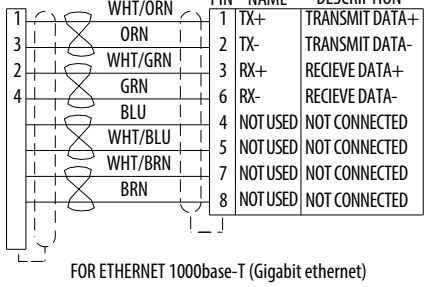

PIN	NAME	DESCRIPTION
1	TX+	TRANSMIT DATA+
2	TX-	TRANSMIT DATA-
3	RX+	RECIEVE DATA+
6	RX-	RECIEVE DATA-
4	NOT USED	NOT CONNECTED
5	NOT USED	NOT CONNECTED
7	NOT USED	NOT CONNECTED
8	NOT USED	NOT CONNECTED

FOR ETHERNET 1000base-T (Gigabit ethernet)
(COLOR CODES PER EIA/TIA 568B)

P1 (CONNECTOR INTERFACE)
2 QUADRAX CONTACTS, A & B

P2 (RJ45 FEMALE)

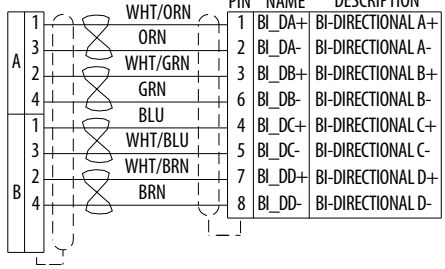

PIN	NAME	DESCRIPTION
1	BI_DA+	BI-DIRECTIONAL A+
2	BI_DA-	BI-DIRECTIONAL A-
3	BI_DB+	BI-DIRECTIONAL B+
6	BI_DB-	BI-DIRECTIONAL B-
4	BI_DC+	BI-DIRECTIONAL C+
5	BI_DC-	BI-DIRECTIONAL C-
7	BI_DD+	BI-DIRECTIONAL D+
8	BI_DD-	BI-DIRECTIONAL D-

PARTIAL VIEW OF CONNECTOR QUADRAX INTERFACE

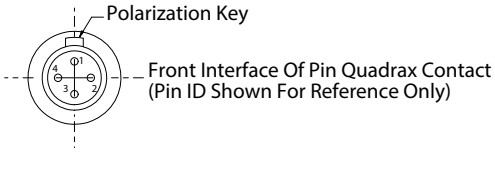

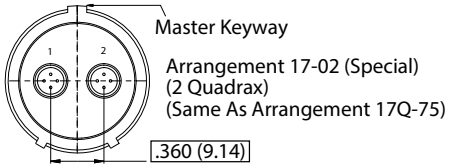

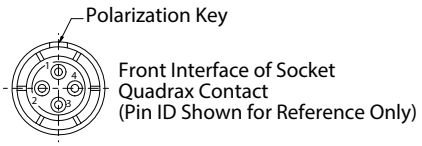

Receptacle Dimensions								
Size Shell	**Mounting Style**	**Ø A**	**B Threads**	**C Threads**	**Ø D**	**ØE**	**ØF**	**K Threads**
15	Front Mount	--	--	.9375-20 UNEF-2A	1.450 (35.31)	.850 (21.59)	1.060 (26.92)	1.125-28 UN-2A
	Rear Mount	1.390 (35.31)	1.0625-20 UN-2A		--			--
16	Front Mount	--	--	1.000-20 UNEF-2A	1.502 (38.15)	.902 (22.91)	1.188 (30.18)	1.1875-28 UN-2A
	Rear Mount	1.425 (36.20)	1.250-28 UN-2A		--			--

SHELL STYLE 01 IN-LINE RECEPTACLE

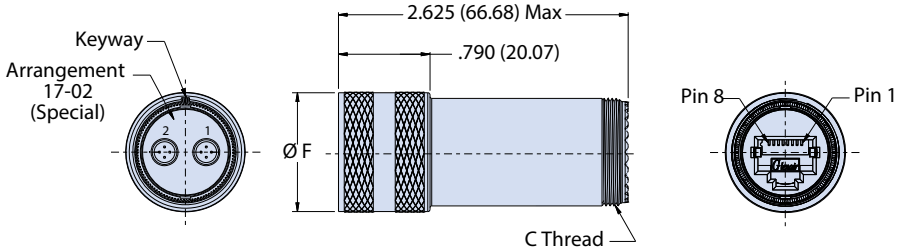

NOTES

1. See Section A for recommended panel cutout dimensions, additional finishes and alternate keyway positions.
2. Meets IP67 sealing requirement in unmated condition
3. Pin contact mates with Glenair socket contact P/N 854-002-XX. Socket contact mates with Glenair pin contact P/N 854-001-XX

© 2016 Glenair, Inc • 1211 Air Way, Glendale, CA 91201 • 818-247-6000 • www.glenair.com • U.S. CAGE code 06324 • SuperSeal™ Catalog
Dimensions in Inches (millimeters) are subject to change without notice.

SHELL STYLE 00 FRONT PANEL MOUNT JAM NUT RECEPTACLE

(-) Accessory Thread

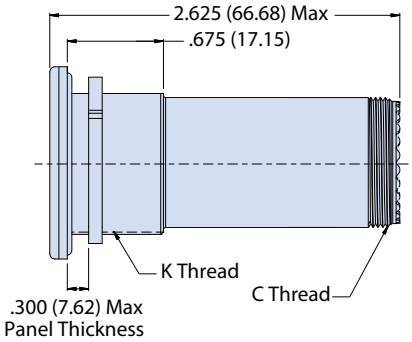

(S) Banding Platform

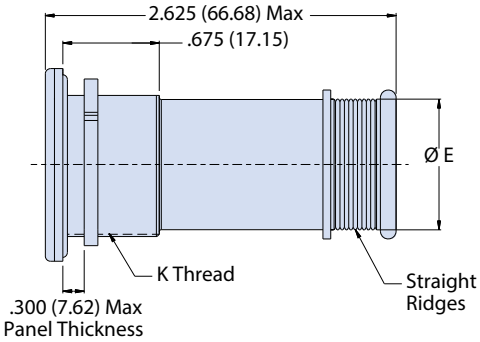

(B) Boot Adapter

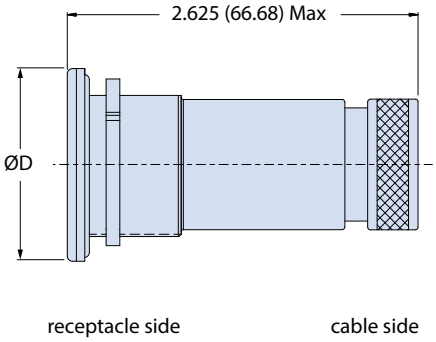

SHELL STYLE 07 REAR PANEL MOUNT JAM NUT RECEPTACLE

(-) Accessory Thread

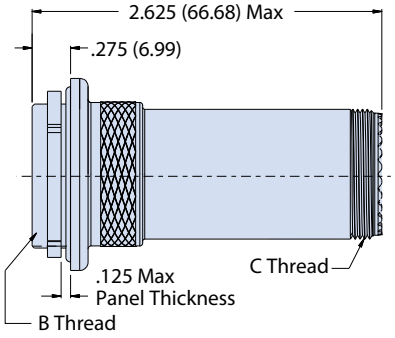

(S) Banding Platform

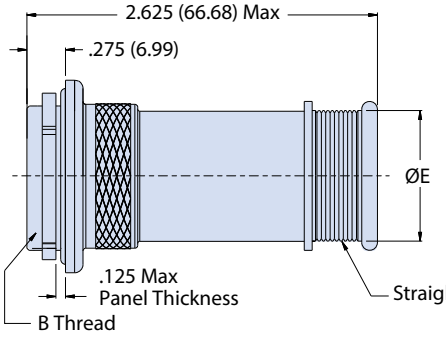

(B) Boot Adapter

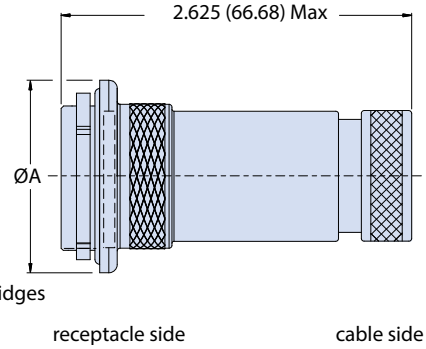

SHELL STYLE 16 PLUG

(B) Boot Adaptor

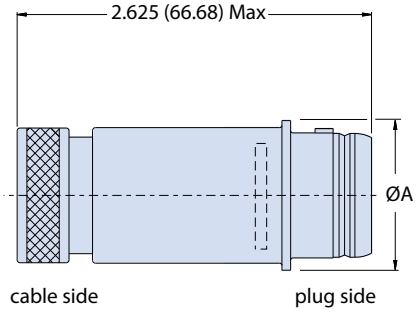

(S) Banding Platform

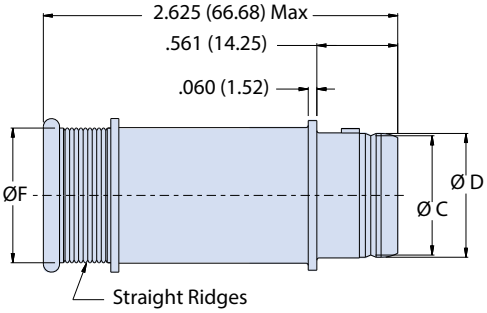

(-) Accessory Thread

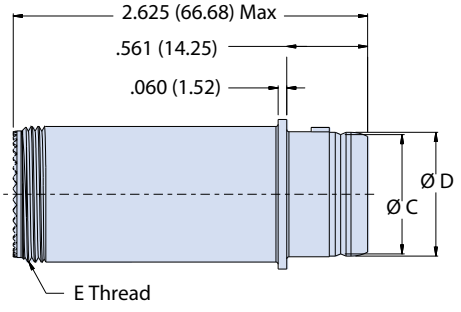

Plug Dimensions					
Shell Size	**Ø A Max**	**Ø C**	**Ø D**	**E Thread**	**Ø F**
15	1.045 (26.54)	.828 (21.03)	.860 (21.84)	.9375-20 UNEF-2A	.850 (21.59)
16	1.095 (27.81)	.878 (22.30)	.910 (23.11)	1.0000-20 UNEF-2A	.902 (22.91)

© 2016 Glenair, Inc • 1211 Air Way, Glendale, CA 91201 • 818-247-6000 • www.glenair.com • U.S. CAGE code 06324 • SuperSeal™ Catalog
Dimensions in Inches (millimeters) are subject to change without notice.

RJ45 CAT 5E ETHERNET COMPATIBLE

Series 801, 804 and 805 Mighty Mouse

805-300 Triple-Start Coupler with RJ45 Jack-to-Jack (Receptacle) or Plug-to-Jack (Plug)

How To Order									
Sample Part Number	**805-300**	**-**	**NF**	**07**	**G**	**21**	**5H**	**A**	**4**
Series	**805-300**								
Rear Accessory Option	**–** = Accessory Thread and Teeth **B** = Integral Boot Adapter **S** = Integral Banding Platform								
Material and Finish[1]	**NF** = Al/Cadmium, Olive Drab **M** = Al/Electroless Nickel **MT** = Al/Nickel PTFE **ZNU** = Al/Black Zinc Nickel								
Shell Style[1]	**01** = In Line Receptacle **02** = Front or Rear Panel Mount Square Flange Receptacle **12** = Rear Panel Mount Square Flange Receptacle with "Non-Locking" Clinch Nuts **22** = Rear Panel Mount Square Flange Receptacle with "Locking" Clinch Nuts **07** = Rear Panel Mount Jam Nut Receptacle **16** = Plug								
Grounding	**G** = Shielded and grounded to shell For improved 360° shielding performance select shell size 21								
Shell Size[3]	**19** = Shell Size 19 **21** = Shell Size 21								
RJ45 Category	**5H** = Cat 5E For Cat 6A applications consult factory,								
Aternate Key Positions[1]	**A**, **B**, **C**, **D**, **E**, **F**; A = Normal								
RJ45 Orientation	**1**, **2**, **3**, **4**								

SHELL STYLE 16 PLUG

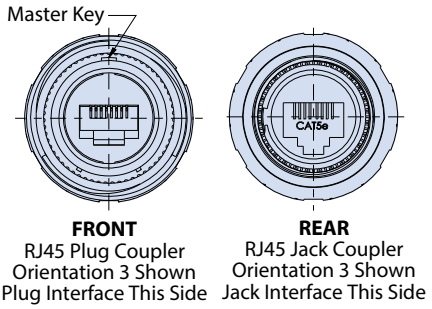

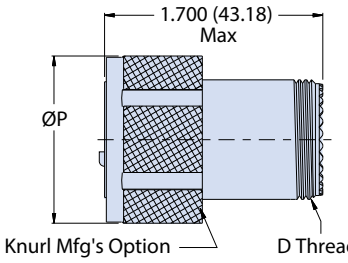

SHELL STYLE 01 IN-LINE RECEPTACLE

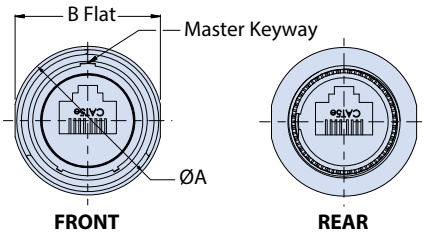

RJ45 Jack-to-Jack receptacle
(Cat5e) Orientation 3 Shown

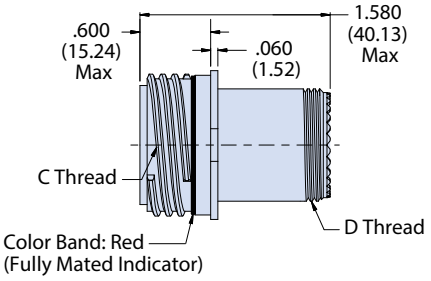

RJ45 JACK ORIENTATION OPTIONS

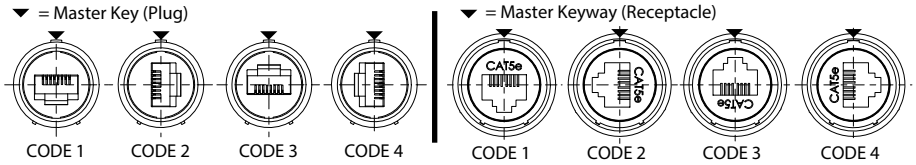

Jam Nut, Plug and Banding Platform Rear Accessory Dimensions						
Size Shell	Ø K	L	M Flat	N Thread	Ø P	Ø R
19	1.450 (36.83)	1.420 (30.07)	1.221 (31.01)	1.2500-28 UN-2A	1.311 (33.30)	.884 (22.45)
21	1.590 (40.38)	1.560 (39.62)	1.350 (34.29)	1.3750-28 UN-2A	1.448 (36.78)	1.003 (25.48)

In-Line, Square Flange and Threaded Rear Accessory Dimensions									
Size Shell	Ø A	B Flat	C Threads	D Thread	Ø E	F SQ	G BSC	Ø H	J SQ
19	1.235 (31.37)	1.205 (30.61)	1.1875-.1P-.3L-TS-2A	.9375-20 UNEF-2A	2.094 (53.19)	1.537 (39.04)	1.327 (39.04)	2.197 (55.80)	1.647 (41.83)
21	1.360 (34.54)	1.330 (33.78)	1.3125-.1P-.3L-TS-2A	1.0625-18 UNEF-2A	2.270 (57.66)	1.663 (42.24)	1.452 (36.88)	2.380 (60.45)	1.772 (45.01)

© 2016 Glenair, Inc • 1211 Air Way, Glendale, CA 91201 • 818-247-6000 • www.glenair.com • U.S. CAGE code 06324 • SuperSeal™ Catalog
Dimensions in Inches (millimeters) are subject to change without notice.

Series 801, 804 and 805 Mighty Mouse

805-300 Triple-Start Coupler with RJ45 Jack-to-Jack (Receptacle) or Plug-to-Jack (Plug)

SHELL STYLE 02 FRONT OR REAR PANEL MOUNT SQUARE FLANGE RECEPTACLE

RJ45 Jack-to-Jack Connector (Cat 5e) Orientation 3 Shown

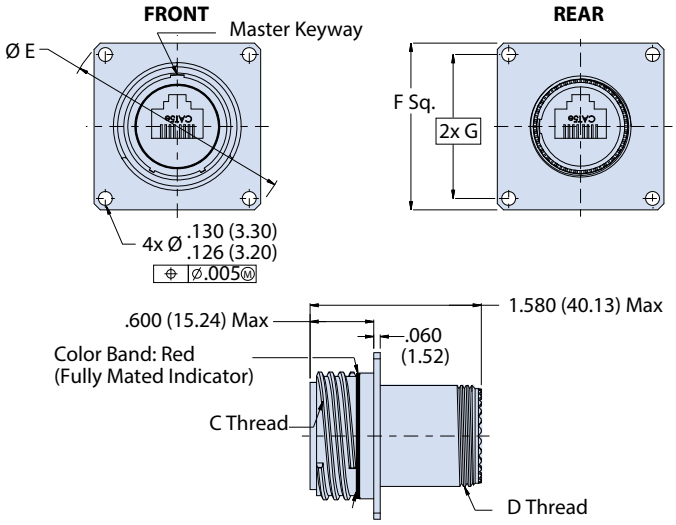

SHELL STYLE 12 & 22 FRONT OR REAR PANEL MOUNT RECEPTACLE WITH CLINCH NUTS

RJ45 Jack-to-Jack Category (Cat 5e) Orientation 3 Shown

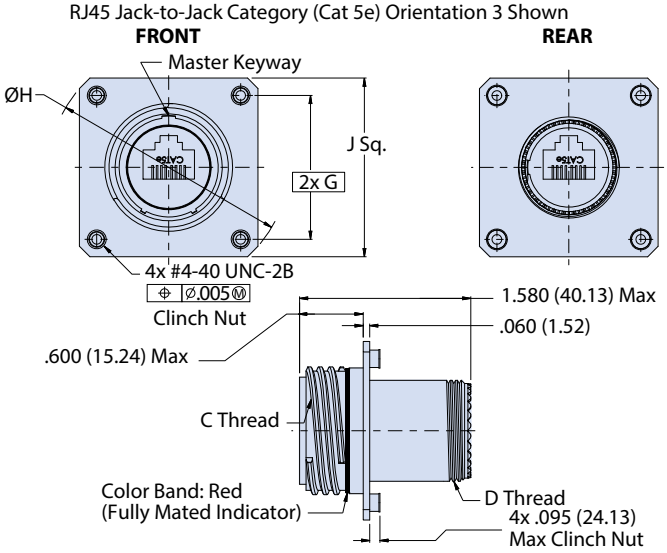

SHELL STYLE 07 REAR PANEL MOUNT JAM NUT RECEPTACLE

RJ45 Jack Category (Cat 5e) Orientation 3 Shown

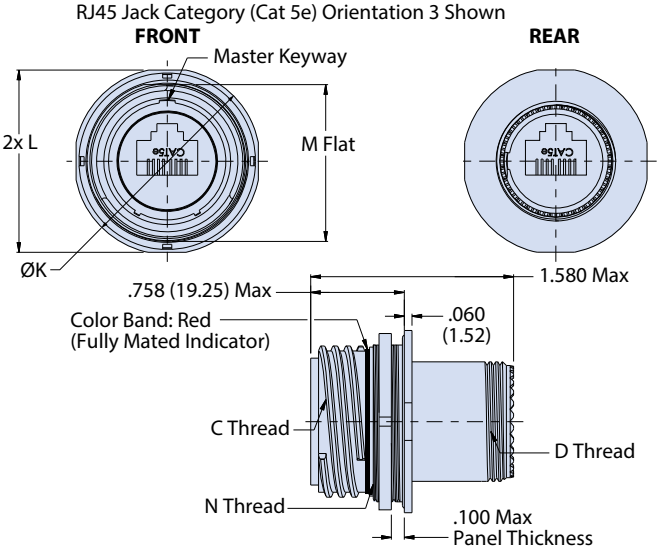

ADDITIONAL REAR ACCESSORY OPTIONS

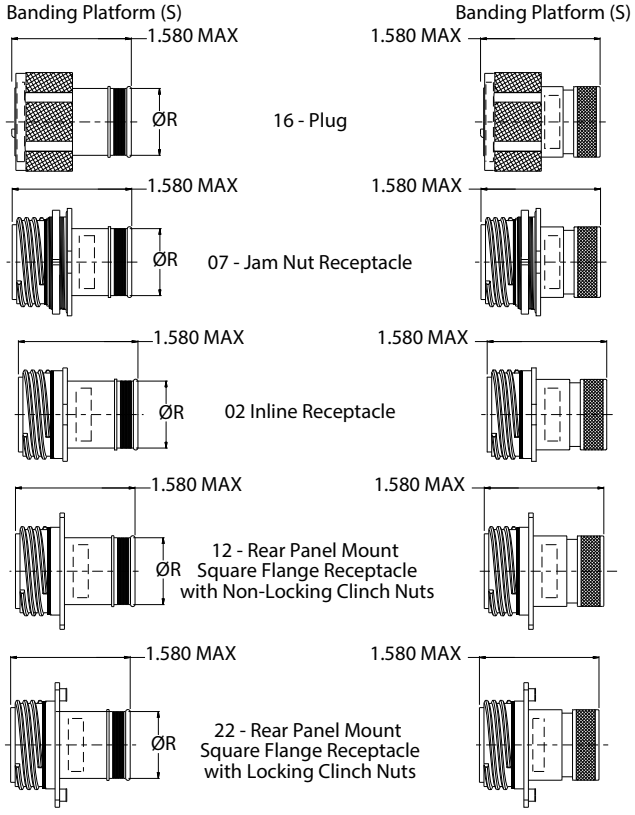

NOTES

1. See Section A for recommended panel cutout dimensions, additional finishes and alternate keyway positions.
2. IP67 sealing in unmated condition
3. Size 19 uses only rear shield sleeve
   Size 21 uses front and rear shield sleeves

© 2016 Glenair, Inc • 1211 Air Way, Glendale, CA 91201 • 818-247-6000 • www.glenair.com • U.S. CAGE code 06324 • SuperSeal™ Catalog
Dimensions in Inches (millimeters) are subject to change without notice.

Series 801, 804 and 805 Mighty Mouse

805-301 Triple-Start Connector with RJ45 Plug (Plug) or Jack (Receptacle) to Crimp Removable Contacts

How To Order

Sample Part Number	805-301	-	NF	01	G	21	5H	A	1

Series	**805-301** = Crimp Contacts
Rear Accessory Option	**–** = Accessory Thread and Teeth **B** = Integral Boot Adapter **S** = Integral Banding Platform
Material and Finish[1]	**NF** = Aluminum/Cadmium, Olive Drab **M** = Aluminum/Electroless Nickel **MT** = Aluminum/Nickel PTFE **ZNU** = Aluminum/Black Zinc Nickel
Shell Style[1]	**01** = In Line Receptacle **02** = Front or Rear Panel Mount Square Flange Receptacle **12** = Rear Panel Mount Square Flange Receptacle with "Non-Locking" Clinch Nuts **22** = Rear Panel Mount Square Flange Receptacle with "Locking" Clinch Nuts **07** = Rear Panel Mount Jam Nut Receptacle **16** = Plug
Shielding/Grounding[2]	**-** = Inline Shielded **G** = Inline Shielded and Grounded to Shell
Shell Size	**21** = Shell Size 21
RJ45 Category	**5H** = Cat 5E For Cat 6A applications consult factory
Aternate Key Positions[1]	**A**, **B**, **C**, **D**, **E**, **F**; A = Normal
RJ45 Orientation Option	**1**, **2**, **3**, **4**

RJ45 JACK ORIENTATION OPTIONS

▼ = Master Key (Plug)

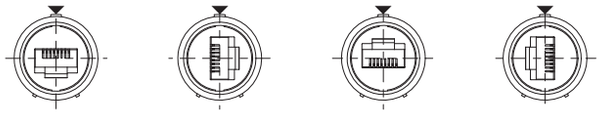

▼ = Master Keyway (Receptacle)



SHELL STYLE 16 PLUG

RJ45 Plug Category (CAT 5e) Orientation 3 Shown

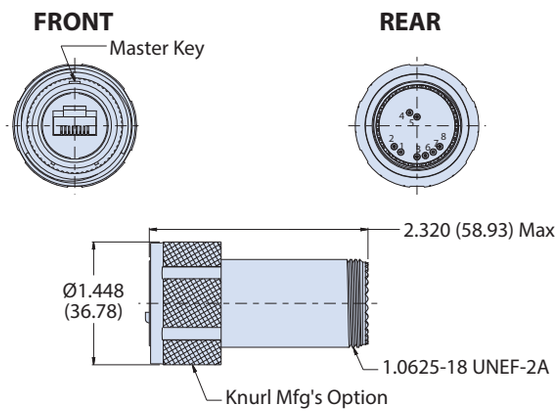

SHELL STYLE 01 IN-LINE RECEPTACLE

RJ45 Jack Category (CAT 5e) Orientation 3 Shown

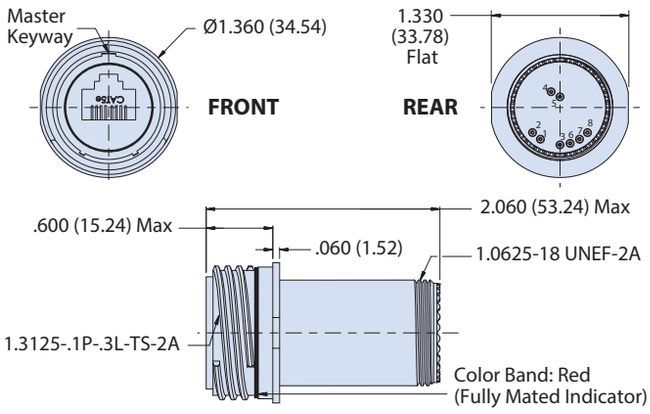

© 2016 Glenair, Inc • 1211 Air Way, Glendale, CA 91201 • 818-247-6000 • www.glenair.com • U.S. CAGE code 06324 • SuperSeal™ Catalog
Dimensions in Inches (millimeters) are subject to change without notice.

Series 801, 804 and 805 Mighty Mouse

805-301 Triple-Start Connector with RJ45 Plug (Plug) or Jack (Receptacle) to Crimp Removable Contacts

SHELL STYLE 02 FRONT OR REAR PANEL MOUNT RECEPTACLE

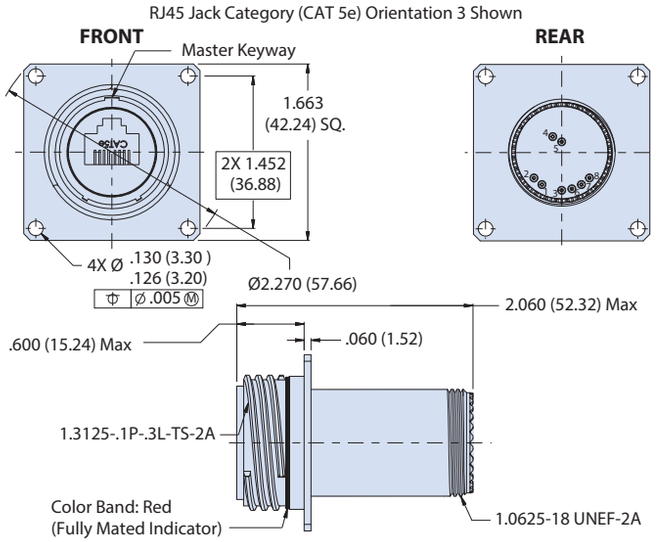

SHELL STYLE 12 & 22 REAR PANEL MOUNT RECEPTACLE WITH CLINCH NUTS

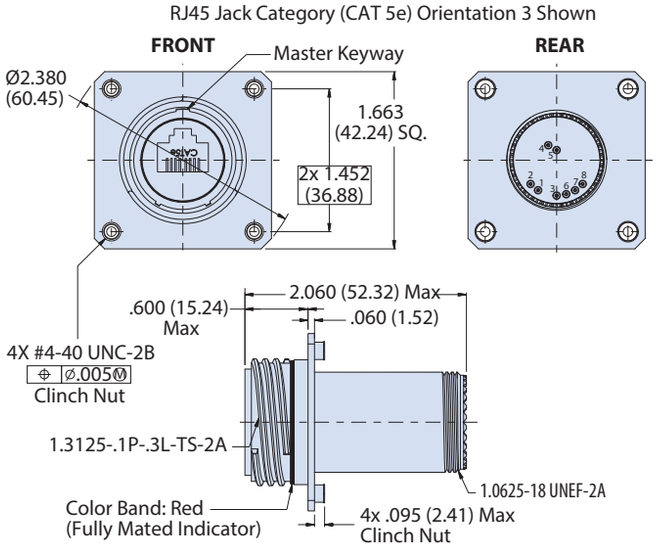

SHELL STYLE 07 REAR PANEL MOUNT JAM NUT RECEPTACLE

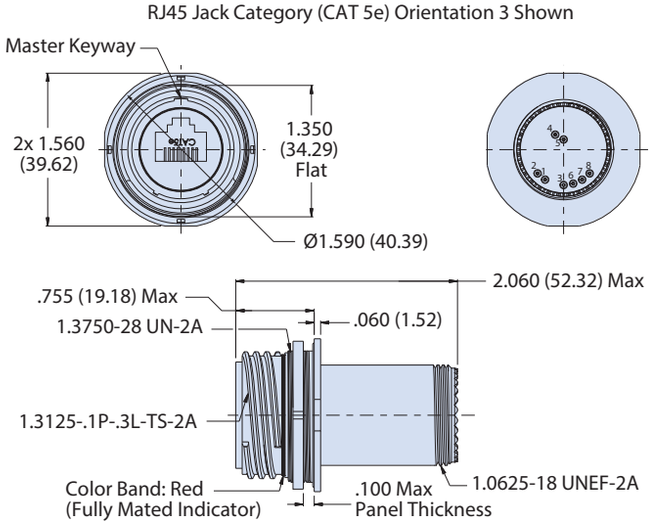

REAR ACCESSORY OPTIONS

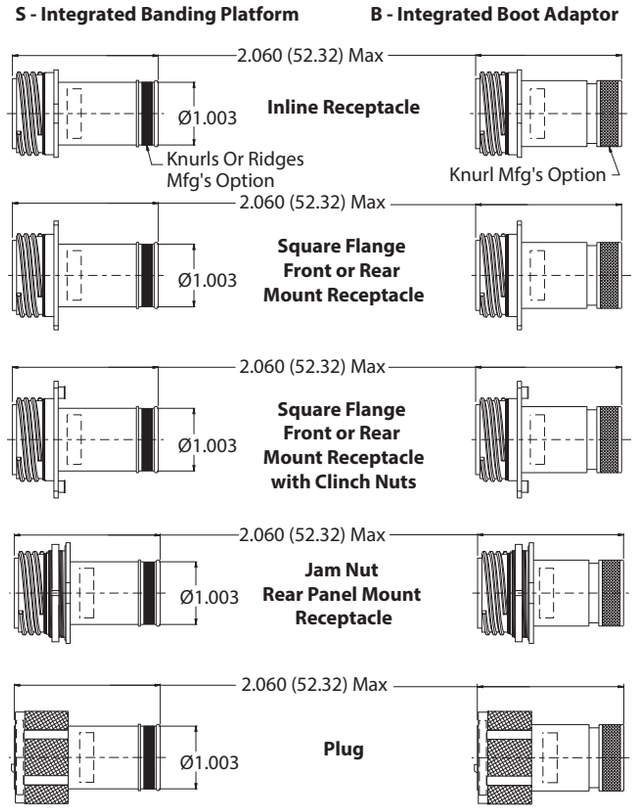

NOTES

1. See Section A for recommended panel cutout dimensions, additional finishes and alternate keyway positions.
2. G option is inline shielded and grounded to shell, receptacle only
3. Meets IP67 sealing requirement in unmated condition
4. Supplied with size 23 crimp pin contacts (809-001 supplied loose)

© 2016 Glenair, Inc • 1211 Air Way, Glendale, CA 91201 • 818-247-6000 • www.glenair.com • U.S. CAGE code 06324 • SuperSeal™ Catalog
Dimensions in Inches (millimeters) are subject to change without notice.

RJ45/USB SUPER SEAL™

RJ45 CAT 5E ETHERNET COMPATIBLE

Series 801, 804 and 805 Mighty Mouse

805-302 Triple-Start Receptacle with RJ45 Jack to PC Tail Termination

Glenair®

How To Order								
Sample Part Number	**805-302**	**NF**	**07**	**G**	**19**	**5H**	**A**	**1**

Series	**805-302** = PC Tail
Material and Finish[1]	**NF** = Aluminum/Cadmium, Olive Drab **M** = Aluminum/Electroless Nickel **MT** = Aluminum/Nickel PTFE **ZNU** = Aluminum/Black Zinc Nickel
Shell Style[1]	**02** = Front or Rear Panel Mount Square Flange Receptacle **12** = Rear Panel Mount Square Flange Receptacle with "Non-Locking" Clinch Nuts **22** = Rear Panel Mount Square Flange Receptacle with "Locking" Clinch Nuts **07** = Rear Panel Mount Jam Nut Receptacle
Grounding	**G** = Shielded and grounded to shell For improved 360° shielding performance select shell size 21
Shell Size	**19** = Shell Size 19 **21** = Shell Size 21
RJ45 Category	**5H** = Cat 5E For Cat 6A applications consult factory
Aternate Key Positions[1]	**A**, **B**, **C**, **D**, **E**, **F**; A = Normal
RJ45 Orintation Option	**1**, **2**, **3**, **4**

RJ45 RECEPTACLE ORIENTATION OPTIONS AND PCB FOOTPRINT (PARTIAL VIEWS SHOWN)

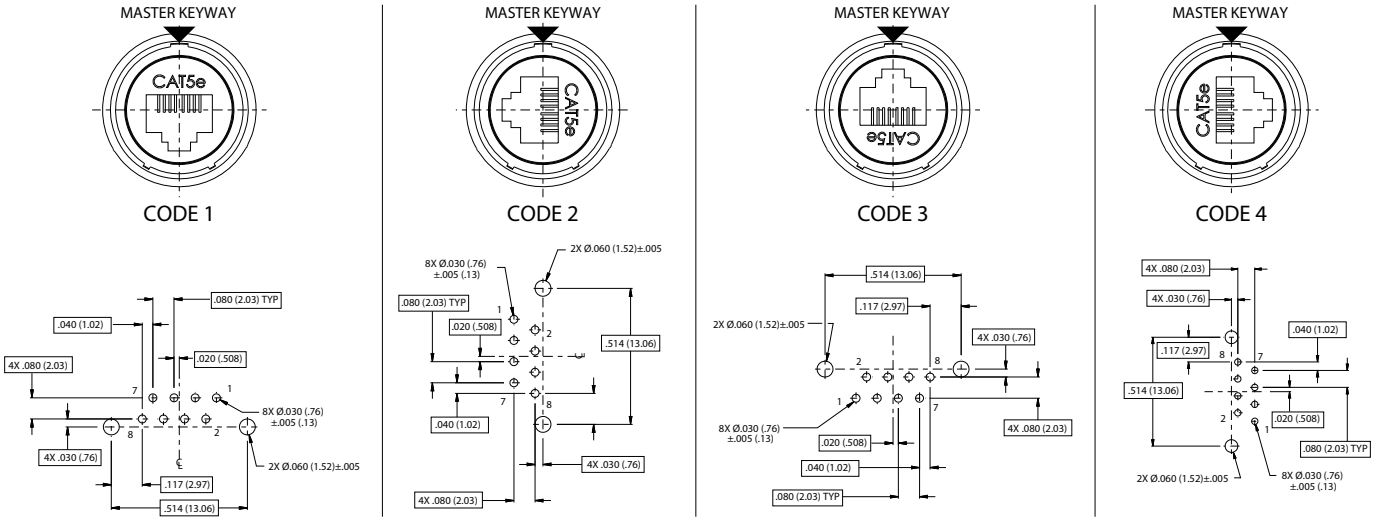

PCB Layout (Solder Side Shown)

Square Flange Mount Dimensions									
Shell Size	**Ø A**	**B Flat**	**C Thread**	**Ø D**	**Ø E**	**F SQ**	**G BSC**	**Ø H**	**J SQ**
19	1.235 (31.69)	1.205 (30.61)	1.1875-.1P-.3L-TS-2A	0.912 (23.16)	2.094 (53.19)	1.537 (39.04)	1.327 (33.71)	2.197 (55.80)	1.647 (41.83)
21	1.360 (34.54)	1.330 (33.78)	1.3125-.1P-.3L-TS-2A	1.017 (25.83)	2.270 (57.66)	1.663 (42.24)	1.452 (36.88)	2.380 (60.45)	1.772 (45.01)

Jam Nut and Plug Dimensions				
Shell Size	**Ø K**	**L**	**M Flat**	**N Thread**
19	1.450 (36.83)	1.420 (36.07)	1.221 (31.01)	1.2500-28 UN-2A
21	1.590 (40.39)	1.560 (39.62)	1.350 (34.29)	1.3750-28 UN-2A

NOTES

1. See Section A for recommended panel cutout dimensions, additional finishes and alternate keyway positions
2. Meets IP67 sealing requirement in unmated condition

© 2016 Glenair, Inc • 1211 Air Way, Glendale, CA 91201 • 818-247-6000 • www.glenair.com • U.S. CAGE code 06324 • SuperSeal™ Catalog
Dimensions in Inches (millimeters) are subject to change without notice.

Series 801, 804 and 805 Mighty Mouse

805-302 Triple-Start Receptacle with RJ45 Jack to PC Tail Termination

SHELL STYEL 01 INLINE

RJ45 Jack Category (Cat 5e) Orientation 3 Shown

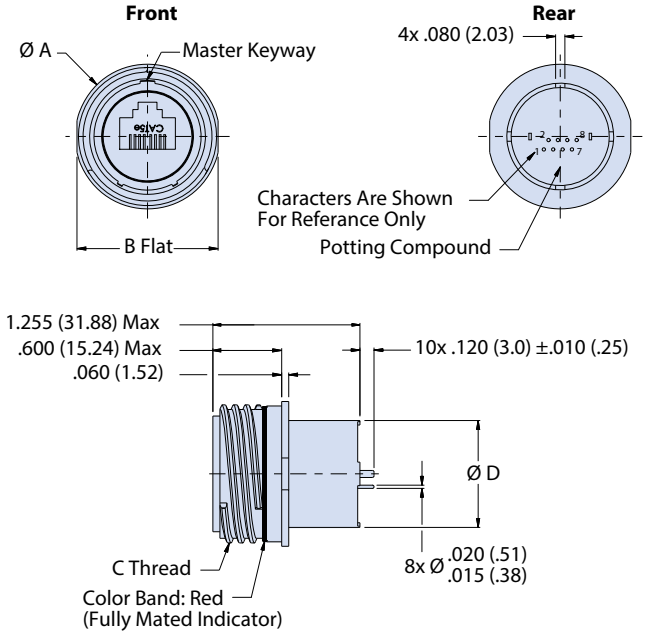

SHELL STYLE 07 JAM NUT

RJ45 Jack Category (Cat 5e) Orientation 3 Shown

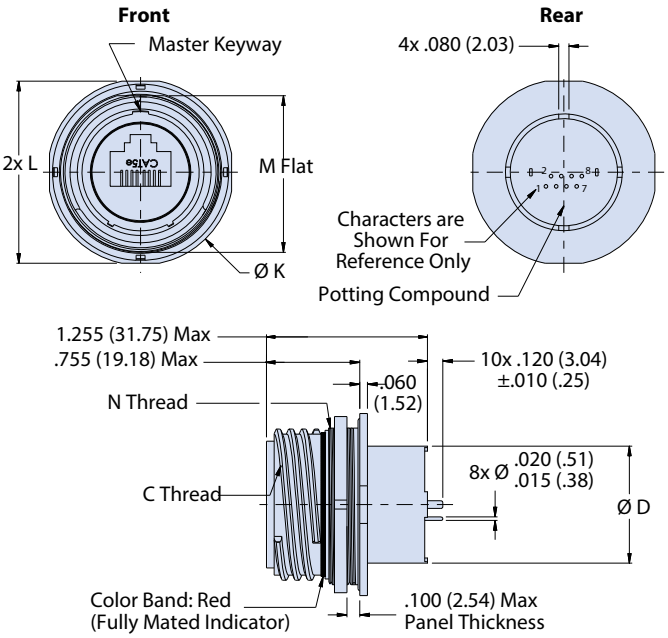

SHELL STYLE 02 FRONT OR REAR PANEL MOUNT SQUARE FLANGE RECEPTACLE

RJ45 Jack Category (Cat 5e) Orientation 3 Shown

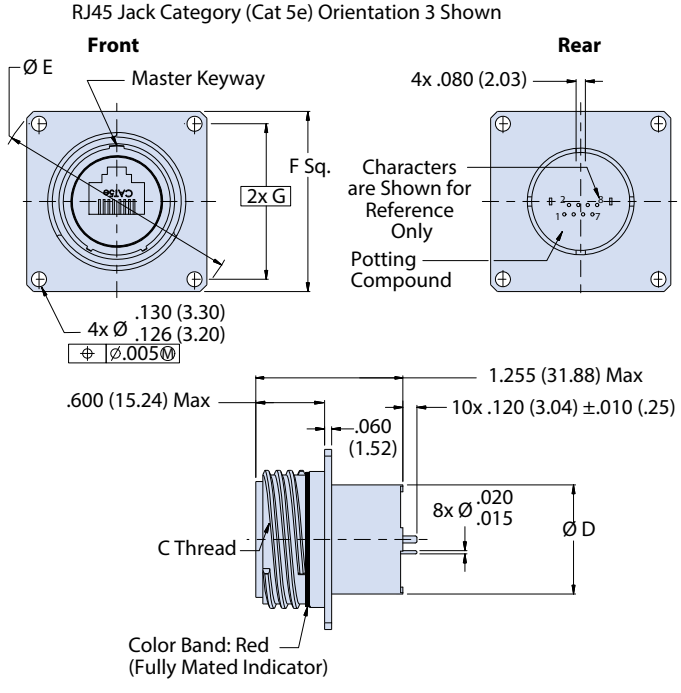

SHELL STYLE 12 AND 22 REAR PANEL MOUNT SQ FLANGE RECEPTACLE WITH CLINCH NUTS

RJ45 Jack Category (CAT 5e) Orientation 3 Shown

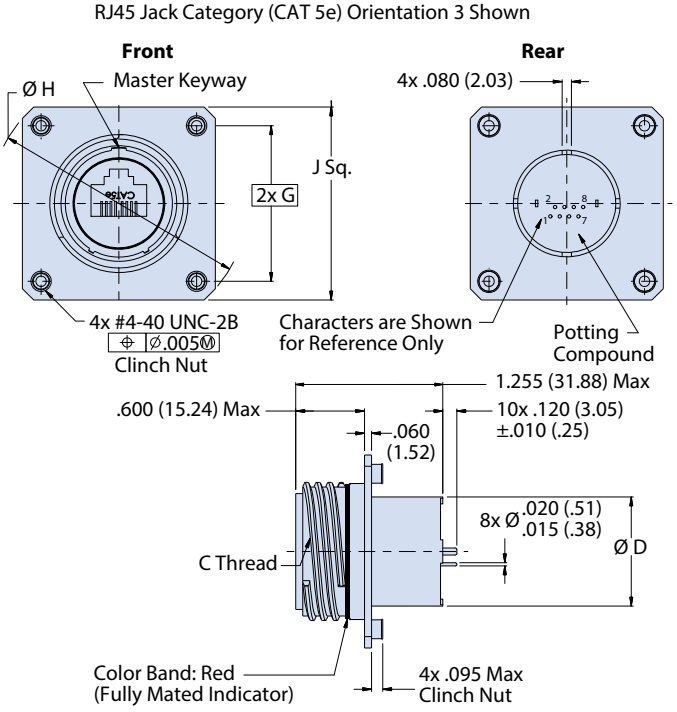

© 2016 Glenair, Inc • 1211 Air Way, Glendale, CA 91201 • 818-247-6000 • www.glenair.com • U.S. CAGE code 06324 • SuperSeal™ Catalog

Dimensions in Inches (millimeters) are subject to change without notice.

Series 801, 804 and 805 Mighty Mouse

805-303 Triple-Start Receptacle with RJ45 Jack to Solder Cup Termination

How To Order								
Sample Part Number	**805-303**	**NF**	**07**	**G**	**19**	**5H**	**A**	**1**

Series	**805-303** = Solder Cup
Material and Finish[1]	**NF** = Aluminum/Cadmium, Olive Drab **M** = Aluminum/Electroless Nickel **MT** = Aluminum/Nickel PTFE **ZNU** = Aluminum/Black Zinc Nickel
Shell Style[1]	**02** = Front or Rear Panel Mount Square Flange Receptacle **12** = Rear Panel Mount Square Flange Receptacle with "Non-Locking" Clinch Nuts **22** = Rear Panel Mount Square Flange Receptacle with "Locking" Clinch Nuts **07** = Rear Panel Mount Jam Nut Receptacle
Grounding	**G** = Shielded and grounded to shell For improved 360° shielding performance select shell size 21
Shell Size	**19** = Shell Size 19 **21** = Shell Size 21
RJ45 Category	**5H** = Cat 5E For Cat 6A applications consult factory
Aternate Key Positions[1]	**A**, **B**, **C**, **D**, **E**, **F**; A = Normal
RJ45 Orintation Option	**1**, **2**, **3**, **4**

RJ45 RECEPTACLE ORIENTATION OPTIONS (PARTIAL VIEWS SHOWN)

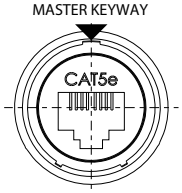

CODE 1

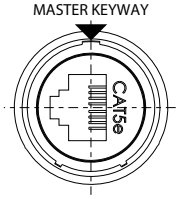

CODE 2

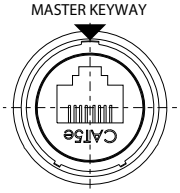

CODE 3

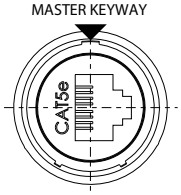

CODE 4

Square Flange Mount Dimensions									
Shell Size	**Ø A**	**B Flat**	**C Thread**	**Ø D**	**Ø E**	**F SQ**	**G BSC**	**Ø H**	**J SQ**
19	1.235 (31.69)	1.205 (30.61)	1.1875-.1P-.3L-TS-2A	.912 (23.16)	2.094 (53.19)	1.537 (39.04)	1.327 (33.71)	2.197 (55.80)	1.647 (41.83)
21	1.360 (34.54)	1.330 (33.78)	1.3125-.1P-.3L-TS-2A	1.017 (25.83)	2.270 (57.66)	1.663 (42.24)	1.452 (36.88)	2.380 (60.45)	1.772 (45.01)

Jam Nut and Plug Dimensions				
Shell Size	**Ø K**	**L**	**M Flat**	**N Thread**
19	1.450 (36.83)	1.420 (36.07)	1.221 (31.01)	1.2500-28 UN-2A
21	1.590 (40.39)	1.560 (39.62)	1.350 (34.29)	1.3750-28 UN-2A

NOTES

1. See Section A for recommended panel cutout dimensions, additional finishes and alternate keyway positions
2. Meets IP67 sealing requirement in unmated condition
3. Materials/Finishes:
   - Insulators: high grade rigid dielectric/n.a.
   - contacts: copper alloy, gold plated
   - seals: silicone based eleastomer
   - RJ45 coupler housing: UL94V-0 compliant ABS or PPS
   - hardware: stainless steel/passivated

© 2016 Glenair, Inc • 1211 Air Way, Glendale, CA 91201 • 818-247-6000 • www.glenair.com • U.S. CAGE code 06324 • SuperSeal™ Catalog
Dimensions in Inches (millimeters) are subject to change without notice.

Series 801, 804 and 805 Mighty Mouse

805-303 Triple-Start Receptacle with RJ45 Jack to Solder Cup Termination

SHELL STYEL 01 INLINE

RJ45 Jack Category (Cat 5e) orientation 3 Shown

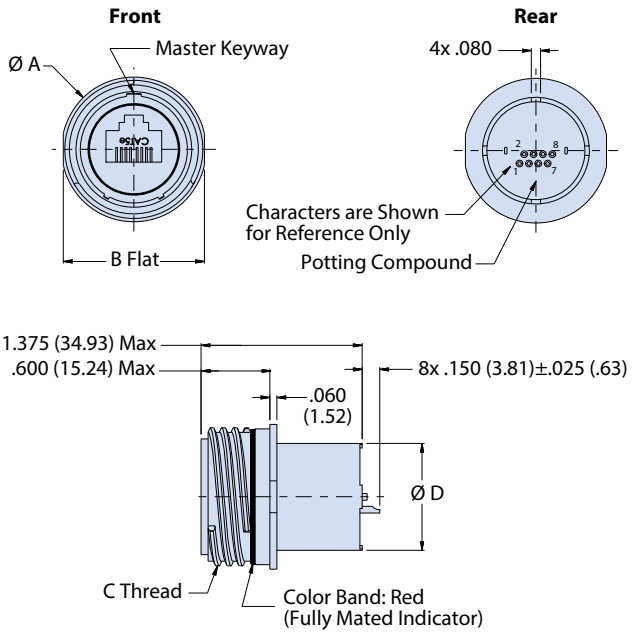

SHELL STYLE 07 JAM NUT

RJ45 Jack Category (Cat 5e) Orientation 3 Shown

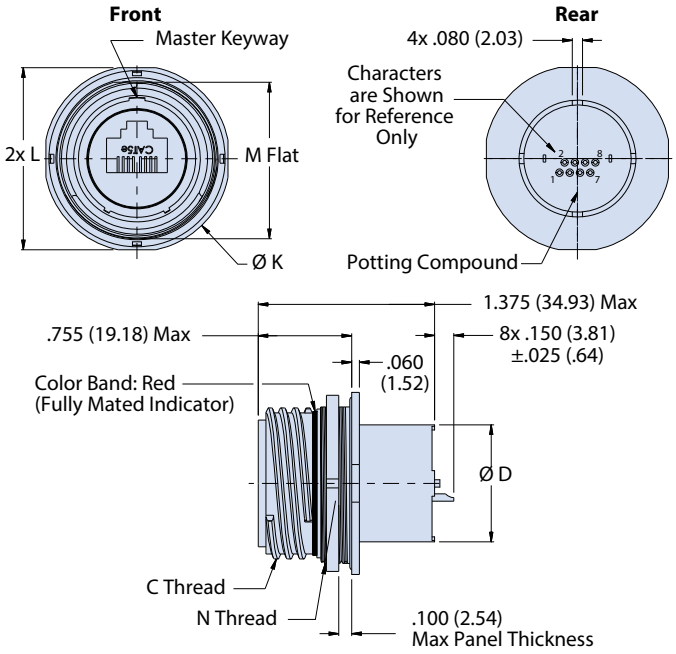

SHELL STYLE 02 FRONT OR REAR PANEL MOUNT SQUARE FLANGE RECEPTACLE

RJ45 (CAT 5e) Orientation 3 Shown

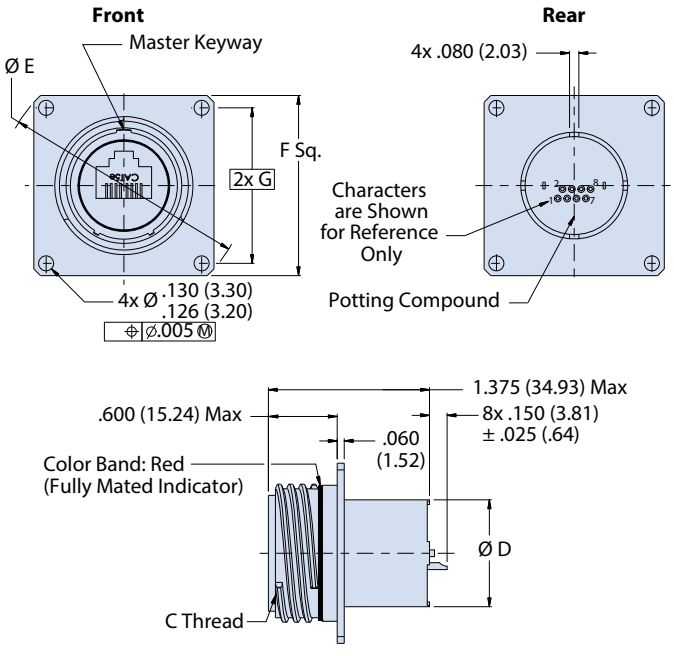

SHELL STYLE 12 AND 22 REAR PANEL MOUNT SQ FLANGE RECEPTACLE WITH CLINCH NUTS

RJ45 (CAT 5e) Orientation 3 Shown

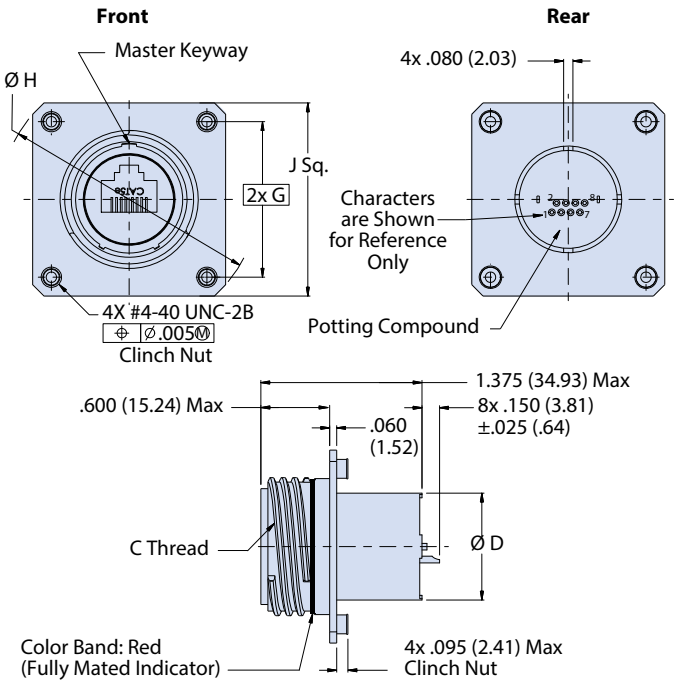

© 2016 Glenair, Inc • 1211 Air Way, Glendale, CA 91201 • 818-247-6000 • www.glenair.com • U.S. CAGE code 06324 • SuperSeal™ Catalog

Dimensions in Inches (millimeters) are subject to change without notice.

SERIES 80 MIGHTY MOUSE FIELD-READY STANDARD USB

SUPERSEAL™



Series 801, 804 and 805 Mighty Mouse connectors with superior sealing, shielding and a variety of termination options.



Features

- **Superior sealing— IP67 unmated and IP68 when mated—for complete system protection against water, sand and dust**
- **Couple, Crimp contact, PC tail and solder cup termination options available**
- **Integral banding porch or connector accessory interface**
- **Standard USB 2.0 plugs and receptacles**
- **Series 804 push/pull, Series 801 double-start or Series 805 triple-start, stub ACME threaded coupling.**
- **Less than half the size and weight compared to MIL-DTL-38999 type solutions**

Glenair®

Glenair, Inc.
1211 Air Way
Glendale, CA 91201-2497
818-247-6000
sales@glenair.com
www.glenair.com

Series 801
Double-Start

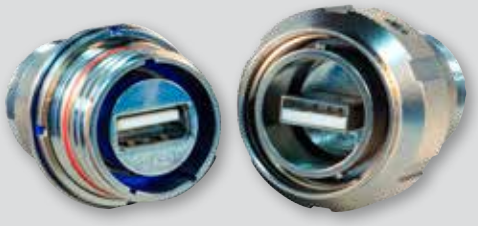

801-340 Page L-2
SuperSeal™ Coupler with Accessory Options and USB Male-to-Female (Plug) or Female-to-Female (Receptacle).

801-341 Page L-4
SuperSeal™ Connector with Accessory Options and USB Male (Plug) or Female (Receptacle) to Crimp Removable Contacts.

801-342 PC Tail or 801-343 Solder Cup Page L-6
SuperSeal™ Receptacles with USB Female Interface to PC Tail or Solder Cup Termination.

Series 804
Push/Pull



804-340 Page L-8
SuperSeal™ Coupler with Accessory Options and USB Male-to-Female (Plug) or Female-to-Female (Receptacle).

804-341 Page L-10
SuperSeal™ Connectors with Accessory Options and USB Male (Plug) or Female (Receptacle) to Rear Release Crimp Socket Contacts.

804-342 PC Tail and 801-343 Solder Cup Page L-12
SuperSeal™ Receptacles with USB Female Interface to PC Tail or Solder Cup Termination.

Series 805
Triple-Start



805-340 Page L-14
SuperSeal™ Coupler with Accessory Options and USB Male-to-Female (Plug) or Female-to-Female (Receptacle).

805-341 Page L-16
SuperSeal™ Connectors with Accessory Options and USB Male (Plug) or Female (Receptacle) to Rear Release Crimp Socket Contacts. .

805-342 PC Tail Page L-18
SuperSeal™ Receptacle with
USB Female Interface to PC Tail Termination.

805-343 Solder Cup Page L-20
SuperSeal™ Receptacle with
USB Female Interface to Solder Cup Termination.

© 2016 Glenair, Inc • 1211 Air Way, Glendale, CA 91201 • 818-247-6000 • www.glenair.com • U.S. CAGE code 06324 • SuperSeal™ Catalog
Dimensions in Inches (millimeters) are subject to change without notice.

USB 2.0 TYPE A

Series 801, 804 and 805 Mighty Mouse

801-340 Coupler with USB Male-to-Female (Plug) or Female-to-Female (Receptacle)

How To Order									
Sample Part Number	**801-340**	**-**	**NF**	**07**	**-16**	**2**	**A**	**A**	**H**

Series	**801-340**
Rear Accessory Option	**–** = Accessory Thread and Teeth **S** = Integrated Banding Platform **B** = Integrated Boot Adaptor
Material and Finish[1]	**NF** = Aluminum/Cadmium, Olive Drab **M** = Aluminum/Electroless Nickel **MT** = Aluminum/Nickel PTFE **ZNU** = Aluminum/Black Zinc Nickel
Shell Style[1]	**01** = In Line Receptacle **02** = Front or Rear Panel Mount Square Flange Receptacle **07** = Rear Panel Mount Jam Nut Receptacle **26** = Plug
Shell Size	**16** = Shell Size 16
USB Performance	**2** = USB 2.0
USB Type	**A** = Type A
Aternate Key Positions[1]	**A**, **B**, **C**, **D**, **E**, **F**
USB Orientation	**H** = Horizontal **V** = Vertical

NOTES

1. See Section A for recommended panel cutout dimensions, additional finishes and alternate keyway positions.
2. Meets IP67 sealing requirement in unmated condition

USB 2.0 ORIENTATION OPTIONS

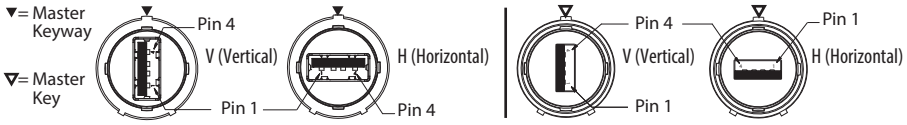

Dimensions											
Size Shell	Ø A	B Flat	C Threads	D Threads	Ø E	F Sq	G Bsc	Ø J	K Flat	M Threads	Ø N
16	1.040 (26.42)	1.010 (25.65)	1.0000-.1P-.2L-DS-2A	.9375-20 UNEF-2A	1.625 (41.28)	1.219 (30.96)	.981 (24.92)	1.264 (32.11)	1.230 (31.24)	1.0625-20 UN-2A	1.230 (31.24)

SHELL STYLE 01 INLINE RECEPTACLE

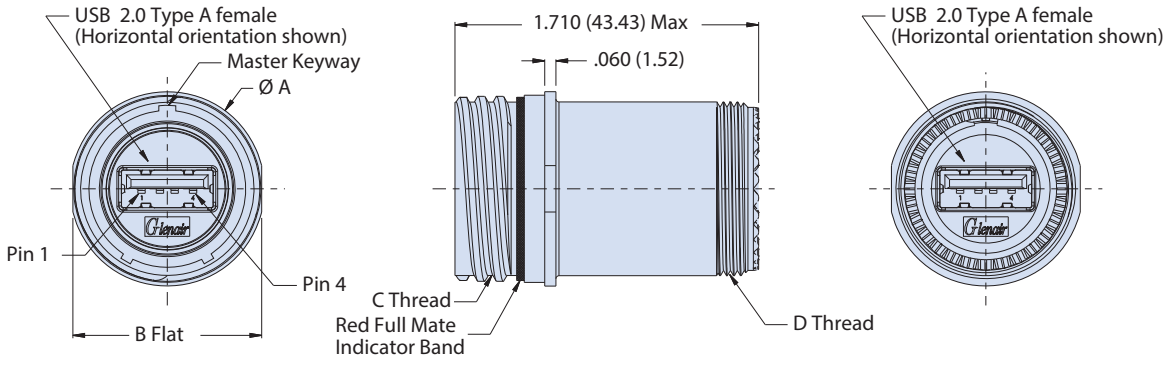

© 2016 Glenair, Inc • 1211 Air Way, Glendale, CA 91201 • 818-247-6000 • www.glenair.com • U.S. CAGE code 06324 • SuperSeal™ Catalog
Dimensions in Inches (millimeters) are subject to change without notice.

Series 801, 804 and 805 Mighty Mouse

801-340 Coupler with USB Male-to-Female (Plug) or Female-to-Female (Receptacle)

SHELL STYLE 02 FRONT OR REAR SQUARE FLANGE RECEPTACLE

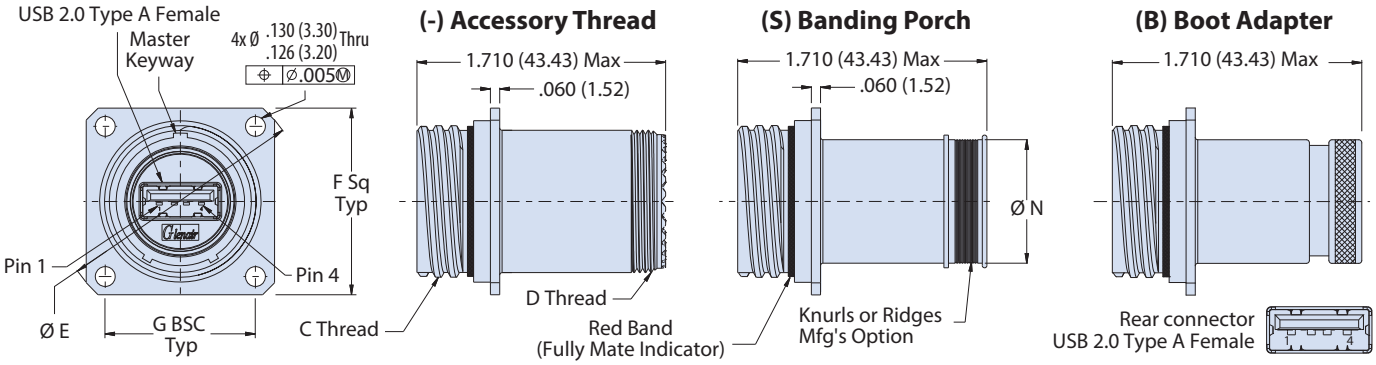

SHELL STYLE 07 REAR PANEL MOUNT JAM NUT RECEPTACLE

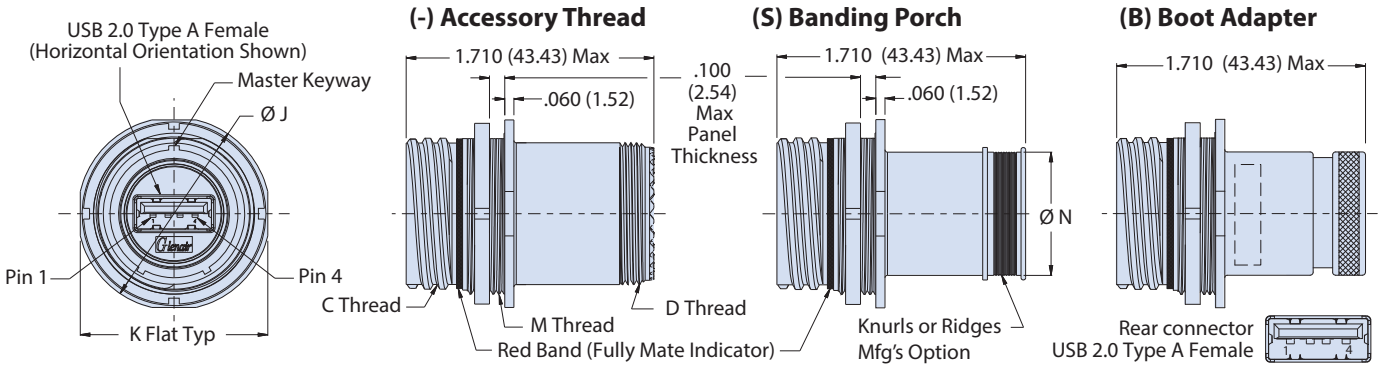

SHELL STYLE 26 PLUG

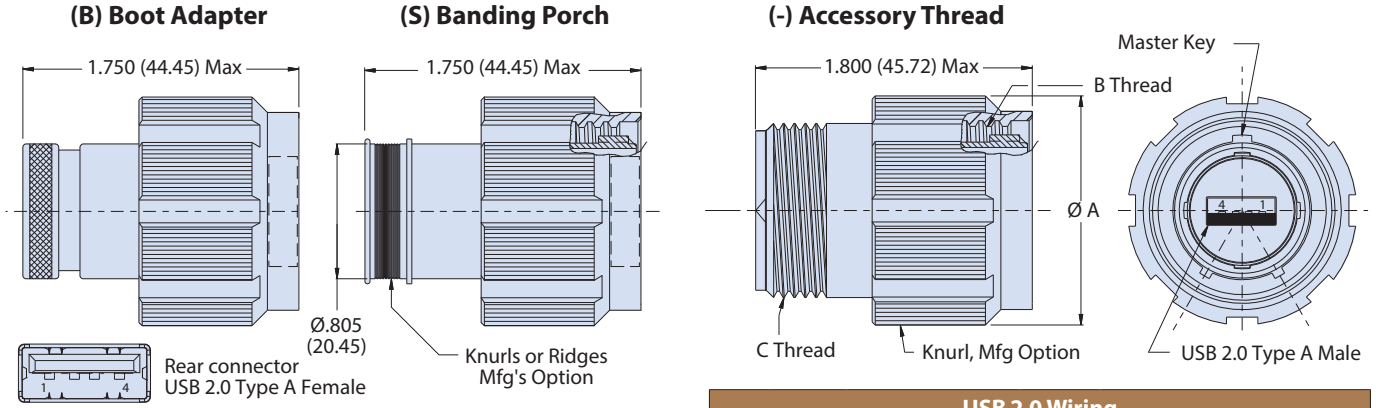

Plug Dimensions			
Shell Size	Ø A	B Threads	C Threads
16	1.340 (34.04)	1.0000-.1P-.2L-2B	.9375-20 UNEF-2A

USB 2.0 Wiring				
Pin	Name	Cable Color(USB)	Desc.	Recomended Wire Size (AWG)
1	(V Bus)	Red	+5 V	22
2	(D-)	White	Data -	28
3	(D+)	Green	Data +	28
4	(GND)	Black	Ground	22

© 2016 Glenair, Inc • 1211 Air Way, Glendale, CA 91201 • 818-247-6000 • www.glenair.com • U.S. CAGE code 06324 • SuperSeal™ Catalog
Dimensions in Inches (millimeters) are subject to change without notice.

RJ45/USB SUPER SEAL™

USB 2.0 TYPE A

Series 801, 804 and 805 Mighty Mouse

801-341 Connector with USB Male (Plug) or Female (Receptacle) to Crimp Removable Contacts

Glenair

How To Order									
Sample Part Number	**801-341**	**-**	**NF**	**07**	**-16**	**2**	**A**	**A**	**H**
Series	**801-341**								
Rear Accessory Option	**–** = Accessory Thread and Teeth **B** = Integrated Boot Adaptor **S** = Integrated Banding Platform								
Material and Finish[1]	**NF** = Aluminum/Cadmium, Olive Drab **M** = Aluminum/Electroless Nickel **MT** = Aluminum/Nickel PTFE **ZNU** = Aluminum/Black Zinc Nickel								
Shell Style[1]	**01** = In Line Receptacle **02** = Front or Rear Panel Mount Square Flange Receptacle **07** = Rear Panel Mount Jam Nut Receptacle **26** = Plug								
Shell Size	**16** = Shell Size 16								
USB Performance	**2** = USB 2.0								
USB Type	**A** = Type A								
Aternate Key Positions[1]	**A**, **B**, **C**, **D**, **E**, **F**; Omit for single keyway (non polarized)								
USB Orientation	**H** = Horizontal **V** = Vertical								

NOTES

1. See Section A for recommended panel cutout dimensions, additional finishes and alternate keyway positions.
2. Meets IP67 sealing requirement in unmated condition
3. Supplied with size 23 socket contacts (809-002 supplied loose) 1 extra contact provided
4. Material/Finish
   - Shell, jam nut: al alloy or cres
   - Seal/o-ring fluorosilicone

USB 2.0 Wiring				
Pin	**Name**	**Cable Color (USB)**	**Desc.**	**Recomended Wire Size (AWG)**
1	(V Bus)	Red	+5 V	22
2	(D-)	White	Data -	28
3	(D+)	Green	Data +	28
4	(GND)	Black	Ground	22

USB 2.0 ORIENTATION OPTIONS

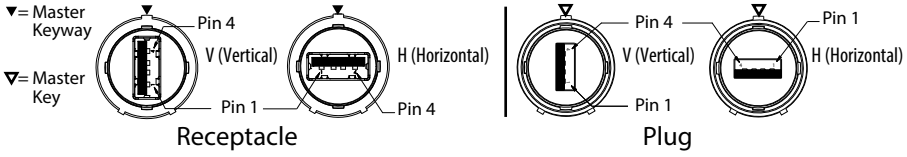

Receptacle Dimensions											
Size Shell	**Ø A**	**B Flat**	**C Threads**	**D Threads**	**Ø E**	**F Sq**	**G Bsc**	**Ø J**	**K Flat**	**M Threads**	**Ø N**
16	1.040 (26.42)	1.010 (25.65)	1.0000-.1P-.2L-DS-2A	.9375-20 UNEF-2A	1.625 (41.28)	1.219 (30.96)	.981 (24.92)	1.264 (32.11)	1.230 (31.24)	1.0625-20 UN-2A	1.230 (31.24)

SHELL STYLE 01 IN-LINE RECEPTACLE

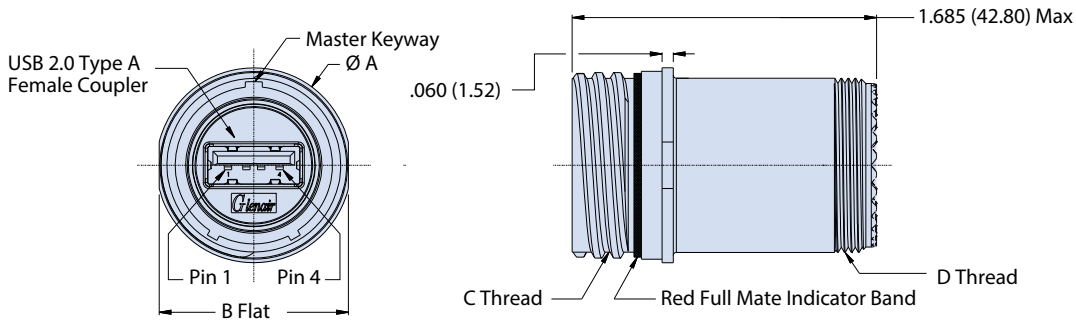

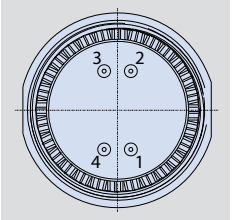

Rear contact positions apply to all shell styles

© 2016 Glenair, Inc • 1211 Air Way, Glendale, CA 91201 • 818-247-6000 • www.glenair.com • U.S. CAGE code 06324 • SuperSeal™ Catalog
Dimensions in Inches (millimeters) are subject to change without notice.

Series 801, 804 and 805 Mighty Mouse

801-341 Connector with USB Male (Plug) or Female (Receptacle) to Crimp Removable Contacts

SHELL STYLE 02 FRONT OR REAR PANEL MOUNT SQUARE FLANGE RECEPTACLE

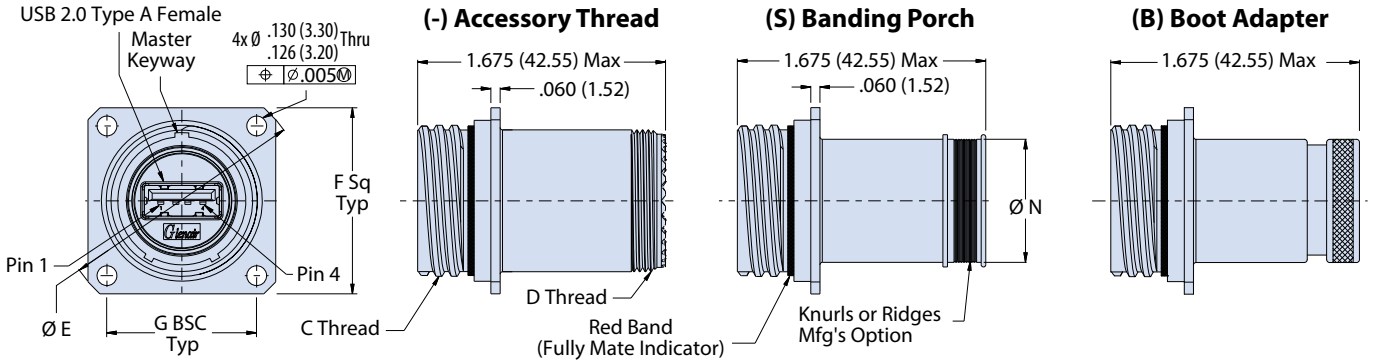

SHELL STYLE 07 REAR PANEL MOUNT JAM NUT RECEPTACLE

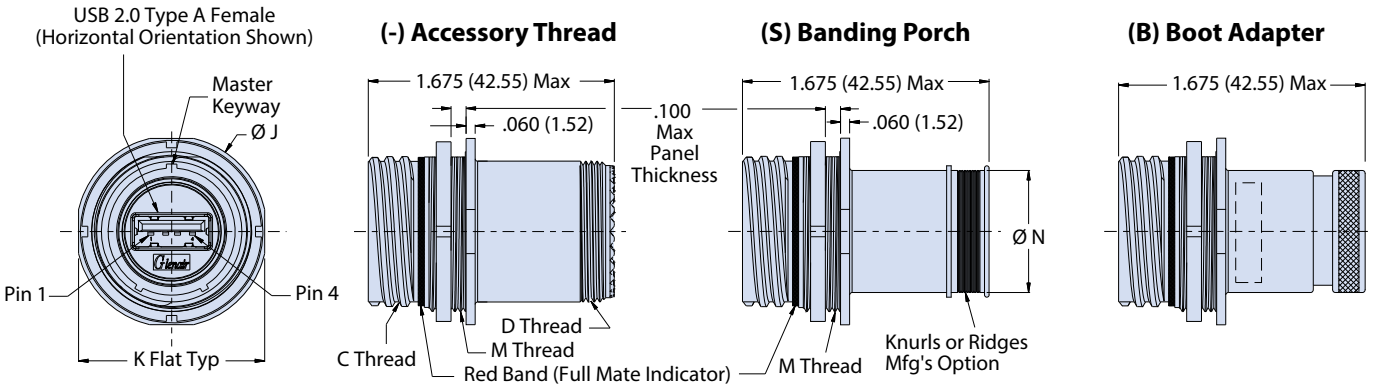

SHELL STYLE 26 PLUG

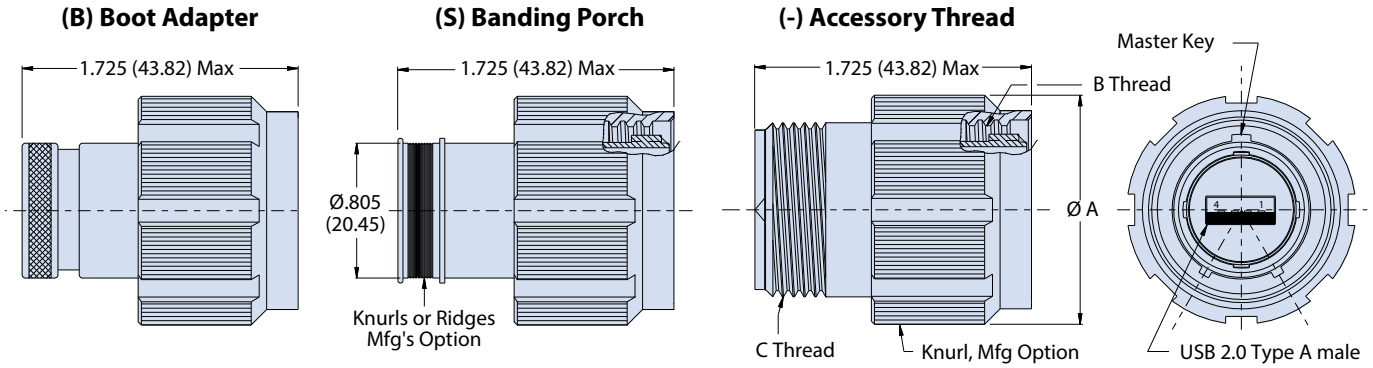

Plug Diameter			
Shell Size	**ØA**	**B Thread**	**C Threads**
16	1.340 (34.04)	1.0000-.1P-.2L-2B	.9375-20 UNEF-2A

© 2016 Glenair, Inc • 1211 Air Way, Glendale, CA 91201 • 818-247-6000 • www.glenair.com • U.S. CAGE code 06324 • SuperSeal™ Catalog
Dimensions in Inches (millimeters) are subject to change without notice.

USB 2.0 TYPE A

Series 801, 804 and 805 Mighty Mouse

801-342 or 801-343 Receptacles with USB Female Interface to PC Tail or Solder Cup Termination

How To Order								
Sample Part Number	**801-342**	**NF**	**07**	**-16**	**2**	**A**	**A**	**H**

Series	**801-342** = PC Tail **801-343** = Solder Cup
Material and Finish[1]	**NF** = Aluminum/Cadmium, Olive Drab **M** = Aluminum/Electroless Nickel **MT** = Aluminum/Nickel PTFE **ZNU** = Aluminum/Black Zinc Nickel
Shell Style[1]	**02** = Front or Rear, Square Flange Panel Mount Receptacle **07** = Jam Nut Receptacle, Rear Panel Mount
Shell Size	**16** = Shell Size 16
USB Performance	**2** = USB 2.0
USB Type	**A** = Type A
Aternate Key Positions[1]	**A**, **B**, **C**, **D**, **E**, **F**
USB Orientation	**H** = Horizontal **V** = Vertical

Dimensions							
Size Shell	**C Threads**	**Ø E**	**F Sq**	**G Bsc**	**Ø J**	**K Flat**	**M Threads**
16	1.0000-.1P-.2L-DS-2A	1.625 (41.28)	1.219 (30.96)	0.981 (24.92)	1.264 (32.11)	1.230 (31.24)	1.0625-20 UN-2A

USB 2.0 Wiring				
Pin	**Name**	**Cable Color (USB)**	**Description**	**Recommended Wire Size (AWG)**
1	(V Bus)	Red	+5 V	22
2	(D-)	White	Data -	28
3	(D+)	Green	Data +	28
4	(GND)	Black	Ground	22

USB 2.0 ORIENTATION OPTIONS

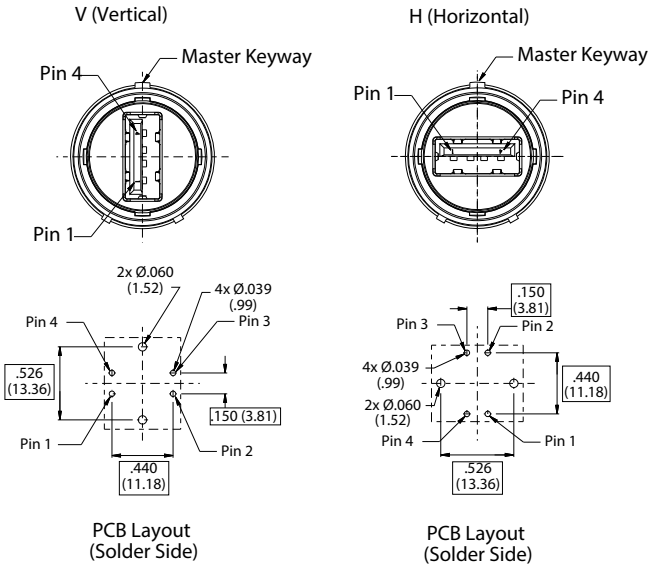

PCB layouts apply to 801-342. USB orientation applies to 801-342 and 801-343

© 2016 Glenair, Inc • 1211 Air Way, Glendale, CA 91201 • 818-247-6000 • www.glenair.com • U.S. CAGE code 06324 • SuperSeal™ Catalog
Dimensions in Inches (millimeters) are subject to change without notice.

Series 801, 804 and 805 Mighty Mouse

801-342 or 801-343 Receptacles with USB Female Interface to PC Tail or Solder Cup Termination

SHELL STYLE 02 SQUARE FLANGE RECEPTACLE FOR 801-342 PC TAIL AND 801-343 SOLDER CUP

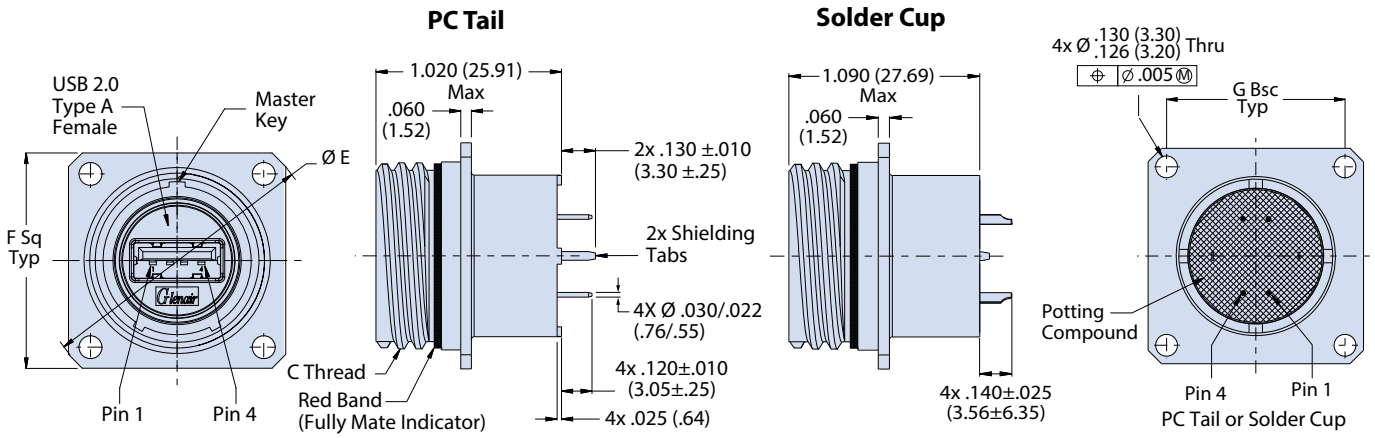

SHELL STYLE 07 JAM NUT RECEPTACLE FOR 801-342 PC TAIL AND 801-343 SOLDER CUP

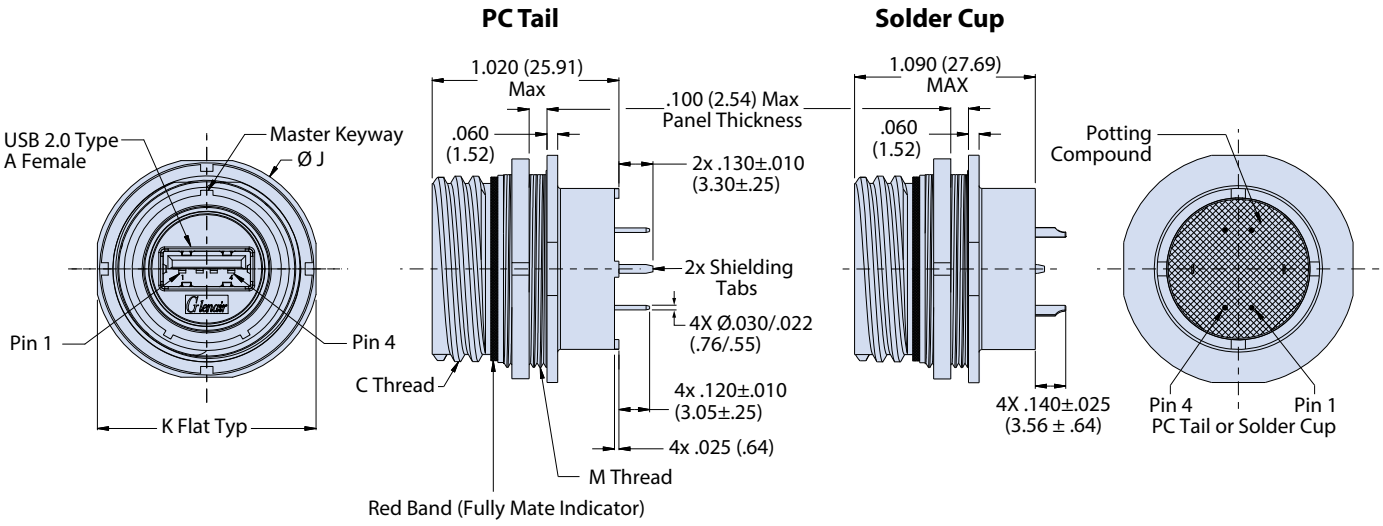

NOTES

1. See Section A for recommended panel cutout dimensions, additional finishes and alternate keyway positions.
2. Meets IP67 sealing requirement in unmated condition
3. Material/Finish
   - Shell, jam nut: al alloy or cres
   - Seal/o-ring fluorosilicone
   - Sealant: RTV

© 2016 Glenair, Inc • 1211 Air Way, Glendale, CA 91201 • 818-247-6000 • www.glenair.com • U.S. CAGE code 06324 • SuperSeal™ Catalog
Dimensions in Inches (millimeters) are subject to change without notice.

RJ45/USB SUPER SEAL™

USB 2.0 TYPE A

Series 801, 804 and 805 Mighty Mouse

804-340 Coupler with USB Male-to-Female (Plug) or Female-to-Female (Receptacle)

How To Order									
Sample Part Number	**804-340**	**-**	**NF**	**07**	**-14**	**2**	**A**	**A**	**H**

Series	**804-340**
Rear Accessory Option	**–** = Accessory Thread and Teeth **B** = Integrated Boot Adaptor **S** = Integrated Banding Platform
Material and Finish[1]	**NF** = Aluminum/Cadmium Olive Drab **M** = Aluminum/Electroless Nickel **MT** = Aluminum/Nickel PTFE **ZNU** = Aluminum/Black Zinc Nickel
Shell Style[1]	**01** = In Line Receptacle **00** = Jam Nut Receptacle, Front Panel Mount **07** = Jam Nut Receptacle, Rear Panel Mount **06** = Plug
Shell Size	**14** = Shell Size 14
USB Performance	**2** = USB 2.0
USB Type	**A** = Type A
Aternate Key Positions[1]	**A**, **B**, **C**, **D**, **E**, **F**; Omit for single keyway (non polarized)
USB Orientation	**H** = Horizontal **V** = Vertical

USB 2.0 Wiring				
Pin	**Name**	**Cable Color (USB)**	**Desc.**	**Recommended Wire Size (AWG)**
1	(V Bus)	Red	+5 V	22
2	(D-)	White	Data -	28
3	(D+)	Green	Data +	28
4	(GND)	Black	Grnd	22

USB 2.0 ORIENTATION OPTIONS

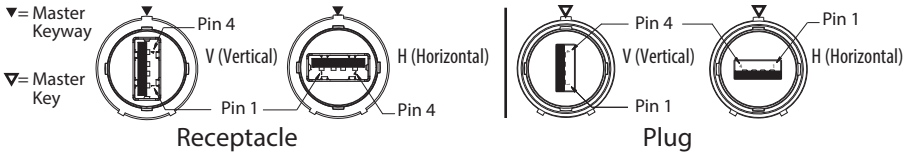

Dimensions						
Size Shell	**Mounting Style**	**Ø A**	**B Threads**	**C Threads**	**Ø D**	**K Threads**
14	Front Mount	--	--	.9375-20 UNEF-2A	1.390 (35.31)	1.0620-20 UN-2A
	Rear Mount	1.325 (33.66)	1.0000-28 UN-2A	.9375-20 UNEF-2A	--	--

SHELL STYLE 01 IN-LINE RECEPTACLE

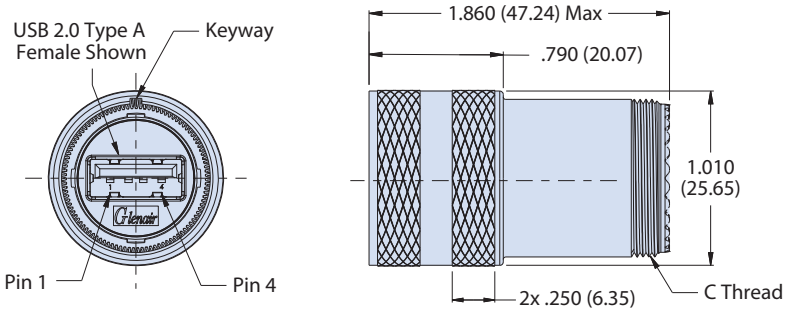

NOTES

1. See Section A for recommended panel cutout dimensions, additional finishes and alternate keyway positions.
2. Meets IP67 sealing requirement in unmated condition

© 2016 Glenair, Inc • 1211 Air Way, Glendale, CA 91201 • 818-247-6000 • www.glenair.com • U.S. CAGE code 06324 • SuperSeal™ Catalog
Dimensions in Inches (millimeters) are subject to change without notice.

SHELL STYLE 00 FRONT PANEL MOUNT JAM NUT RECEPTACLE

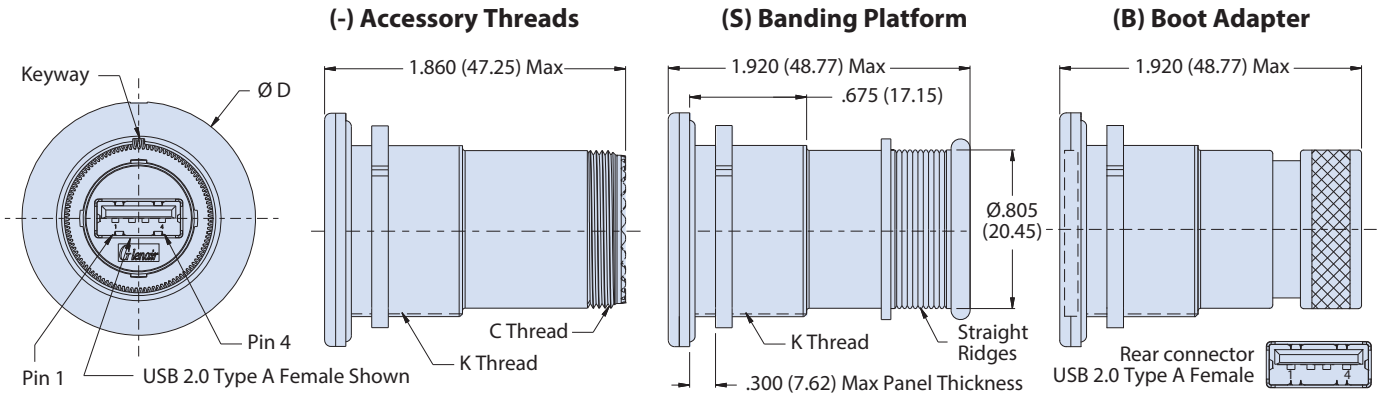

SHELL STYLE 07 REAR PANEL MOUNT JAM NUT RECEPTACLE

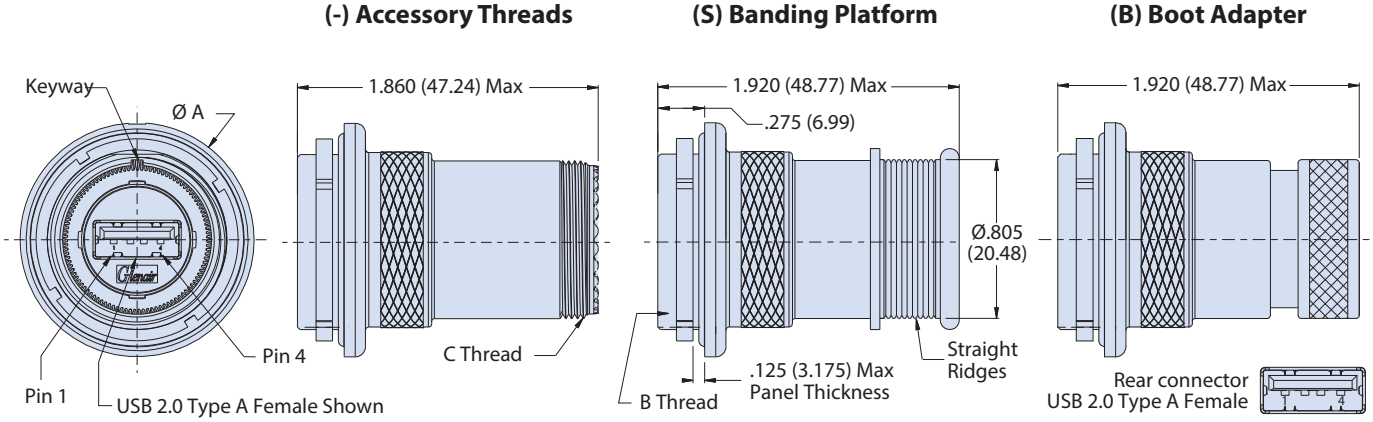

SHELL STYLE 06 PLUG

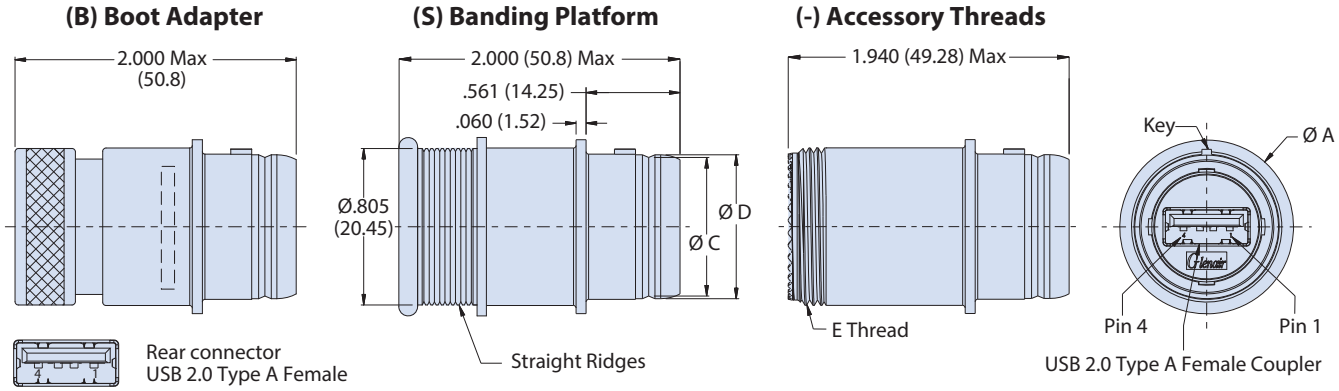

Plug Dimensions				
Size Shell	**Ø A Max**	**Ø C**	**Ø D**	**E Thd**
14	.985 (25.02)	.768 (19.51)	.800 (20.32)	.9375-20 UNEF-2A

© 2016 Glenair, Inc • 1211 Air Way, Glendale, CA 91201 • 818-247-6000 • www.glenair.com • U.S. CAGE code 06324 • SuperSeal™ Catalog
Dimensions in Inches (millimeters) are subject to change without notice.

RJ45/USB SUPER SEAL™

USB 2.0 TYPE A

Series 801, 804 and 805 Mighty Mouse

804-341 Connectors with USB Male (Plug) or Female (Receptacle) to Crimp Removable Contacts

How To Order									
Sample Part Number	**804-341**	**-**	**NF**	**07**	**-14**	**2**	**A**	**A**	**H**

Series	**804-341**
Rear Accessory Option	**–** = Accessory Thread and Teeth **B** = Integrated Boot Adaptor **S** = Integrated Banding Platform
Material and Finish[1]	**NF** = Aluminum/Cadmium, Olive Drab **MT** = Aluminum/Nickel PTFE **M** = Aluminum/Electroless Nickel **ZNU** = Aluminum/Black Zinc Nickel
Shell Style[1]	**01** = In Line Receptacle **00** = Front Panel Mount Jam Nut Receptacle **07** = Rear Panel Mount Jam Nut Receptacle **06** = Plug
Shell Size	**14** = Shell Size 14
USB Performance	**2** = USB 2.0
USB Type	**A** = Type A
Aternate Key Positions[1]	**A, B, C, D, E, F**; Omit for single keyway (non polarized)
USB Orientation	**H** = Horizontal **V** = Vertical

USB 2.0 Wiring				
Pin	**Name**	**Cable Color (USB)**	**Desc.**	**Recommended Wire Size (AWG)**
1	(V Bus)	Red	+5 V	22
2	(D-)	White	Data -	28
3	(D+)	Green	Data +	28
4	(GND)	Black	Ground	22

USB 2.0 ORIENTATION OPTIONS

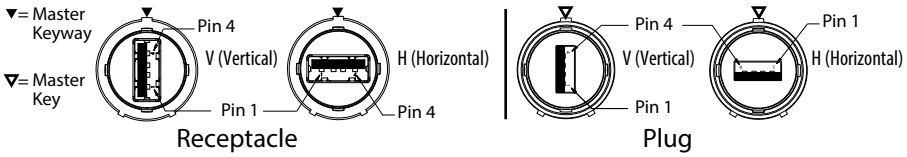

Receptacle Dimensions						
Shell Size	**Mounting Style**	**Ø A**	**B Threads**	**Ø D**	**K Threads**	**C Threads**
14	Front Mount	-	-	1.390 (35.31)	1.0620-20 UN-2A	.9375-20 UNEF-2A
	Rear Mount	1.325 (33.66)	1.0000-28 UN-2A	-	-	.9375-20 UNEF-2A

SHELL STYLE 01 IN-LINE RECEPTACLE

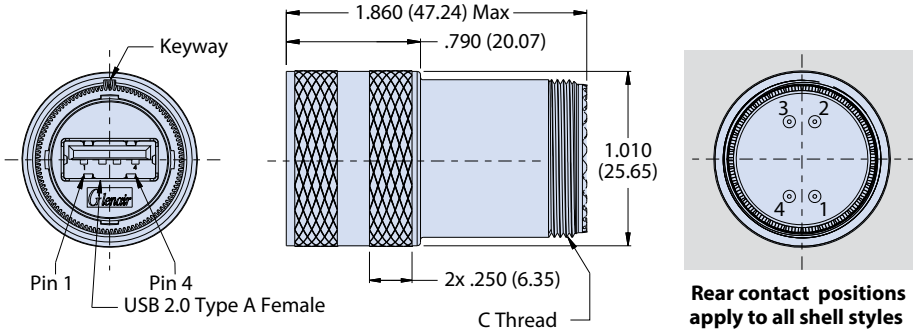

Rear contact positions apply to all shell styles

NOTES

1. See Section A for recommended panel cutout dimensions, additional finishes and alternate keyway positions.
2. Meets IP67 sealing requirement in unmated condition
3. Supplied with size 23 crimp socket contacts (809-002 supplied loose)
4. Material/finish
   - Shell, jam nut: al alloy or cres
   - Seal/o-ring: fluorosilicone

© 2016 Glenair, Inc • 1211 Air Way, Glendale, CA 91201 • 818-247-6000 • www.glenair.com • U.S. CAGE code 06324 • SuperSeal™ Catalog
Dimensions in Inches (millimeters) are subject to change without notice.

USB 2.0 TYPE A

Series 801, 804 and 805 Mighty Mouse

804-341 Connectors with USB Male (Plug) or Female (Receptacle) to Crimp Removable Contacts

SHELL STYLE 00 FRONT PANEL MOUNT JAM NUT RECEPTACLE

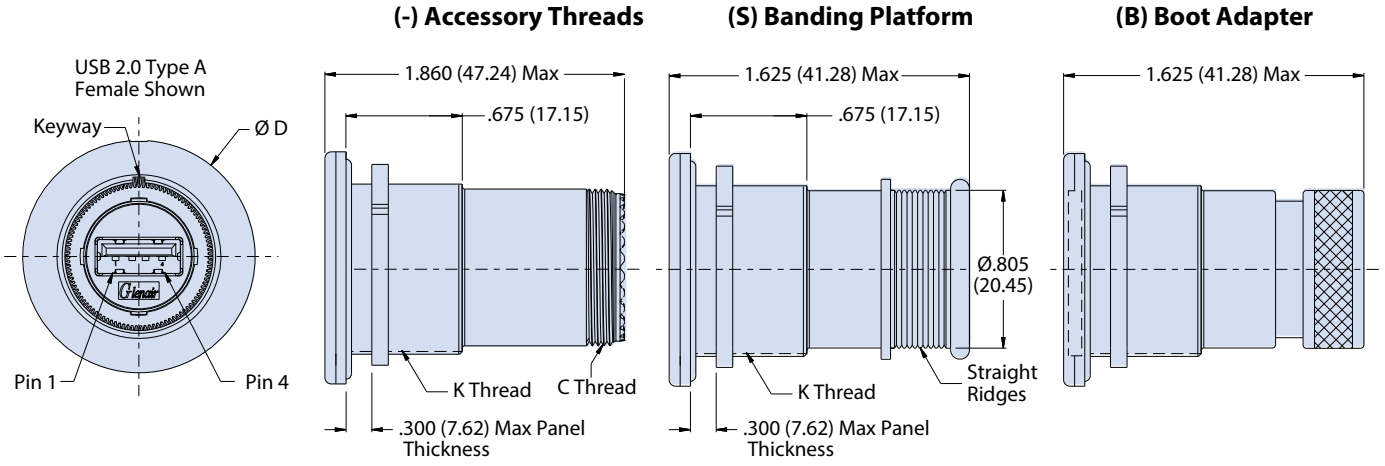

SHELL STYLE 07 REAR PANEL MOUNT JAM NUT RECEPTACLE

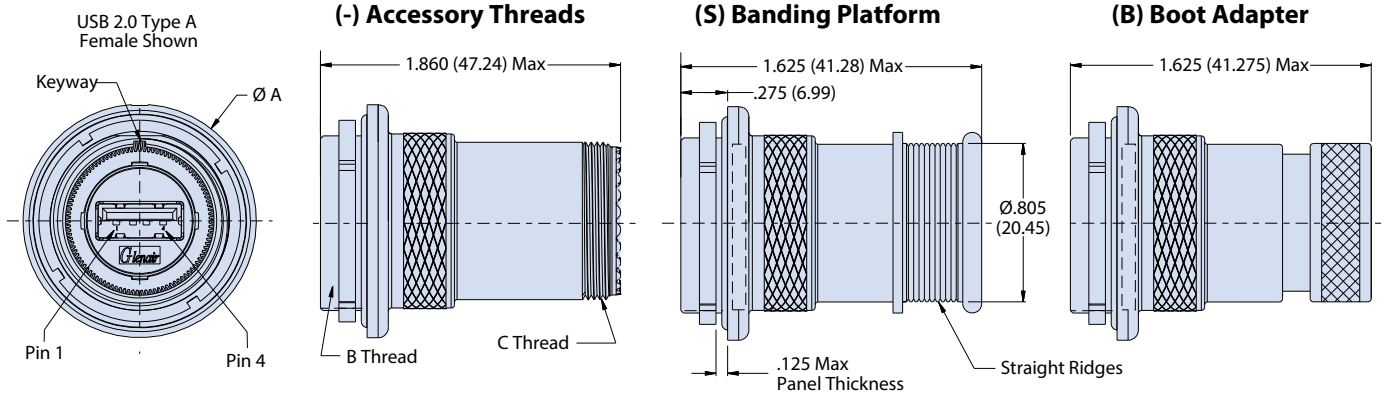

SHELL STYLE 16 PLUG

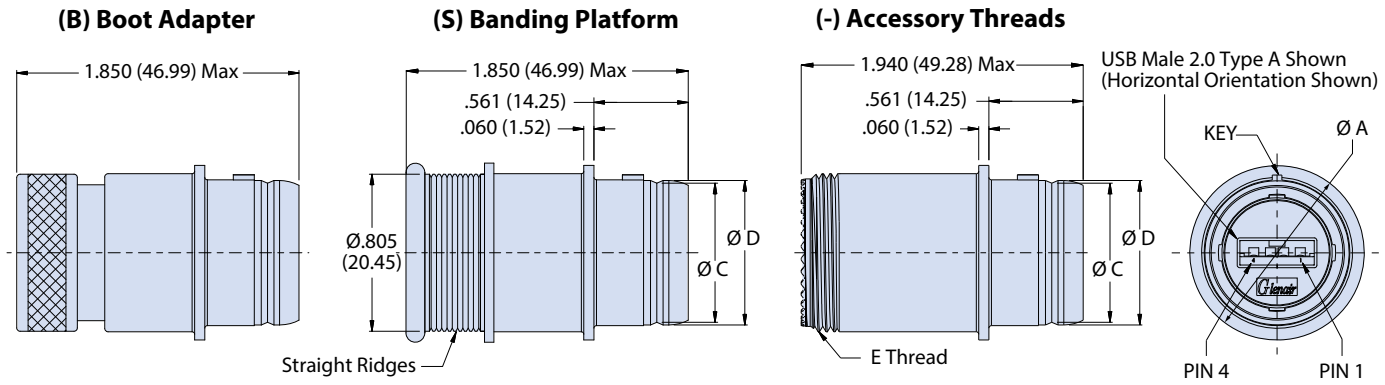

Plug Dimensions				
Shell Size	**Ø A**	**Ø C**	**Ø D**	**E Threads**
14	.985 (25.02)	.768 (19.51)	.800 (20.32)	.9375-20 UNEF-2A

© 2016 Glenair, Inc • 1211 Air Way, Glendale, CA 91201 • 818-247-6000 • www.glenair.com • U.S. CAGE code 06324 • SuperSeal™ Catalog
Dimensions in Inches (millimeters) are subject to change without notice.

USB 2.0 TYPE A

Series 801, 804 and 805 Mighty Mouse

804-342 or 804-343 Receptacles with USB Female Interface to PC Tail or Solder Cup Termination

How To Order								
Sample Part Number	**804-342**	**NF**	**07**	**-14**	**2**	**A**	**A**	**H**

Series	**804-342** = PC Tail **804-343** = Solder Cup
Material and Finish[1]	**NF** = Aluminum/Cadmium, Olive Drab **M** = Aluminum/Electroless Nickel **MT** = Aluminum/Nickel PTFE **ZNU** = Aluminum/Black Zinc Nickel
Shell Style[1]	**07** = Rear Panel Mount Jam Nut Receptacle **00** = Front Panel Mount Jam Nut Receptacle
Shell Size	**14** = Shell Size 14
USB Performance	**2** = USB 2.0
USB Type	**A** = Type A
Aternate Key Positions[1]	**A, B, C, D, E, F**; Omit for single keyway (non polarized)
USB Orientation	**H** = Horizontal **V** = Vertical

USB 2.0 Wiring

Pin	Name	Cable Color (USB)	Description	Recommended Wire Size (AWG)
1	(V Bus)	Red	+5 V	22
2	(D-)	White	Data -	28
3	(D+)	Green	Data +	28
4	(GND)	Black	Ground	22

Dimensions

Shell Size	Mounting Style	Ø A	B Threads	Ø D	K Threads	C Threads
14	FRONT MOUNT	-	-	1.390 (35.31)	1.0620-20 UN-2A	.9375-20 UNEF-2A
	REAR MOUNT	1.325 (33.66)	1.0000-28 UN-2A	-	-	.9375-20 UNEF-2A

USB 2.0 RECEPTACLE ORIENTATION OPTIONS AND PCB FOOTPRINT

V (VERTICAL)

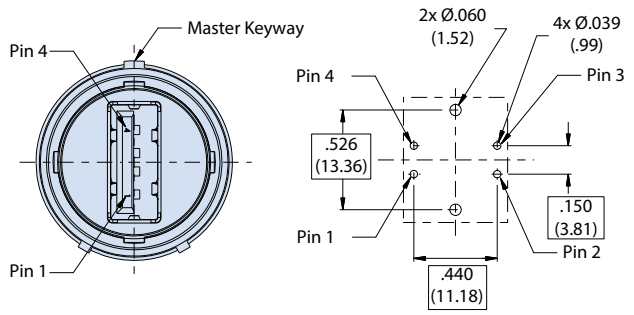

PCB Layout (Solder Side)

H (HORIZONTAL)

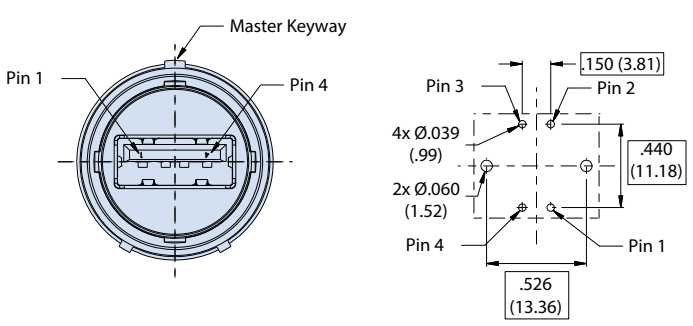

PCB Layout (Solder Side)

© 2016 Glenair, Inc • 1211 Air Way, Glendale, CA 91201 • 818-247-6000 • www.glenair.com • U.S. CAGE code 06324 • SuperSeal™ Catalog
Dimensions in Inches (millimeters) are subject to change without notice.

SHELL STYLE 07 JAM NUT RECEPTACLE FOR 804-342 PC TAIL AND 804-343 SOLDER CUP

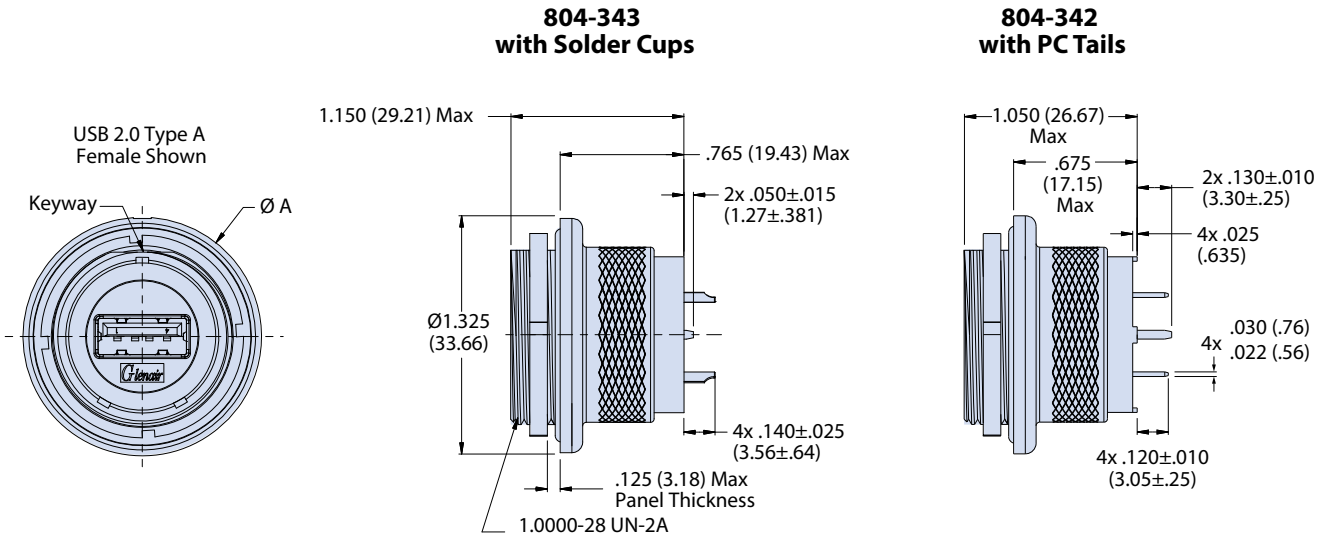

SHELL STYLE 00 JAM NUT RECEPTACLE FOR 804-342 PC TAIL AND 804-343 SOLDER CUP,

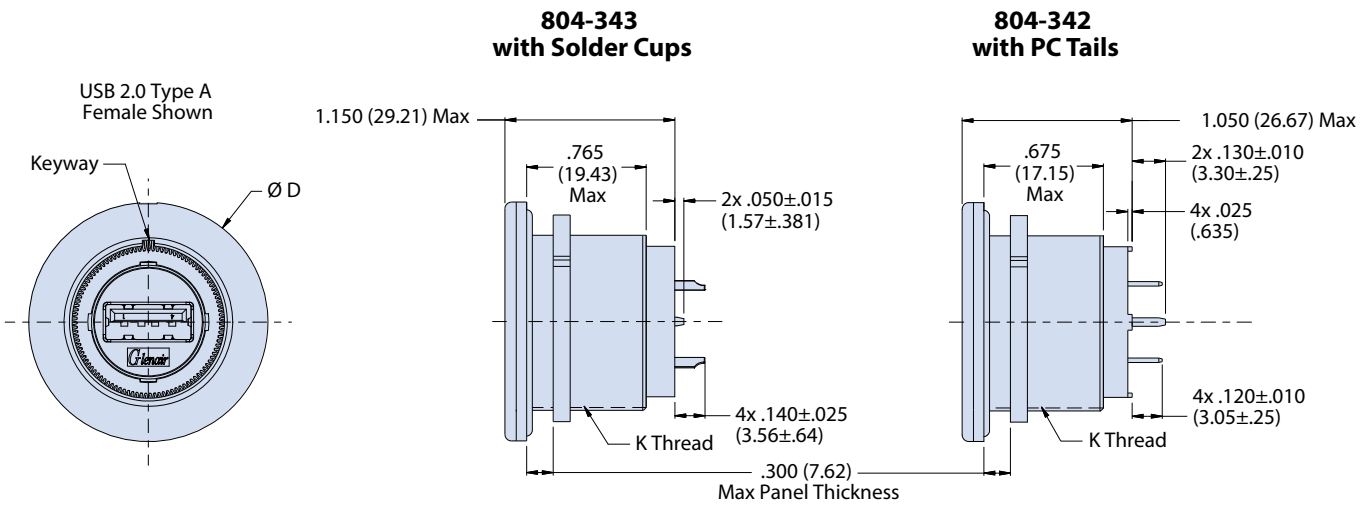

NOTES

1. See Section A for recommended panel cutout dimensions, additional finishes and alternate keyway positions.
2. Meets IP67 sealing requirement in unmated condition
3. Material/finish
   - Shell, jam nut: al alloy or cres
   - Seal/o-ring: fluorosilicone
   - Sealant RTV

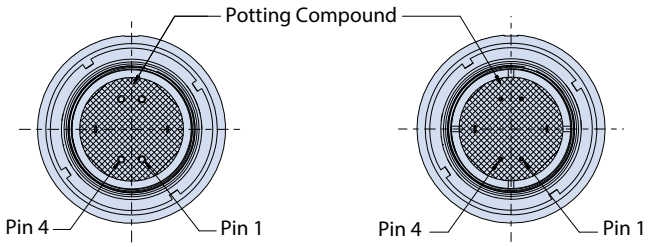

Solder Cup Layout **PC Tail Layout**

© 2016 Glenair, Inc • 1211 Air Way, Glendale, CA 91201 • 818-247-6000 • www.glenair.com • U.S. CAGE code 06324 • SuperSeal™ Catalog
Dimensions in Inches (millimeters) are subject to change without notice.

Series 801, 804 and 805 Mighty Mouse

805-340 Coupler with USB Male-to-Female (Plug) or Female-to-Female (Receptacle)

How To Order									
Sample Part Number	**805-340**	**-**	**NF**	**07**	**-18**	**2**	**A**	**A**	**H**

Series	**805-340**
Rear Accessory Option	**–** = Accessory Thread and Teeth **B** = Integrated Boot Adaptor **S** = Integrated Banding Platform
Material and Finish[1]	**NF** = Aluminum/Cadmium, Olive Drab **M** = Aluminum/Electroless Nickel **MT** = Aluminum/Nickel PTFE **ZNU** = Aluminum/Black Zinc Nickel
Shell Style[1]	**01** = In Line Receptacle **02** = Front or Rear Panel Mount Square Flange Receptacle **12** = Rear Panel Mount Square Flange Receptacle with "Non-Locking" Clinch Nuts **22** = Rear Panel Mount Square Flange Receptacle with "Locking" Clinch Nuts **07** = Rear Panel Mount Jam Nut Receptacle **16** = Plug
Shell Size	**18** = Shell Size 18
USB Performance	**2** = USB 2.0
USB Type	**A** = Type A
Aternate Key Positions[1]	**A, B, C, D, E, F**
USB Orientation	**H** = Horizontal **V** = Vertical

USB 2.0 Wiring				
Pin	**Name**	**Cable Color (USB)**	**Desc.**	**Recommended Wire Size (AWG)**
1	(V Bus)	Red	+5 V	22
2	(D-)	White	Data -	28
3	(D+)	Green	Data +	28
4	(GND)	Black	Ground	22

USB 2.0 ORIENTATION OPTIONS

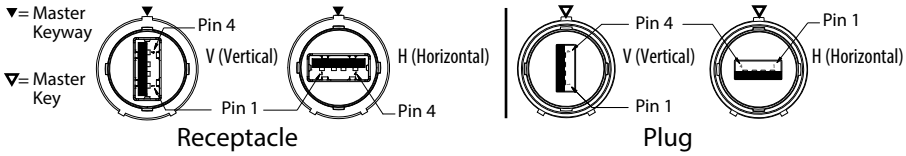

SHELL STYLE 16 PLUG

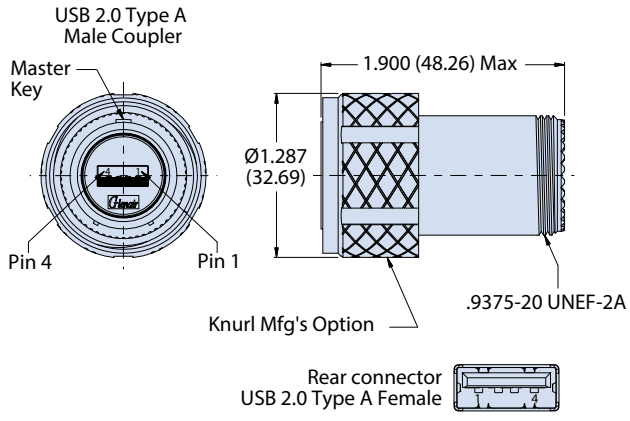

Accessory Thread Option

SHELL STYLE 01 IN-LINE RECEPTACLE

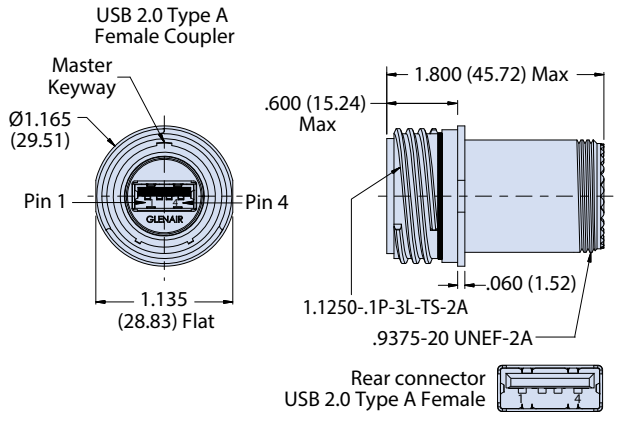

Accessory Thread Option

© 2016 Glenair, Inc • 1211 Air Way, Glendale, CA 91201 • 818-247-6000 • www.glenair.com • U.S. CAGE code 06324 • SuperSeal™ Catalog
Dimensions in Inches (millimeters) are subject to change without notice.

USB 2.0 TYPE A

Series 801, 804 and 805 Mighty Mouse

805-340 Coupler with USB Male-to-Female (Plug) or Female-to-Female (Receptacle)

SHELL STYLE 02 FRONT OR REAR PANEL MOUNT SQUARE FLANGE RECEPTACLE

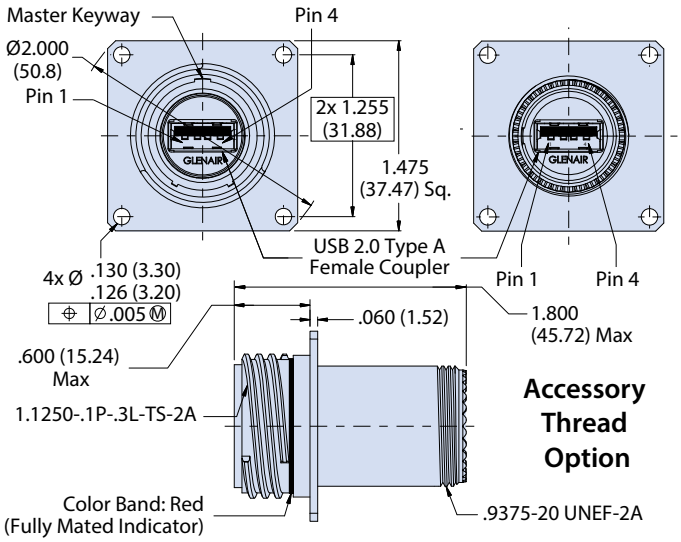

SHELL STYLE 12 & 22 FRONT OR REAR PANEL MOUNT RECEPTACLE WITH CLINCH NUTS

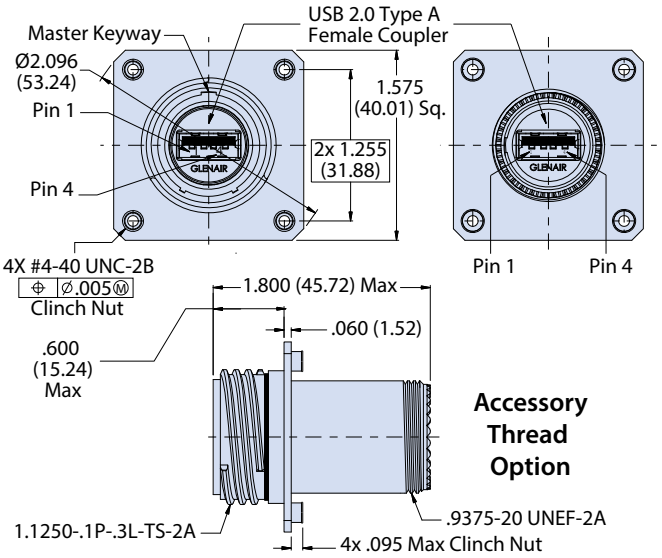

SHELL STYLE 07 REAR PANEL MOUNT JAM NUT RECEPTACLE

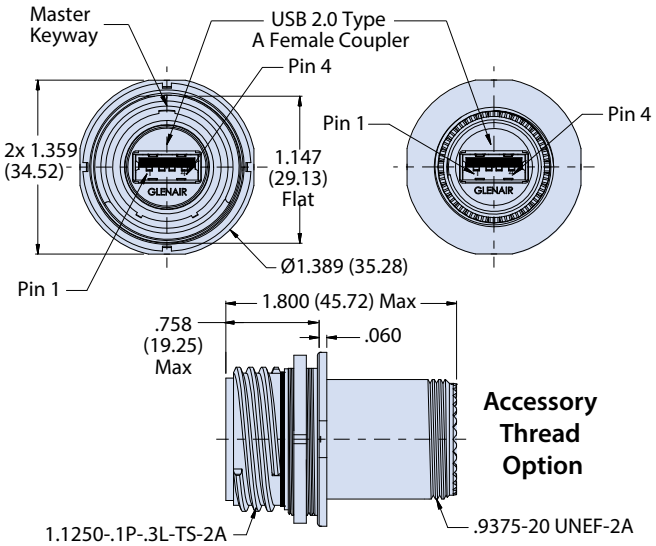

REAR ACCESSORY OPTIONS (AVAILABLE FOR IN-LINE ALSO)

Banding Platform (S) **Boot Adapter (B)**

Shell Style 02, 12, 22

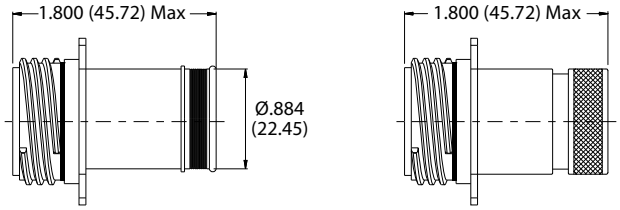

Shell Style 07

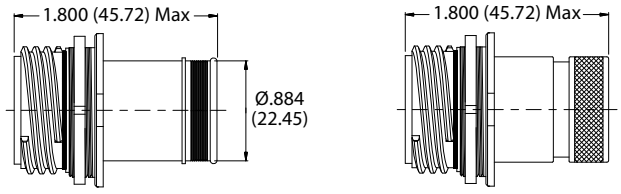

Shell Style 16

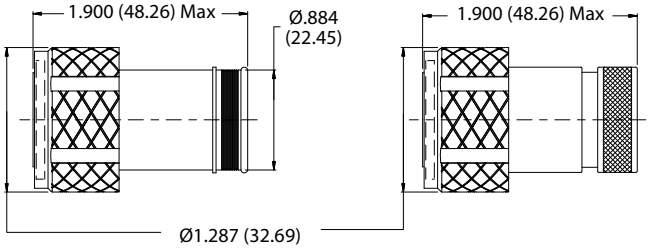

NOTES

1. See Section A for recommended panel cutout dimensions, additional finishes and alternate keyway positions.
2. Meets IP67 sealing requirement in unmated condition
3. Plugs are male/female and receptacles are female/female

© 2016 Glenair, Inc • 1211 Air Way, Glendale, CA 91201 • 818-247-6000 • www.glenair.com • U.S. CAGE code 06324 • SuperSeal™ Catalog
Dimensions in Inches (millimeters) are subject to change without notice.

USB 2.0 TYPE A

Series 801, 804 and 805 Mighty Mouse

805-341 Connectors with USB Male (Plug) or Female (Receptacle) to Crimp Removable Contacts

How To Order									
Sample Part Number	**805-341**	**-**	**NF**	**07**	**-18**	**2**	**A**	**A**	**H**

Series	**805-341**
Rear Accessory Option	**–** = Accessory Thread and Teeth **B** = Integrated Boot Adaptor **S** = Integrated Banding Platform
Material and Finish[1]	**NF** = Aluminum/Cadmium, Olive Drab **M** = Aluminum/Electroless Nickel **MT** = Aluminum/Nickel PTFE **ZNU** = Aluminum/Black Zinc Nickel
Shell Style[1]	**01** = In Line Receptacle **02** = Front or Rear Panel Mount Square Flange Receptacle **12** = Rear Panel Mount Square Flange Receptacle with "Non-Locking" Clinch Nuts **22** = Rear Panel Mount Square Flange Receptacle with "Locking" Clinch Nuts **07** = Rear Panel Mount Jam Nut Receptacle **16** = Plug
Shell Size	**18** = Shell Size 18
USB Performance	**2** = USB 2.0
USB Type	**A** = Type A
Aternate Key Positions[1]	**A, B, C, D, E, F**
USB Orientation	**H** = Horizontal **V** = Vertical

USB 2.0 Wiring				
Pin	**Name**	**Cable Color (USB)**	**Desc.**	**Recomended Wire Size (AWG)**
1	(V Bus)	Red	+5 V	22
2	(D-)	White	Data -	28
3	(D+)	Green	Data +	28
4	(GND)	Black	Ground	22

USB 2.0 ORIENTATION OPTIONS

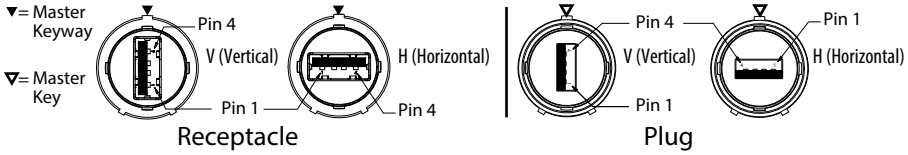

SHELL STYLE 16 PLUG

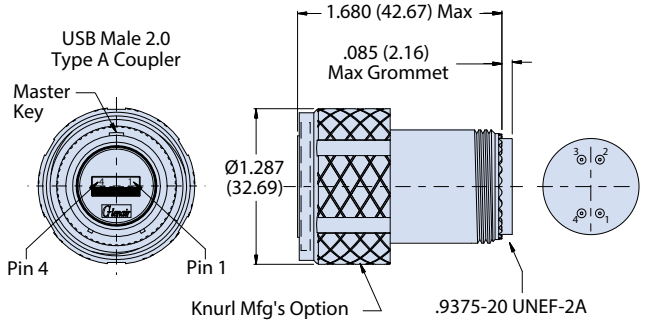

Accessory Thread Option

SHELL STYLE 01 IN-LINE RECEPTACLE

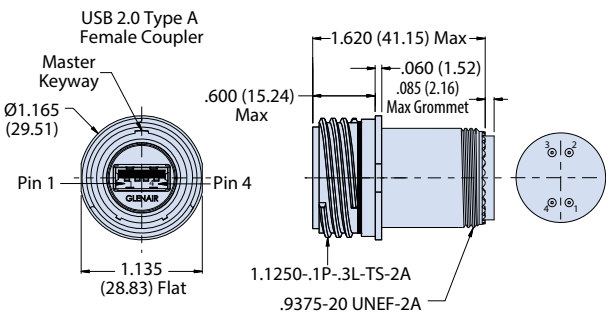

Accessory Thread Option

© 2016 Glenair, Inc • 1211 Air Way, Glendale, CA 91201 • 818-247-6000 • www.glenair.com • U.S. CAGE code 06324 • SuperSeal™ Catalog
Dimensions in Inches (millimeters) are subject to change without notice.

USB 2.0 TYPE A

Series 801, 804 and 805 Mighty Mouse

805-341 Connectors with USB Male (Plug) or Female (Receptacle) to Crimp Removable Contacts

SHELL STYLE 02 FRONT OR REAR PANEL MOUNT RECEPTACLE

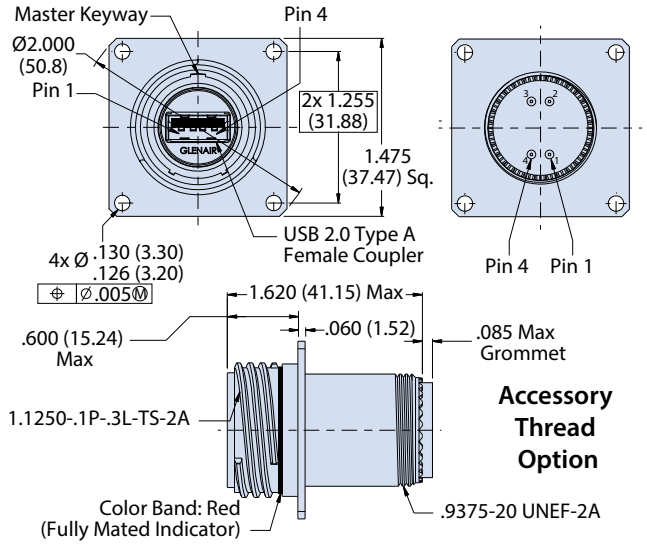

SHELL STYLE 12 & 22 REAR PANEL MOUNT RECEPTACLE WITH CLINCH NUTS

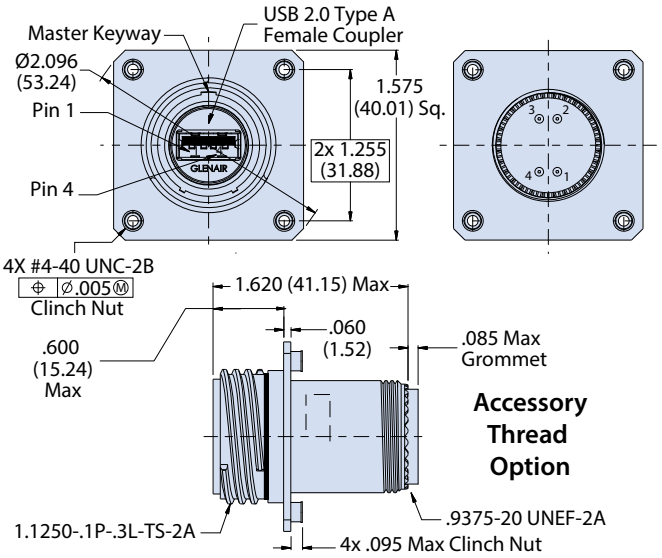

SHELL STYLE 07 REAR PANEL MOUNT JAM NUT RECEPTACLE

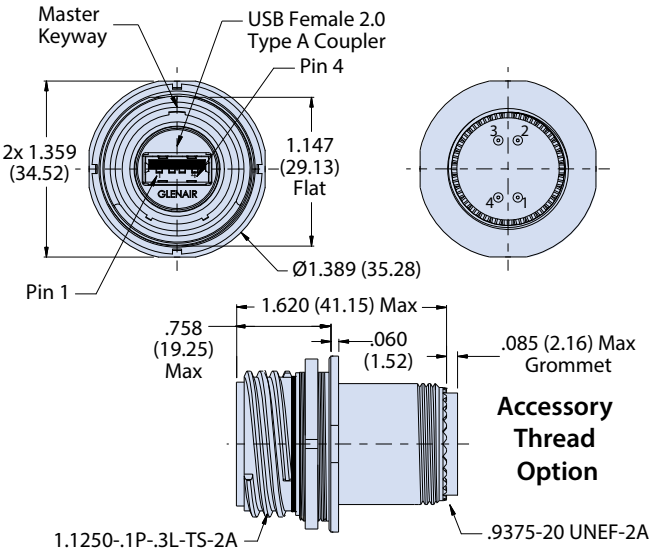

REAR ACCESSORY OPTIONS (AVAILABLE FOR IN-LINE ALSO)

Banding Platform (S) **Boot Adapter (B)**

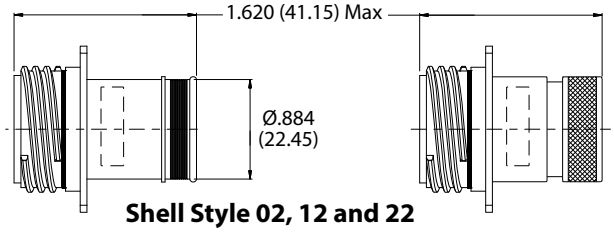

Shell Style 02, 12 and 22

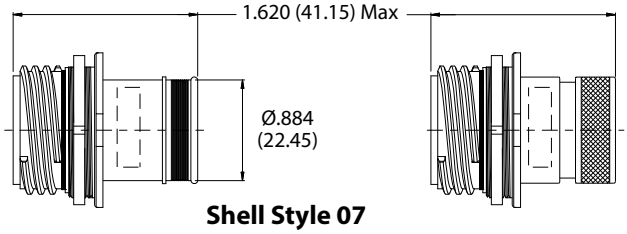

Shell Style 07

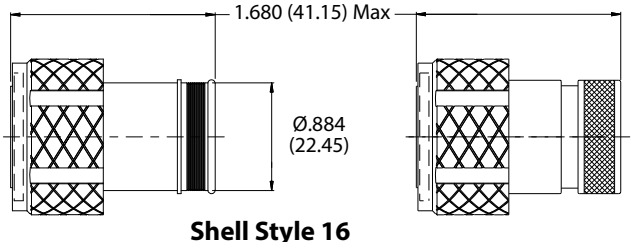

Shell Style 16

NOTES

1. See Section A for recommended panel cutout dimensions, additional finishes and alternate keyway positions.
2. Meets IP67 sealing requirement in unmated condition
3. Supplied with size 23 crimp socket contacts (809-002 supplied loose)

© 2016 Glenair, Inc • 1211 Air Way, Glendale, CA 91201 • 818-247-6000 • www.glenair.com • U.S. CAGE code 06324 • SuperSeal™ Catalog
Dimensions in Inches (millimeters) are subject to change without notice.

USB 2.0 TYPE A

Series 801, 804 and 805 Mighty Mouse

805-342 Receptacle with USB Female Interface to PC Tail Termination

How To Order								
Sample Part Number	**805-342**	**NF**	**07**	**-18**	**2**	**A**	**A**	**H**

Series	**805-342** = PC Tail
Material and Finish[1]	**NF** = Aluminum/Cadmium, Olive Drab **M** = Aluminum/Electroless Nickel **MT** = Aluminum/Nickel PTFE **ZNU** = Aluminum/Black Zinc Nickel
Shell Style[1]	**02** = Front or Rear Panel Mount Square Flange Receptacle **12** = Rear Panel Mount Square Flange Receptacle with "Non-Locking" Clinch Nuts **22** = Rear Panel Mount Square Flange Receptacle with "Locking" Clinch Nuts **07** = Rear Panel Mount Jam Nut Receptacle
Shell Size	**18** = Shell Size 18
USB Performance	**2** = USB 2.0
USB Type	**A** = Type A
Aternate Key Positions[1]	**A, B, C, D, E, F**
USB Orientation	**H** = Horizontal **V** = Vertical

USB 2.0 Wiring				
Pin	**Name**	**Cable Color (USB)**	**Description**	**Recommended Wire Size (AWG)**
1	(V Bus)	Red	+5 V	22
2	(D-)	White	Data -	28
3	(D+)	Green	Data +	28
4	(GND)	Black	Ground	22

USB 2.0 RECEPTACLE ORIENTATION OPTIONS AND PCB FOOTPRINT (PARTIAL VIEWS SHOWN)

V (VERTICAL)

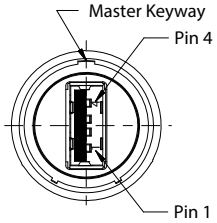

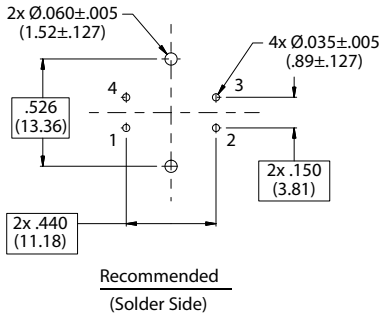

H (HORIZONTAL)

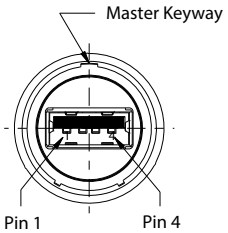

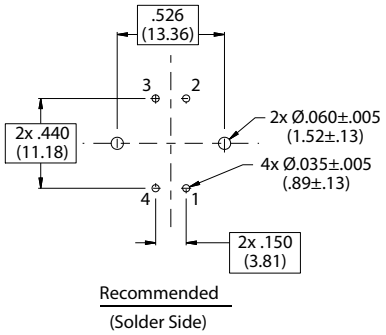

© 2016 Glenair, Inc • 1211 Air Way, Glendale, CA 91201 • 818-247-6000 • www.glenair.com • U.S. CAGE code 06324 • SuperSeal™ Catalog
Dimensions in Inches (millimeters) are subject to change without notice.

USB 2.0 TYPE A

Series 801, 804 and 805 Mighty Mouse

805-342 Receptacle with USB Female Interface to PC Tail Termination

SHELL STYLE 02 FRONT OR REAR PANEL MOUNT SQUARE FLANGE RECEPTACLE

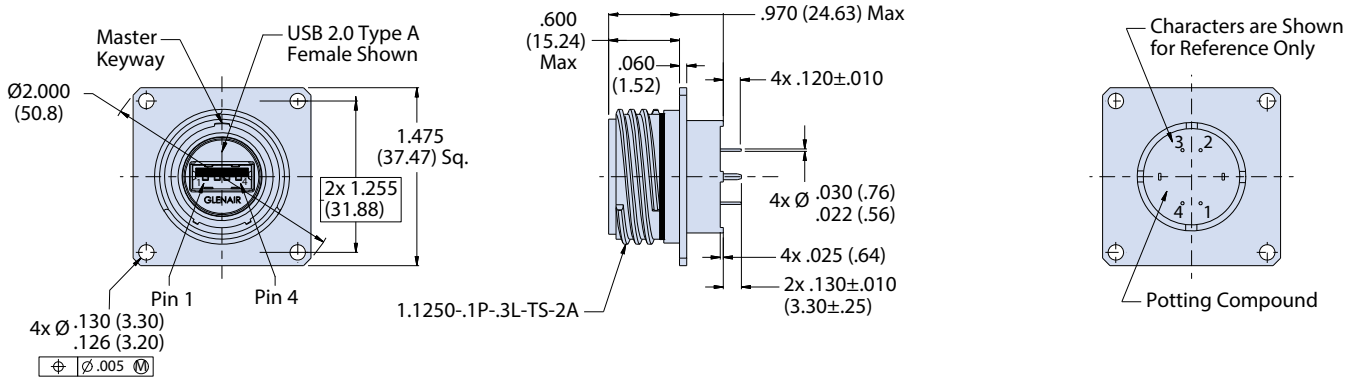

SHELL STYLE 12 AND 22 REAR PANEL MOUNT SQUARE FLANGE RECEPTACLE WITH CLINCH NUTS

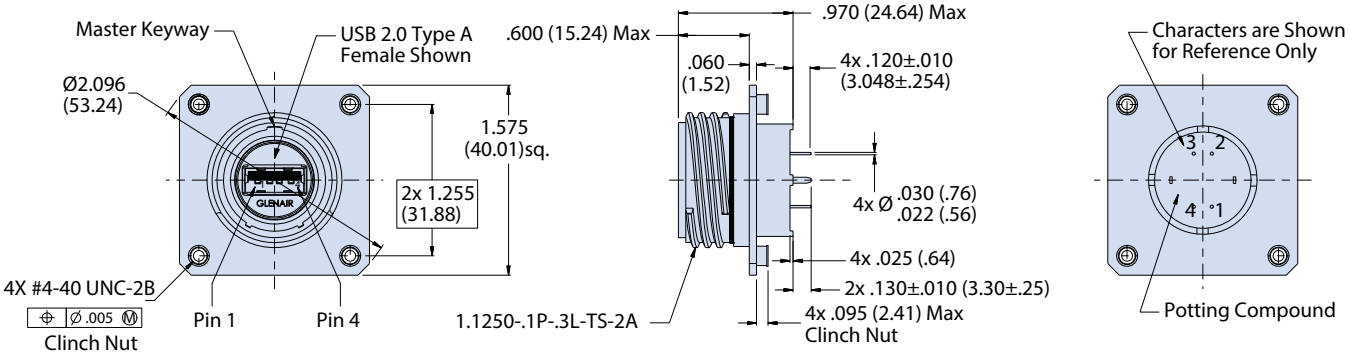

SHELL STYLE 07 JAM NUT

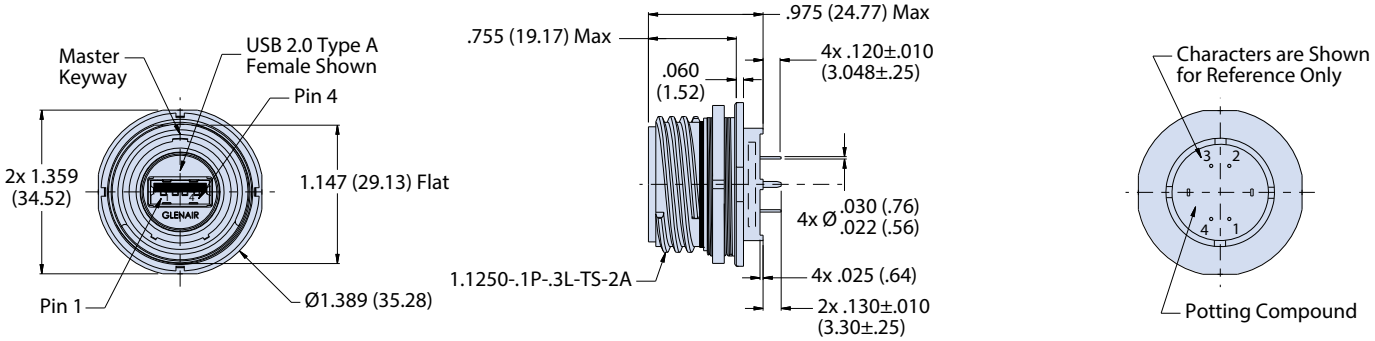

NOTES

1. See Section A for recommended panel cutout dimensions, additional finishes and alternate keyway positions.
2. Meets IP67 sealing requirement in unmated condition
3. Material/finish
   - Shell, jam nut: al alloy or cres
   - Seal/o-ring: fluorosilicone
   - Sealant: RTV

© 2016 Glenair, Inc • 1211 Air Way, Glendale, CA 91201 • 818-247-6000 • www.glenair.com • U.S. CAGE code 06324 • SuperSeal™ Catalog
Dimensions in Inches (millimeters) are subject to change without notice.

RJ45/USB SUPER SEAL™

USB 2.0 TYPE A

Series 801, 804 and 805 Mighty Mouse

805-343 Receptacle with USB Female Interface to Solder Cup Termination

Glenair®

How To Order								
Sample Part Number	**805-343**	**NF**	**07**	**-18**	**2**	**A**	**A**	**H**

Series	**805-343** = Solder Cup
Material and Finish[1]	**NF** = Aluminum/Cadmium, Olive Drab **M** = Aluminum/Electroless Nickel **MT** = Aluminum/Nickel PTFE **ZNU** = Aluminum/Black Zinc Nickel
Shell Style[1]	**01** = In-line **02** = Front or Rear Panel Mount Square Flange Receptacle **12** = Rear Panel Mount Square Flange Receptacle with "Non-Locking" Clinch Nuts **22** = Rear Panel Mount Square Flange Receptacle with "Locking" Clinch Nuts **07** = Rear Panel Mount Jam Nut Receptacle
Shell Size	**18** = Shell Size 18
USB Performance	**2** = USB 2.0
USB Type	**A** = Type A
Aternate Key Positions[1]	**A**, **B**, **C**, **D**, **E**, **F**
USB Orientation	**H** = Horizontal **V** = Vertical

USB 2.0 Wiring				
Pin	**Name**	**Cable Color (USB)**	**Description**	**Recommended Wire Size (AWG)**
1	(V Bus)	Red	+5 V	22
2	(D-)	White	Data -	28
3	(D+)	Green	Data +	28
4	(GND)	Black	Ground	22

USB 2.0 ORIENTATION OPTIONS

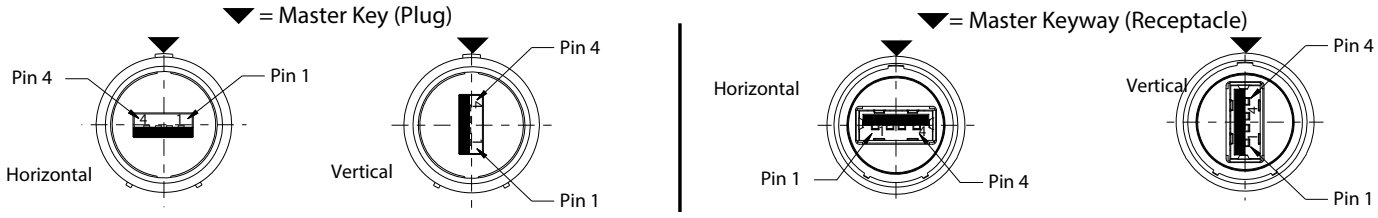

SHELL STYLE 01 IN-LINE RECEPTACLE

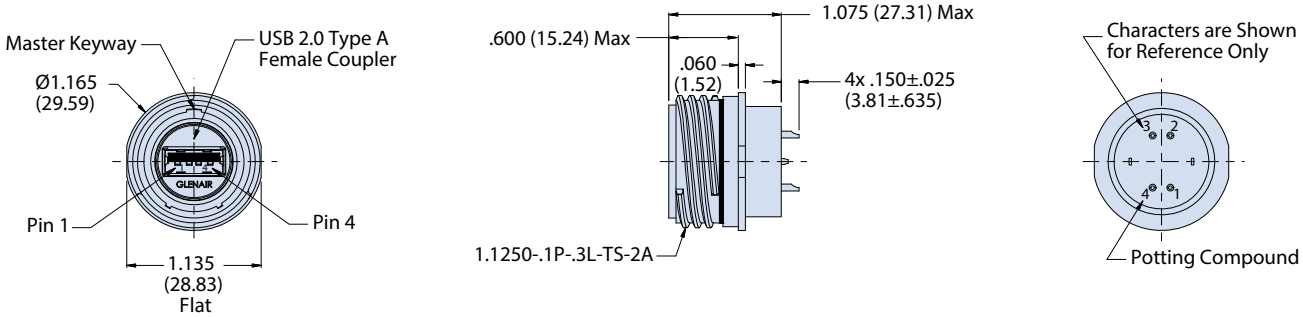

© 2016 Glenair, Inc • 1211 Air Way, Glendale, CA 91201 • 818-247-6000 • www.glenair.com • U.S. CAGE code 06324 • SuperSeal™ Catalog
Dimensions in Inches (millimeters) are subject to change without notice.

Series 801, 804 and 805 Mighty Mouse

805-343 Receptacle with USB Female Interface to Solder Cup Termination

SHELL STYLE 02 FRONT OR REAR PANEL MOUNT SQUARE FLANGE RECEPTACLE

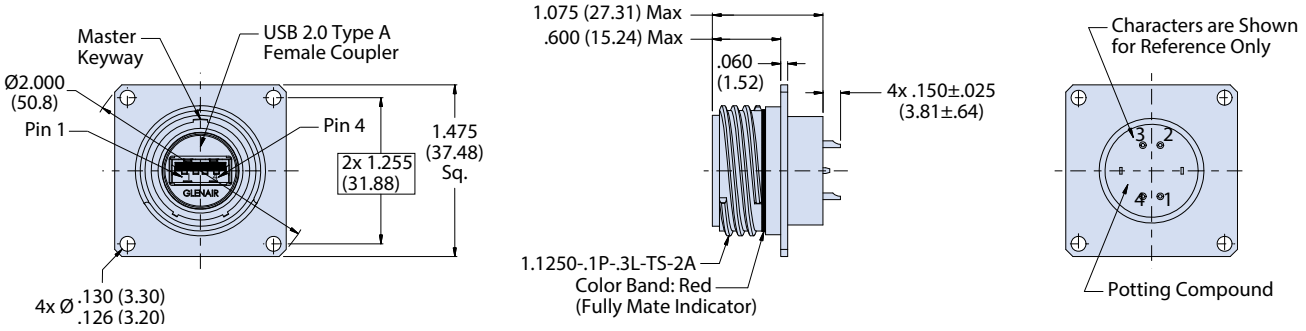

SHELL STYLE12 AND 22 REAR PANEL MOUNT RECEPTACLE WITH CLINCH NUTS

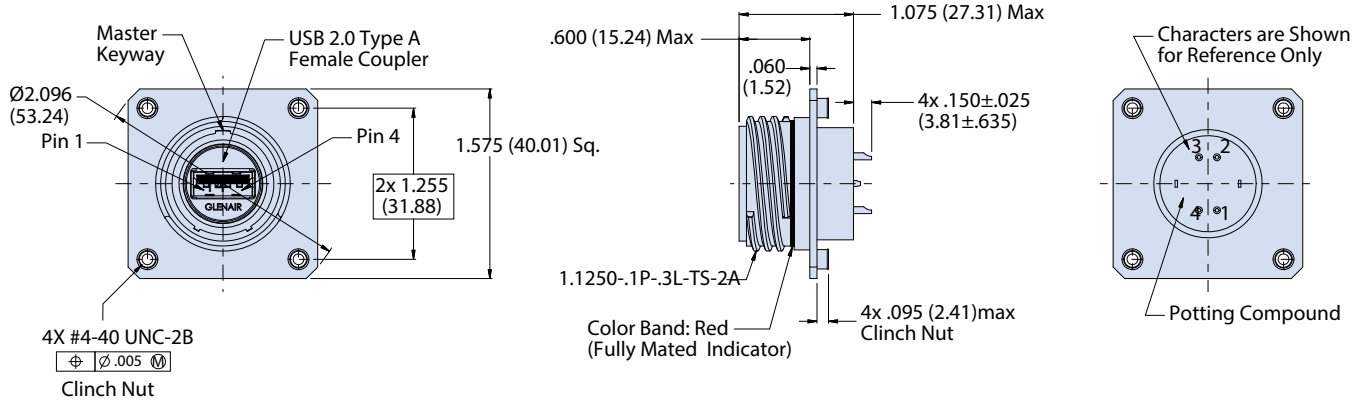

SHELL STYLE 07 REAR PANEL MOUNT JAM NUT RECEPTACLE

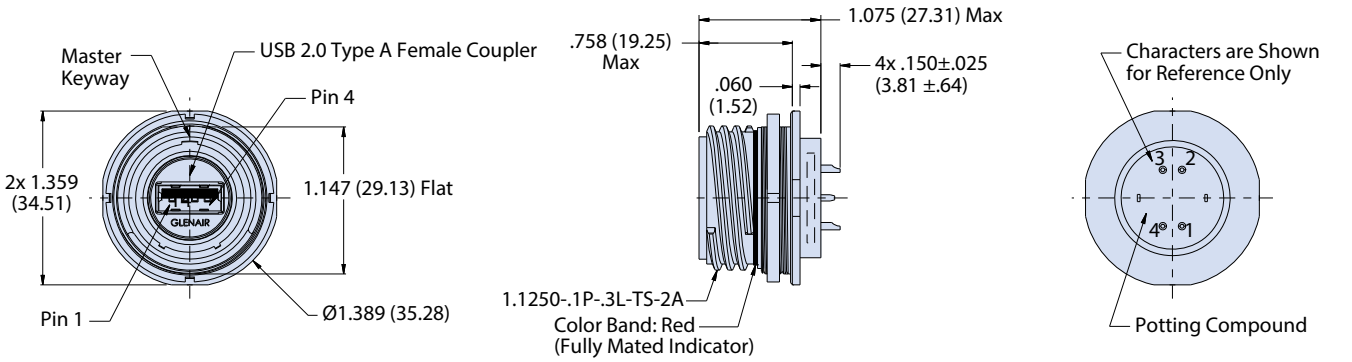

NOTES

1. See Section A for recommended panel cutout dimensions, additional finishes and alternate keyway positions.
2. Meets IP67 sealing requirement in unmated condition.
3. Max solder wire diameter of .025 inches
4. Material/finish
   - Shell, jam nut: al alloy or cres
   - Seal/o-ring: fluorosilicone
   - Sealant: RTV

© 2016 Glenair, Inc • 1211 Air Way, Glendale, CA 91201 • 818-247-6000 • www.glenair.com • U.S. CAGE code 06324 • SuperSeal™ Catalog

Dimensions in Inches (millimeters) are subject to change without notice.

Series 801, 804 and 805 Mighty Mouse

804-380 Connector with USB 3.2 Gen 2 Type C F-F Coupler

How To Order						
Sample Part Number	**804-380**	**-**	**NF**	**01**	**-12**	**A**

Series	**804-380** = F-F Coupler
Rear Accessory Option	**-** = Accessory Thread and Teeth **S** = Integrated Banding Platform **B** = Integrated Boot Adaptor
Material and Finish[1]	**NF** = Aluminum/Cadmium, Olive Drab **ME** = Aluminum/Electroless Nickel **MT** = Aluminum/Nickel PTFE **ZNU** = Aluminum/Black Zinc Nickel
Shell Style[1]	**01** = In-Line Receptacle **00** = Jam-nut Receptacle for Front Panel Mounting **07** = Jam-nut Receptacle for Rear Panel Mounting
Shell Size	**-12** = Shell Size 12
Aternate Key Positions[1]	**A**, **B**, **C**, **D**, **E**, **F**

NOTES

1. Interpret drawing per ASME Y14.5 - 2009.
2. Material/Finishes:
   - Shell, coupling nut, jam nut - AL alloy or CRES / see Mighty Mouse Series 804 catalog
   - Seal/O-ring - fluorosilicone
   - Hardware: stainless steel
3. USB Type C:
   - Housing: thermoplastic/NA
   - Shell: copper alloy/nickel plated
   - Terminal: copper alloy/gold plated
4. USB 3.2 Gen 2 (Type C) specifications:
   - Electrical: D.W.V.: 100 Vac
   - I.R.: 100 Megohms min.
   - Operating temperature range: -20°C to
   - +85°C
5. Performance: design meets USB 3.2 Gen 2 (Type C) benchmark data transfer rate requirements for read and write.
6. Sealing Rate: IP67 in unmated condition. IP68 in mated condition

PANEL CUTOUT DIMENSIONS

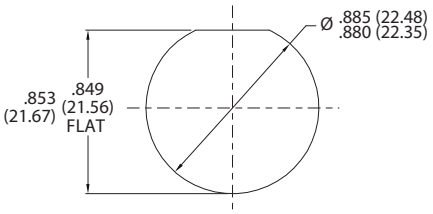

RECOMMENDED PANEL CUTOUT FOR FRONT MOUNT JAM NUT RECEPTACLE

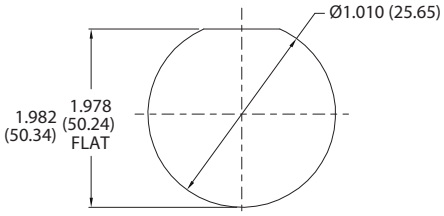

RECOMMENDED PANEL CUTOUT FOR FRONT MOUNT JAM NUT RECEPTACLE

Alternate Key and Keyway Positions		
Position	**A°**	**B°**
A	150°	210°
B	75°	210°
C	95°	230°
D	140°	275°
E	75°	275°
F	95°	210°

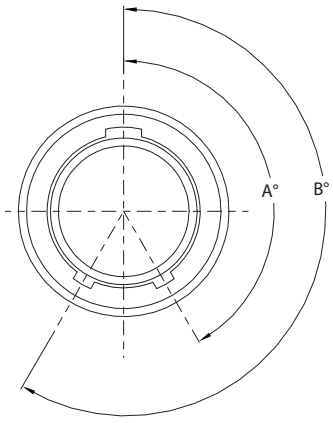

ORMAL AND ALTERNATE POSITION KEY ROTATION

© 2016 Glenair, Inc • 1211 Air Way, Glendale, CA 91201 • 818-247-6000 • www.glenair.com • U.S. CAGE code 06324 • SuperSeal™ Catalog
Dimensions in Inches (millimeters) are subject to change without notice.

SHELL STYLE 01 INLINE RECEPTACLE

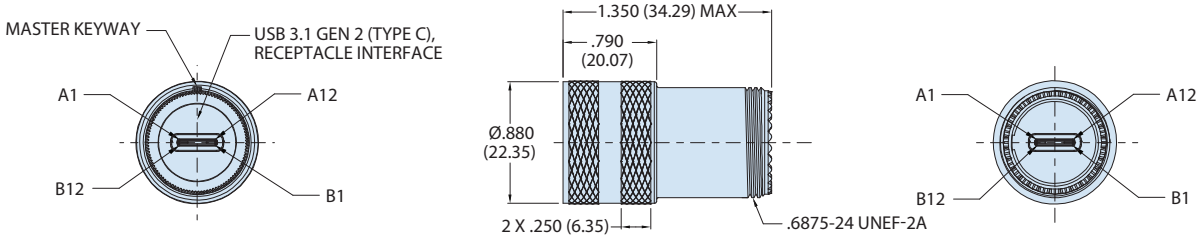

SHELL STYLE 00 JAM NUT RECEPTACLE FOR FRONT PANEL MOUNTING

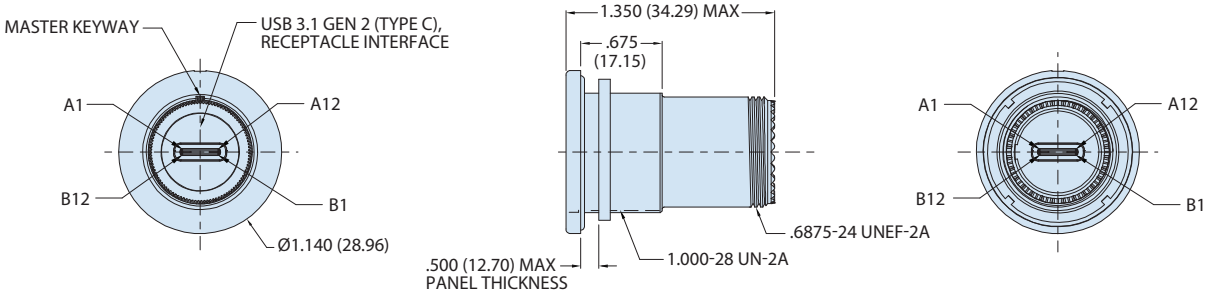

SHELL STYLE 07 JAM NUT RECEPTACLE FOR REAR PANEL MOUNTING

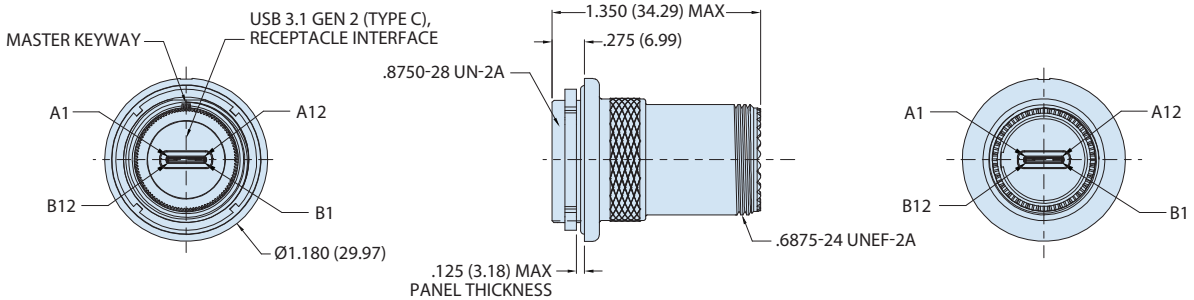

© 2016 Glenair, Inc • 1211 Air Way, Glendale, CA 91201 • 818-247-6000 • www.glenair.com • U.S. CAGE code 06324 • SuperSeal™ Catalog
Dimensions in Inches (millimeters) are subject to change without notice.

SHELL STYLE 01 INLINE RECEPTACLE

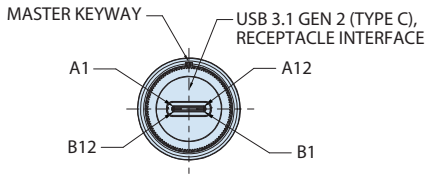

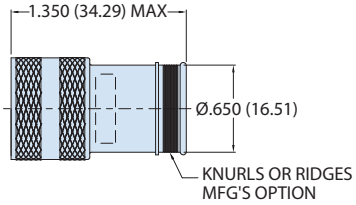

S - INTEGRATED BANDING PLATFORM

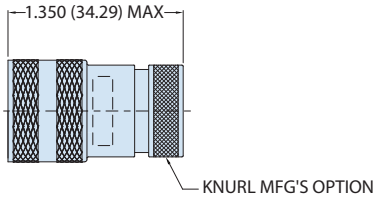

B - INTEGRATED BOOT ADAPTOR

SHELL STYLE 00 JAM NUT RECEPTACLE FOR FRONT PANEL MOUNTING

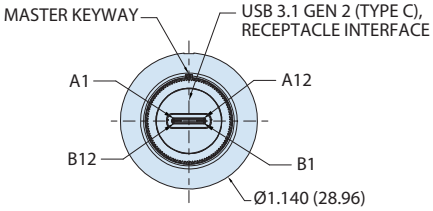

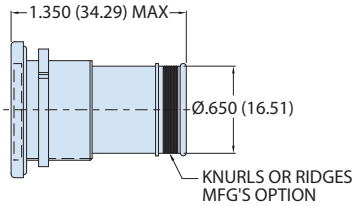

S - INTEGRATED BANDING PLATFORM

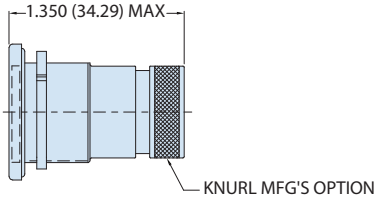

B - INEGRATED BOOT ADAPTOR

SHELL STYLE 07 JAM NUT RECEPTACLE FOR REAR PANEL MOUNTING

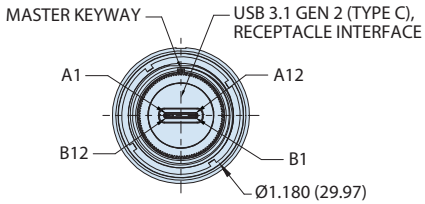

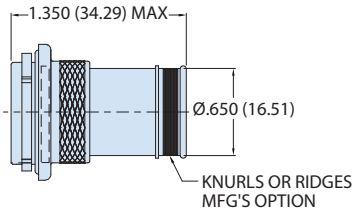

S - INTEGRATED BANDING PLATFORM

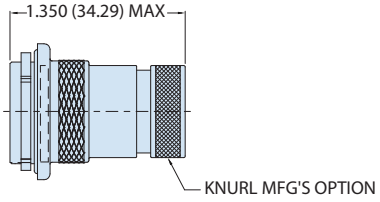

B - INEGRATED BOOT ADAPTOR

© 2016 Glenair, Inc • 1211 Air Way, Glendale, CA 91201 • 818-247-6000 • www.glenair.com • U.S. CAGE code 06324 • SuperSeal™ Catalog
Dimensions in Inches (millimeters) are subject to change without notice.

Series 801, 804 and 805 Mighty Mouse

804-382 Receptacle with USB Type C Interface to Solder Cup Termination

How To Order					
Sample Part Number	**804-382**	**NF**	**07**	**-12**	**A**

Series	**804-382** = PCB Mount
Material and Finish[1]	**NF** = Aluminum/Cadmium, Olive Drab **ME** = Aluminum/Electroless Nickel **MT** = Aluminum/Nickel PTFE **ZNU** = Aluminum/Black Zinc Nickel
Shell Style[1]	**00** = Jam-nut Receptacle for Front Panel Mounting **07** = Jam-nut Receptacle for Rear Panel Mounting
Shell Size	**12** = Shell Size 12
Alternate Key Positions[1]	**A, B, C, D, E, F**

PCB LAYOUT

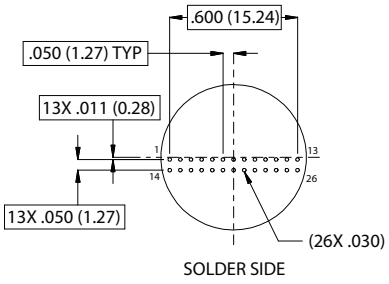

PANEL CUTOUT DIMENSIONS

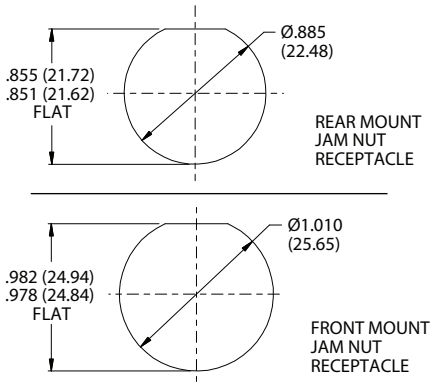

Alternate Key and Keyway Positions		
Position	A°	B°
A	150°	210°
B	75°	210°
C	95°	230°
D	140°	275°
E	75°	275°
F	95°	210°

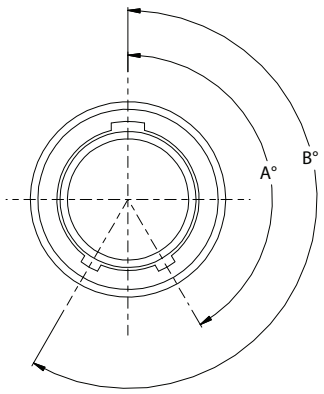

NORMAL AND ALTERNATE POSITION KEY ROTATION

NOTES

1. Connector designed to meet IP67 sealing requirement unmated condition
2. USB 3.2 Gen 2 (Type C) specifications:
- Performance: design meets USB 3.2 Gen 2 (Type C) benchmark data transfer rate requirements for read and write

Electrical:
- DWV: 100 VAC
- Insulation resistance: 100 MegOhms min.
- Operating Temperature: -20° C to +85° C

3. Material/Finish:
- Shell, coupling nut, jam-nut: aluminum alloy or CRES
- Seal/O-ring: fluorosilicone
- Hardware: stainless steel

USB Type C
- Housing: thermoplastic
- Shell: copper alloy/nickel plated
- Terminal: copper alloy/gold plated

© 2016 Glenair, Inc • 1211 Air Way, Glendale, CA 91201 • 818-247-6000 • www.glenair.com • U.S. CAGE code 06324 • SuperSeal™ Catalog
Dimensions in Inches (millimeters) are subject to change without notice.

SHELL STYLE 00 JAM NUT RECEPTACLE FOR FRONT PANEL MOUNTING

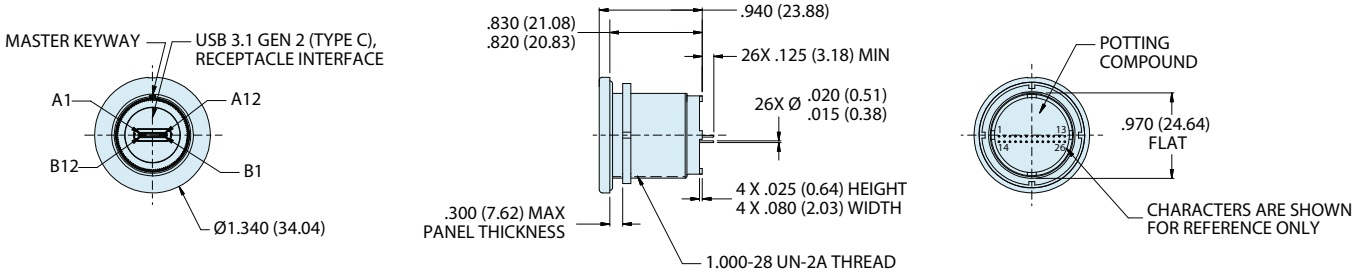

SHELL STYLE 07 JAM NUT RECEPTACLE FOR REAR PANEL MOUNTING

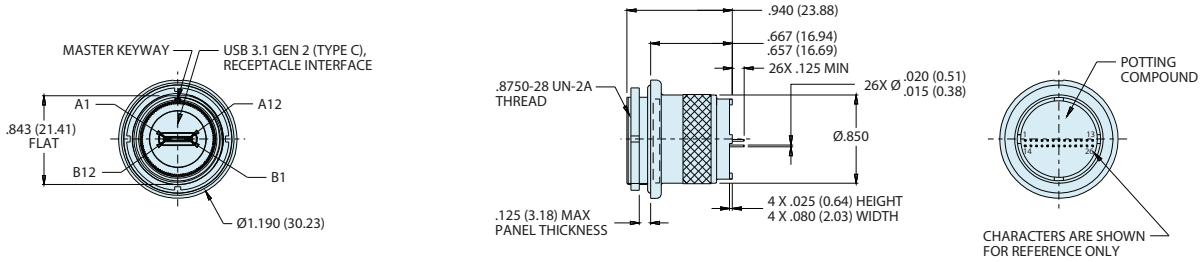

© 2016 Glenair, Inc • 1211 Air Way, Glendale, CA 91201 • 818-247-6000 • www.glenair.com • U.S. CAGE code 06324 • SuperSeal™ Catalog
Dimensions in Inches (millimeters) are subject to change without notice.

804-388 USB 3.2 Type C Plug

How To Order						
Sample Part Number		**804-388**	**NF**	**07**	**-12**	**A**
Series	**804-388** = USB 3.2 Type C Plug					
Material and Finish[1]	**NF** = Aluminum/Cadmium, Olive Drab **ME** = Aluminum/Electroless Nickel **MT** = Aluminum/Nickel PTFE **ZNU** = Aluminum/Black Zinc Nickel					
Connector Style[1]	**06** = Plug					
Shell Size	**12** = Shell Size 12					
Aternate Key Positions[1]	**A**, **B**, **C**, **D**, **E**, **F** Omit character for single key (non-polarized)					

USB 3.2 TYPE C PLUG

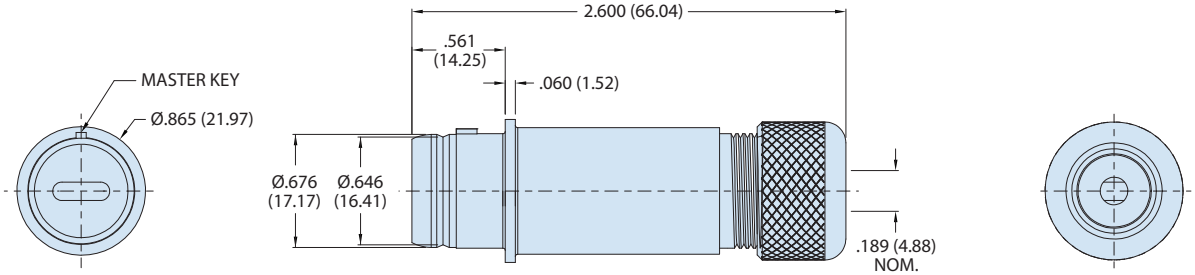

KEYWAY POSITIONS

Alternate Key and Keyway Positions		
Position	**A°**	**B°**
A	150°	210°
B	75°	210°
C	95°	230°
D	140°	275°
E	75°	275°
F	95°	210°

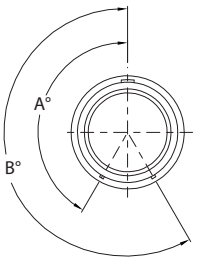

RECOMMENDED USB 3.2 TYPE C PLUG DESIGN

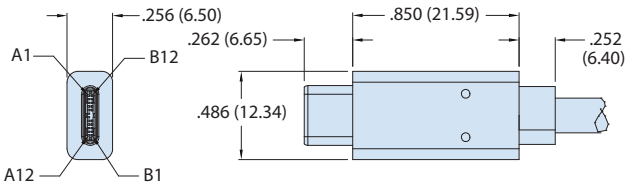

NOTES

1. 1. Interpret drawing per ASME Y14.5 - 2009.
2. Material/finishes:
   - Barrel: AL alloy or CRES / see Mighty Mouse Series 80 catalog
   - Seals: silicone based elastomer
   - Hardware: stainless steel
3. USB 3.2 Type C:
   - Electrical: current rating: 3.0 Amp max
   - D.W.V.: 100 VAC
   - I.R.: 100 Megohms min.
   - Operating temperature range: -20°C to +85°C
4. Plug connector designed to meet IP68 mated condition.
5. USB design meets USB 3.2 Type C benchmark data transfer rate requirements for read and write.

© 2016 Glenair, Inc • 1211 Air Way, Glendale, CA 91201 • 818-247-6000 • www.glenair.com • U.S. CAGE code 06324 • SuperSeal™ Catalog
Dimensions in Inches (millimeters) are subject to change without notice.

TOOLS AND ACCESSORIES

SUPERSEAL™

Tools and Accessories for the SuperSeal™ family of connectors





Nobody can grasp the ins-and-outs of interconnect tool design and manufacturing without a full understanding of cable harness assembly. At Glenair, we not only manufacture the connectors, backshells, cables and enclosures which go into creating interconnect cable harnesses, we run a top-flight cable assembly service of our own. We've drawn on this extensive experience to design and build a complete family of specialized backshell assembly tools for most Mil-Standard circular connectors, as well as connector wrenches, universal connector holding tools and braid termination tools for production use and field maintenance.







Glenair, Inc.
1211 Air Way
Glendale, CA 91201-2497
818-247-6000
sales@glenair.com
www.glenair.com

RJ45/USB SUPER SEAL™

RJ45 AND USB 2.0

Contacts, Tools, and Accessories

Product Selection Guide

Glenair®



Contacts and Termination Tools

Tools, Contacts and Contact Installation Instructions — Page M-2
Band-Master ATS Manual Banding Tools — Page M-6



MIL-DTL-38999 Type Accessories

Backshells and Recommended Shrink Boots — Page M-8
Covers — Page M-11

Series ITS (5015 Intermountable) Accessories

Covers — Page M-14

For backshells and Recommended Shrink Boots
see ITS300H for RJ45 or ITS340H for USB Applications



Series IPT MIL-DTL-26482 Type Accessories

Covers — Page M-15

For backshells and Recommended Shrink Boots
see IPT300H for RJ45 or IPT340H for USB applications

MIL-DTL-28840 Type Accessories

Backshells — Page M-16
Covers — Page M-18



Series 80 Mighty Mouse Accessories

Backshells and Recommended Shrink Boots — Page M-19
Covers — Page M-22

M

© 2016 Glenair, Inc • 1211 Air Way, Glendale, CA 91201 • 818-247-6000 • www.glenair.com • U.S. CAGE code 06324 • SuperSeal™ Catalog
Dimensions in Inches (millimeters) are subject to change without notice.

MIL-DTL-38999 Series III Type Connectors

637-235 Environmental feedthrough backshell for RJ45 Series connectors



Part Number Development					
Sample Part Number	**637-235**	**M**	**17**	**-**	**1**
Basic Number	**637-235** Environmental Feedthrough Backshell for RJ45 Series Connectors				
Finish	See Material and Finish table				
Shell Size	See Table I				
Cable Range	- = Standard Cable Ø .312/.187 **A** = Cable Ø .400/.256 **B** = Cable Ø .462/.400				
Length Indicator	See Table III (Omit For Standard Length)				

B

NOTES

1. Glenair 600 series backshell assembly tools are recommended for assembly and installation.
2. Material/finish:
   - Adapter, coupling nut, compression ring, split washer and nut: see Table I
   - O-ring and grommet: fluorosilicone
   - Anti-decoupling device - corrosion resistant material/na

Material and Finish[1]	
M	Aluminum/Electroless Nickel
NF	Aluminum/Cadmium, Olive Drab, over Electroless Nickel
ZN	Aluminum/ Zinc NI, Olive Drab
ZE	
ZR	Aluminum/Black Zinc-Nickel
MT	Aluminum/Nickel PTFE
P2	Aluminum/Nickel Plate Per AMS-QQ-N-290
XM	Composite/Electroless Nickel
XMT	Composite/Nickel-PTFE
XO	Composite/No Finish
XW	Composite/Cadmium, Olive Drab, Over Electroless Nickel
Z1	Stainless Steel/Passivate
ZC	Stainless Steel/Zinc Cobalt
ZL	Stainless Steel/ Electro-Deposited Nickel
ZW	Stainless Steel/Cad Olive Drab Over Nickel
AB	Bronze/None (Clean Only)

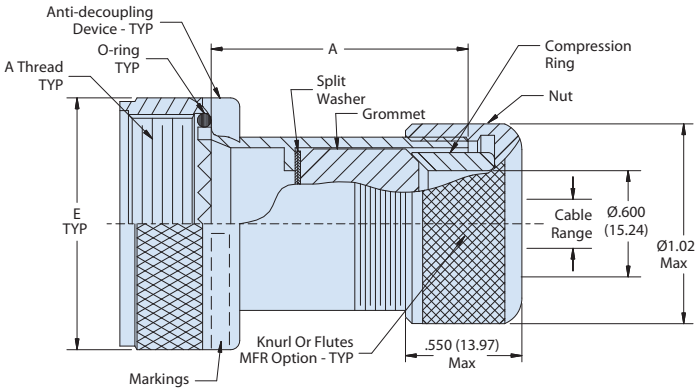

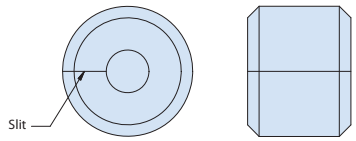

Slit Grommet

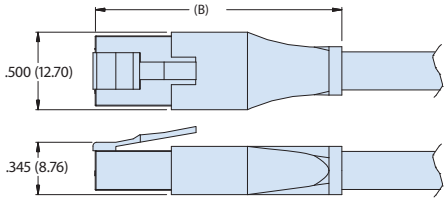

RJ45 Connector
(For reference only)

Table I			
Shell Size	**A Thread**	**E Max**	
		in	**mm**
17	M25 X 1.0-6H	1.42	36.1
19	M28 X 1.0-6H	1.54	39.1

Table III				
Shell Size	**A**		**B REF**	
	in	**mm**	**in**	**mm**
1	0.75	19.05	0.62	15.75
2	1.00	25.40	0.87	22.10
3	1.25	31.75	1.12	28.45
4	1.50	38.10	1.37	34.80
Standard Length	1.74	44.20	1.62	41.15

© 2016 Glenair, Inc • 1211 Air Way, Glendale, CA 91201 • 818-247-6000 • www.glenair.com • U.S. CAGE code 06324 • SuperSeal™ Catalog
Dimensions in Inches (millimeters) are subject to change without notice.

Pin and Socket Contacts for SuperSeal™ 38999 Type, Series ITS and Series IPT Connectors

SIZE #22 STANDARD DUTY ELECTRICAL PIN AND SOCKET CONTACTS FOR USE WITH SUPERSEAL™ 38999 TYPE, ITS 301, ITS 345, IPT 301 AND IPT 345 SERIES CONNECTORS

	Mating End Size	Wire Accomodation	Military Part Number	Glenair Part Number
Pin	22	22-28 AWG	M39029/58-360	850-002-22-360
Socket	22	22-28 AWG	M39029/56-348	850-001-22-348



Pin Contact

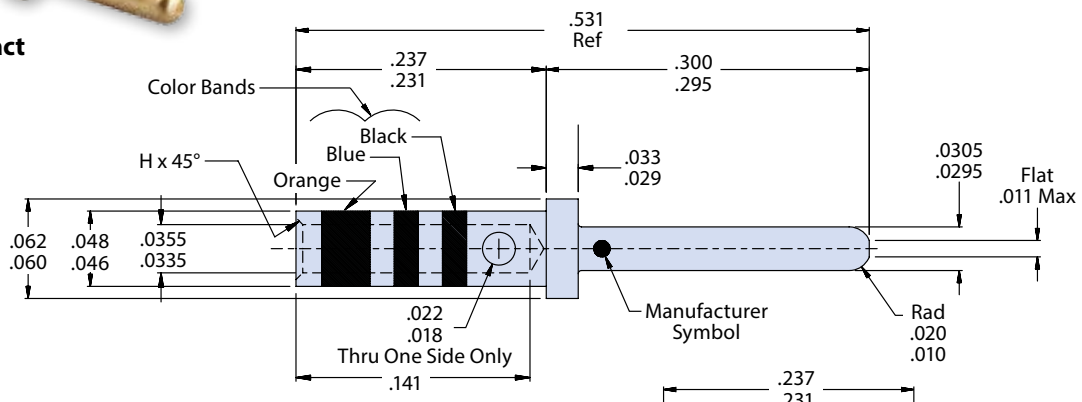

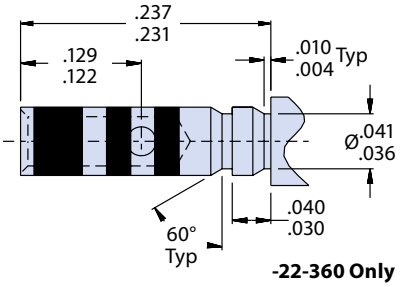

-22-360 Only



Socket Contact

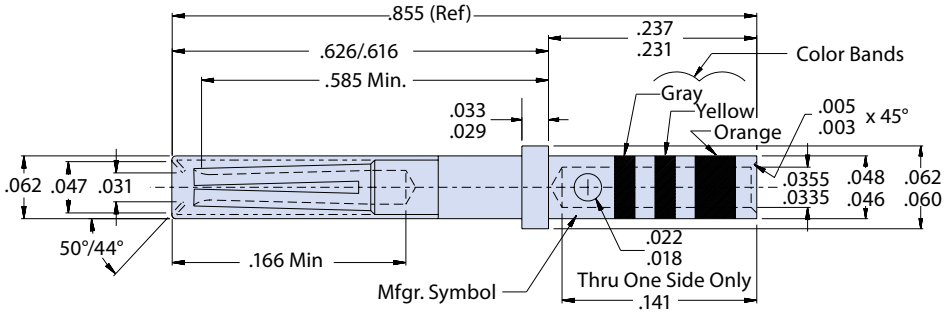

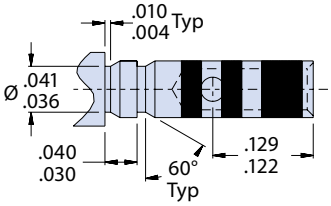

-22-348 Only

Termination Tools							
Size 22	Part Number	Military Number	AWG Handling	Crimp Tool	Positioner	Insertion Tool	Extraction Tool
Pin	850-002-22-360	M39029/58-360	22, 24, 26, 28	M22520/2-01 M22520/7-01	M22520/2-09 M22520//7-07	M81969/14-01 M81969/8-01	M81969/14-01 M81969/8-02
Socket	850-001-22-348	M39029/56-348	22, 24, 26, 28	M22520/2-01 M22520/7-01	M22520/2-07 M22520//7-05	M81969/14-01 M81969/8-01	M81969/14-01 M81969/8-02

© 2016 Glenair, Inc • 1211 Air Way, Glendale, CA 91201 • 818-247-6000 • www.glenair.com • U.S. CAGE code 06324 • SuperSeal™ Catalog
Dimensions in Inches (millimeters) are subject to change without notice.

HOW TO TERMINATE, INSTALL AND REMOVE SIZE #22 CONTACTS

1 ***Set Up Series M22520 Crimp Tool.*** See pin and socket contact selection guide for correct tools based on contact part numbers and tool codes. Install proper positioner into crimp tool. The label on the positioner shows the proper tool setting for each wire size. Turn the adjustment wheel to the correct setting.

2 ***Strip Wire.*** Remove wire insulation, taking care to avoid nicking or cutting wire strands. Strip wire to length shown. Holding wire by insulation, twist strands together to form a neat bundle.

3 ***Insert wire*** into contact. The wire should be visible in the inspection hole.

4 Insert wire and contact into crimp tool as shown. Make sure that the contact is fully inserted into the tool. Squeeze handle completely. The ratchet mechanism will not allow a partial crimp. Release handle and remove contact.

5 ***Inspect crimped contact.*** Wire should be fully inserted and the crimp should be uniform in appearance.

6 ***Install contact into connector.*** Slide green end of insertion/extraction tool over wire insulation and slide the tool forward until it bottoms against the contact shoulder. Insert tool/contact/wire into contact cavity, being careful to avoid damage by properly aligning the contact with the cavity. Push forward until contact retention clip snaps into position. Remove tool. Gently pull on wire to confirm contact retention. Fill unused contact cavities with uncrimped contacts followed by the proper MS27488 sealing plug.

Contact Size	Seal Plug
22, 22M, 22D	MS27488-22

7 ***Contact Extraction.*** Use the white end of appropriate insertion/extraction tool. First, push the wire into the groove of the extraction tool's tip. Slide the tip of the tool over the jacketed wire into the connector cavity. Push the tool until the tip bottoms in the connector. A straight push is best. Avoid wiggling or rocking the tip, as this may damage the cavity. Pinch the wire between your thumb and the white plastic grip and slide the tool and contact out of the connector.

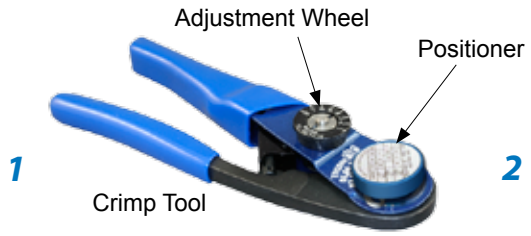

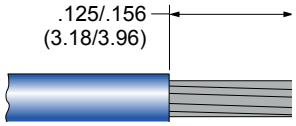

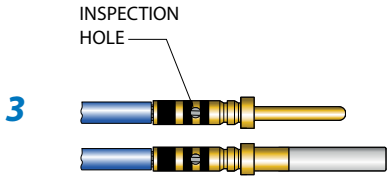



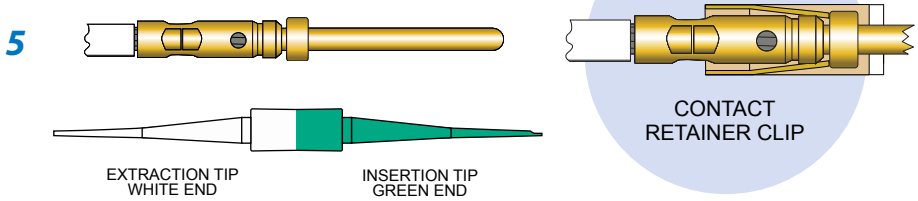

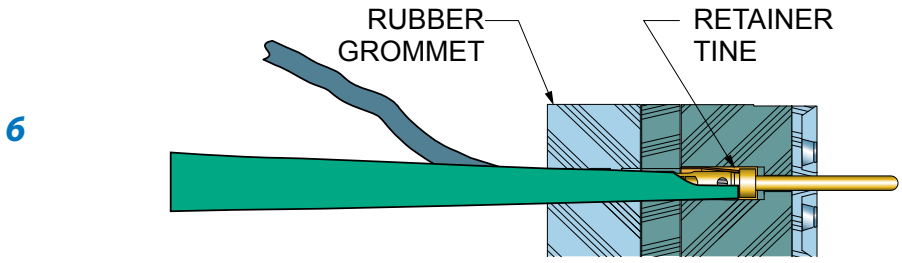

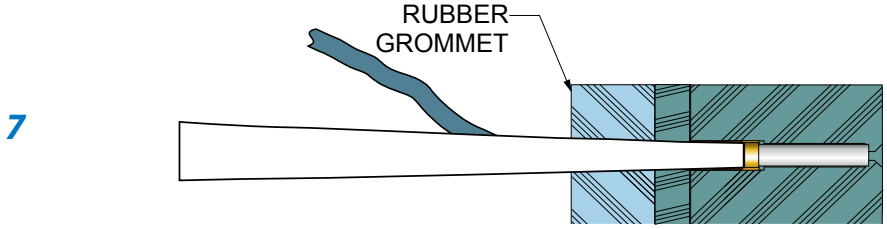

© 2016 Glenair, Inc • 1211 Air Way, Glendale, CA 91201 • 818-247-6000 • www.glenair.com • U.S. CAGE code 06324 • SuperSeal™ Catalog
Dimensions in Inches (millimeters) are subject to change without notice.

Size #23 Crimp Contact for Mighty Mouse Series 801, 804, and 805 Micro and Standard USB Connectors

SIZE #23 CRIMP CONTACTS FOR USE WITH 801-084, 801-085, 801-341, 804-084, 804-085, 804-341 805-084, 805-085 AND 805-341 SERIES 80 MIGHTY MOUSE CONNECTORS

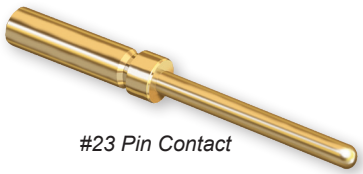

#23 Pin Contact

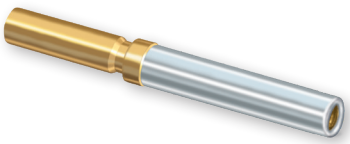

#23 Socket Contact

Standard size #23 contacts accept #22 to #28 AWG wire. Choose "small bore" versions for #26 to #30 AWG wire. For thermocouple applications, specify alumel or chromel contacts. Contacts are bulk packaged. Terminate with standard M22520 crimper with special positioner.

Contact Type	Wire Size	Material	Part Number	Ø A		Color Band	Tool Code
				In.	mm.		
Pin	#22 – #28	BeCu	809-001	.035 Max	.902	None	A, C
Socket	#22 – #28	BeCu	809-002	.035 Max	.902	None	A, C

PIN (809-001)

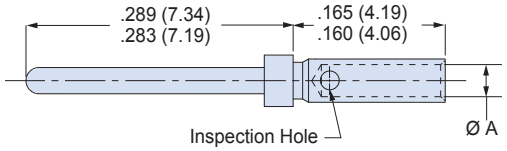

Socket (809-002)

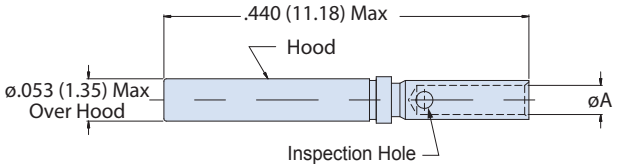

Crimp Tensile Strength		
Values are in pounds and are minimums.		
Wire Gage	Silver or Tin Coated Copper Wire	Nickel Coated Copper Wire
#22	12	8
#24	8	6
#26	5	3
#28	3	2

Material and Finish

Beryllium copper alloy per ASTM B196 or B197, 50 microinches gold plated per ASTM B 488 over nickel underplate. Crimp area may have less plating.
Thermocouple contacts: alumel or chromel alloy, unplated, per ANSI 96.1
Socket contact hood: stainless steel, passivated per AMS-QQ-P-35.

Specifications

Current Rating: 5 Amps maximum
Voltage Drop (at 5 Amps and 25° C): 70 millivolts maximum
Temperature Range: -65° to + 200° C

MINIATURE ADJUSTABLE CRIMP TOOL AND POSITIONER



Standard M22520/2-01 crimper for use with standard size #23 Mighty Mouse contacts. Performs precision eight-indent crimps for gas-tight wire terminations and excellent tensile strength. Adjustment wheel has 8 settings. Ratchet mechanism prevents improper crimps. Length is 6.75 inches, weight is approx. 10 oz. Bayonet-type positioner 809-005 hold contacts at correct height for crimping. Check calibration with M22520/3 gages.

Tool	Part Number	Military Part Number	Daniels Part Number	Tool Code
Crimp Tool	809-015	M22520/2-01	AFM8	A
Positioner	809-005	(none)	K1461	C

© 2016 Glenair, Inc • 1211 Air Way, Glendale, CA 91201 • 818-247-6000 • www.glenair.com • U.S. CAGE code 06324 • SuperSeal™ Catalog
Dimensions in Inches (millimeters) are subject to change without notice.

Size #23 Crimp Contact Instructions for Mighty Mouse Series 801 Micro and Standard USB Connectors

HOW TO TERMINATE, INSTALL AND REMOVE SIZE #23 CONTACTS

1 ***Set Up Crimp Tool.*** Install proper positioner into crimp tool. The label on the positioner shows the proper tool setting for each wire size. Turn the adjustment wheel to the correct setting.

2 ***Strip Wire.*** Remove wire insulation, taking care to avoid nicking or cutting wire strands. Strip wire to length shown.

3 ***Insert wire*** into contact. The wire should be visible in the inspection hole.

4 Insert contact into crimp tool as shown. Make sure that the contact is fully inserted into the tool. Squeeze handle completely. The ratchet mechanism will not allow a partial crimp. Release handle and remove contact.

5 ***Inspect crimped contact.*** Wire should be fully inserted and the crimp should be uniform in appearance.

Insertion/Extraction Tool 809-088

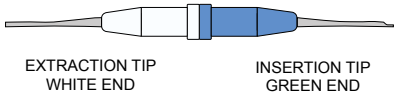

6 ***Install contact into connector.*** Push the contact through the rear grommet until the contact locks into place. This can usually be done by hand without the need for a tool. If the wire gage is #26 or smaller, a tool is helpful. There are two techniques for installing contacts with a tool. One method is to push the contact in by hand, then use the tool to finish the insertion. The other method is to position the insertion tip against the contact shoulder, then insert the contact. Use insertion/extraction tool 809-088 to install contacts. Slide the wire into the groove on the blue end of the tool. Slide the tool tip up the contact until it touches the contact shoulder. **USE CARE TO AVOID DAMAGING THE CONNECTOR.**

7 ***Contact Extraction.*** Use tool 809-088. The white end is used for contact extraction. First, push the wire into the groove of the metal tip. Slide the tip of the tool into the connector. Push the tool into the connector cavity until the tip bottoms in the connector. Avoid wiggling or rocking the tip. This may damage the cavity. A straight push is best. Pinch the wire between your finger and the white plastic grip and slide the tool and contact out of the connector. **Wire insulation diameter greater than 0.045 inches (1.14mm) is too large to work properly with the extraction tool. connector damage is possible.**

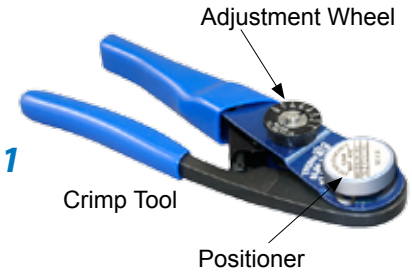

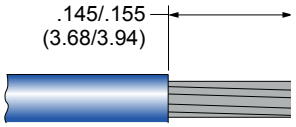

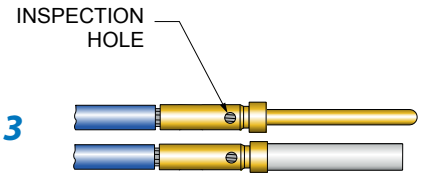



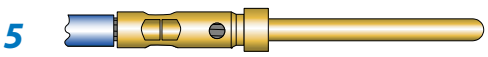

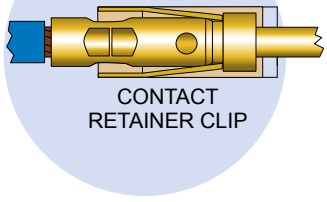

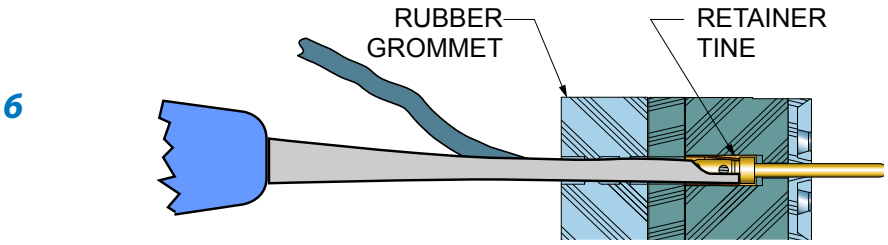

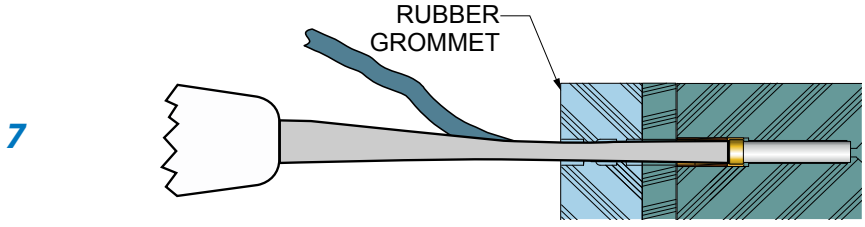

© 2016 Glenair, Inc • 1211 Air Way, Glendale, CA 91201 • 818-247-6000 • www.glenair.com • U.S. CAGE code 06324 • SuperSeal™ Catalog
Dimensions in Inches (millimeters) are subject to change without notice.

Band-Master ATS® 601-100 Commercial and 600-058 QPL Qualified, Standard Banding Tool

STANDARD BANDING TOOL



The 601-100 Band-Master ATS® Standard Tool with Counter for Standard Bands

Weighs 1.2 lbs., and is designed for .240" width clamping bands in a tension range from 100 to 180 lbs. Calibrate at 150 lbs. ± 5 lbs. for most shield terminations. Tool and band should never be lubricated.

The 600-058 QPL Qualified (M81306/1A) Standard Banding Tool without Counter

Weighs 1.1 and is designed for .240" width clamping bands in a tension range from 100 to 180 lbs. Calibrate at 150 lbs. ± 5 lbs. for most shield terminations. Tool and band should never be lubricated (not shown).

Color-coded tool handle:

= Standard; Black

	Band-Master ATS® Standard Band Selection					
	Length		Part Number		Fits Diameter	
Bands	In.	mm.	Flat	Pre-Coiled	In.	mm.
Short Standard	9.0	228.6	601-005	601-006	1.0	25.4
Medium Standard	14.25	361.95	601-040	601-041	1.8	45.7
Long Standard	18.0	457.2	601-049	601-050	2.5	63.5

Cable Pull Strength for BandMaster™ ATS Standard Bands							
		Band Width		Band Thickness		Calibration Setting	Cable Pull Strength
Name	Material Type	In	mm	In	mm		
Standard	300 SS	0.240	6.10	.020	.51	150 ±5 lbs	per AS85049/128

	QPL Qualified Standard Band Selection					
	Length		Mil Spec Part Number		Fits Diameter	
Bands	in.	mm.	Flat	Pre-Coiled	in.	mm.
Standard Band	14.25	361.95	M85049/128-3	M85049/128-4	1.8	45.7

Cable Pull Strength for Standard QPL Qualified Bands							
		Band Width		Band Thickness		Calibration Setting	Cable Pull Strength
Name	Material Type	In	mm	In	mm		
Standard	300 SS	0.240	6.10	.020	.51	150 ±5 lbs	per AS85049/128

© 2016 Glenair, Inc • 1211 Air Way, Glendale, CA 91201 • 818-247-6000 • www.glenair.com • U.S. CAGE code 06324 • SuperSeal™ Catalog
Dimensions in Inches (millimeters) are subject to change without notice.

Band-Master ATS® 601-101 Commercial and 600-061 QPL Qualified, Micro Banding Tool

MICRO BANDING TOOL



Color-coded tool handle:

= Micro; Blue

The 601-101 Band-Master ATS® Micro Tool with Counter for Micro Bands

Weighs 1.3 lbs., and is designed for micro .120" width clamping bands in a tension range from 50 to 85 lbs. Calibrate at 80 lbs ±3 lbs. for most shield terminations. Tool and band should never be lubricated.

The 600-061 QPL Qualified (M81306/1B) Micro Banding Tool without Counter

Weighs 1.1 and is designed for micro .120" width clamping bands in a tension range from 60 to 85 lbs. Calibrate at 80 lbs ±5 lbs. for most shield terminations. Tool and band should never be lubricated (not shown).

	Band-Master ATS® Micro Band Selection					
	Length		Part Number		Fits Diameter	
Bands	in.	mm.	Flat	Pre-Coiled	in.	mm.
Short Micro	5.0	127.0	601-024	601-025	0.5	12.7
Medium Micro	8.125	206.38	601-060	601-061	.88	22.4
Long Micro	14.25	361.95	601-064	601-065	1.8	45.7

Cable Pull Strength for Band-Master ATS® Micro Bands							
		Band Width		Band Thickness		Calibration Setting	Cable Pull Strength
Name	Material Type	In	mm	In	mm		
Micro	300 SS	0.120	3.05	.015	.38	80 ±5 lbs	per AS85049/128

	QPL Qualified Micro Band Selection					
	Length		Part Number		Fits Diameter	
Bands	in.	mm.	Flat	Pre-Coiled	in.	mm.
Standard Micro	8.125	206.38	M85049/128-7	M85049/128-8	.88	22.4

Cable Pull Strength for Micro QPL Qualified Bands							
		Band Width		Band Thickness		Calibration Setting	Cable Pull Strength
Name	Material Type	In	mm	In	mm		
Micro	300 SS	0.120	3.05	.015	.38	80 ±5 lbs	per AS85049/128

© 2016 Glenair, Inc • 1211 Air Way, Glendale, CA 91201 • 818-247-6000 • www.glenair.com • U.S. CAGE code 06324 • SuperSeal™ Catalog
Dimensions in Inches (millimeters) are subject to change without notice.

637-204 Environmental Backshell with Sealing Gland for 253-100 RJ45 38999 Series III Type Connectors



How To Order			
Sample Part Number		**637-204**	**M**
Series	**637-204**		
Material and Finish	See Material and Finish Table		

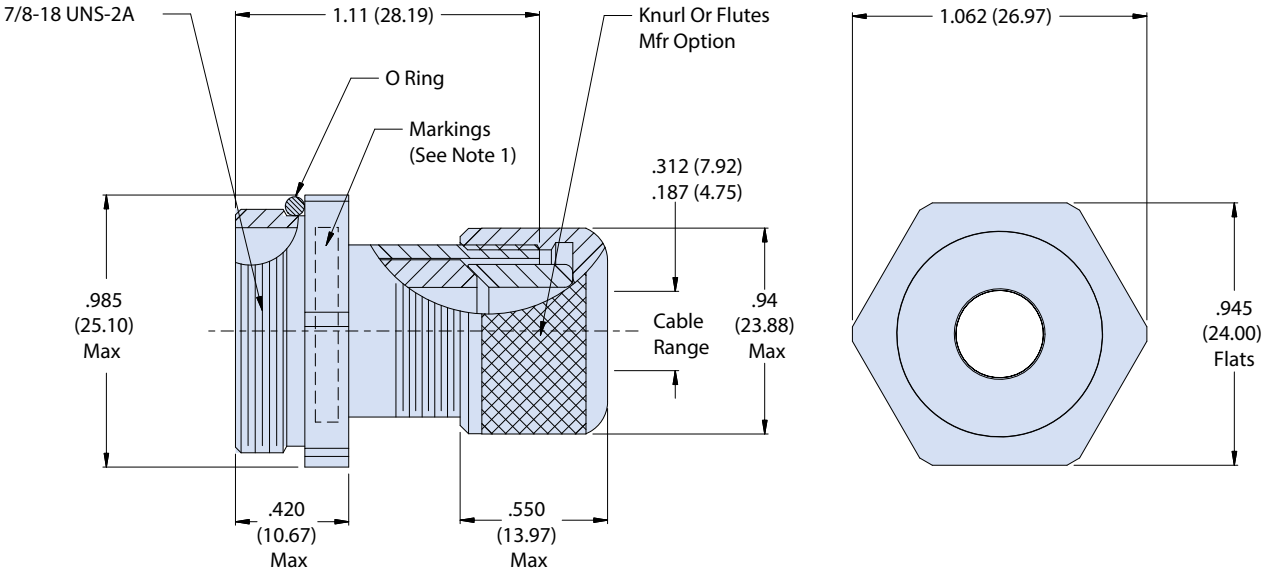

Materials and Finishes	
NF	Aluminum/Cadmium, olive drab
ME	Aluminum/Electroless nickel
MT	Aluminum/ Nickel PTFE
ZR	Aluminum/ Black zinc-nickel

NOTES

1. Glenair 600 series backshell assembly tools are recommended for assembly and installation
2. O-ring and grommet: fluorosilicone

© 2016 Glenair, Inc • 1211 Air Way, Glendale, CA 91201 • 818-247-6000 • www.glenair.com • U.S. CAGE code 06324 • SuperSeal™ Catalog
Dimensions in Inches (millimeters) are subject to change without notice.

310-001 Shrink Boot Adapter with Rotatable Coupling for 38999 Series III Type Connectors



How To Order						
Sample Part Number	**310**	**H**	**S**	**001**	**M**	**17**
Series/Basic Part No.	**310** - Shrink Boot Adapter					
Connector Designator	**H** = 38999					
Angular Function	**A** = 90° **B** = 45° **S** = Straight					
Basic Part No.	**001**					
Finish	See Material and Finish Table					
Shell Size	**15**, **17**, **19**					

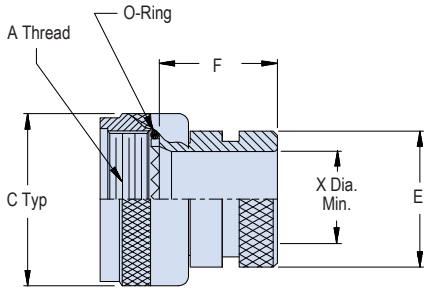

Straight (S)

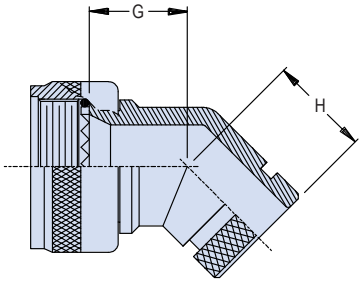

45° (B)

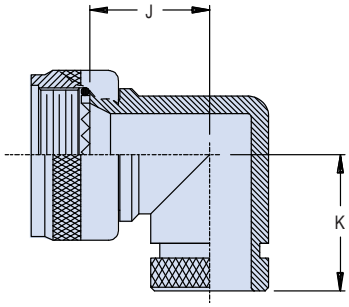

90° (A)

Dimensions									
Shell Size	A Thread	C Typ	E Max	F Max	G Max	H Max	J Max	K Max	X Dia. Min.
15	M22 X 1 -- 6H	1.07 (27.2)	.838 (21.3)	.940 (23.9)	.705 (17.9)	.890 (22.6)	.920 (23.4)	1.110 (28.2)	.565 (14.4)
17	M25 X 1 -- 6H	1.21 (30.7)	.963 (24.5)	.940 (23.9)	.732 (18.6)	.910 (23.1)	.980 (24.9)	1.170 (29.7)	.690 (17.5)
19	M28 X 1 -- 6H	1.36 (34.5)	1.042 (26.5)	.940 (23.9)	.748 (19.0)	.920 (23.4)	1.020 (25.9)	1.190 (30.2)	.769 (19.5)

Materials and Finishes		
NF	Aluminum	Cadmium, olive drab
ME		Electroless nickel
MT		Nickel PTFE
ZR		Black zinc-nickel

Recommnded Shrink Boot*		
Shell Size	Shrink Boot with Low Temp Adhesive	Shrink Boot without Low Temp Adhesive
15	**770-028S904** Lipless boot	**770-028S904U** Lipless boot
17	**770-028S906**	**770-028S906U**
19	**770-028S906**	**770-028S906U**

*** Shrink Boot MUST be ordered seperately.**
Shrink boot material: compound 2013 low temperature polyolefin.

© 2016 Glenair, Inc • 1211 Air Way, Glendale, CA 91201 • 818-247-6000 • www.glenair.com • U.S. CAGE code 06324 • SuperSeal™ Catalog
Dimensions in Inches (millimeters) are subject to change without notice.

370-001 Cable Sealing Backshell with Rotatable Coupling for 38999 Series III Type Connectors

How To Order									
Sample Part Number	**370**	**H**	**S**	**001**	**M**	**17**	**03**	**D**	**1.5**

Series/Basic Part No.	**370** - low Profile
Connector Designator	**H** = 38999
Angular Function	**A** = 90° **B** = 45° **S** = Straight
Basic Part No.	**001**
Finish	See Material and Finish Table
Shell Size	**15**, **17**, **19**
Dash No.	See Dash Number Table
Strain Relief Style	**D** = Nut
Length	1/2 inch increments (e.g. 6 = 3 inches); Straight only Minimum Order Length 1.5 Inch (See Note 1)

Straight (S)

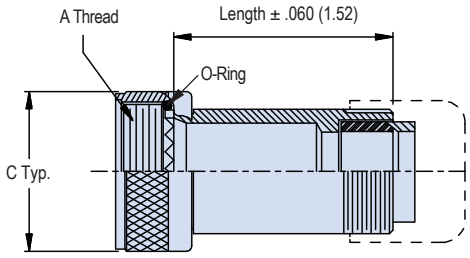

45° (B)

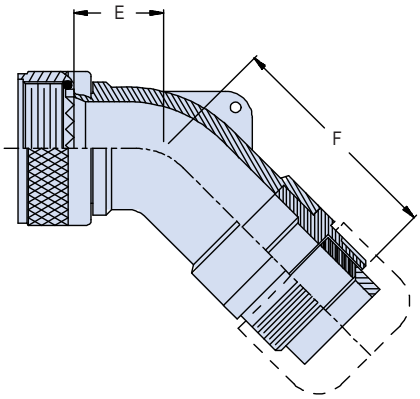

90° (A)

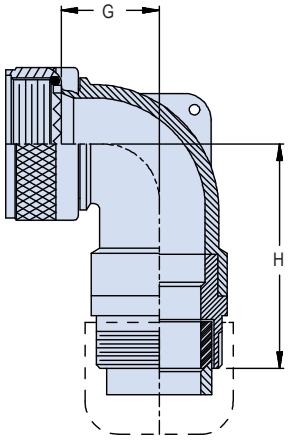

STRAIN RELIEF STYLE D

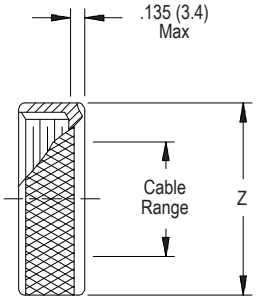

Dimensions						
Shell Size	A Thread	C Typ.	E Max	F Max	G Max	H Max
15	M22 X 1 -- 6H	1.07 (27.2)	.645 (16.4)	2.359 (59.9)	.700 (17.8)	2.369 (60.2)
17	M25 X 1 -- 6H	1.21 (30.7)	.738 (18.7)	2.469 (62.7)	.885 (22.5)	2.459 (62.5)
19	M28 X 1 -- 6H	1.36 (34.5)	.926 (23.5)	2.659 (67.5)	.975 (24.8)	2.629 (66.8)

Materials and Finishes[1]	
NF	Aluminum/Cadmium, olive drab
ME	Aluminum/Electroless nickel
MT	Aluminum/ Nickel PTFE
ZR	Aluminum/ Black zinc-nickel

Dash Number			
Dash No.	Z Max	Cable Range Min	Cable Range Max
03	.630 (16.0)	.156 (4.0)	.250 (6.4)
04	.755 (19.2)	.188 (4.8)	.312 (7.9)
06	.942 (23.9)	.281 (7.1)	.438 (11.1)

© 2016 Glenair, Inc • 1211 Air Way, Glendale, CA 91201 • 818-247-6000 • www.glenair.com • U.S. CAGE code 06324 • SuperSeal™ Catalog
Dimensions in Inches (millimeters) are subject to change without notice.

660-024 and -023 Protective Covers, Attached to Panel for 38999 Type Receptacle Connectors

How To Order							
Sample Part Number	**660**	**-024**	**M**	**17**	**H**	**5**	**-01**
Series	**660** = Series 66						
Cover Type	**-024** = metal receptacle cover **-023** = metal plug cover						
Material and Finish	See Material and Finish Table						
Shell Size	**15, 17, 19**						
Lanyard Type	**D, S, F, G, H, K, R, T, U** (See Lanyard Type Table)						
Lanyard Length	Length in inches						
Ring Style Dash No.	(See Table I and II) omit for "SK" slip knot attachment						

Table I: Dash No. for Small Ring

Dash No.	P	Dash No.	P
01	.140 (3.6)	06	.125 (3.2)
02	.182 (4.6)	07	.218 (5.5)
03	.191 (4.9)	09	.156 (4.0)
04	.197 (5.0)	00	no eyelet
05	.167 (4.2)	WS	with strap

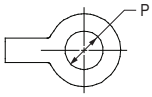

For attachment to panel

Table II: Dash No. for Solid Ring

Dash No.	Shell Size	N
19	15	1.141 (29.0)
21	17	1.266 (32.2)
23	19	1.391 (35.3)

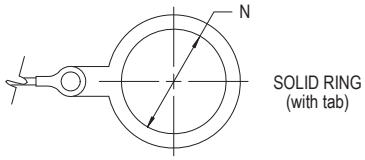

For attachment behind jam nut

Dimensions

Shell Size	A Thread 0.1P-0.3L-TS	F	ØG Max
15	1.0000	1.300 (33.0)	1.260 (32.0)
17	1.1875	1.457 (37.0)	1.457 (37.0)
19	1.2500	1.575 (40.0)	1.535 (39.0)

Lanyard Type	
Sym	Attachment
D	Bead chain, cres, passivated, with terminal
E	Link chain, cres, passivated, with clevis terminal
F	Wire rope, nylon jacket w/terminal
G	Nylon rope
H	Wire rope, fluoropolymer jacket with terminal
K	Nylon rope (olive drab color)
N	Attachment omited
R	Wire rope, pvc jacket w/terminal
T	Wire rope, no jacket, w/terminal
S	#8 Sash chain, cres, passivate
U	Wire rope, polyurethane jacket with terminal
SK	Nylon rope (black) with slip knot

Lanyard Types

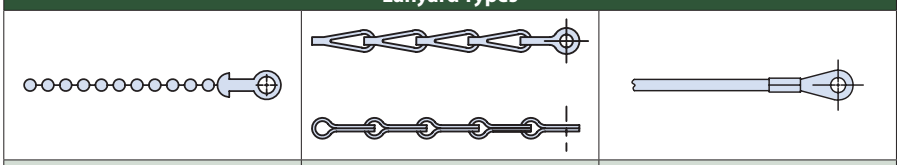

Bead Chain (Type D)	Sash Chain (Type S)	Rope (Types F, G, H, K, R, T, U)

660-023 Plug Cover

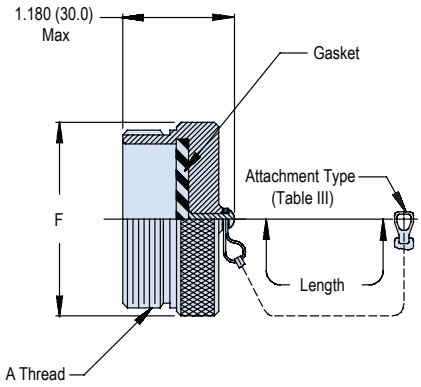

660-024 Receptacle Cover

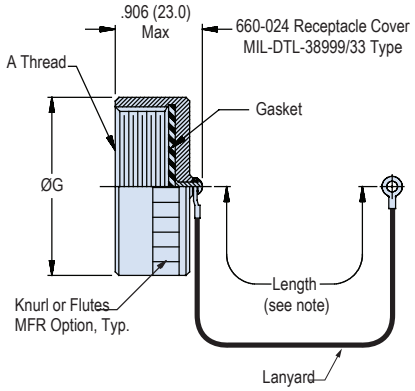

NOTES

1. Length tolerance for Sash Chain (S) is ± 1 link, for all other attachments ± .25.
2. For plug covers contact factory
3. Material and Finish
   - Gasket: Silicone
   - Hardware, Rivet: Stainless Steel/ Passivate

Materials and Finishes[1]	
NF	Aluminum/Cadmium, olive drab
ME	Aluminum/Electroless nickel
MT	Aluminum/ Nickel PTFE
ZR	Aluminum/ Black zinc-nickel
Z1	Stainless Steel/ Passivate

© 2016 Glenair, Inc • 1211 Air Way, Glendale, CA 91201 • 818-247-6000 • www.glenair.com • U.S. CAGE code 06324 • SuperSeal™ Catalog • Rev. 11.11.20

Dimensions in Inches (millimeters) are subject to change without notice.

667-407 ProSeal™ Spring-Loaded Environmental Cover for 38999 Sr. III Type Wall Mount or Jam Nut Connectors

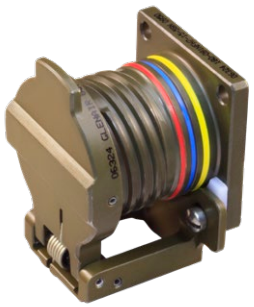

How To Order							
Sample Part Number	**667-407**	**NF**	**17**	**T1**	**J**	**-59**
Product Series-Basic No.	**667-407** = Flop Cover					
Material and Finish	See Material and Finish Table					
Connector Shell Size	See Dimensions Table					
Panel Thickness	See Panel Thickness Table					
Mounting Type	**J** = Jam Nut Mount Receptacle **W** = Wall Mount Receptacle					
Conductive Silicone	**59**					

Dimensions																
Shell Size	A Dim ±.031 (.78)		B Dim		C Dim		D Dim ±.008 (.20)		E Dia ±.031 (.78)		F Dim Max		H Dim Max		J Dia Max	
	In	mm	In	mm	In	mm	In	mm	In	mm	In	mm	In	mm	In	mm
15	1.220	30.98	.969	24.61	.485	12.31	.129	3.28	1.560	39.62	1.029	26.14	1.179	29.95	1.255	31.88
17	1.311	33.30	1.062	26.97	.531	13.49	.129	3.28	1.625	41.28	1.114	28.30	1.212	30.78	1.425	36.20
19	1.437	36.50	1.156	29.36	.578	14.68	.129	3.28	1.750	44.45	1.146	29.11	1.365	34.67	1.488	37.80

Material and Finish		
Symbol	Material	Finish Descrition
MT	Aluminum	Nickel-PTFE
ZR		Zinc ni, black (tri-valet cr)
M		eletroless nickel
NF		cadmium plate/olive drab over eletroless nickel
Z1	SST	passivate
XB	Composite	color black

Panel Thickness Table							
Dash No.	Panel Thickness ±.030		Shell Size	G ±.06 (1.52)			
				Jam Nut Style		Wall Style	
	In	mm		In	mm	In	mm
T1	.062	1.57	09-19	1.041	26.44	0.977	24.82
			21-25	1.126	28.60	1.032	26.21
T2	.125	3.18	09-19	0.979	24.87	0.915	23.24
			21-25	1.064	27.03	0.970	24.64

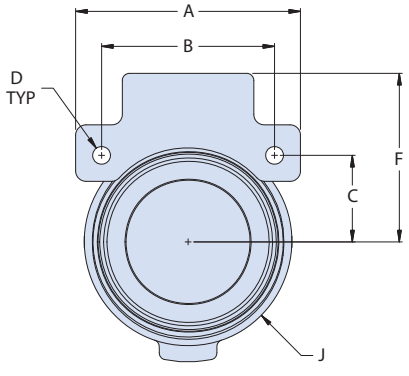

WALL MOUNT

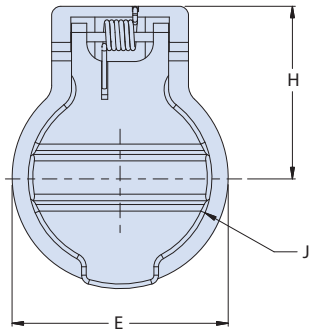

JAM NUT

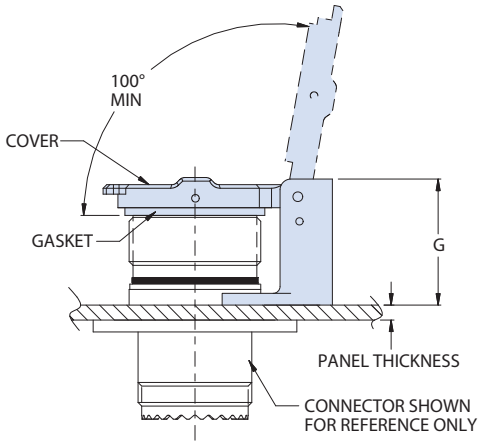

NOTES

- Cover will stay open at 100° from receptacle face

 © 2016 Glenair, Inc • 1211 Air Way, Glendale, CA 91201 • 818-247-6000 • www.glenair.com • U.S. CAGE code 06324 • SuperSeal™ Catalog
Dimensions in Inches (millimeters) are subject to change without notice.

667-398 Spring Loaded Flop-Lid Cover for 38999 Series III Type Feed Thru Connector

How To Order					
Sample Part Number		**667-398**	**NF**	**17**	**F0**
Product Series-Basic No.	**667-398** = Flop Cover				
Material and Finish	See Material and Finish Table				
Connector Shell Size	See Dimensions Table				
Cover Mounting	**FO** = Front Mounting **R1**, **R2**, **R3**, **R4** = Rear Mounting See Table I for Panel Thickness Guidelines				

Dimensions														
Shell Size	A Dim ±.012 (.31)		B Dim		C Dim		E Dim		F Dim		H Dim ±.008 (.20)		J Dim ±.008 (.20)	
	In	mm	In	mm	In	mm	In	mm	In	mm	In	mm	In	mm
17	1.542	39.17	1.062	26.97	.969	24.61	.485	12.32	.531	13.49	.194	4.93	.128	3.25
19	1.636	41.55	1.156	29.36	1.062	26.97	.531	13.49	.578	14.68	.194	4.93	.128	3.25

contact facotry for other shell sizes

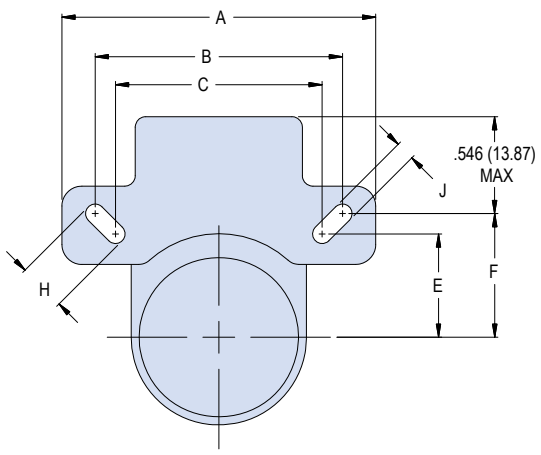

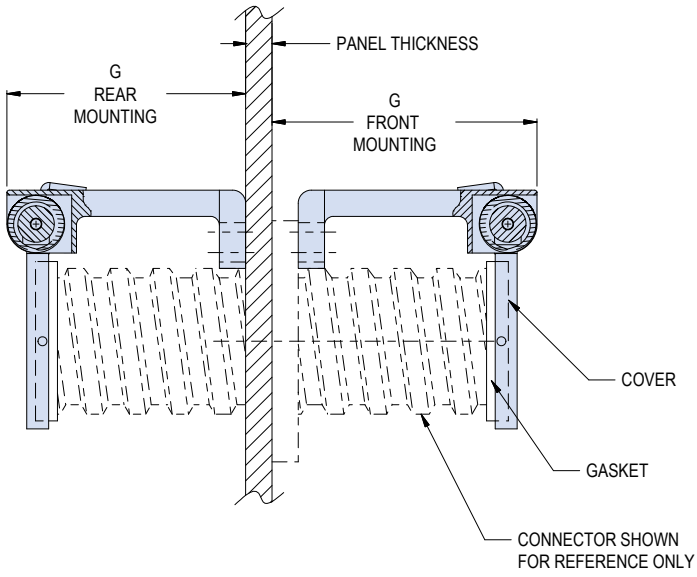

Material and Finish		
Symbol	Material	Finish Description
MT	Aluminum	Nickel-PTFE
ZR		Zinc ni, black (tri-valet cr)
M		eletroless nickel
NF		cadmium plate/olive drab over eletroless nickel
Z1	SST	passivate
XB	Composite	color black

Cover Mounting Dash Number		
Dash No.	Panel Thickenss ±.030	G Max
FO	N/A	.845 (21.46)
R1	.062 (1.57)	.981 (24.91)
R2	.125 (3.18)	.918 (23.32)
R3	.188 (4.78)	.855 (21.72)
R4	.250 (6.35)	.793 (20.14)

© 2016 Glenair, Inc • 1211 Air Way, Glendale, CA 91201 • 818-247-6000 • www.glenair.com • U.S. CAGE code 06324 • SuperSeal™ Catalog
Dimensions in Inches (millimeters) are subject to change without notice.

Series ITS Protective Covers for Wall Mount and Jam Nut Receptacle Connectors

How To Order					
Sample Part Number			**ITB02**	**TF**	**-17**	**F6**
Series/Basic Part No.	**ITB02** = Wall Mount Attachment Style	**ITB07** = Jam Nut Attachment Style (See Note 1)			
Attachment Type	**TF** = Stainless Steel Wire Rope	**T** = Sash Chain			
Connector Size	**17** = Shell Size 16	**18** = Shell Size 18			
Material/Finish Options	**F6** = Aluminum/Black Polymer Electrocoat **F11** = Aluminum/Electroless Nickel	**F7** = Aluminum/Conductive Black Zinc Nickel **Omit** for Aluminum/Cadmium, Olive Drab			

ITS (ITB02) WALL MOUNT RECEPTACLE COVER

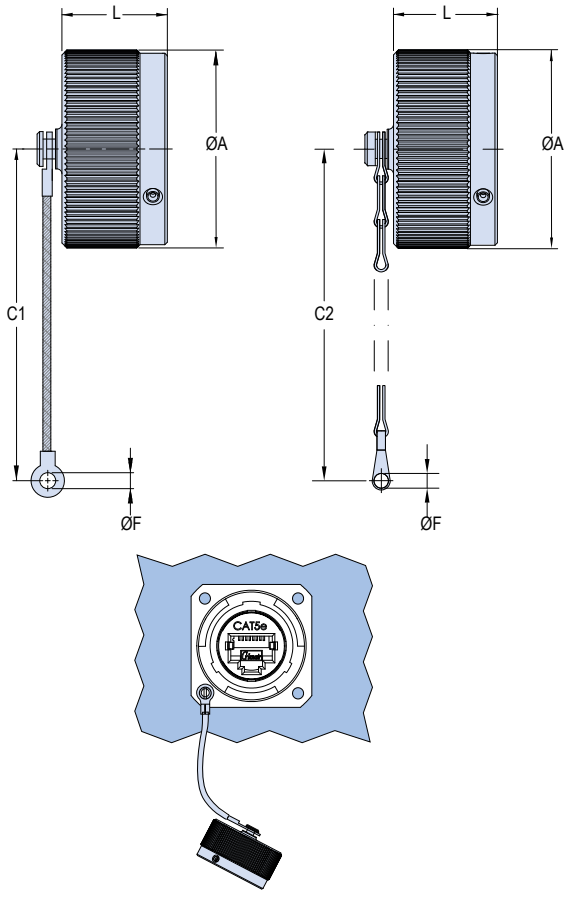

ITS (ITB07) JAM NUT MOUNT RECEPTACLE COVER

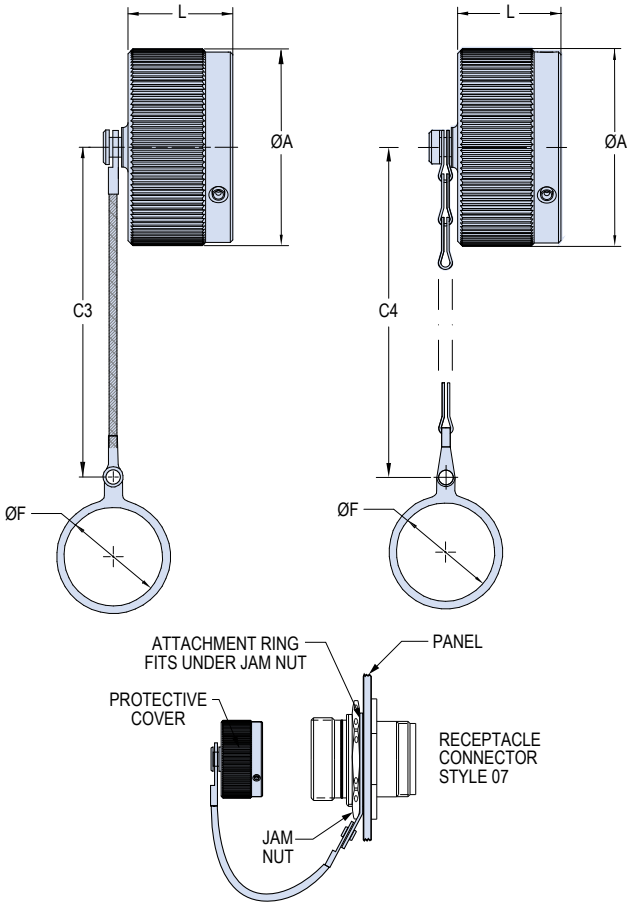

Dimensions								
Shell Size Code	Connector Size	ØA ±.020 (±0.5)	Wall Mount		Jam Nut		ØF +.007 (+0.2) -.003 (-0.1)	L Max.
			Wire Rope C1Min.	Sash Chain C2 Min.	Wire Rope C3 Min.	Sash Chain C4 Min.		
-17	16	1.26 (32.0)	7.60 (193)	4.84 (123)	8.19 (208)	5.39 (137)	.170 (4.3)	.83 (21.0)
-18	18	1.44 (36.5)	7.60 (193)	4.84 (123)	8.19 (208)	5.43 (138)	.17 (4.3)	.85 (21.7)

NOTES

1. For plug covers contact factory

© 2016 Glenair, Inc • 1211 Air Way, Glendale, CA 91201 • 818-247-6000 • www.glenair.com • U.S. CAGE code 06324 • SuperSeal™ Catalog
Dimensions in Inches (millimeters) are subject to change without notice.

Series IPT Protective Covers for Wall Mount and Jam Nut Receptacle Connectors

How To Order				
Sample Part Number	**IPT3181**	**-18**	**CF**	**F6**

Series/Basic Part No.	**IPT3181** = Receptacle Cover (See Note 1)
Connector Size	**16** = Shell Size 16 **18** = Shell Size 18
Lanyard Style	**Wall Mount** **C** = Sash Chain **CF** = Nylon Cord **Z1C** = Nylon Cord with Loose Terminal and Sleeve **Jam Nut Mount** **N** = Sash Chain **NF** = Nylon Cord
Finish Options	**F6** = Aluminum/Black Polymer Electrocoat **F11** = Aluminum/Electroless Nickel **F7** = Aluminum/Conductive Black Zinc Nickel **Omit** for Aluminum/Cadmium, Olive Drab

IPT WALL MOUNT RECEPTACLE COVER

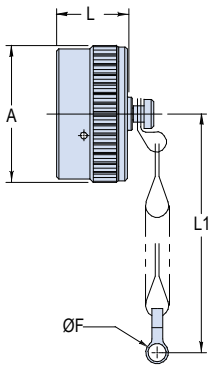

Example: IPT3181-18C
(Stainless Steel Sash Chain)

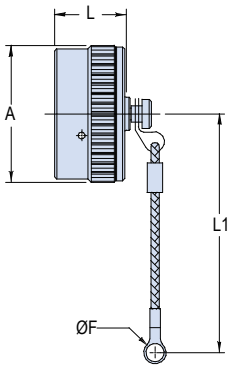

Example: IPT3181-18CF
(Nylon Cord)

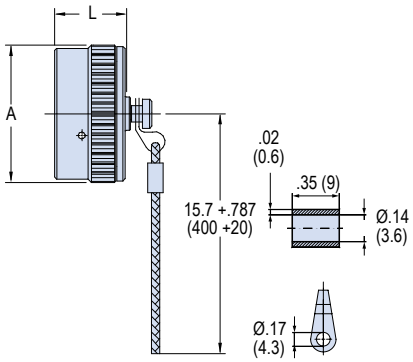

Example: IPT3181-18Z1C
(Nylon Cord with loose terminal and sleeve)

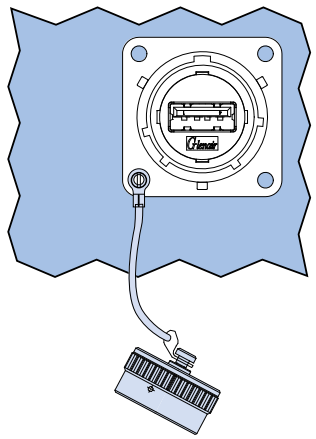

IPT JAM NUT MOUNT RECEPTACLE COVER

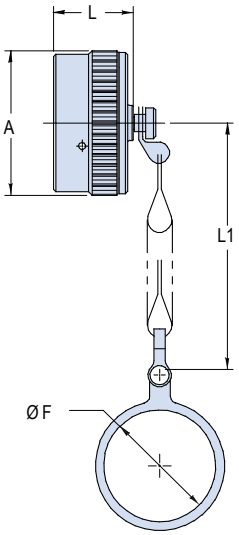

Example: IPT3181-18N
(Stainless Steel Sash Chain)

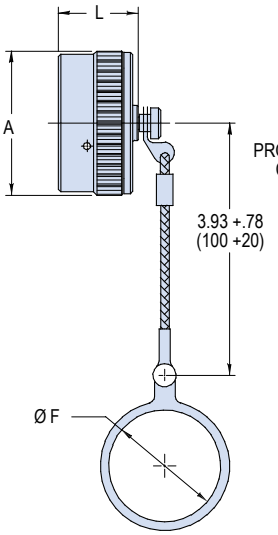

Example: IPT3181-18NF
(Nylon Cord)

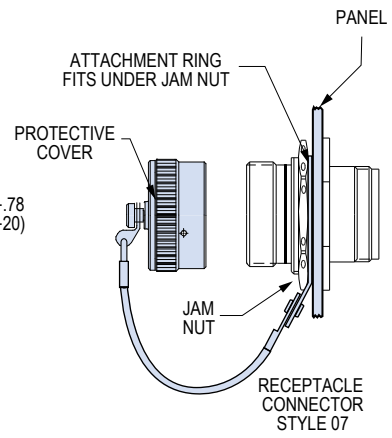

Dimensions for Wall Mount and Jam Nut Covers				
Shell Size	**A Max.**	**ØF +.874 (+0.2) -.004 (-0.1)**	**L +.197 (+0.5) -0 (-0)**	**L1 Min.**
16	1.256 (31.90)	.169 (4.3)	.563 (14.30)	3.5 (88.9)
18	1.378 (35.00)	.169 (4.3)	.563 (14.30)	3.5 (88.9)

NOTES

1. For plug covers contact factory

© 2016 Glenair, Inc • 1211 Air Way, Glendale, CA 91201 • 818-247-6000 • www.glenair.com • U.S. CAGE code 06324 • SuperSeal™ Catalog
Dimensions in Inches (millimeters) are subject to change without notice.

310-001 Shrink Boot Adapter with Rotatable Coupling for 28840 Type Connectors



How To Order						
Sample Part Number	**310**	**G**	**S**	**001**	**M**	**17**
Series/Basic Part No.	**310** - Shrink Boot Adapter					
Connector Designator	**G** = 28840					
Angular Function	**S** = Straight For 45° and 90° versions contact factory					
Basic Part No.	**001**					
Finish	See Material and Finish Table					
Shell Size	**15**, **17**, **19**					

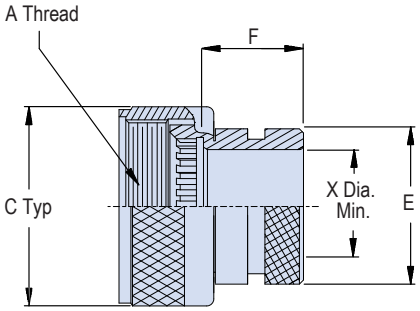

Materials and Finishes	
NF	Aluminum/ Cadmium olive drab
M	Aluminum/ Electroless nickel
MT	Aluminum/ Nickel PTFE
ZR	Aluminum/ Zinc-nickel black
Z1	Stainless Steel/ Passivate

Dimensions					
Shell Size	**A Thread**	**C Typ**	**E Max**	**F Max**	**X Dia. Min.**
15	M22 X 1 -- 6H	1.07 (27.2)	.838 (21.3)	.940 (23.9)	.565 (14.4)
17	M25 X 1 -- 6H	1.21 (30.7)	.963 (24.5)	.940 (23.9)	.690 (17.5)
19	M28 X 1 -- 6H	1.36 (34.5)	1.042 (26.5)	.940 (23.9)	.769 (19.5)

Recommnded Shrink Boot*		
Shell Size	**Shrink Boot with Low Temp Adhesive**	**Shrink Boot without Low Temp Adhesive**
15	**770-028S904** Lipless boot	**770-028S904U** Lipless boot
17	**770-028S906**	**770-028S906U**
19	**770-028S906**	**770-028S906U**

*** Shrink Boot MUST be ordered seperately.**
Shrink boot material: compound 2013 low temperature polyolefin.

© 2016 Glenair, Inc • 1211 Air Way, Glendale, CA 91201 • 818-247-6000 • www.glenair.com • U.S. CAGE code 06324 • SuperSeal™ Catalog
Dimensions in Inches (millimeters) are subject to change without notice.

370-007 Cable Sealing Backshell with Rotatable Coupling for 28840 Type Connectors

How To Order									
Sample Part Number	**370**	**G**	**S**	**007**	**M**	**17**	**03**	**D**	**1.5**

Series/Basic Part No.	**370** - low Profile
Connector Designator	**G** = 28840
Angular Function	**J** = 90° **H** = 45° **S** = Straight
Basic Part No.	**007**
Finish	See Material and Finish Table
Shell Size	**15**, **17**, **19**
Dash No.	See Dash Number Table
Strain Relief Style	**D** = Nut
Length	1/2 inch increments (e.g. 6 = 3 inches); Straight only

Straight (S)

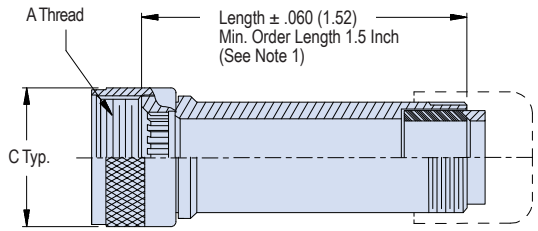

45° (H)

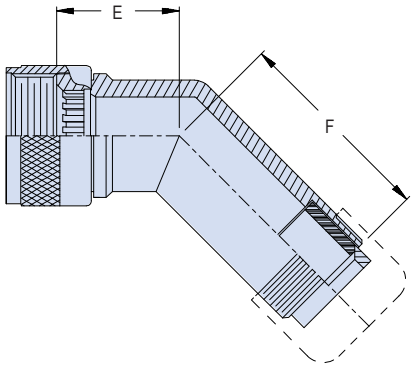

90° (J)

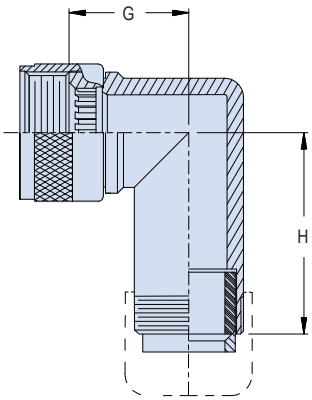

STRAIN RELIEF STYLE D

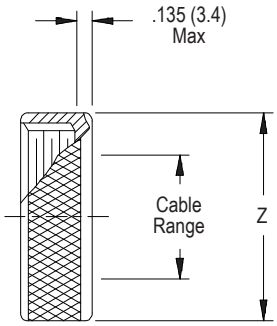

Dimensions						
Shell Size	A Thread	C Typ.	E Max	F Max	G Max	H Max
15	M22 X 1 -- 6H	1.07 (27.2)	.645 (16.4)	2.359 (59.9)	.700 (17.8)	2.369 (60.2)
17	M25 X 1 -- 6H	1.21 (30.7)	.738 (18.7)	2.469 (62.7)	.885 (22.5)	2.459 (62.5)
19	M28 X 1 -- 6H	1.36 (34.5)	.926 (23.5)	2.659 (67.5)	.975 (24.8)	2.629 (66.8)

Materials and Finishes	
NF	Aluminum/ Cadmium, olive drab
M	Aluminum/ Electroless nickel
MT	Aluminum/ Nickel PTFE
ZR	Aluminum/ Zinc-nickel black
Z1	Stainless Steel/ Passivate

Dash Number			
Dash No.	Z Max	Cable Range	
		Min.	Max.
03	.630 (16.0)	.250 (6.4)	.250 (6.4)
04	.755 (19.2)	.312 (7.9)	.312 (7.9)
06	.942 (23.9)	.438 (11.1)	.438 (11.1)

© 2016 Glenair, Inc • 1211 Air Way, Glendale, CA 91201 • 818-247-6000 • www.glenair.com • U.S. CAGE code 06324 • SuperSeal™ Catalog
Dimensions in Inches (millimeters) are subject to change without notice.

660-011 Series 66 Protective Covers for 28840 Type Receptacle Connectors

How To Order

Sample Part Number	660	-011	M	D	H	5	-01

Series	**660** = Series 66
Cover Type	**-011** = Metal Receptacle Cover (See Note 2)
Material and Finish	See Material and Finish Table
Shell Size Designator	**C**, **D**, **E**
Lanyard Type	**D**, **S**, **F**, **G**, **H**, **R**, **T**, **U** (See Lanyard Type Table)
Lanyard Length	Length in inches; i.e. 3 = 3 inches
Ring Style Dash No.	See Tables I, II or III for Ring Selection and Dash Number. Omit for "SK" slip knot attachment

Table I: Dash No. for Small Ring

Dash No.	P Dia ± .010 (0.3)	Dash No.	P Dia ± .010 (0.3)
01	.140 (3.6)	06	.125 (3.2)
02	.182 (4.6)	07	.218 (5.5)
03	.191 (4.9)	09	.156 (4.0)
04	.197 (5.0)	00	no eyelet
05	.167 (4.2)		

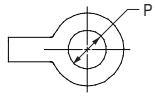

For attachment to panel

Table II: Dash No. for Solid Ring (Type A)

Dash No.	Shell Size	N
208	15 (C)	1.203 (30.6)
109	17 (D)	1.266 (32.2)
111	19 (E)	1.521 (38.6)

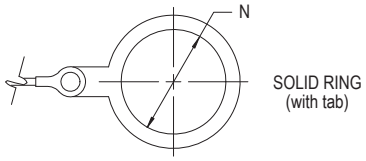

For attachment behind jam nut

Dimensions

Shell Size Designator	Shell Size (Ref.)	F Thread	F Max
C	15	1.062 - 0.1P-0.2L-DS	1.260 (32.0)
D	17	1.125 - 0.1P-0.2L-DS	1.457 (37.0)
E	19	1.312 - 0.1P-0.2L-DS	1.535 (39.0)

Lanyard Type

Sym	Attachment
D	Bead chain, cres passivated, w/ terminal
F	Wire rope, nylon jacket w/ terminal
G	Nylon rope
H	Wire rope, fluoropolymer jacket w/ terminal
N	Attachment omitted
R	Wire rope, PVC jacket w/terminal
T	Wire rope, no jacket, w/terminal
S	#8 Sash chain, cres, passivate
U	Wire rope, polyurethane jacket with terminal

Materials and Finishes[2]

NF	Aluminum/Cadmium, Olive Drab
M	Aluminum/Electroless Nickel
MT	Aluminum/Nickel PTFE
ZR	Aluminum/Zinc-Nickel Black
Z1	Stainless Steel/Passivate

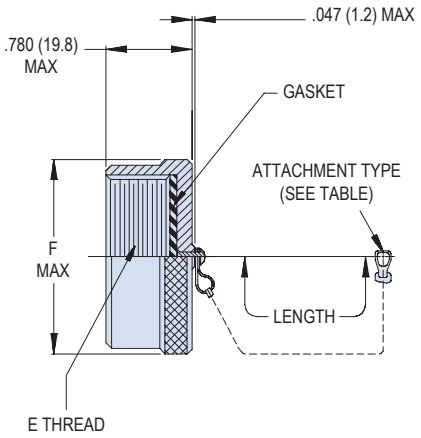

NOTES

1. Length tolerance for Sash Chain (S) is ± 1 link, for all other attachments ± .25.
2. For plug covers contact factory
3. Material and Finish
   - Gasket: Silicone
   - Components, rivet: Stainless Steel/ Passivate

Lanyard Types

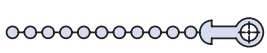

Bead Chain (Type D)

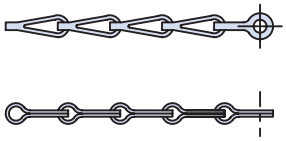

Sash Chain (Type S)

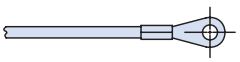

Rope (Types F, G, H, R, T, U)

© 2016 Glenair, Inc • 1211 Air Way, Glendale, CA 91201 • 818-247-6000 • www.glenair.com • U.S. CAGE code 06324 • SuperSeal™ Catalog
Dimensions in Inches (millimeters) are subject to change without notice.

440MS134 straight environmental, direct coupling adapter for Series 801, 804 and 805 Mighty Mouse



Band-Master ATS® Band
Microband 601-061
See Page M-7





Add a boot or overmold for environmental protection (Shown without boot)

These adapters are used with Band-Master ATS® micro band shield termination straps. Choose the smallest cable entry for your wire bundle.

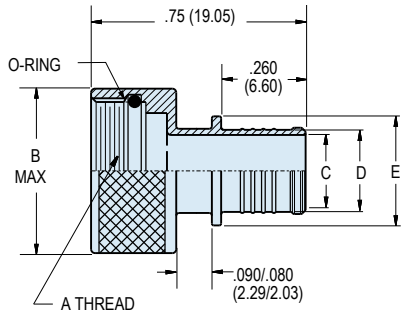

STRAIGHT ENTRY
DIRECT COUPLING
440MS134

NOTES

1. For use with Micro USB Mighty Mouse Series 801 and 805
2. Material and Finish
   - Band: 300 Series SST
   - O-Ring: Silicone Elastomer

How To Order					
Sample Part Number	**440MS134**	**NF**	**08**	**04**	**B**
Series (See Table I)	**440MS134** = Straight Entry				
Shell Material and Finish	**M** = Aluminum/Electroless Nickel **NF** = Aluminum/Cadmium with Olive Drab **ZN** = Aluminum/Zinc-Nickel with Olive Drab Chromate **ZNU** = Aluminum/Zinc-Nickel with Black Chromate **MT** = Aluminum/Nickel-PTFE **Z1** = Stainless Steel/Passivated				
Adapter Size Code	**08**, **10**, **14**, **16** See Adapter Size Code and Dimensions Table				
Cable Entry Size (See Table i)	**04**, **05**, **06**, **07**, **08** See Table 1 for Dimensions				
Band Option	**B** = 601-060 flat band supplied **K** = 601-061 pre-coiled band supplied **Omit** = no band supplied				

Adapter Size Code and Dimensions						
Adapter Size Code	Shell Size Reference 801/804	Shell Size Reference 805	A Thread Class -2B	B Max. In.	B Max. mm.	Dash No.
08[1]	8	10	1/2-28 UNEF	.595	15.11	**04** thru **08** See Table 1 for Dimensions
10	10	n/a	5/8-24 UNEF	.715	18.16	
14	14/15/16/17	18	15/16-20 UNEF	1.020	25.91	
16	19	21	1 1/16-18 UNEF	1.155	29.34	

Table I: Cable Entry, Band Platform Dimensions and Recommended Shrink Boot							
	Ø C		Ø D		Ø E		
Dash No.	In. ± .015	mm. ± 0.38	In. ± .015	mm. ± 0.38	In. ± .015	mm. ± 0.38	Straight Shrink Boot*
04	.234	5.94	.273	6.93	.375	9.53	**770-003S901W2**
05	.272	6.91	.311	7.90	.413	10.49	**770-003S902W2**
06	.312	7.92	.351	8.92	.453	11.51	**770-003S902W2**
07	.375	9.53	.414	10.52	.516	13.11	**770-003S903W2**
08	.438	11.13	.477	12.12	.579	14.17	**770-003S903W2**

*** Shrink Boot MUST be ordered seperately.**
Shrink boot material: compound 2013 low temperature polyolefin with W2 hot melt adhesive.

© 2016 Glenair, Inc • 1211 Air Way, Glendale, CA 91201 • 818-247-6000 • www.glenair.com • U.S. CAGE code 06324 • SuperSeal™ Catalog
Dimensions in Inches (millimeters) are subject to change without notice.

440-135 EMI/RFI, Rotatable Coupling, Shrink Boot Band Adapter for Series 801, 804 and 805 Mighty Mouse





Band-Master ATS® Band
Microband 601-061
See Page M-7



Add a boot or overmold for environmental protection (Shown without boot)



Band-Master ATS® Micro Band Tool 601-101
See Page M-7

These thread-on adapters are used with ***Band-Master ATS® Micro Band*** shield termination straps. Choose the smallest cable entry for your wire bundle. ***Straight Entry*** adapters are available in various lengths. ***Straight***, ***45°*** and ***90°*** adapters feature rotatable coupling nuts.

How To Order						
Sample Part Number	**440MS135**	**M**	**08**	**07**	**-7**	**K**
Series (See Table I)	**440MS135** = Straight Entry **440MK135** = 45° Entry **440ML135** = 90° Entry					
Shell Material and Finish	**UCR** = Aluminum/Zinc Cobalt Black **M** = Aluminum/Electroless Nickel **NF** = Aluminum/Cadmium with Olive Drab **ZNU** = Aluminum/Zinc-Nickel with Black Chromate **MT** = Aluminum/Nickel-PTFE **Z1** = Stainless Steel/Passivated					
Shell Size Code	**08**, **14**, **16** (See Dimensions Table)					
Dash No.	**04**, **05**, **06**, **07** (See Dash No. Table)					
Length	Applies to symbol "S", straight only Length in .125 (3.18mm) inch increments (i.e. 7 = .875 inches)					
Band Option	**K** = Pre-coiled Band Supplied (601-061) **B**= Band Supplied (601-060) **Omit** for no band supplied					

Table I: Cover Style		
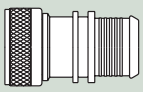	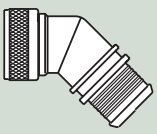	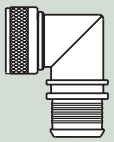
440MS135 Straight Entry	**440MK135** 45° Entry	**440ML135** 90° Entry

NOTES

1. Standard Minimum Length is .75. applies to symbol "S" straight only.
2. Material and Finish
   - Band: 300 series SST
   - O-ring: silicone elastomer

© 2016 Glenair, Inc • 1211 Air Way, Glendale, CA 91201 • 818-247-6000 • www.glenair.com • U.S. CAGE code 06324 • SuperSeal™ Catalog
Dimensions in Inches (millimeters) are subject to change without notice.

440-135 EMI/RFI, Rotatable Coupling, Shrink Boot Band Adapter for Series 801, 804 and 805 Mighty Mouse

Dimensions														
Shell Size Code	Shell Size Reference		A Thread Class -2B	B Max		C Max.		D Max.		E Max.		F Max.		Max Dash No.
	801 & 804	805		In	mm	In	mm	In	mm	In	mm	In	mm	
08	8	10	1/2-28 UNEF	.70	17.78	.58	14.73	.70	17.78	.74	18.80	.86	21.84	07 See Table I
14	14,15,16,17	18,19	15/16-20 UNEF	1.137	28.88	.69	17.53	.80	20.32	.95	24.13	1.09	27.69	
16	19	21	1 1/16-18 UNEF	1.230	31.24	.71	18.03	.82	20.83	.98	24.89	1.13	28.70	

Table I: Cable Entry and Band Platform Dimensions							
Dash No.	L Dia		M Dia		N Dia		Straight Shrink Boot*
	in	mm	in	mm	in	mm	
04	.250	6.35	.289	7.34	.391	9.93	809S060-1L
05	.312	7.92	.351	8.92	.453	11.51	809S060-2L
06	.375	9.53	.414	10.52	.516	13.11	809S060-3L
07	.438	11.13	.477	12.12	.579	14.71	809S060-3L

*** Shrink Boot MUST be ordered seperately.**

Shrink boot material:
compound 2013 low temperature polyolefin with W2 hot melt adhesive.

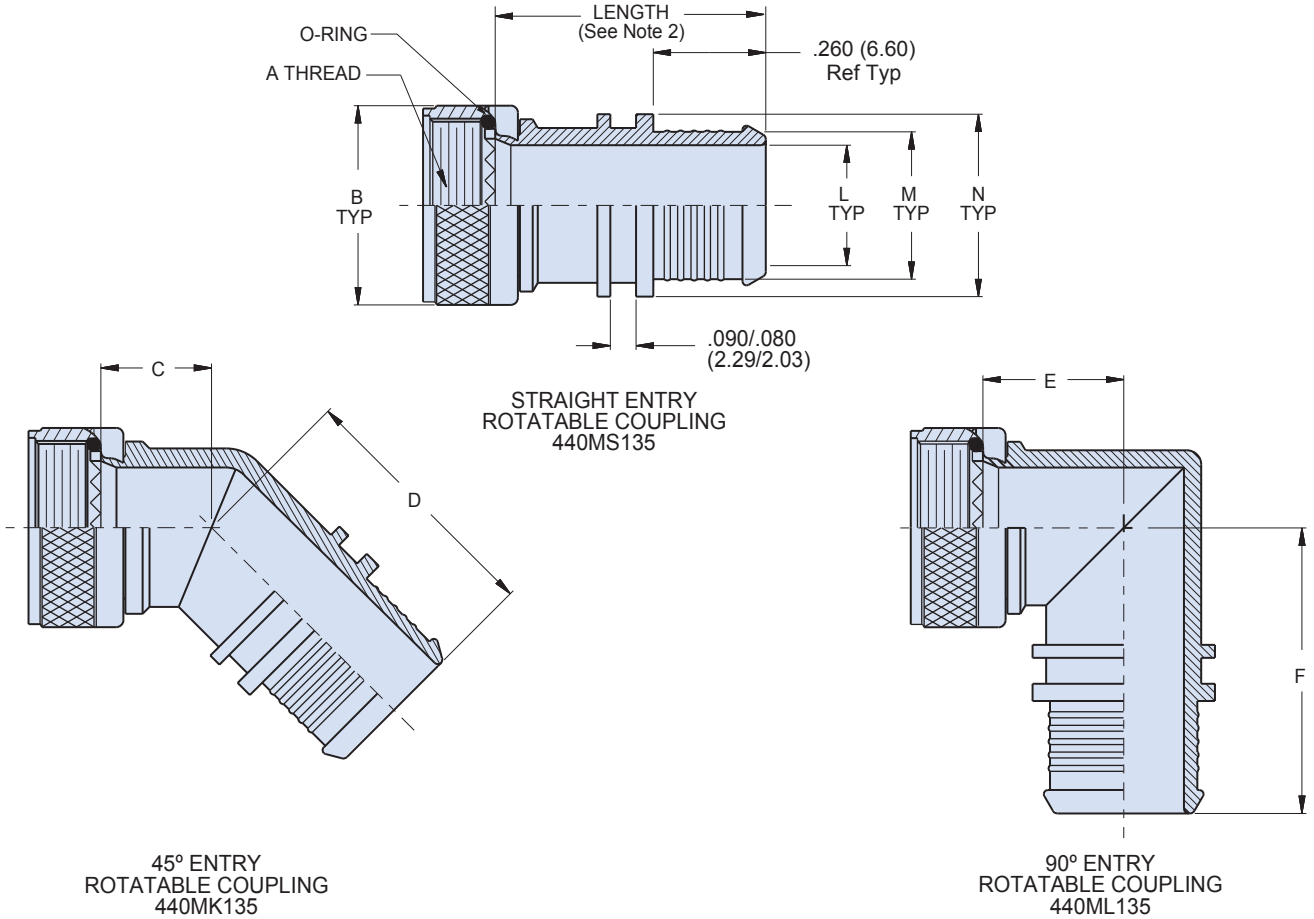

© 2016 Glenair, Inc • 1211 Air Way, Glendale, CA 91201 • 818-247-6000 • www.glenair.com • U.S. CAGE code 06324 • SuperSeal™ Catalog
Dimensions in Inches (millimeters) are subject to change without notice.

667-387 Spring Loaded Flop-Lid Cover for Series 804 Rear Panel Mount Jam Nut Connector

How To Order					
Sample Part Number		**667-387**	**NF**	**15**	**F0**
Product Series-Basic No.	**667-387** = Mighty Mouse Series 804 Flop-Lid Cover				
Material and Finish	See Material and Finish Table				
Connector Shell Size	See Dimensions Table				
Panel Thickness	**1** = .063 ±.03 (1.60 ±.8)	**2** = .125 ±.03 (3.18 ±.8)			

Dimensions										
	A Dim)		B Dim		C Dia		D Flat		E Dim	
Shell Size	In	mm	In	mm	In	mm	In	mm	In	mm
15	1.42	36.1	.89	22.6	1.070	27.18	1.041/1.037	26.44/26.34	1.74	44.20

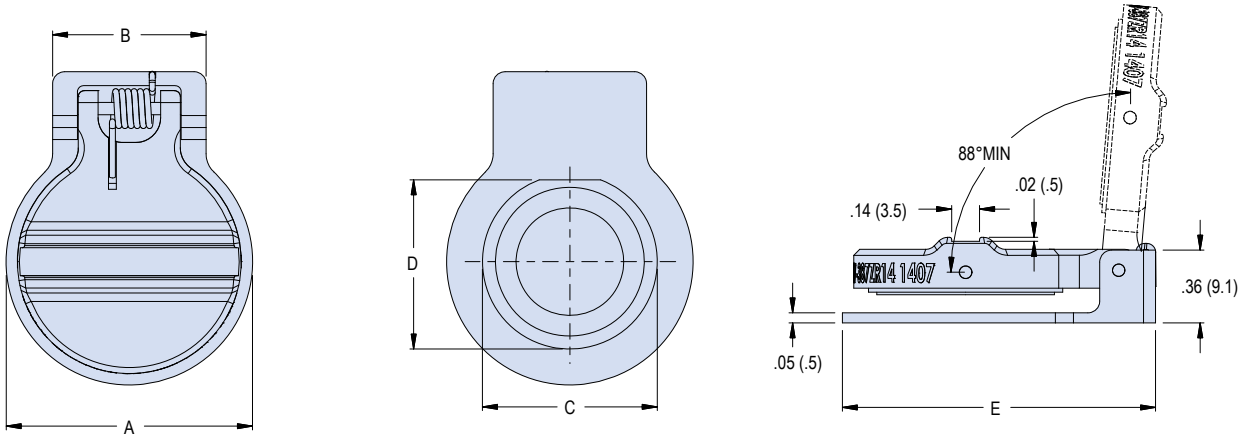

Material and Finish		
Sym	Material	Finish Descrition
M	Aluminum	electroless nickel
NF		Cadmium with Olive Drab
ZN		Zinc-Nickel with Olive Drab Chromate
ZNU		Zinc-Nickel with Black Chromate
MT		Aluminum / Nickel-PTFE
Z1	SST	passivated

NOTES

1. Mates to Glenair 804 series rear mouning jam nut connectors
2. Hardware Material and finish
   - Housing, cover: see Material and Finish Table
   - Shaft, spring: cress/passivate
   - Sleeve: delrin
   - Gasket: silicone/NA

© 2016 Glenair, Inc • 1211 Air Way, Glendale, CA 91201 • 818-247-6000 • www.glenair.com • U.S. CAGE code 06324 • SuperSeal™ Catalog
Dimensions in Inches (millimeters) are subject to change without notice.

667-424 Spring Loaded Flop-Lid Cover for Series 805 Wall Mount and Jam Nut Connectors

How To Order						
Sample Part Number	**667-424**	**NF**	**18**	**T0**	**J**	**59**
Product Series-Basic No.	**667-424** = Mighty Mouse Series 805 Flop-Lid Cover					
Material and Finish	See Material and Finish Table					
Connector Shell Size	See Dimensions Table					
Panel Thickness	See Panel Thickness Table for Dash No.					
Type of Mounting	**J** = Jam Nut **W** = Wall Mount					
Condutive Silicone	Omit for Non-conductive **59** = Conductive Silicone					

Panel Thickness				
Dash No	Panel Thickness	Shell Size	H Max Jam Nut Mount	H Max Wall Mount
T0	.000	8-18	N/A	.914
		19-23	N/A	.952
T1	.062 (See Note 1)	8-18	.993	.852
		19-23	1.031	.890

Dimensions														
Shell Size	A Dim		B Dim		C Dim		D ±.002 (.05)		E ±.031 (.79)		F Dim ±.031 (.78)		G Dim ±.031 (.78)	
	In	mm	In	mm	In	mm	In	mm	In	mm	In	mm	In	mm
10	0.975	20.03	0.785	16.12	0.393	8.07	0.094	1.93	0.825	16.95	0.906	18.61	0.79	16.23
18	1.475	30.30	1.255	25.78	0.628	12.90	0.128	2.63	1.106	22.72	1.465	30.09	1.1	22.59
19	1.537	31.57	1.327	27.26	0.664	13.64	0.128	2.63	1.34	27.52	1.535	31.53	1.338	27.48
21	1.663	34.16	1.452	29.82	0.726	14.91	0.128	2.63	1.465	30.09	1.814	37.26	1.478	30.36

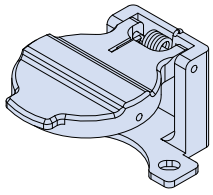

FOR WALL MOUNT RECEPTACLE

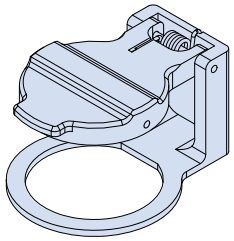

FOR JAM NUT MOUNT RECEPTACLE

Material and Finish		
Symbol	Material	Finish Descrition
M	Aluminum	Electroless nickel
NF		Cadmium with Olive Drab
ZN		Zinc-Nickel with Olive Drab Chromate
ZNU		Zinc-Nickel with Black Chromate
MT		Aluminum / Nickel-PTFE
Z1	SST	passivated

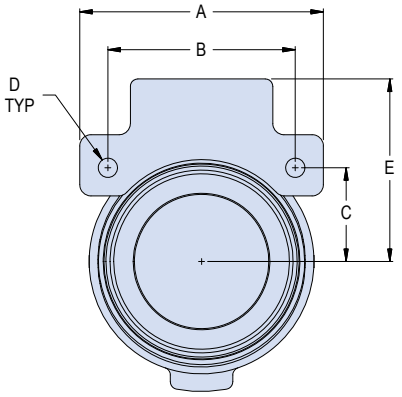

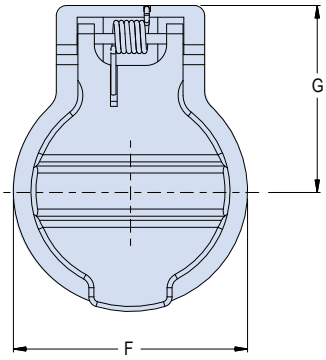

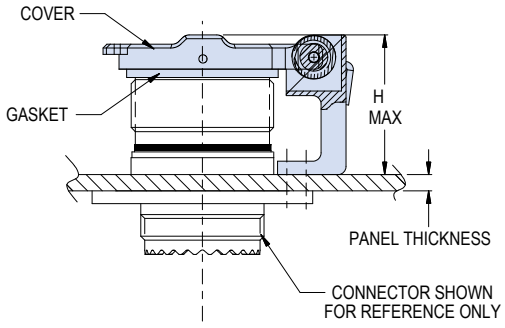

NOTES

1. Cover Fits nominaly onto panel with .062 thickness, but will also work for panels as thin as .031
2. Hardware Material and finish
   - Cover: see Material and Finish Table
   - Spring: stainless steel/passivate
   - Sleeve: delrin
   - Gasket: silicone/NA

© 2016 Glenair, Inc • 1211 Air Way, Glendale, CA 91201 • 818-247-6000 • www.glenair.com • U.S. CAGE code 06324 • SuperSeal™ Catalog
Dimensions in Inches (millimeters) are subject to change without notice.

667-218 Receptacle Metal Protective Covers for Mighty Mouse Series 801 Connectors

Protect Connectors From Damage Machined aluminum covers have rubber gaskets for a watertight fit.

Stainless Steel Fittings and Rings Choose small diameter eye fittings for panel attachment. Larger rings fit under the jam nut or over cable jackets.

Polyurethane-Coated SST Wire Rope offers high strength, excellent abrasion resistance and good flexibility. Or, select a fluoropolymer jacket for high temperature exposure.

Braided Nylon Rope provides excellent flexibility and good abrasion resistance, and can be ordered with slip knot fittings for easy installation on any size cable.

How To Order

Sample Part Number	667-218	-M	-G	9	04	-6
Series (See Table I)	667-218 = Receptacle Cover (see note 1)					
Material and Finish	M = Aluminum/Electroless Nickel RoHS Compliant MT = Aluminum/Nickel-PTFE RoHS Compliant NF = Aluminum/Cadmium with Olive Drab Chromate ZNU = Aluminum/Zinc-Nickel with Black Chromate Z1 = Stainless Steel/Passivated RoHS Compliant					
Attachment Type	D = Bead Chain, CRES, Passivate G = Nylon Rope N = No Attachment S = SST Sash Chain T = SST Wire Rope, No Jacket F = Wire Rope, Nylon Jacket H = SST Wire Rope, Fluropolymer Jacket R = Wire Rope, PVC Jacket SK = Nylon Rope With Slip Knot U = SST Wire Rope, Polyurethane Jacket "SST" = Stainless Steel					
Shell Size	8, 16, 17, 19					
Attachment Code (See Table II)	Small Ring (Attached to Panel)= 01 thru 06 Solid Ring (Rear Panel Mount Jam Nut Application) = 14 thru 33					
Attachment Length (inches)	Omit for attachment Type N (No Attachment) Example "-6" equals six inch length					

Table I: Cover Style

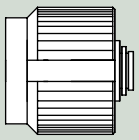

667-218
Receptacle Cover

NOTES

1. For plug covers contact factory
2. Material and Finish
   - Cover: Aluminum alloy or stainless steel
   - Gasket: Fluorosilicone rubber
   - Wire,Hardware: Stainless steel, passivated

© 2016 Glenair, Inc • 1211 Air Way, Glendale, CA 91201 • 818-247-6000 • www.glenair.com • U.S. CAGE code 06324 • SuperSeal™ Catalog
Dimensions in Inches (millimeters) are subject to change without notice.

667-218 Receptacle Metal Protective Covers for Mighty Mouse Series 801 Connectors

667-218 Cover Attachment for RPM Jam Nut Receptacle

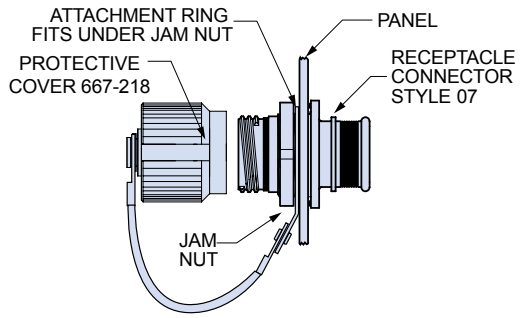

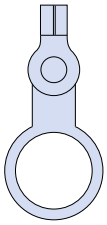
Solid Ring

Attchmt Code	Shell Size	Ring I.D. In. ± .010	Ring I.D. mm. ±0.25	Ring O.D. In. ± .015	Ring O.D. mm. ± 0.38
16	8	.570	14.48	.69	17.40
20	16	1.070	27.17	1.20	30.35

667-218 Cover Attachment to a Panel with a Screw

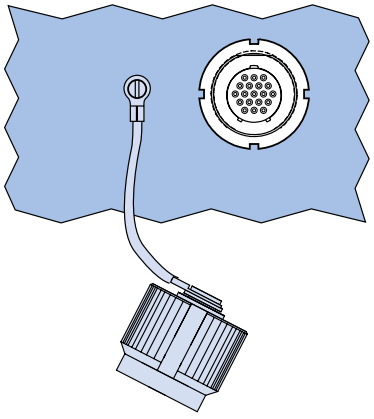

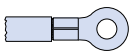
Small Ring for Attaching Receptacle Covers to a Panel with a Screw

Attchmt Code	Screw Size	Ring I.D. In. ±.005	Ring I.D. mm. ±0.13	Ring O.D. In. Max.	Ring O.D. mm. Max.
01	#4, M3	.126	3.20	.31	7.9
02	#6	.145	3.68	.31	7.9
04	#8, M4	.188	4.78	.31	7.9
06	#10	.197	5.00	.31	7.9

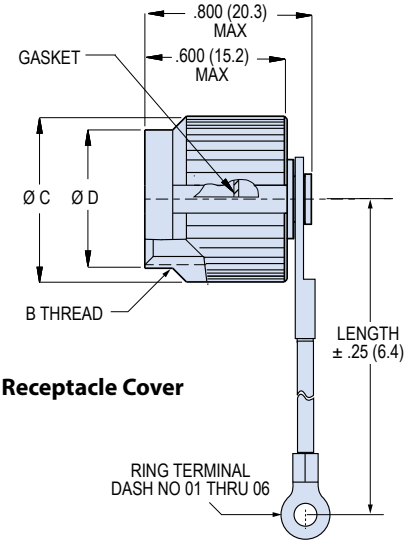

667-218 Receptacle Cover

Shell Size	Ø A Max. In.	Ø A Max. mm.	Ø B Max. In.	Ø B Max. mm.	Ø D Max. In.	Ø D Max. mm.	C Thread
8	.653	16.6	.675	17.15	.587	14.9	.5000-.05-.1L
16	1.150	29.2	1.261	32.03	1.092	27.7	1.000-.1P-.2L

Lanyard Options

 Nylon Rope	-65° to +100°C., black, very flexible, very good abrasion resistance, good resistance to fuels, .120" (3mm) diameter
 Polyurethane Coated Wire Rope	Black polyurethane over stainless steel rope, -65° to +125°C., very flexible, excellent abrasion resistance, excellent resistance to fuels, .080" (2mm) diameter
 Fluoropolymer Jacketed Wire Rope	Translucent FEP jacket over stainless steel, -65° to +200°C., fair flexibility, good abrasion resistance, .100" diameter
 Sash Chain	Stainless steel, #8 chain, .240" (6mm)
 Slip Knot (SK) for Attaching Covers to Cable	65° to +100°C., black, very flexible, very good abrasion resistance, good resistance to fuels, .120" (3mm) diameter. Length includes .5" (13mm) diameter loop.

© 2016 Glenair, Inc • 1211 Air Way, Glendale, CA 91201 • 818-247-6000 • www.glenair.com • U.S. CAGE code 06324 • SuperSeal™ Catalog
Dimensions in Inches (millimeters) are subject to change without notice.

667-202 Receptacle Metal Protective Cover for Mighty Mouse Series 804 connectors

Protect Connectors From Damage
Machined aluminum covers prevent ingress of contamination and water.

Stainless Steel Fittings and Rings
Choose small diameter eye fittings for panel attachment. Larger rings fit under the jam nut or over cable jackets. Split rings can be installed on fully assembled cables.

Polyurethane-Coated SST Wire Rope offers high strength, excellent abrasion resistance and good flexibility. Or, choose Fluoropolymer® jacket for high temperature exposure.

Braided Nylon Rope provides excellent flexibility and good abrasion resistance, and can be ordered with slip knot fittings for easy installation on any size cable.

How To Order

Sample Part Number	667-202	M	8	H	6	-14	R

Series (See Table I)	**667-202** = Receptacle Cover (see note 1)
Shell Material / Finish	**M** = Aluminum/Electroless Nickel RoHS Compliant **NF** = Aluminum/Cadmium with Olive Drab Chromate **ZNU** = Aluminum/Zinc-Nickel with Black Chromate **MT** = Aluminun/Nickel-PTFE RoHS Compliant **Z1** = Stainless Steel/Passivated RoHS Compliant
Shell Size	**8**, **10**, **14**, **15**, **16**
Attachment Type	**D** = Bead Chain, CRES, Passivate **G** = Nylon Rope **N** = No Attachment **S** = SST Sash Chain **T** = SST Wire Rope, No Jacket **F** = Wire Rope, Nylon Jacket **H** = SST Wire Rope, Fluoropolymer Jacket **R** = Wire Rope, PVC Jacket **SK** = Nylon Rope With Slip Knot **U** = SST Wire Rope, Polyurethane Jacket "SST" = Stainless Steel
Attachment Length (inches)	Omit for attachment Type N (No Attachment) Example: "-6" equals six inch length
Attachment Code (See Table II)	Small Ring = **01** thru **06** Large Ring = **28** thru **30**
Pull Ring Option	**R** = Supplied with Pull Ring (Omit for none)

Table I: Cover Style

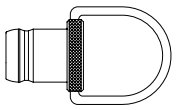

667-202
Push Pull Receptacle Cover with Pull Ring

NOTES

1. For plug covers contact factory
2. Material and Finish
   - Cover: Aluminum alloy or stainless steel
   - Hardware: Stainless steel, passivate

© 2016 Glenair, Inc • 1211 Air Way, Glendale, CA 91201 • 818-247-6000 • www.glenair.com • U.S. CAGE code 06324 • SuperSeal™ Catalog
Dimensions in Inches (millimeters) are subject to change without notice.

667-202 Receptacle Metal Protective Cover for Mighty Mouse Series 804 Connectors

667-202 Cover Attachment to RPM Jam Nut Receptacle

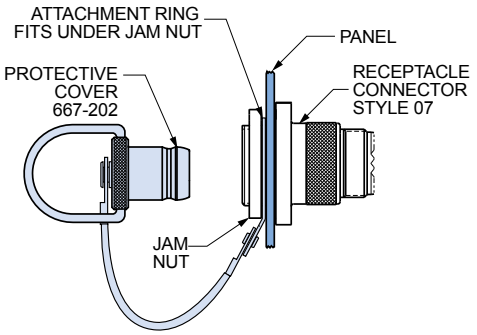

	Dia. Code	Shell Size	Ring I.D. In. ± .010	Ring I.D. mm. ±0.25	Ring O.D. In. ± .015	Ring O.D. mm. ± 0.38
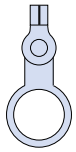 Large Ring	28	14, 15	1.015	25.78	1.20	30.48
	21	14, 15	1.135	28.8	1.25	31.8
	30	16	1.380	35.1	1.48	37.6

667-202 Cover Attachment to Panel

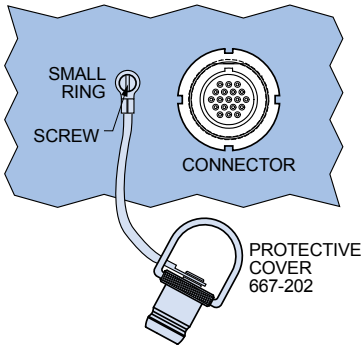

	Dia. Code	Screw Size	Ring I.D. In. ±.005	Ring I.D. mm. ±0.13	Ring O.D. In. Max.	Ring O.D. mm. Max.
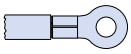 Small Ring for Attaching Receptacle Covers to a Panel with a Screw	01	#4, M3	.126	3.20	.31	7.9
	02	#6	.145	3.68	.31	7.9
	04	#8, M4	.188	4.78	.31	7.9
	06	#10	.197	5.00	.31	7.9

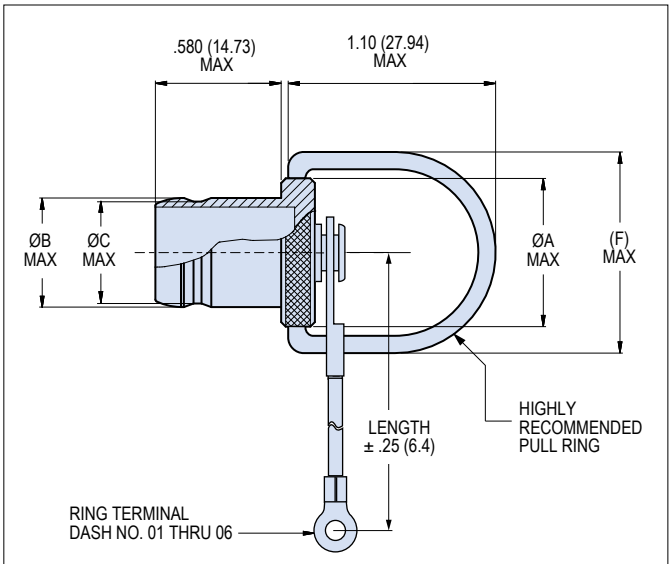

Dimensions

Shell Size	Ø A Max. In	Ø A Max. mm	Ø B In	Ø B mm	Ø C In	Ø C mm	(F) Max In	(F) Max mm
8	.614	15.60	.414	10.52	.383	9.73	.87	22.10
10	.773	19.63	.548	13.92	.513	13.03	1.03	26.16
14	.980	24.89	.781	19.84	.749	19.02	1.23	31.24
15	1.045	26.54	.843	21.41	.811	20.60	1.30	33.02
16	Contact Factory							

Lanyard Options

 Nylon Rope	-65° to +100°C., black, very flexible, very good abrasion resistance, good resistance to fuels, .120" (3mm) diameter
 Polyurethane Coated Wire Rope	Black polyurethane over stainless steel rope, -65° to +125°C., very flexible, excellent abrasion resistance, excellent resistance to fuels, .080" (2mm) diameter
 Fluoropolymer Jacketed Wire Rope	Translucent FEP jacket over stainless steel, -65° to +200°C., fair flexibility, good abrasion resistance, .100" diameter
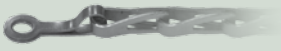 Sash Chain	Stainless steel, #8 chain, .240" (6mm)
 **Slip Knot (SK)** for Attaching Covers to Cable	65° to +100°C., black, very flexible, very good abrasion resistance, good resistance to fuels, .120" (3mm) diameter. Length includes .5" (13mm) diameter loop.

© 2016 Glenair, Inc • 1211 Air Way, Glendale, CA 91201 • 818-247-6000 • www.glenair.com • U.S. CAGE code 06324 • SuperSeal™ Catalog
Dimensions in Inches (millimeters) are subject to change without notice.

667-262 Receptacle Metal Protective Covers for Mighty Mouse Series 805



Receptacle Cover

Protect Connectors From Damage Machined aluminum or stainless steel protective covers have fluorosilicone gasket for a watertight fit.

Stainless Steel Fittings and Rings Choose small diameter eye fittings for panel attachment. Larger rings fit under the jam nut or over cable jackets. Split rings can be installed on fully assembled cables.

Polyurethane-Coated SST Wire Rope provide resistance and good flexibility. Or, choose a Fluoropolymer jacket for high temperature exposure.

Braided Nylon Rope provides excellent flexibility and good abrasion resistance, and can be ordered with slip knot fittings for easy installation on any size cable.

How To Order						
Sample Part Number	**667-262**	**-M**	**-G**	**10**	**04**	**-6**
Series (See Table I)	**667-262** = Receptacle Cover (see note 1)					
Shell Material / Finish	**M** = Aluminum/Electroless Nickel RoHS Compliant **NF** = Aluminum/Cadmium with Olive Drab Chromate **ZNU** = Aluminum/Zinc-Nickel with Black Chromate **MT** = Aluminun/Nickel-PTFE RoHS Compliant **Z1** = Stainless Steel/Passivated RoHS Compliant					
Attachment Type	**D** = Bead Chain, CRES, Passivate **F** = Wire Rope, Nylon Jacket **G** = Nylon Rope **H** = SST Wire Rope, Fluoropolymer Jacket **N** = No Attachment **R** = Wire Rope, PVC Jacket **S** = SST Sash Chain **SK** = Nylon Rope With Slip Knot **T** = SST Wire Rope, No Jacket **U** = SST Wire Rope, Polyurethane Jacket "SST" = Stainless Steel					
Shell Size	**10**, **18**, **19**, **21**					
Attachment Code (See Table II)	Small Ring = **01** thru **06** Large Ring = **18** thru **30**					
Attachment Length (inches)	Omit for attachment Type N (No Attachment) Example "-6" equals six inch length					

Table I: Cover Style



667-262
Receptacle Cover

NOTES

1. For plug covers contact factory
2. Material and Finish
   - Gasket: Fluorosilicone rubber
   - Wire, Hardware: Stainless steel, passivated

© 2016 Glenair, Inc • 1211 Air Way, Glendale, CA 91201 • 818-247-6000 • www.glenair.com • U.S. CAGE code 06324 • SuperSeal™ Catalog
Dimensions in Inches (millimeters) are subject to change without notice.

667-262 Receptacle Metal Protective Covers for Mighty Mouse Series 805

667-262 Cover Attachment to RPM Jam Nut Receptacle

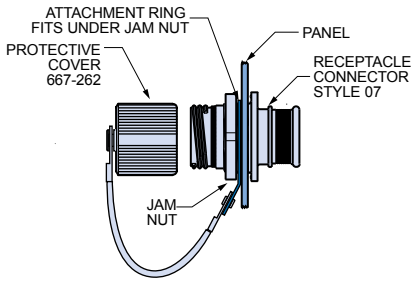

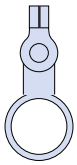

Solid Ring

Attchmt Code	Shell Size	Ring I.D. In. ± .010	Ring I.D. mm. ±0.25	Ring O.D. In. ± .015	Ring O.D. mm. ± 0.38
18	10	.695	17.65	.82	20.83
22	18	1.210	30.73	1.31	33.27
23	19	1.275	32.39	1.37	34.80
30	21	1.380	35.05	1.48	37.59

667-262 Cover Attachment to Panel

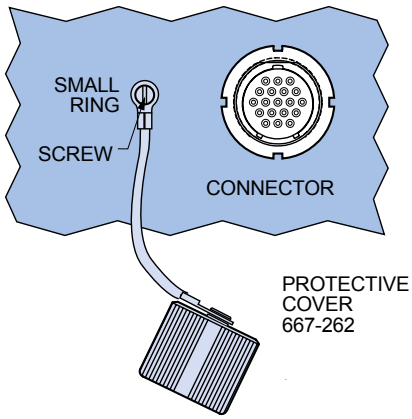

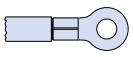

Small Ring for Attaching Receptacle Covers to a Panel with a Screw

Attchmt Code	Screw Size	Ring I.D. In. ±.005	Ring I.D. mm. ±0.13	Ring O.D. In. Max.	Ring O.D. mm. Max.
01	#4, M3	.126	3.20	.31	7.9
02	#6	.145	3.68	.31	7.9
04	#8, M4	.188	4.78	.31	7.9
06	#10	.197	5.00	.31	7.9

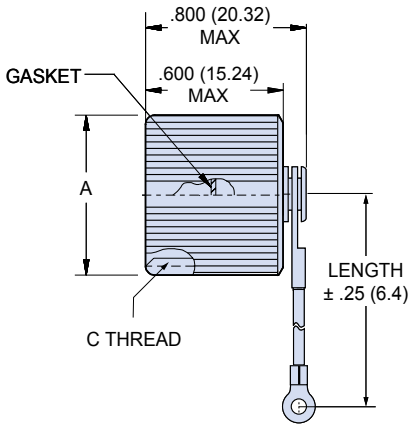

Dimensions

Shell Size	A In.	A mm.	B Thread	C Thread
10	.778	19.76	.6250-.1P-.3L-TS-2A	.6250-.1P-.3L-TS-2B
18	1.278	32.46	1.1250-.1P-.3L-TS-2A	1.1250-.1P-.3L-TS-2B
19	1.340	34.04	1.1870-.1P-.3L-TS-2A	1.1870-.1P-.3L-TS-2B
21	1.490	37.85	1.3125-.1P-.3L-TS-2A	1.3125-.1P-.3L-TS-2B

Lanyard Options

 Nylon Rope	-65° to +100°C., black, very flexible, very good abrasion resistance, good resistance to fuels, .120" (3mm) diameter
 Polyurethane Coated Wire Rope	Black polyurethane over stainless steel rope, -65° to +125°C., very flexible, excellent abrasion resistance, excellent resistance to fuels, .080" (2mm) diameter
 Fluoropolymer Jacketed Wire Rope	Translucent FEP jacket over stainless steel, -65° to +200°C., fair flexibility, good abrasion resistance, .100" diameter
 Sash Chain	Stainless steel, #8 chain, .240" (6mm)
 Slip Knot (SK) for Attaching Covers to Cable	65° to +100°C., black, very flexible, very good abrasion resistance, good resistance to fuels, .120" (3mm) diameter. Length includes .5" (13mm) diameter loop.

© 2016 Glenair, Inc • 1211 Air Way, Glendale, CA 91201 • 818-247-6000 • www.glenair.com • U.S. CAGE code 06324 • SuperSeal™ Catalog

Dimensions in Inches (millimeters) are subject to change without notice.

RJ45/USB SUPER SEAL™

Coming Soon SuperSeal™ RJ45 CAT 6A ETHERNET CONNECTORS



RJ45 Cat 6a MIL-DTL-38999 Series III Type Wall-Mount Receptacle and Plug

High performance, proven reliability environmental connectors housing RJ45 interfaces for mission-critical data transfer applications

- **Superior sealing—IP67 minimum in unmated condition—for complete system protection against harsh elements**
- **Advanced thru-coupler grounding for superior electrostatic discharge and EMC**
- **Crimp, solder-cup, PC tail, quadrax, and compliant pin contact variations**
- **Scoop proof, self-locking, triple-start threaded coupling design of MIL-DTL-38999 Series III type connectors**
- **RJ45 cordsets with multiple length options available**
- **Integrated banding platform options for easy cable termination and EMI/RFI shielding**
- **Optional spring loaded protective covers for sand, dust, and mechanical protection of junction boxes and switches**
- **RJ45 plug and/or jack interfaces**
- **High Data Transfer Rates: 10GBase**

SuperSeal™ MIL-DTL-38999 Type RJ45 Connector Selection Guide

	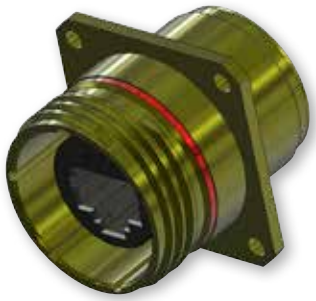		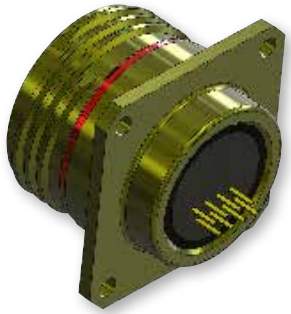
MIL-DTL-38999 Series III Type Plug Connectors with sealed RJ45 Plug (mated condition) Ethernet interfaces in a two piece coupler design. Easy field termination with Metal Gland backshell or shrink boot sealing options.	MIL-DTL-38999 Series III Type Receptacle Connectors with sealed RJ45 Jack-to-Jack Ethernet interfaces in a one piece coupler design. Metal Gland backshell and spring loaded protective covers available.	MIL-DTL-38999 Series III Type Receptacle Connectors with AS39029 crimp rear-release size #22D contacts	MIL-DTL-38999 Series III Type Receptacle Connectors with sealed RJ45 Jack interface and AS39029 rear-release crimp or solder cup #22D contacts. Size 22 Compliant Pin contacts, Quadrax Contacts or #22 PC Tail contacts also available.

© 2016 Glenair, Inc • 1211 Air Way, Glendale, CA 91201 • 818-247-6000 • www.glenair.com • U.S. CAGE code 06324 • SuperSeal™ Catalog
Dimensions in Inches (millimeters) are subject to change without notice.

Test Description	SuperSeal MIL-DTL-38999 Series III RJ45 Performance Requirements/Specifications	Procedure Per MIL-DTL-38999 and TIA/EIS-568-B.2
Contact Resistance	Connecting hardware shall conform to A.2; a thru c of TIA/EIA-568-B.2 per IEC 60512-2, Test Method 2A, millivolt level method (shall not exceed 0.025 ohms and 0.050 ohms during subsequent tests	TIA/EIA-568-B.2, Section A.2 IAW IEC 60512-2, Test method 2A
Insulation Resistance	Per IEC 60512-2, Test 3a, Method C, test voltage 500 VDC (Insulation Resistance minimum of 100 Ohm)	IAW IEC 60512-2, Test Method 2A
Mating Durability	500 to 1000 cycles (finish dependent) with no mechanical damage. Contact Resistance requirement as described above shall be met at 0.050 ohms after 100, 200 and 250 cycles (and 500 per finish). This shall be performed before Thermal Shock and Humidity/ Temperature cycling test and the additional 250 cycles shall be testing after completion in the same manner.	4.5.8 IAW TIA/EIA-568-B.2
Contact Retention	Individual contacts capable of withstanding at least 10 pounds axial load applied uniformly 1 lb/sec	IAW EIA-364-29
Vibration	Per MIL-DTL-38999 Series III Condition VI Letter J; Sine: 10 to 2,000 Hz each of three mutually perpendicular axis total of 36 hours (4 hours each ambient, -40ºC and +85ºC temperatures) Random: 43.9 rms g's random vibration 16 hours (8 hours longitudinal and perpendicular direction). No electrical discontinuity.	3.27 Sine 4.5.23.3 & 4.5.23.4 Random 4.5.23.1 IAW EIA-364-28
Shock	100 mA max with no discontinuities excess of 1 microsecond. Standard: Per EIA-364-27 – half sine wave @ 300 G. High Impact: Per MIL S 901, Grade A.	4.5 IAW EIA-364-27 IAW MIL S 901
Thermal Shock	Per IEC 60068-2-14 Test Number Nb. • Temperature range -40 - +85ºC ± 2ºC • Exposure Time: 30 min. • Number of Cycles: 100 • Test Group B contacts shall be inspected and contact resistance measured after 50 cycles and at completion of est. These specimens shall be used for humidity/thermal cycling testing.	TIA/EIA-568-B.2, A.7 IAW IEC 60068-2-14, Test Number Nb
Humidity/ Temperature Cycling	EIA-364-31 with exceptions b, d & e; EIA 364-32 Test Condition A, except steps 2 & 4 shall be 2 minutes max duration; Humidity/Temperature: TIA/EIA-568-B.2, A.8 per IEC 60068-2-38; Temperature for step 1 shall be -45 +0/-5ºC. • Temperature for step 3 shall be 85 +5/-0ºC Exposure Time: 30 min. • Number of Cycles: 100 No blistering, peeling or separation of the plating or other damage detrimental to operation of connector	4.5.11.1 or 4.5.11.2 4.5.13 IAW EIA-364-31,Method IV with temperature exceptions; IAW EIA-364-32, Test cond. A; IAW IEC 60068-2-14, Test Method Z/AD
Salt Spray	5% solution, 34º-36ºC. 48-1000 hours, depending on finish. Unmated connectors show no lifting of plated coating or exposure of basis material under 3X magnification which adversely affects performance.	4.5.13 IAW EIA-364-26
Water Immersion	1 Meter for 1 hour, Unmated	MIL-STD-810 method 512
EMI Shielding	Per IEC 60603-7, 1 MHz to 1000 MHz with effectiveness of 22 dB.	4.5.28 EIA-364-66
Fluid Resistance	Per EIA-364-10 unmated connector shall not experience any damage detrimental to performance after immersion in fluid.	4.5.30 IAW EIA-364-10

MIL-DTL-38999 Connector and Cable Assembly Material and Finish Codes

Code	Material	Finish	Finish Specification	Hrs. Salt Spray	Electrical Conductivity	Operating Temp. Range	RoHS Compliance
ME	Aluminum	Electroless Nickel	MIL-DTL-24308 Class K	96	Yes		Yes
MT	Aluminum	Nickel PTFE	SAE AMS2454	500	Yes	-65° to +175°C	Yes
NF	Aluminum	Cadmium, Olive Drab	SAE-AMS-QQ-P-416 Type II Class 2 over electroless nickel	500	Yes	-65 to +175°C	No
ZR	Aluminum	Zinc-Nickel, Black	ASTM B841 Grade 5 over electroless nickel	500	Yes	-65 to +175°C	Yes

MIL-DTL-38999 RJ45 Cat6a Electrical Specs for Plug & Receptacle	
Rating	Category 6a
Data rate	10GBase
Voltage rating	1000 Volts
Current rating	1.5 Amps (max)
Frequency	500 MHz (max)
Wiring	Straight through
Shield continuity	Continuous thru-coupler
Cable length	100 M (max)

Glenair®

For more information contact Glenair at **818-247-6000** or visit our website at **www.glenair.com**
U.S. CAGE code 06324

HDMI 2.0 CONNECTORS

MIL-DTL-38999 Series III Type Connectors

Product selection guide

N



233-360 E-2

SuperSeal™ HDMI 2.0 Type A Panel Mount Couplers with Accessory Threads

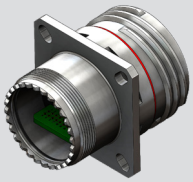

233-364 E-9

SuperSeal™ HDMI 2.0 Type A Panel Mount Couplers with Break-out Board

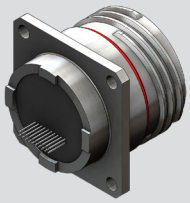

233-362 E-5

SuperSeal™ HDMI 2.0 Type A Panel Mount Couplers with PC Tails

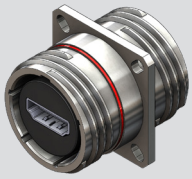

233-365 E-12

SuperSeal™ HDMI 2.0 Type A Panel Mount Feed-thru Couplers

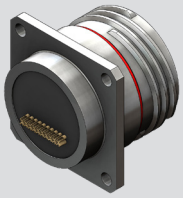

233-363 E-7

SuperSeal™ HDMI 2.0 Type A Panel Mount Couplers with Solder Cups



233-368 E-14

SuperSeal™ HDMI 2.0 Type A Plug Adapter

© 2016 Glenair, Inc • 1211 Air Way, Glendale, CA 91201 • 818-247-6000 • www.glenair.com • U.S. CAGE code 06324 • SuperSeal Catalog
Dimensions in Inches (millimeters) are subject to change without notice.



SERIES 23

SuperSeal™

HDMI 2.0 Ruggedized solutions



SuperSeal is part of the SuperNine family of 38999 Type connectors featuring improved sealing and grounding capabilities to house commercial HDMI 2.0 interfaces. All superseal connectors are IP68 rated in the mated condition and IP67 rated in the unmated. HDMI 2.0 is the defacto standard for transmission of high-definition video signals from an HDMI-source to compatible monitors or video projectors. A ruggedized solution for C4ISR mobile field applications, SuperSeal HDMI 2.0 connectors provide military grade connector performance including metal-to-metal grounding, polarization keying, and non-corrosive conductive material and finish options. The HDMI 2.0 protocol supports audio/video data transmission rate of 18.0 Gbit/s and a maximum data rate of up to 14.4 Gbit/s and allows for simple plug-and-play connectivity and *hot-swappable* addition of external peripherals without restarting systems.

- **Superior sealing—IP67 unmated—for complete system protection against water, sand and dust**
- **Highly durable SuperSeal™ insert design, provides enhanced operating temperature, increased life-cycle, and rugged vibration and shock performance**
- **Crimp, solder-cup, PC tail, break-out board, feed-thru and cable assembly designs available**

© 2016 Glenair, Inc • 1211 Air Way, Glendale, CA 91201 • 818-247-6000 • www.glenair.com • U.S. CAGE code 06324 • Catalog Title
Dimensions in Inches (millimeters) are subject to change without notice.

MIL-DTL-38999 Series III Type Connectors

HDMI 2.0 Performance Specifications

HDMI 2.0 Performance Specifications	
Property	**MIL-DTL-38999 Series III Type**
Material and Finish	
Shell/Coupling and Plating	Complete list of finishes is available in Section A of the SuperSeal catalog
Contacts	Copper alloy/gold plate
HDMI Insulator	LCP
Grommet, Peripheral Seal, Interfacial Seal, O-ring	Blended fluorosilicone/silicone elastomer, 30% silicone per ZZ-R-765, 70% fluorosilicone per MIL-R-25988
Shell Size	17 Consult factory for other shell size options
Electrical Specifications	
Data Rate	Up to 18 Gbps
Power Usage	+5.0 volts
Current Rating	0.3 Amps min.
D.W.V.	300 VAC
I.R.	100 Mega Ohms min
Cabling Length	10 Meters Max (recommended)
Shielding	Continuous through coupler or continuous coupler to shell
Environmental/Mechanical Performance	
Sealing	IP67 unmated IP68 mated
Outgassing	**Mod Code 186S** meets outgassing requirements per ASTM E 595 and meets NASA level 3 screening for standard reliability **Mod Code 928** meets outgassing requirements per UL 94 V-0
Operating Temperature	-20°C to +85°C
Backshell Interface	MIL-DTL-38999 Designator H
Mating System	Triple-start stub ACME
Mating Cycles	500

HDMI 2.0 CONNECTOR ORIENTATION OPTIONS

Receptacle

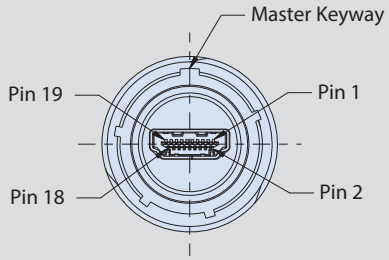

Horizontal

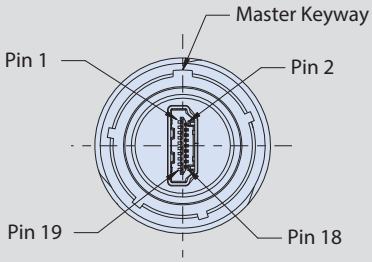

Vertical

Plug

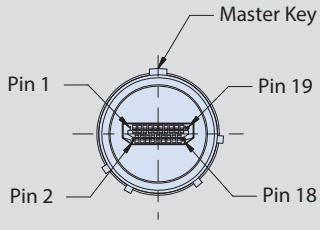

Horizontal

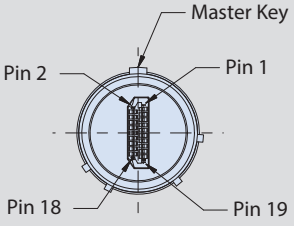

Vertical

© 2016 Glenair, Inc • 1211 Air Way, Glendale, CA 91201 • 818-247-6000 • www.glenair.com • U.S. CAGE code 06324 • SuperSeal Catalog
Dimensions in Inches (millimeters) are subject to change without notice.

SUPER SEAL™

HDMI 2.0 CONNECTORS

MIL-DTL-38999 Series III Type Connectors

233-360 Panel mount couplers with accessory threads

Glenair®



Part Number Development							
Sample Part Number	**233-360**	**NF**	**00**	**-17**	**N**	**H**	
Basic Number	**233-360**						
Finish	See Material and Finish table						
Connector Style[1]	See Connector Style table						
Shell Size	**17**						
Alternate Key Position[1]	**A**, **B**, **C**, **D**, **E**, **N** = Normal per MIL-DTL-38999						
HDMI Orientation	**H** = Horizontal **V** = Vertical						
Shrink Boot	**T** = Part No. 770-028 (Omit for None)						

Material and Finish	
NF	Aluminum/Cadmium, Olive Drab
ME	Aluminum/Electroless Nickel
MT	Alumimun/Nickel PTFE
ZR	Aluminum/Black Zinc-Nickel
AB	Marine Bronze
XM	Composite/Electroless Nickel

Additional material / finish options available consult factory

Connector Style	
00	Wall mount receptacle with slotted holes
D0	Wall mount receptacle with thru-holes
CM	Wall mount receptacle with metric clinch nuts
CS	Wall mount receptacle with standard clinch nuts
07	Rear panel mount, jam nut receptacle
05	Inline receptacle

HDMI 2 FEMALE ORIENTATION OPTIONS

(PARTIAL FRONT VIEWS SHOWN)

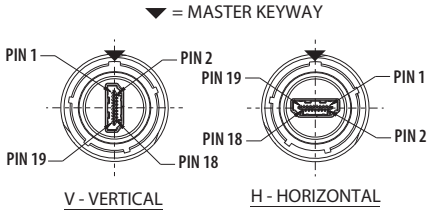

All external dimensions, features, etc. compliant with D38999/20, /24, &/26. Consult factory for additional information.

00 - WALL MOUNT RECEPTACLE WITH SLOTTED THRU-HOLES

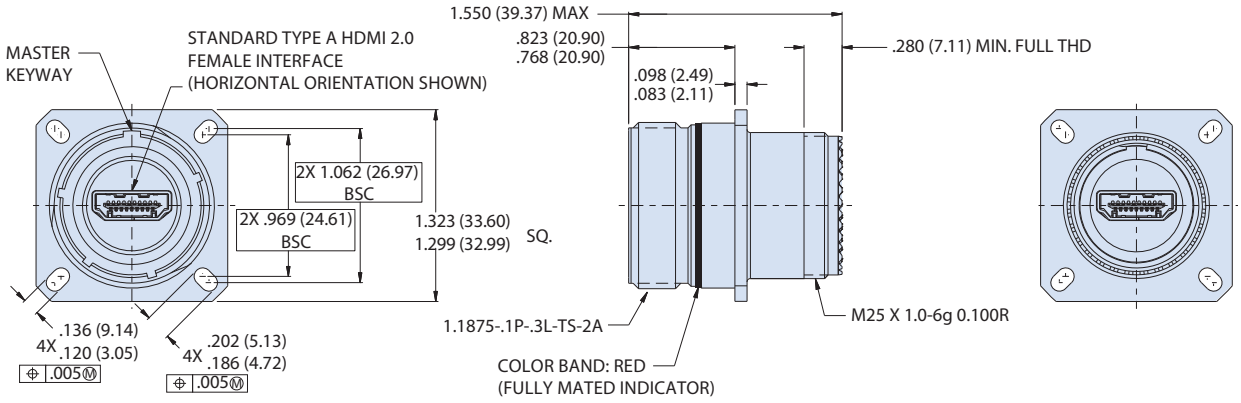

NOTES

1. See Section A for alternate key/keyway positions and panel cutout dimensions
2. Meets IP67 in unmated condition, IP68 mated
3. HDMI Type A female port, front and back
4. Front panel mount only
5. Material and Finish
   - Shell, jam nut: see material finish table
   - Seals: silicone based elastomer
   - Hardware: stainless steel/passivated
6. HDMI:
   - Housing: thermoplastic/NA
   - Shell: copper alloy nickel plated
   - Terminal: copper alloy/gold plated
7. HDMI performance: design meets HDMI 2.0 protocol requirement including 18Gbps of bandwidth and suppots 4K resolution and 60Hz

© 2016 Glenair, Inc • 1211 Air Way, Glendale, CA 91201 • 818-247-6000 • www.glenair.com • U.S. CAGE code 06324 • Catalog Title
Dimensions in Inches (millimeters) are subject to change without notice.

DO - WALL MOUNT RECEPTACLE WITH ROUND THRU-HOLES

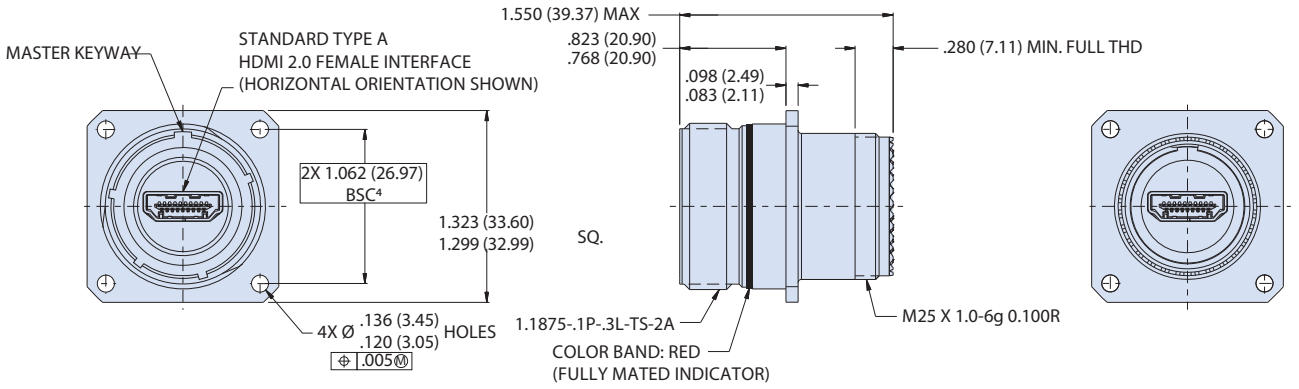

CM - WALL MOUNT RECEPTACLE WITH METRIC CLINCH NUTS

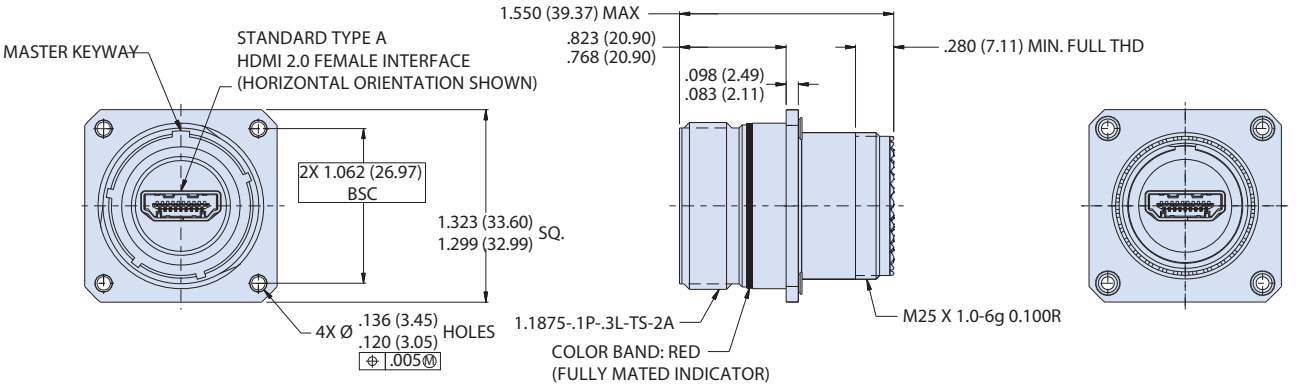

CS - WALL MOUNT RECEPTACLE WITH STANDARD CLINCH NUTS

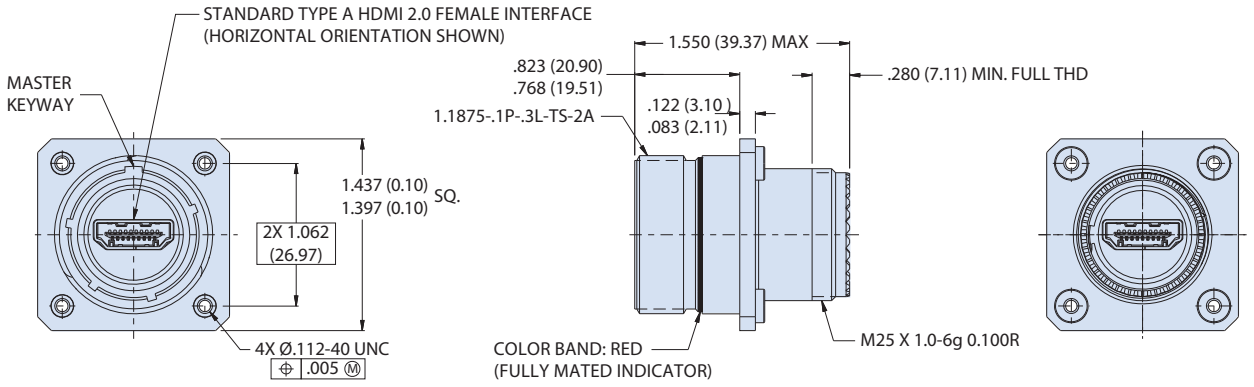

© 2016 Glenair, Inc • 1211 Air Way, Glendale, CA 91201 • 818-247-6000 • www.glenair.com • U.S. CAGE code 06324 • SuperSeal Catalog
Dimensions in Inches (millimeters) are subject to change without notice.

N

07 - REAR PANEL MOUNT, JAM NUT RECEPTACLE

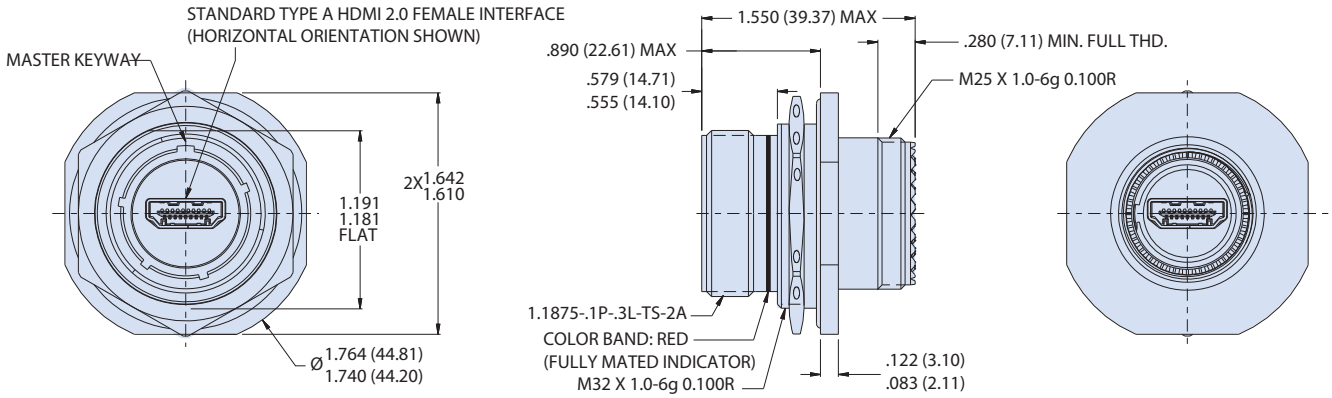

05 - CABLE RECEPTACLE

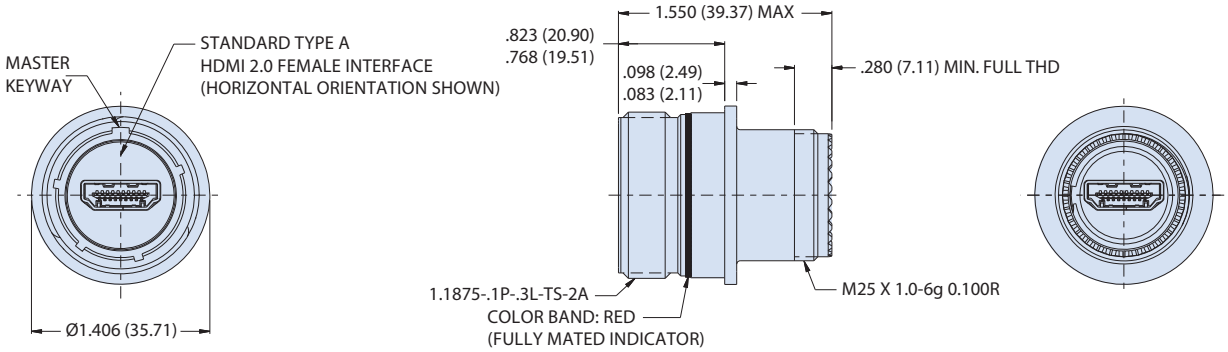

© 2016 Glenair, Inc • 1211 Air Way, Glendale, CA 91201 • 818-247-6000 • www.glenair.com • U.S. CAGE code 06324 • Catalog Title
Dimensions in Inches (millimeters) are subject to change without notice.

MIL-DTL-38999 Series III Type Connectors

233-362 Panel mount receptacles with PC tails

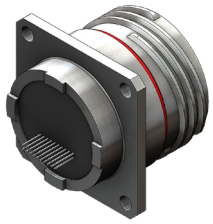

Part Number Development							
Sample Part Number	**233-362**	**NF**	**00**	**-17**	**N**	**H**	
Basic Number	**233-362**						
Finish	See Material and Finish table						
Connector Style[1]	See Connector Style table						
Shell Size	**17**						
Alternate Key Position[1]	**A**, **B**, **C**, **D**, **E**, **N** = Normal per MIL-DTL-38999						
HDMI Orientation	**H** = Horizontal **V** = Vertical						
Shrink Boot	**T** = Part No. 770-028 (Omit for None)						

HDMI 2 FEMALE ORIENTATION OPTIONS

PCB LAYOUT (SOLDER SIDE)

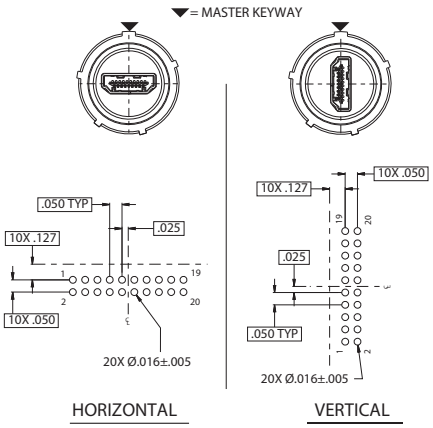

Material and Finish	
NF	Aluminum/Cadmium, Olive Drab
ME	Aluminum/Electroless Nickel
MT	Alumimun/Nickel PTFE
ZR	Aluminum/Black Zinc-Nickel
AB	Marine Bronze
XM	Composite/Electroless Nickel

Additional material / finish options available consult factory

Connector Style	
00	Wall mount receptacle with slotted holes
D0	Wall mount receptacle with thru-holes
CM	Wall mount receptacle with metric clinch nuts
07	Rear panel mount, jam nut receptacle

All external dimensions, features, etc. compliant with D38999/20, /24, &/26. Consult factory for additional information.

00 - WALL MOUNT RECEPTACLE WITH SLOTTED THRU-HOLES

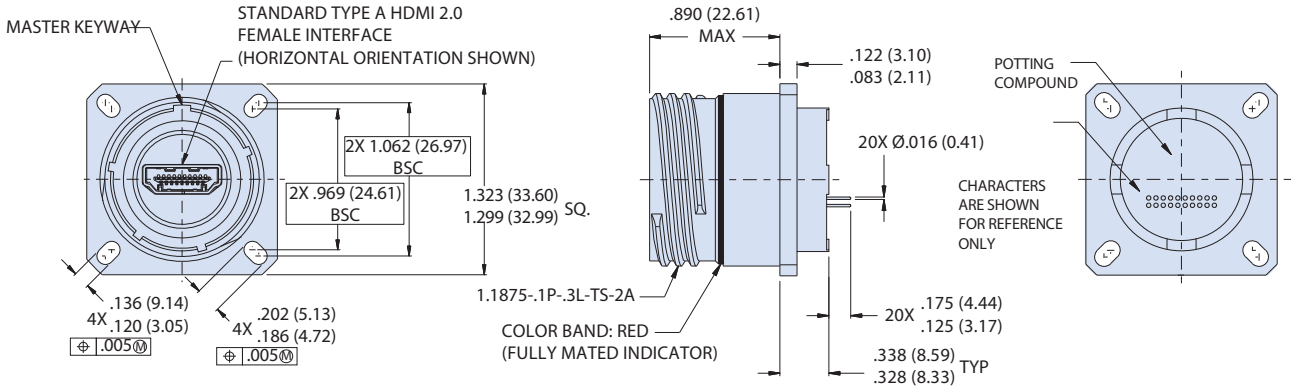

NOTES

1. See Section A for alternate key/keyway positions and panel cutout dimensions
2. Meets IP67 in unmated condition, IP68 mated
3. HDMI Type A female port, front and back
4. Front panel mount only
5. Material and Finish
   - Shell, jam nut: see material/finish table
   - Seals: silicone based elastomer
   - Hardware: stainless steel/passivated
6. HDMI:
   - Housing: thermoplastic/NA
   - Shell: copper alloy nickel plated
   - Terminal: copper alloy/gold plated
7. HDMI performance: design meets HDMI 2.0 protocol requirement including 18Gbps of bandwidth and suppots 4K resolution and 60Hz

© 2016 Glenair, Inc • 1211 Air Way, Glendale, CA 91201 • 818-247-6000 • www.glenair.com • U.S. CAGE code 06324 • Catalog Title
Dimensions in Inches (millimeters) are subject to change without notice.

N

DO - WALL MOUNT RECEPTACLE WITH ROUND THRU-HOLES

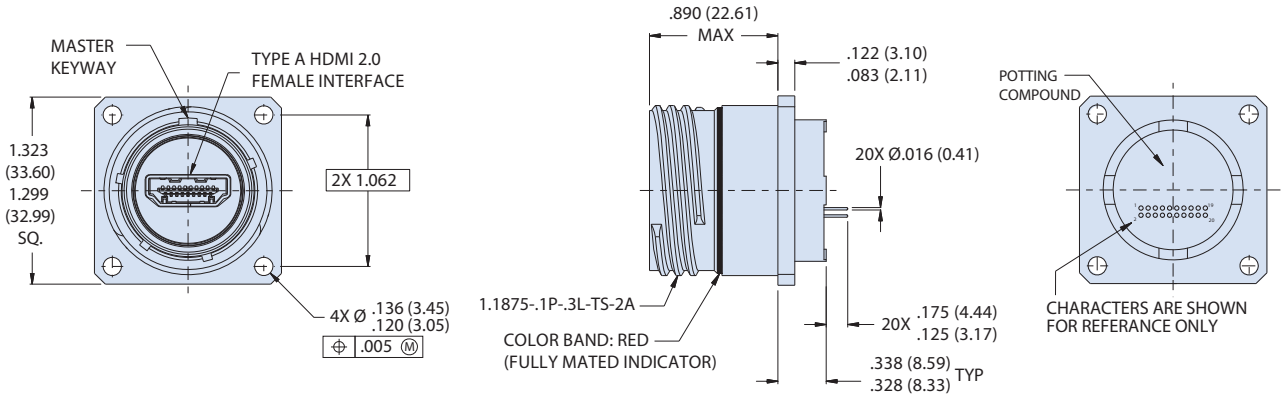

CM - WALL MOUNT RECEPTACLE WITH METRIC CLINCH NUTS

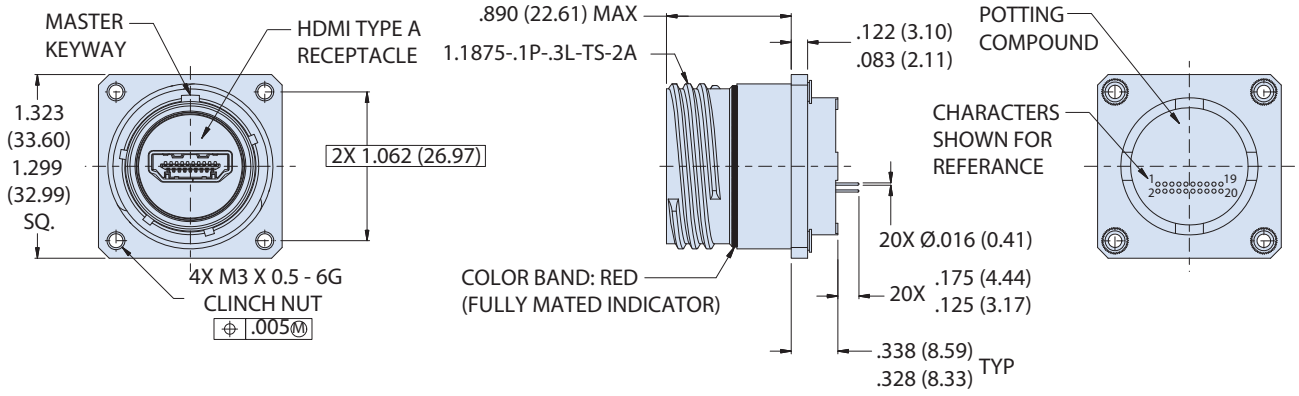

07 - JAM-NUT MOUNT RECEPTACLE

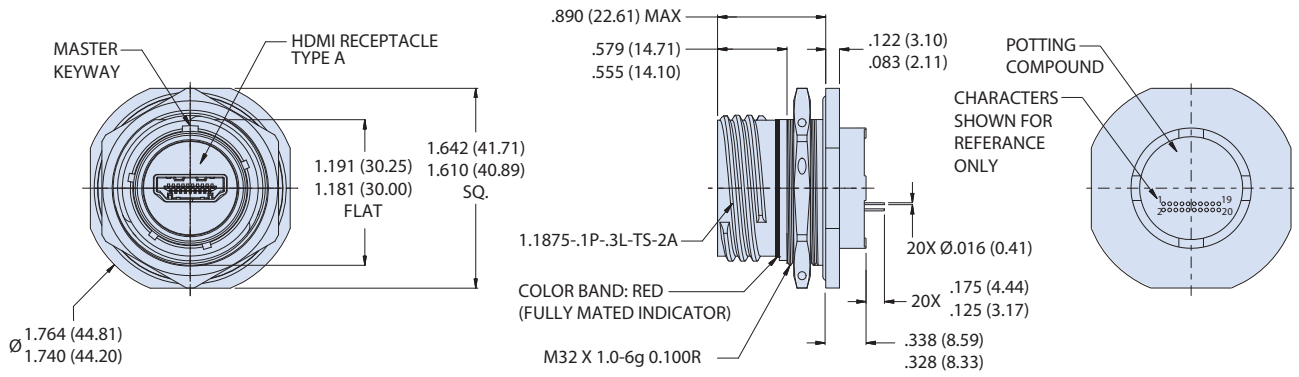

© 2016 Glenair, Inc • 1211 Air Way, Glendale, CA 91201 • 818-247-6000 • www.glenair.com • U.S. CAGE code 06324 • Catalog Title
Dimensions in Inches (millimeters) are subject to change without notice.

MIL-DTL-38999 Series III Type Connectors

233-363 Panel mount connectors with solder cups

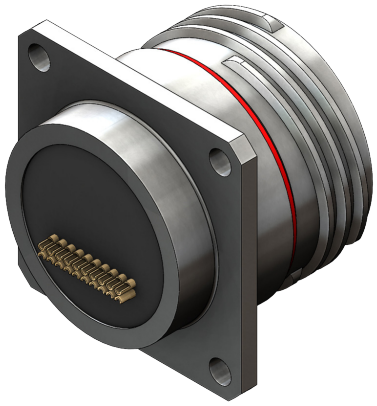

Part Number Development						
Sample Part Number	**233-363**	**NF**	**00**	**-17**	**N**	**H**
Basic Number	**233-363**					
Finish	See Material and Finish table					
Connector Style[1]	See Connector Style table					
Shell Size	**17**					
Alternate Key Position[1]	**A**, **B**, **C**, **D**, **E**, **N** = Normal per MIL-DTL-38999					
HDMI Orientation	**H** = Horizontal **V** = Vertical					

Material and Finish	
NF	Aluminum/Cadmium, Olive Drab
ME	Aluminum/Electroless Nickel
MT	Alumimun/Nickel PTFE
ZR	Aluminum/Black Zinc-Nickel
AB	Marine Bronze
XM	Composite/Electroless Nickel

Additional material / finish options available consult factory

Connector Style	
00	Wall mount receptacle with slotted holes
D0	Wall mount receptacle with thru-holes
CM	Wall mount receptacle with metric clinch nuts
07	Rear panel mount, jam nut receptacle

All external dimensions, features, etc. compliant with D38999/20, /24, &/26. Consult factory for additional information.

HDMI 2 FEMALE ORIENTATION OPTIONS

(PARTIAL FRONT VIEWS SHOWN)

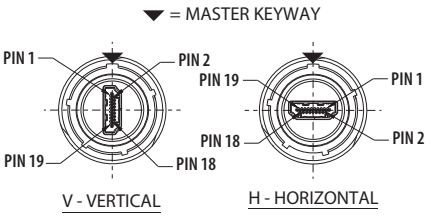

00 - WALL MOUNT RECEPTACLE WITH SLOTTED THRU-HOLES

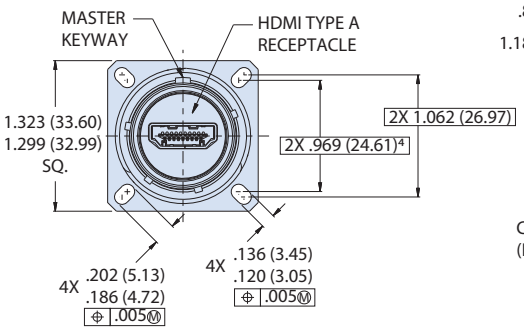

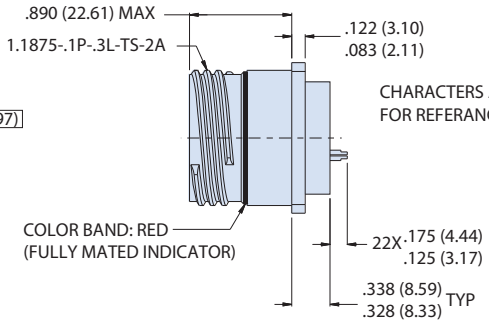

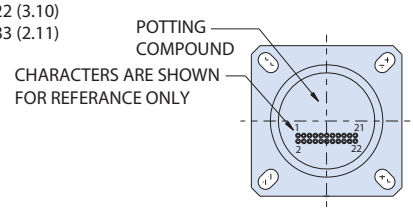

NOTES

1. See Section A for alternate key/keyway positions and panel cutout dimensions
2. Meets IP67 in unmated condition, IP68 mated
3. HDMI Type A female port, front and back
4. Front panel mount only
5. Material and Finish
   - Shell, jam nut: see material finish table
   - Seals: silicone based elastomer
   - Hardware: stainless steel/passivated
6. HDMI:
   - Housing: thermoplastic/NA
   - Shell: copper alloy nickel plated
   - Terminal: copper alloy/gold plated
7. HDMI performance: design meets HDMI 2.0 protocol requirement including 18Gbps of bandwidth and suppots 4K resolution and 60Hz

© 2016 Glenair, Inc • 1211 Air Way, Glendale, CA 91201 • 818-247-6000 • www.glenair.com • U.S. CAGE code 06324 • SuperSeal Catalog
Dimensions in Inches (millimeters) are subject to change without notice.

Rev 11.17.23

N

DO - WALL MOUNT RECEPTACLE WITH ROUND THRU-HOLES

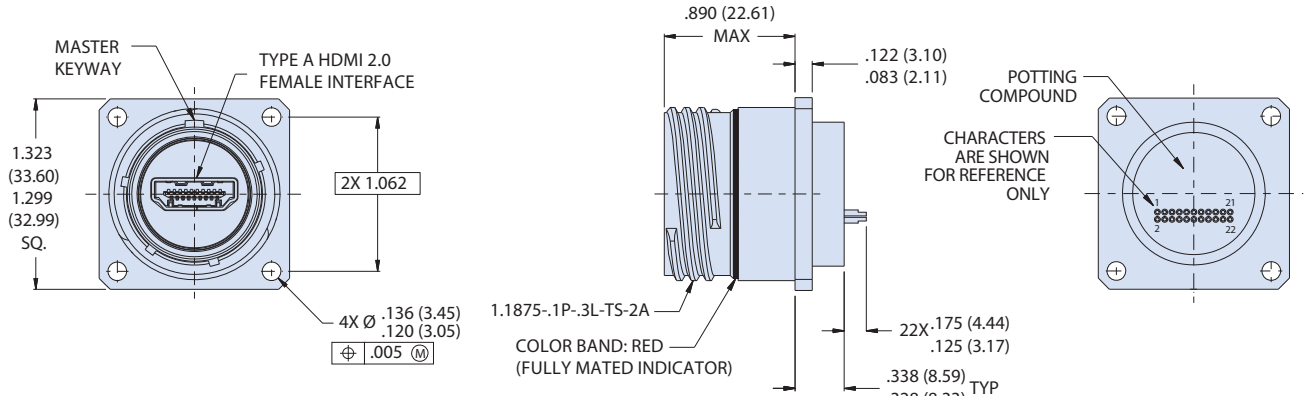

CM - WALL MOUNT RECEPTACLE WITH METRIC CLINCH NUTS

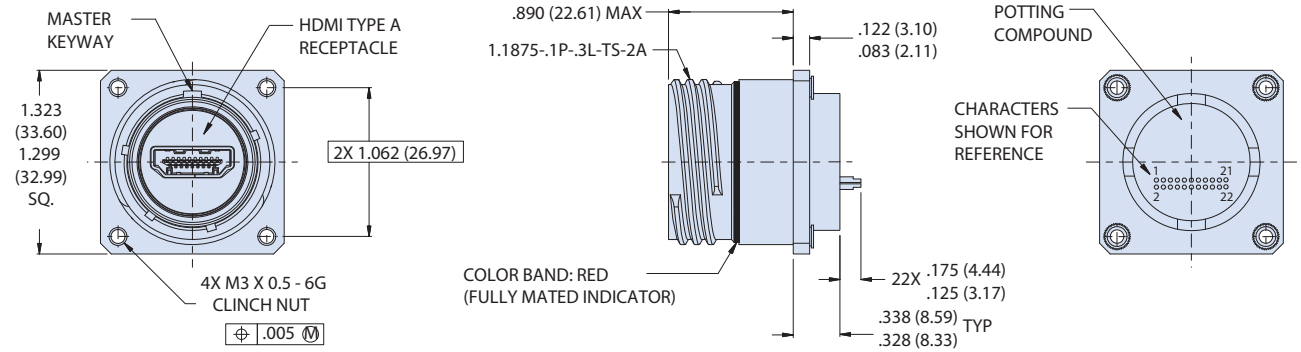

07 - JAM-NUT MOUNT RECEPTACLE

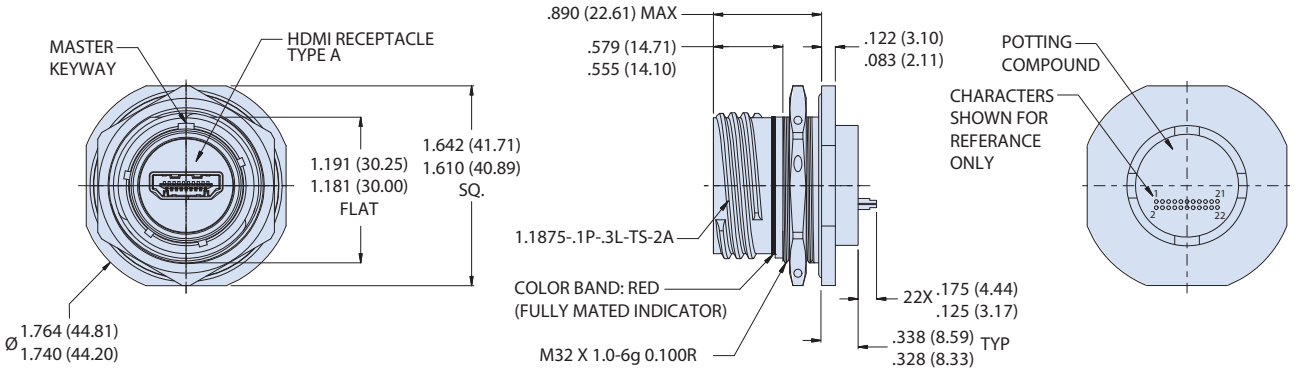

© 2016 Glenair, Inc • 1211 Air Way, Glendale, CA 91201 • 818-247-6000 • www.glenair.com • U.S. CAGE code 06324 • Catalog Title
Dimensions in Inches (millimeters) are subject to change without notice.

MIL-DTL-38999 Series III Type Connectors

233-364 Panel mount receptacles with break-out board

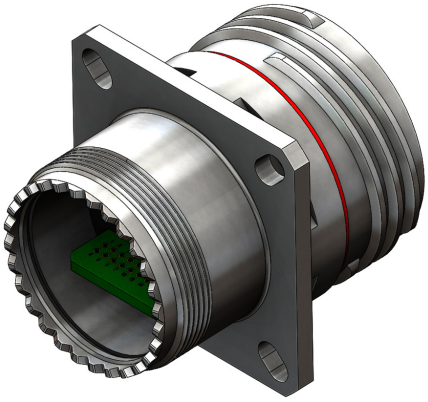

Part Number Development							
Sample Part Number	**233-364**	**NF**	**00**	**-17**	**N**	**H**	
Basic Number	**233-364**						
Finish	See Material and Finish table						
Connector Style[1]	See Connector Style table						
Shell Size	**17**						
Alternate Key Position[1]	**A**, **B**, **C**, **D**, **E**, **N** = Normal per MIL-DTL-38999						
HDMI Orientation	**H** = Horizontal **V** = Vertical						
Shrink Boot	**T** = Part No. 770-028 (Omit for None)						

Material and Finish	
NF	Aluminum/Cadmium, Olive Drab
ME	Aluminum/Electroless Nickel
MT	Alumimun/Nickel PTFE
ZR	Aluminum/Black Zinc-Nickel
AB	Marine Bronze
XM	Composite/Electroless Nickel

Additional material / finish options available consult factory

Connector Style	
00	Wall mount receptacle with slotted holes
D0	Wall mount receptacle with thru-holes
CM	Wall mount receptacle with metric clinch nuts
CS	Wall mount receptacle with standard clinch nuts
07	Rear panel mount, jam nut receptacle
05	Inline receptacle

HDMI 2 FEMALE ORIENTATION OPTIONS

(PARTIAL FRONT VIEWS SHOWN)

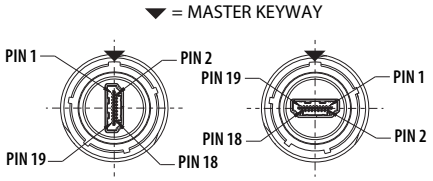

All external dimensions, features, etc. compliant with D38999/20, /24, &/26. Consult factory for additional information.

00 - WALL MOUNT RECEPTACLE WITH SLOTTED THRU-HOLES

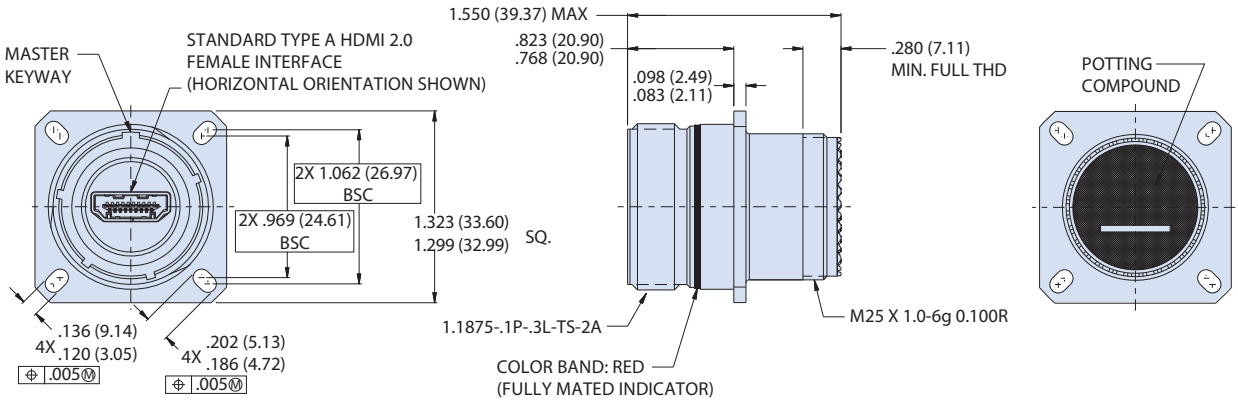

NOTES

1. See Section A for alternate key/keyway positions and panel cutout dimensions
2. Meets IP67 in unmated condition, IP68 mated
3. HDMI Type A female port, front and back
4. Front panel mount only
5. Material and Finish
   - Shell, jam nut: see material finish table
   - Seals: silicone based elastomer
   - Hardware: stainless steel/passivated
6. HDMI:
   - Housing: thermoplastic/NA
   - Shell: copper alloy nickel plated
   - Terminal: copper alloy/gold plated
7. HDMI performance: design meets HDMI 2.0 protocol requirement including 18Gbps of bandwidth and suppots 4K resolution and 60Hz

© 2016 Glenair, Inc • 1211 Air Way, Glendale, CA 91201 • 818-247-6000 • www.glenair.com • U.S. CAGE code 06324 • Catalog Title
Dimensions in Inches (millimeters) are subject to change without notice.

N

DO - WALL MOUNT RECEPTACLE WITH ROUND THRU-HOLES

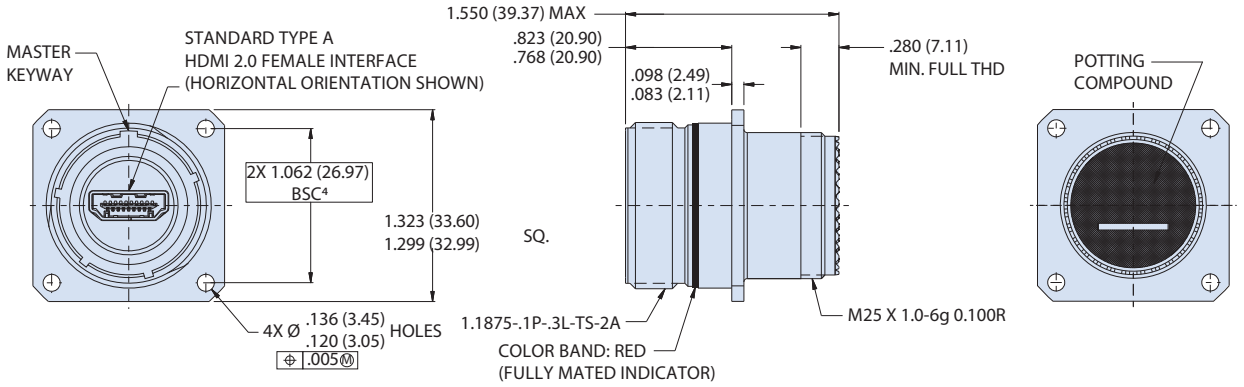

CM - WALL MOUNT RECEPTACLE WITH METRIC CLINCH NUTS

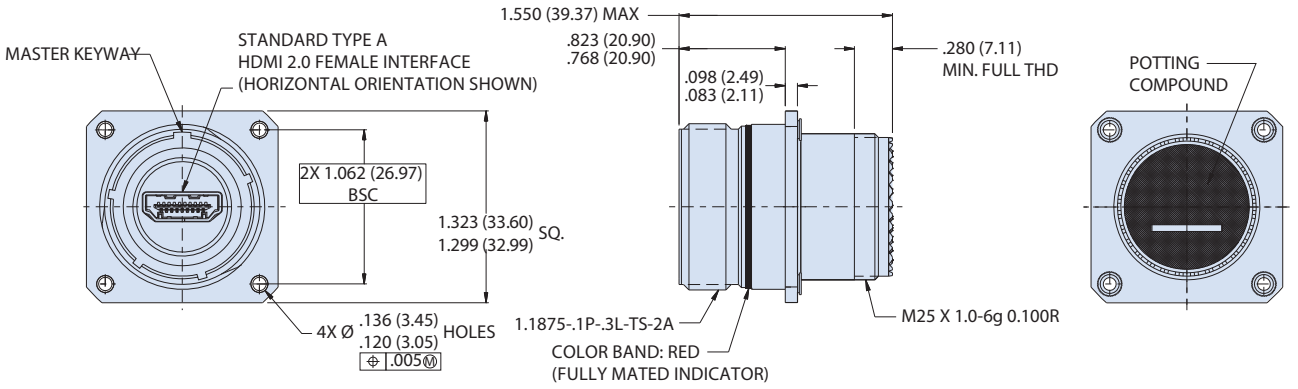

CS - WALL MOUNT RECEPTACLE WITH STANDARD CLINCH NUTS

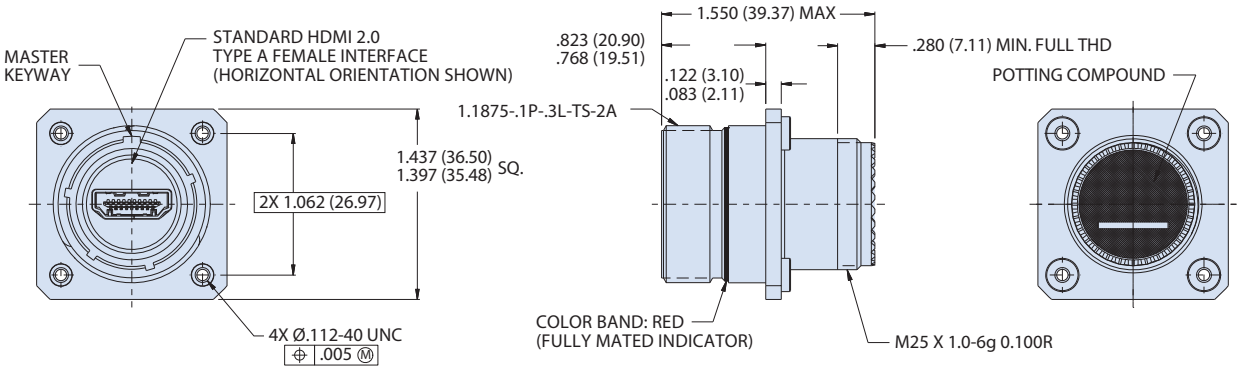

© 2016 Glenair, Inc • 1211 Air Way, Glendale, CA 91201 • 818-247-6000 • www.glenair.com • U.S. CAGE code 06324 • Catalog Title
Dimensions in Inches (millimeters) are subject to change without notice.

07 - REAR PANEL MOUNT, JAM NUT RECEPTACLE

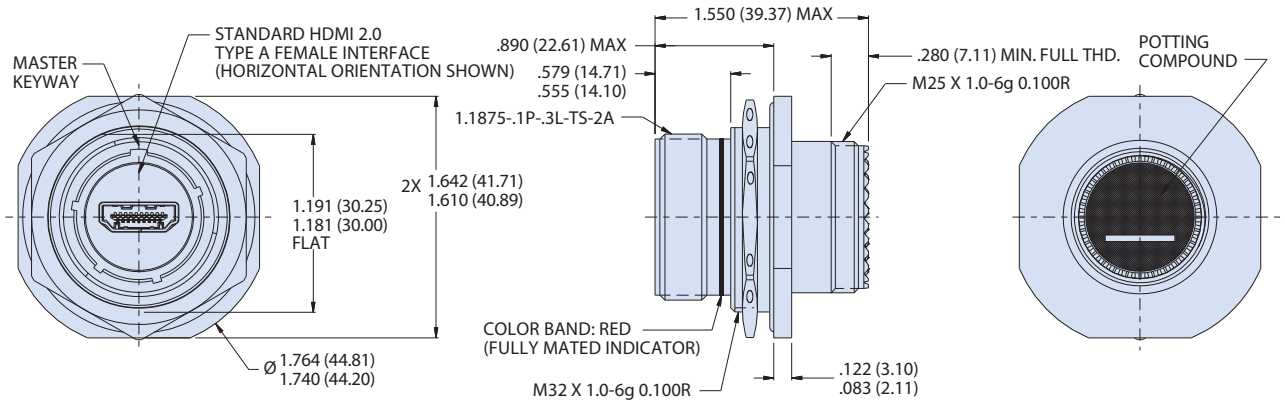

05 - CABLE RECEPTACLE

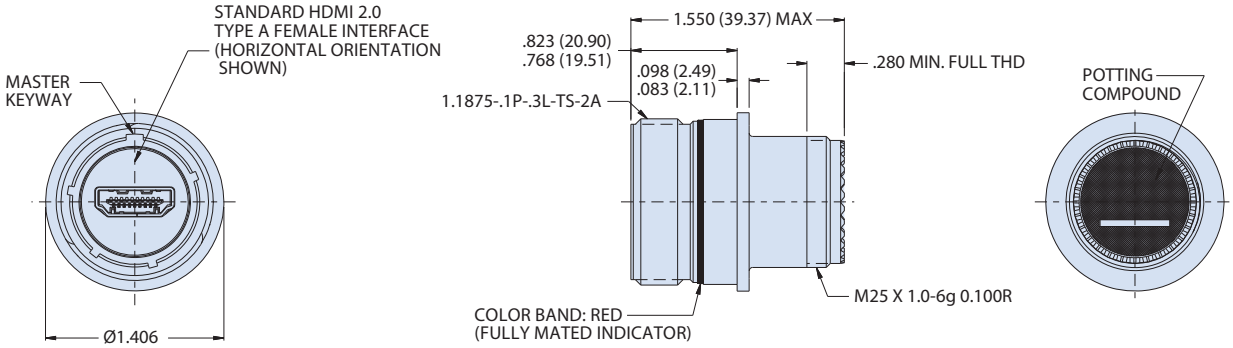

HDMI 2.0 CONNECTORS
MIL-DTL-38999 Series III Type Connectors
233-368 Plug, accepts HDMI Plug



Part Number Development							
Sample Part Number	**233-368**	**NF**	**G6**	**A**	**17**	**N**	**H**
Basic Number	**233-368**						
Finish	See Material and Finish table						
Connector Style[1]	**G6** = Plug						
Overmold Style	**A**, **B**, **C**						
Shell Size	**17**						
Alternate Key Position[1]	**A**, **B**, **C**, **D**, **E**, **N** = Normal per MIL-DTL-38999						
HDMI Orientation	**H** = Horizaontal **V** = Vertical						

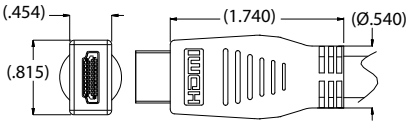

OVERMOLD BOOT STYLE: C

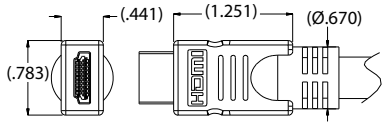

OVERMOLD BOOT STYLE: B

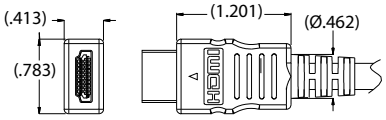

OVERMOLD BOOT STYLE: A

Material and Finish	
NF	Aluminum/Cadmium, Olive Drab (500 hour salt spray)
ME	Aluminum/Electroless Nickel
MT	Alumimun/Nickel PTFE
ZR	Aluminum/Black Zinc-Nickel (Tri-valent CR)
AB	Marine Bronze
XM	Composite/Electroless Nickel

Additional material / finish options available consult factory

All external dimensions, features, etc. compliant with D38999/20, /24, &/26. Consult factory for additional information.

HDMI 2 FEMALE ORIENTATION OPTIONS
(PARTIAL FRONT VIEWS SHOWN)

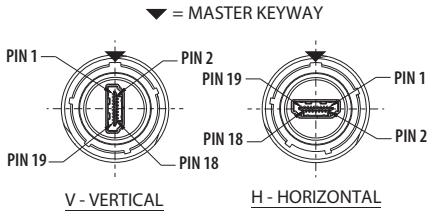

V - VERTICAL H - HORIZONTAL

G6 - PLUG

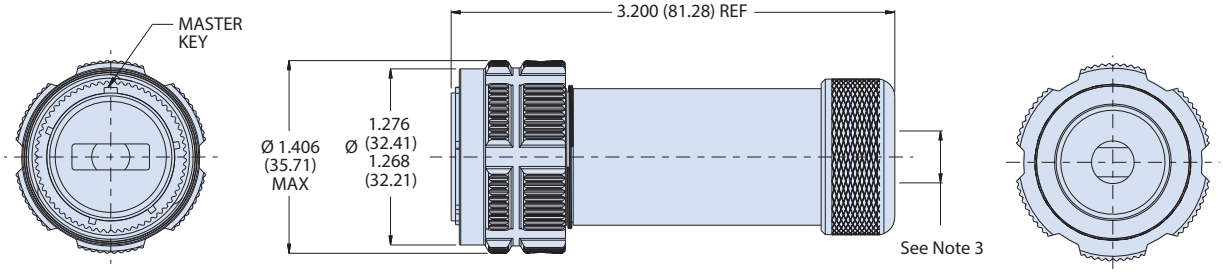

NOTES

1. See Section A for alternate key/keyway positions and panel cutout dimensions
2. Meets IP67 in unmated condition, IP68 mated
3. Design accommodates cable outside diameter .280 (7.112) nominal
4. Accommodates HDMI patch cords with standard plug interface
5. Material and Finish
   - Shell, jam nut: see material finish table
   - Seals: silicone based elastomer
   - Hardware: stainless steel/passivated
6. HDMI:
   - Housing: thermoplastic/NA
   - Shell: copper alloy nickel plated
   - Terminal: copper alloy/gold plated

© 2016 Glenair, Inc • 1211 Air Way, Glendale, CA 91201 • 818-247-6000 • www.glenair.com • U.S. CAGE code 06324 • Catalog Title
Dimensions in Inches (millimeters) are subject to change without notice.

N

Part Number Development							
Sample Part Number	**2330-0455**	**M**	**07**	**-17**	**N**	**H**	**-X**
Series / Basic Part No.	**2330-0455**						
P1 Material/Finish	**NF** = Aluminum/cadmium olive drab **ME** = Aluminum/electroless nickel **MT** = Aluminum/nickel PTFE **ZR** = Aluminum/zinc-nickel						
P1 Connector Style	**00** = Wall mount receptacle with slotted holes **D0** = Wall mount receptacle with round holes **07** = Jam-nut receptacle **G6** = Plug						
Shell Size	**17**						
Alternate Polarization	**A**, **B**, **C**, **D**, **E**, **N** = Normal; Per MIL-DTL-38999						
HDMI Orientation	**H** = Horizontal **V** = Vertical						
Overall Length	Provided in 1 foot increments; 01 - 1.0 ft						

00 - Wall Mount Receptacle With Slotted Holes

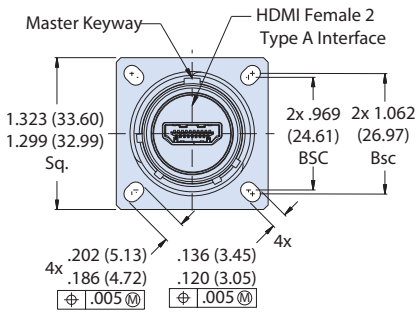

(Horizontal Orientation Shown)

D0 - Wall Mount Receptacle With Round Holes

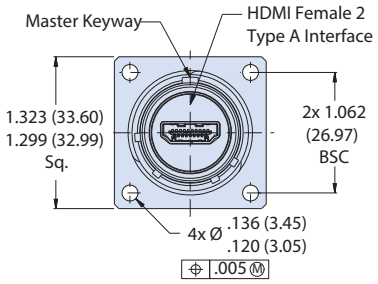

(Horizontal Orientation Shown)

07 - Jam Nut Receptacle

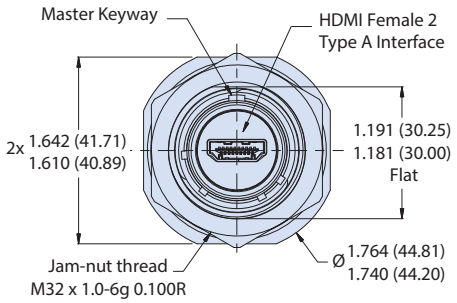

(Horizontal Orientation Shown)

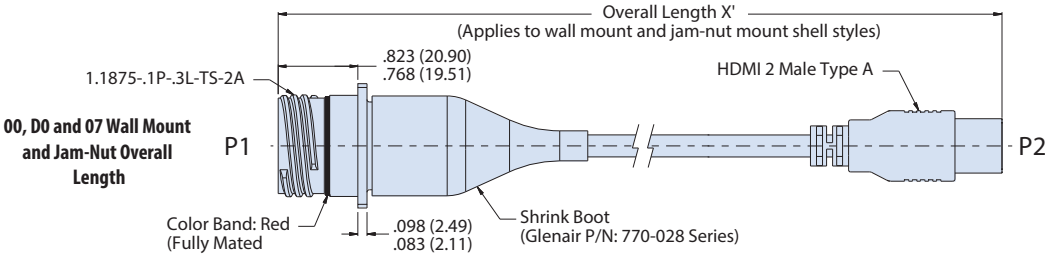

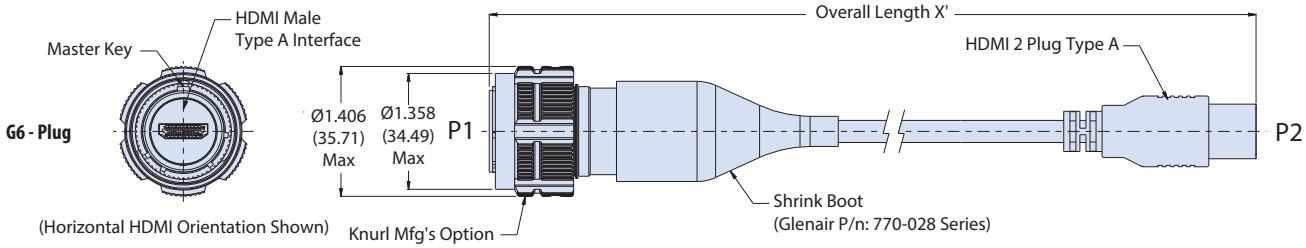

SuperNine® Datalink connectors

2330-0455 Cable assembly with HDMI 2

MIL-DTL-38999 Series III

Recommended Mounting Holes & Cut Outs

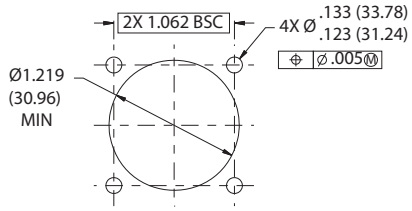

Back Panel Wall Mount Receptacle

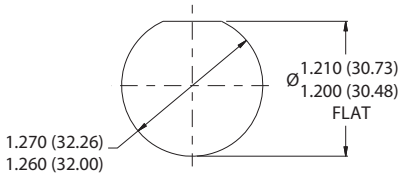

Jam Nut Receptacle

HDMI 2, Connector Pin Assignments			
Pin	Signal	Pin	Signal
1	TMDS DATA2+	11	TMDS CLOCK SHIELD
2	TMDS DATA2 SHIELD	12	TMDS CLOCK-
3	TMDS DATA2-	13	CEC
4	TMDS DATA1+	14	UTILITY
5	TMDS DATA1 SHIELD	15	SCL
6	TMDS DATA1-	16	SDA
7	TMDS DATA0+	17	DDC/CEC GROUND
8	TMDS DATA0 SHIELD	18	+5V POWER
9	TMDS DATA0-	19	HOT PLUG DETECT
10	TMDS CLOCK+		

NOTES

1. Material/finish
   - Shell, jam-nut, barrel: see part number development
   - Insulators: high grade rigid dielectric/N.A.
   - Contacts: copper alloy, gold plated
   - Seals: silicone based elastomer
   - HDMI (shell/contacts): copper alloy
   - Dielectric: thermoplastic PA9T UL94V-0
   - Hardware: stainless steel/passivated
2. HDMI specifications:
   Performance:
   - HDMI 2
   Electrical:
   - Current rating: 0.5 amps min
   - DWV: 300 Vac
   - I.R.: 100 Meg Ohms min.
   - Operating temperature range: -20°C to +85°C
3. Connector interface (P1) per MIL-DTL-38999, Series III, Shell size 17
4. Connector front interface with HDMI Type A male is designed to mate with HDMI receptacle patch cord or Glenair HDMI receptacle connector 2330-0441

   Connector front interface with HDMI Type A female is designed to mate with HDMI male patch cord

HDMI 2 ORIENTATION OPTIONS (PARTIAL FRONT VIEWS SHOWN)

Receptacle

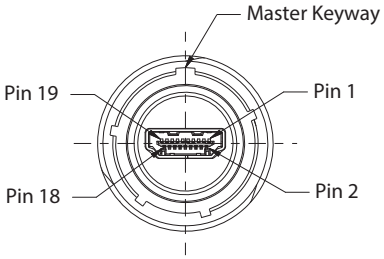

Horizontal

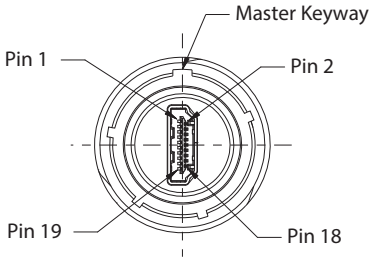

Vertical

Plug

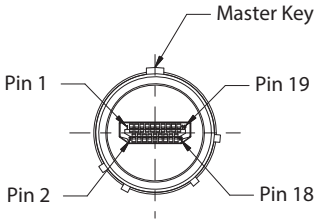

Horizontal

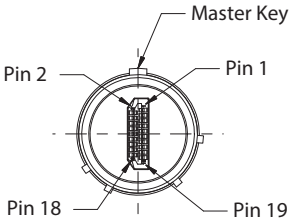

Vertical

© 2018 Glenair, Inc • 1211 Air Way, Glendale, CA 91201 • 818-247-6000 • www.glenair.com • U.S. CAGE code 06324 • SuperNine Catalog
Dimensions in Inches (millimeters) are subject to change without notice.

MIL-DTL-38999 Series III Type Connectors

233-367 HDMI to PC Tail connector receptacle with standoffs



Part Number Development						
Sample Part Number	**233-367**	**NF**	**00**	**-17**	**N**	**H**
Basic Number	**233-367**					
Finish	See Material and Finish table					
Connector Style	See Connector Style table					
Shell Size	**17**					
Alternate Key Position[1]	**A**, **B**, **C**, **D**, **E**, **N** = Normal per MIL-DTL-38999					
HDMI Orientation	**H** = Horizontal **V** = Vertical					



Material and Finish		
NF	Aluminum	Cadmium, Olive Drab Over Electroless Nickel (500 Hour Salt Spray)
ME		Electroless Nickel (96 Hour Salt Spray)
ZR		Black Zinc-Nickel (Tri-Valent CR)
XM	Composite	Electroless Nickel
Z1	Stainless Steel	Passivate
AB	Marine Bronze	None (Clean Only)

Additional material / finish options available consult factory

Connector Style	
00	Wall mount receptacle with slotted holes
D0	Wall mount receptacle with round holes
CM	Wall mount receptacle with metric clinch nuts
07	Rear panel mount, jam nut receptacle

DO - WALL MOUNT RECEPTACLE WITH SLOTTED HOLES

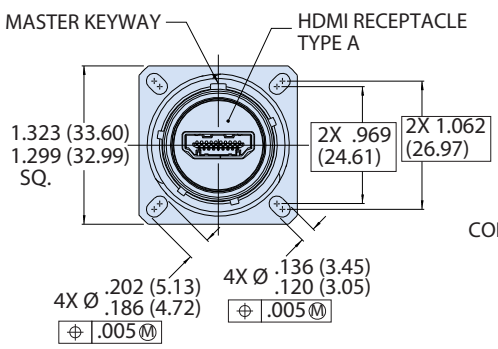

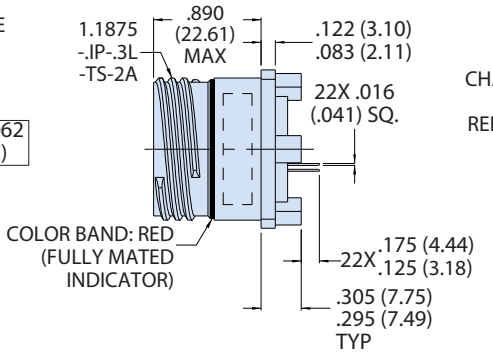

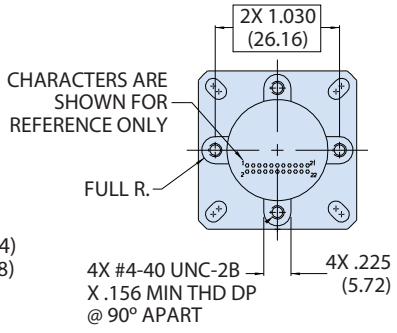

NOTES

1. HDMI Performance: Design meets HDMI 2.0 protocol requirement including 18Gbps of bandwidth and supports 4K resolution and 60Hz.
2. Receptacle connector designed to meet IP67 unmated condition.
3. HDMI Specifications
   - Performance: See Note 1
   - DWV: 300VAC
   - IR: 100 Mega 0hms MIN
   - Operating Temperature: -20°C to +85°C
4. Material and Finish
   - Shell, jam nut: see material finish table
   - Seals: silicone based elastomer
   - Hardware: stainless steel/passivated
5. HDMI:
   - Housing: thermoplastic/NA
   - Shell: copper alloy nickel plated
   - Terminal: copper alloy/gold plated

© 2016 Glenair, Inc • 1211 Air Way, Glendale, CA 91201 • 818-247-6000 • www.glenair.com • U.S. CAGE code 06324 • SuperSeal Catalog

Dimensions in Inches (millimeters) are subject to change without notice.

N

DO - WALL MOUNT RECEPTACLE WITH ROUND HOLES

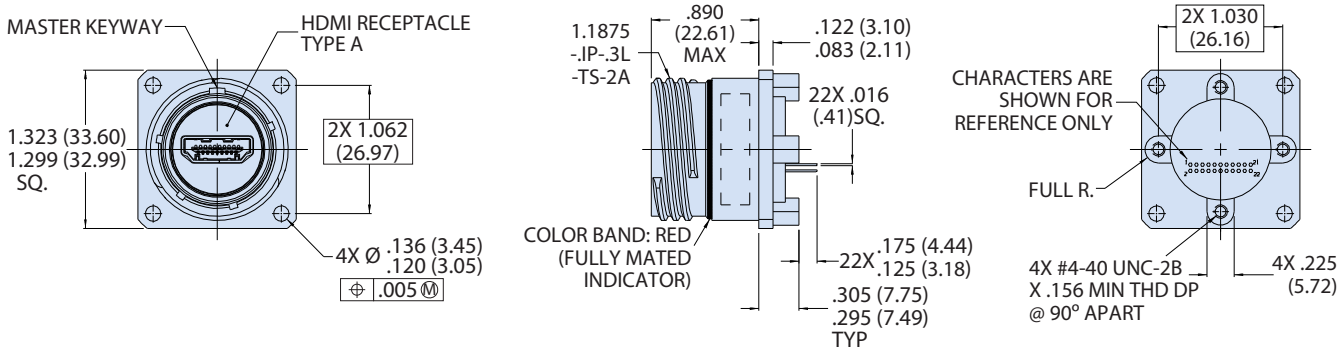

CM - WALL MOUNT RECEPTACLE WITH METRIC CLINCH NUTS

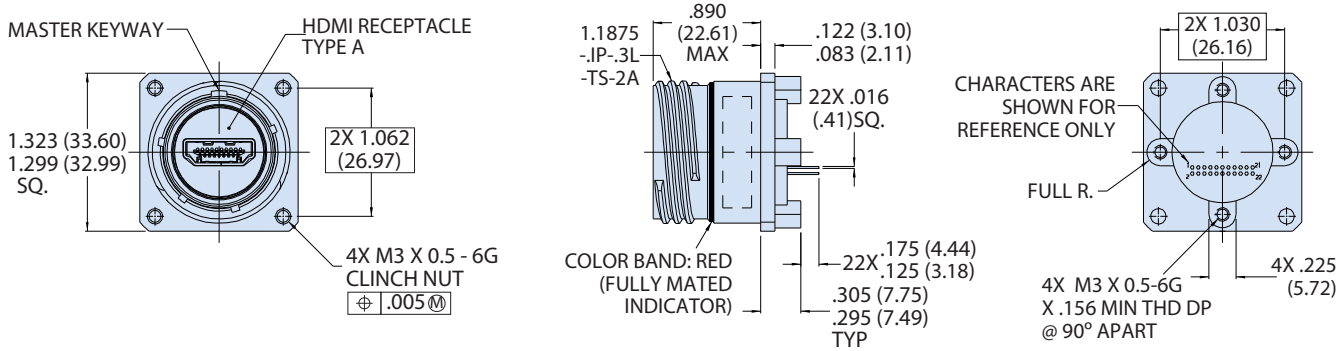

07 - JAM NUT MOUNT RECEPTACLE

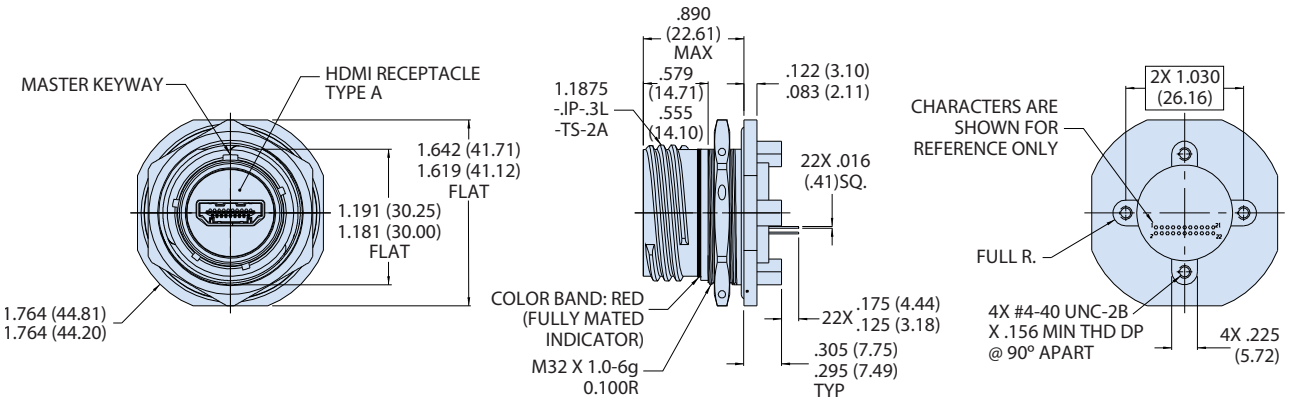

© 2016 Glenair, Inc • 1211 Air Way, Glendale, CA 91201 • 818-247-6000 • www.glenair.com • U.S. CAGE code 06324 • Catalog Title
Dimensions in Inches (millimeters) are subject to change without notice.

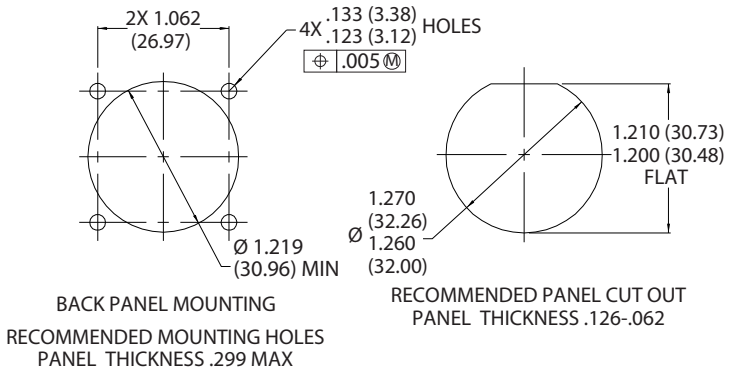

BACK PANEL MOUNTING

RECOMMENDED MOUNTING HOLES
PANEL THICKNESS .299 MAX

RECOMMENDED PANEL CUT OUT
PANEL THICKNESS .126-.062

WIRING DIAGRAM

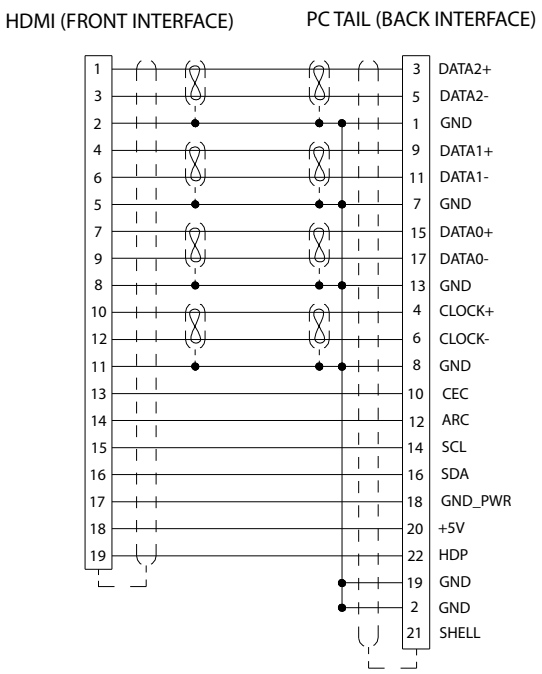

HDMI ORIENTATION OPTIONS
(PARTIAL VIEWS SHOWN)

HORIZONTAL

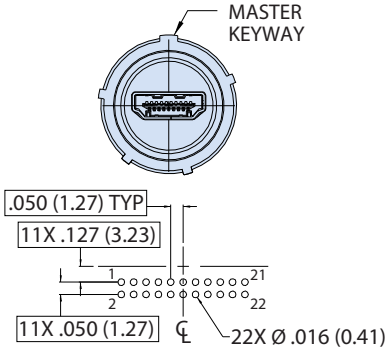

PCB LAYOUT (SOLDER SIDE)

VERTICAL

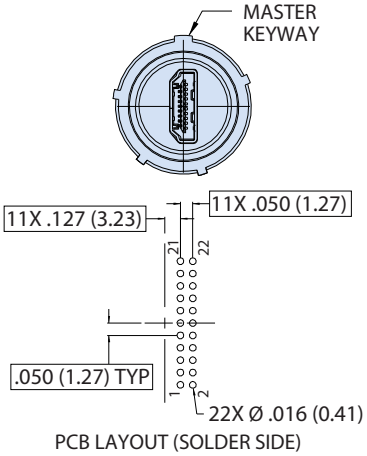

PCB LAYOUT (SOLDER SIDE)

DISPLAYPORT

MIL-DTL-38999 Series III Type Connectors

233-376 Connector receptacle with shielded DisplayPort coupler

Part Number Development						
Sample Part Number	**233-376**	**NF**	**00**	**-17**	**N**	**H**
Basic Number	**233-376**					
Finish	See Material and Finish table					
Connector Style	See Connector Style table					
Shell Size	**17**					
Alternate Key Position	**A**, **B**, **C**, **D**, **E**, **N** = Normal per MIL-DTL-38999					
DisplayPort Orientation	**H** = Horizontal **V** = Vertical					

Material and Finish		
NF	Aluminum	Cadmium, Olive Drab Over Electroless Nickel (500 Hour Salt Spray)
ME		Electroless Nickel (96 Hour Salt Spray)
ZR		Black Zinc-Nickel (Tri-Valent CR)
XM	Composite	Electroless Nickel
Z1	Stainless Steel	Passivate
AB	Marine Bronze	None (Clean Only)

Additional material / finish options available consult factory

Wiring Diagram					
Signal Name	**P1**	**P2**	**Signal Name**	**P1**	**P2**
ML_LANE 0(p)	1	1	ML_LANE 3(n)	12	12
ML_LANE 0(n)	3	3	GND	11	11
GND	2	2	CONFIG1	13	13
ML_LANE 1(p)	4	4	CONFIG2	14	14
ML_LANE 1(n)	6	6	AUX CH(p)	15	15
GND	5	5	AUX CH(n)	17	17
ML_LANE 2(p)	7	7	GND	16	16
ML_LANE 2(n)	9	9	Hot Plug Detect	18	18
GND	8	8	DP_PWR Return	19	19
ML_LANE 3(p)	10	10	DP_PWR	20	20

Connector Style	
00	Wall mount receptacle with slotted holes
D0	Wall mount receptacle with round holes
CM	Wall mount receptacle with metric clinch nuts
CS	Wall mount receptacle with standard clinch nuts
07	Rear panel mount, jam nut receptacle
05	Rear panel mount, inline receptacle

DISPLAYPORT ORIENTATION OPTIONS
(PARTIAL FRONT VIEWS SHOWN)

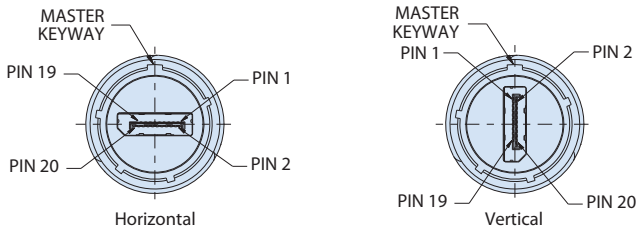

NOTES

1. Interpret drawing per ASME Y14.5 - 2009.
2. Modified major diameter 31.80 - 31.95 (1.252 - 1.257).
3. Material/finishes:
   - Shell, jam nut: see Material/Finish table
   - (Composite coupling nut no plating required).
   - Seals: silicone based elastomer
   - Hardware: stainless steel/passivated
4. Displayport
   - Housing: thermoplastic/N.A.
   - Shell: copper alloy/nickel plated
   - Terminal: copper alloy/ gold plated
5. Displayport specifications:
   - Performance: see note 8.
   - D.W.V.: 500 VAC (unmated)
   - I.R.: 100 Mega ohms min.
   - Operating temperature range: -20°C to +85°C
6. Front panel mount only.
7. Receptacle connector designed to meet IP67 unmated condition.
8. Performance: design meets displayport 1.4 Benchmark data transfer rate requirements.

© 2016 Glenair, Inc • 1211 Air Way, Glendale, CA 91201 • 818-247-6000 • www.glenair.com • U.S. CAGE code 06324 • SuperSeal Catalog
Dimensions in Inches (millimeters) are subject to change without notice.

00 - WALL MOUNT RECEPTACLE WITH SLOTTED HOLES

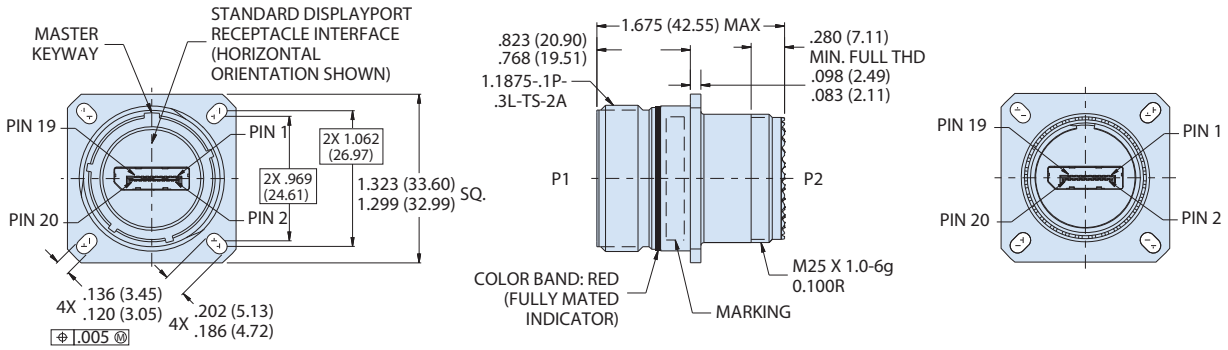

DO - WALL MOUNT RECEPTACLE WITH ROUND HOLES

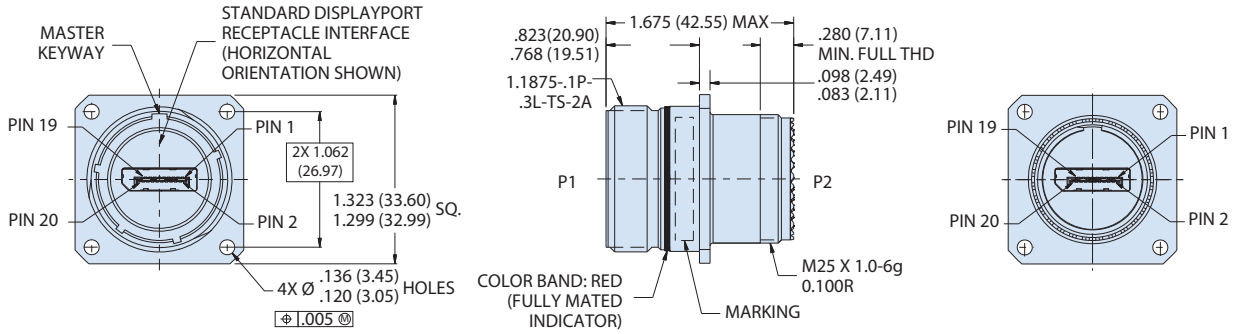

CM - WALL MOUNT RECEPTACLE WITH METRIC CLINCH NUTS

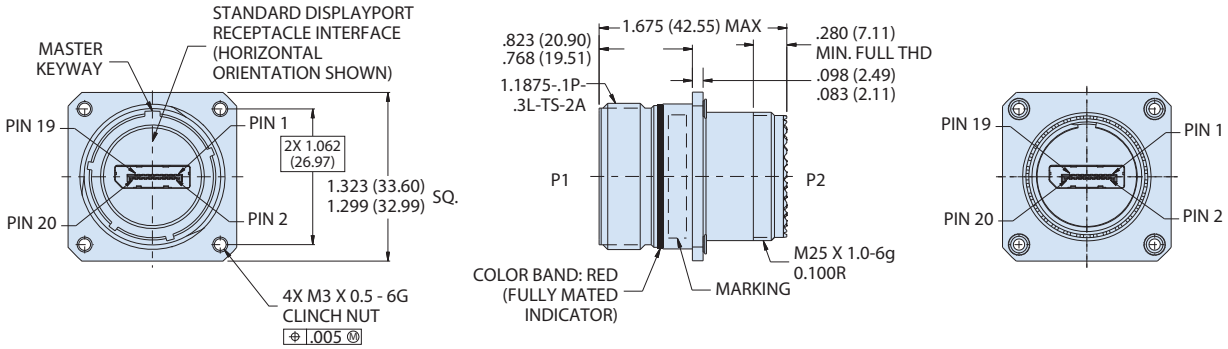

© 2016 Glenair, Inc • 1211 Air Way, Glendale, CA 91201 • 818-247-6000 • www.glenair.com • U.S. CAGE code 06324 • SuperSeal Catalog
Dimensions in Inches (millimeters) are subject to change without notice.

N

CS - WALL MOUNT RECEPTACLE WITH STANDARD CLINCH NUTS

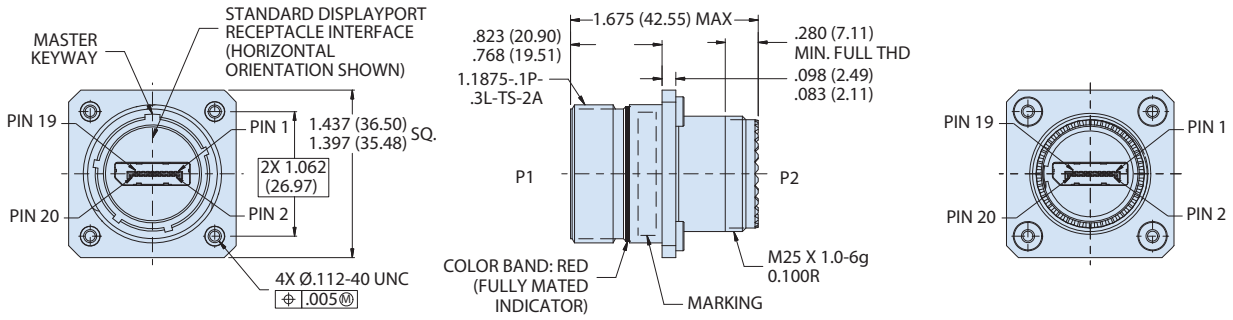

07 - JAM NUT MOUNT RECEPTACLE

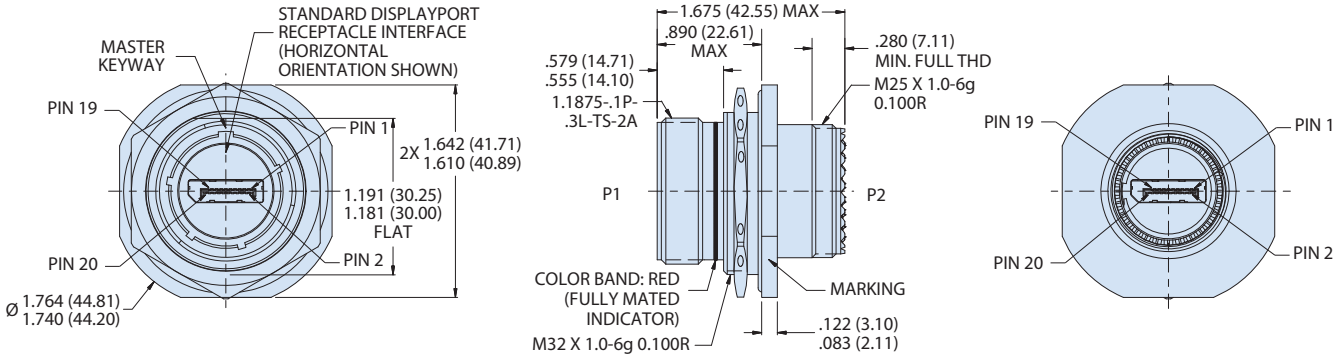

05 - INLINE RECEPTACLE

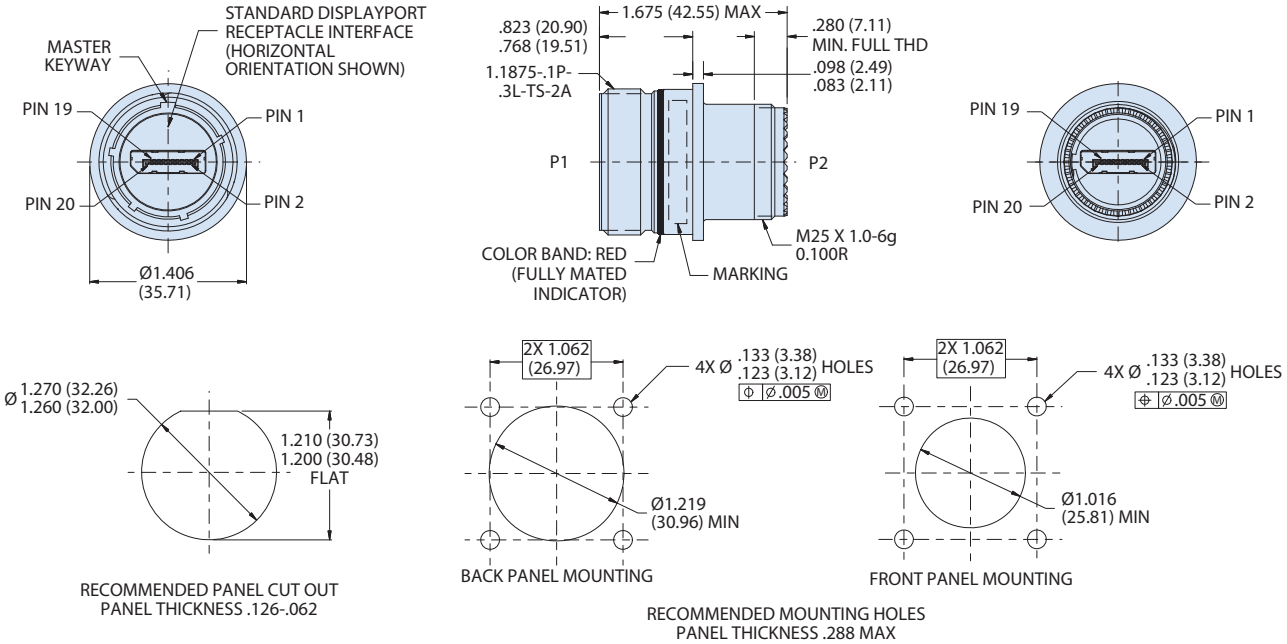

© 2016 Glenair, Inc • 1211 Air Way, Glendale, CA 91201 • 818-247-6000 • www.glenair.com • U.S. CAGE code 06324 • SuperSeal Catalog
Dimensions in Inches (millimeters) are subject to change without notice.



Part Number Development						
Sample Part Number	**233-379**	**NF**	**00**	**-17**	**N**	**H**
Basic Number	**233-379**					
Finish	See Material and Finish table					
Connector Style	See Connector Style table					
Shell Size	**17**					
Alternate Key Position	**A**, **B**, **C**, **D**, **E**, **N** = Normal per MIL-DTL-38999					
DisplayPort Orientation	**H** = Horizontal **V** = Vertical					

Material and Finish		
NF	Aluminum	Cadmium, Olive Drab Over Electroless Nickel (500 Hour Salt Spray)
ME		Electroless Nickel (96 Hour Salt Spray)
ZR		Black Zinc-Nickel (Tri-Valent CR)
XM	Composite	Electroless Nickel
Z1	Stainless Steel	Passivate
AB	Marine Bronze	None (Clean Only)

Additional material / finish options available consult factory

Connector Style	
00	Wall mount receptacle with slotted holes
D0	Wall mount receptacle with round holes
CM	Wall mount receptacle with metric clinch nuts
CS	Wall mount receptacle with standard clinch nuts
07	Rear panel mount, jam nut receptacle

00 - WALL MOUNT RECEPTACLE WITH SLOTTED HOLES

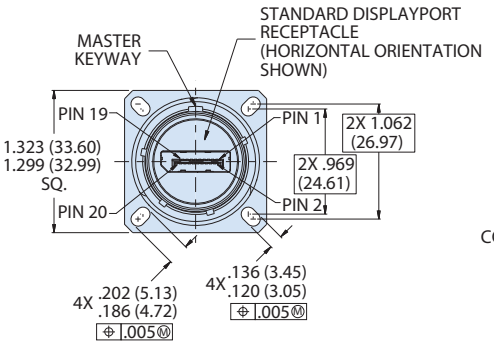

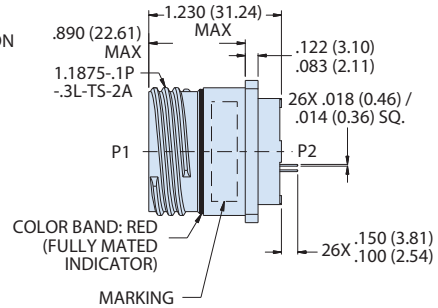

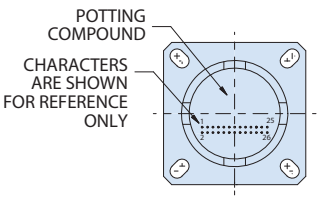

NOTES

1. Interpret drawing per ASME Y14.5 - 2009.
2. Modified major diameter 31.80 - 31.95 (1.252 - 1.257).
3. Material/finishes:
   - Shell, jam nut: see Material/Finish table
   - (Composite coupling nut no plating required).
   - Seals: silicone based elastomer
   - Hardware: stainless steel/passivated
4. Displayport
   - Housing: thermoplastic/N.A.
   - Shell: copper alloy/nickel plated
   - Terminal: copper alloy/ gold plated
5. Displayport specifications:
   - Performance: see note 8.
   - D.W.V.: 500 VAC (unmated)
   - I.R.: 100 Mega ohms min.
   - Operating temperature range: -20°C to +85°C
6. Front panel mount only.
7. Receptacle connector designed to meet IP68 unmated condition.
8. Performance: design meets displayport 1.4 benchmark data transfer rate requirements.

© 2016 Glenair, Inc • 1211 Air Way, Glendale, CA 91201 • 818-247-6000 • www.glenair.com • U.S. CAGE code 06324 • SuperSeal Catalog
Dimensions in Inches (millimeters) are subject to change without notice.

Rev. 04.09.24

233-379 Connector receptacle with DisplayPort to PC tail termination

DO - WALL MOUNT RECEPTACLE WITH ROUND HOLES

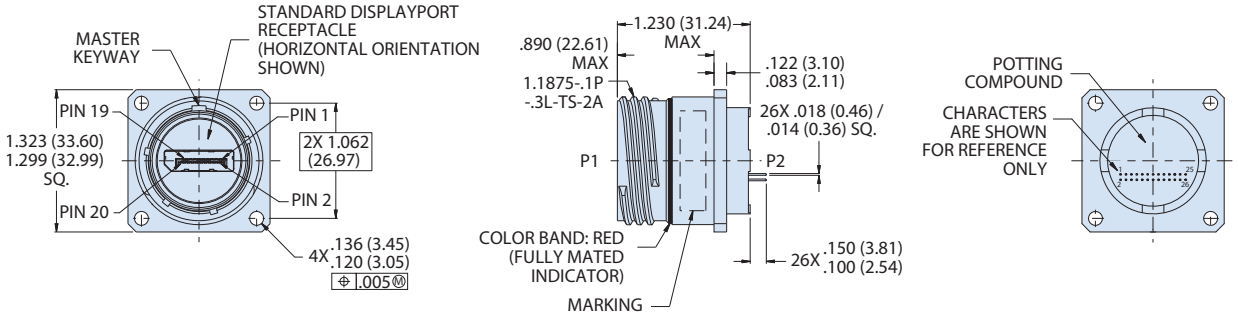

CM - WALL MOUNT RECEPTACLE WITH METRIC CLINCH NUTS

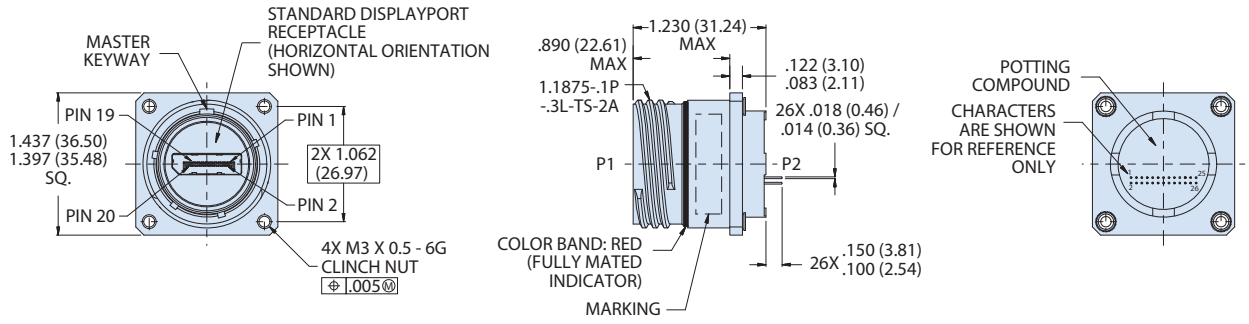

CS - WALL MOUNT RECEPTACLE WITH STANDARD CLINCH NUTS

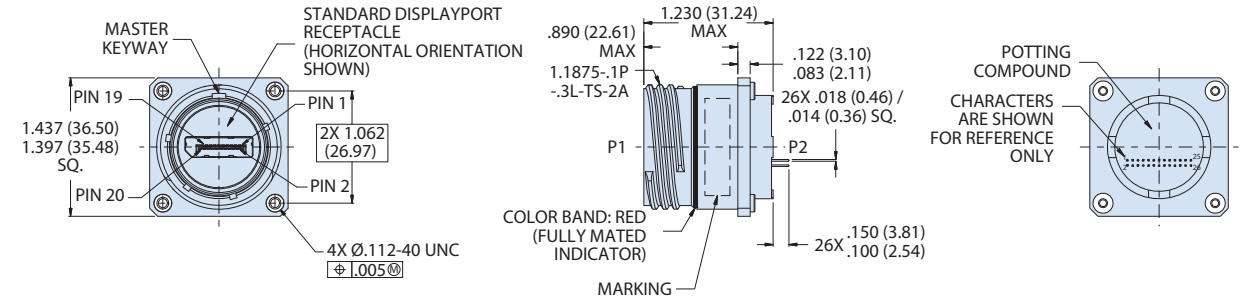

© 2016 Glenair, Inc • 1211 Air Way, Glendale, CA 91201 • 818-247-6000 • www.glenair.com • U.S. CAGE code 06324 • SuperSeal Catalog
Dimensions in Inches (millimeters) are subject to change without notice.

N

07 - JAM NUT MOUNT RECEPTACLE

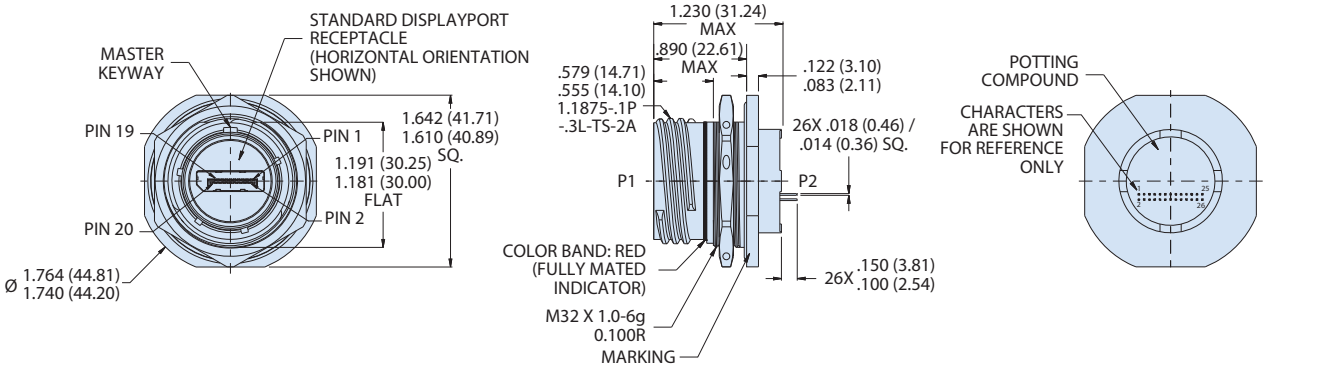

WIRING DIAGRAM

SIGNAL NAME	P1 (DP CONNECTOR SIDE)	P2 (PCB SIDE)	
ML_LANE 0(p)	1	3	ML_LANE 0(p)
ML_LANE 0(n)	3	7	ML_LANE 0(n)
GND	2	5	GND
ML_LANE 1(p)	4	9	ML_LANE 1(p)
ML_LANE 1(n)	6	13	ML_LANE 1(n)
GND	5	11	GND
ML_LANE 2(p)	7	15	ML_LANE 2(p)
ML_LANE 2(n)	9	19	ML_LANE 2(n)
GND	8	17	GND
ML_LANE 3(p)	10	21	ML_LANE 3(p)
ML_LANE 3(n)	12	25	ML_LANE 3(n)
GND	11	23	GND
CONFIG1	13	10	CONFIG1
CONFIG2	14	8	CONFIG2
AUX CH(p)	15	20	AUX CH(p)
AUX CH(n)	17	22	AUX CH(n)
GND	16	18	GND
HOT PLUG DETECT	18	14	HOT PLUG DETECT
DP_PWR RETURN	19	24	DP_PWR RETURN
DP_PWR	20	26	DP_PWR
		12	GND
		6	GND
		1	NC
		2	NC
		16	NC
SHIELD	SHELL	4	(TO SHIELD)

DISPLAYPORT ORIENTATION OPTIONS
(PARTIAL FRONT VIEWS SHOWN)

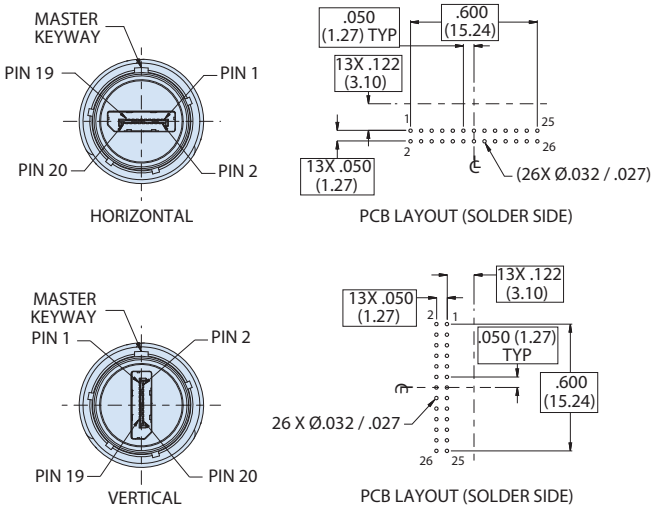

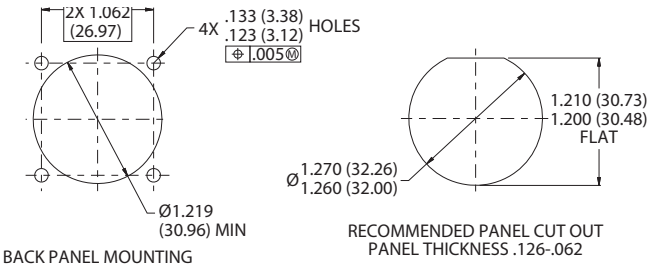

© 2016 Glenair, Inc • 1211 Air Way, Glendale, CA 91201 • 818-247-6000 • www.glenair.com • U.S. CAGE code 06324 • SuperSeal Catalog
Dimensions in Inches (millimeters) are subject to change without notice.

Rev. 04.09.24

DISPLAYPORT

MIL-DTL-38999 Series III Type Connectors

233-389 DisplayPort plug with strain relief cable sealing backshell

Material and Finish		
NF	Aluminum	Cadmium, Olive Drab Over Electroless Nickel (500 Hour Salt Spray)
ME		Electroless Nickel (96 Hour Salt Spray)
ZR		Black Zinc-Nickel (Tri-Valent CR)
Z1	Stainless Steel	Passivate
AB	Marine Bronze	None (Clean Only)

Additional material / finish options available consult factory

Part Number Development							
Sample Part Number	**233-389**	**NF**	**G6**	**A**	**17**	**N**	**H**
Basic Number	**233-389**						
Material/Finish	See Material and Finish table						
Connector Style	**G6** = Plug						
Overmold Boot Style	**A**						
Shell Size	**17**						
Alternate Position	**A, B, C, D, E, N** = Normal per MIL-DTL-38999						
DisplayPort Orientation	**H** = Horizontal **V** = Vertical						

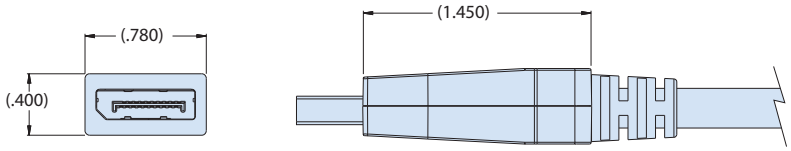

RECOMMENDED DISPLAYPORT PLUG OVERMOLD - STYLE A

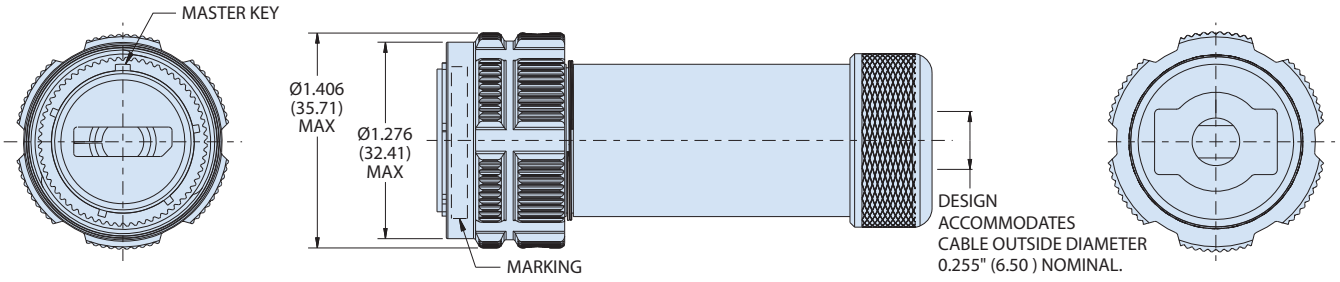

NOTES

1. Interpret drawing per ASME Y14.5 - 2009.
2. Modified major diameter 31.80 - 31.95 (1.252 - 1.257).
3. Material/finishes:
   - Barrel, coupling nut: see Material/Finish table (composite coupling nut no plating required).
   - Insulators: high grade rigid dielectric/N.A.
   - Seals: silicone based elastomer
   - USB adapter housing: UL94V-0 compliant ABS or PPS
   - Hardware: stainless steel/passivated
4. Displayport specifications:
   - Performance: DP 1.4
   - D.W.V.: 500 VAC (unmated)
   - I.R.: 100 Mega ohms min.
   - Operating temperature range: -20°C to +85°C
5. Front panel mount only.
6. Plug connector designed to meet IP68 unmated condition.
7. Design accommodates cable outside diameter 0.255" (6.50 mm) nominal.

DISPLAYPORT ORIENTATION OPTIONS

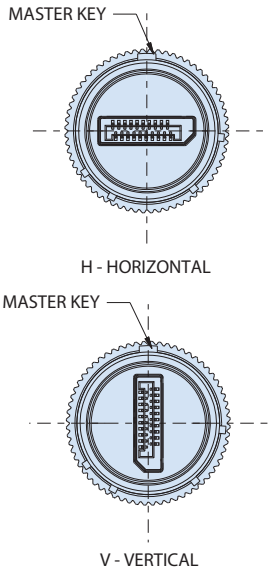

© 2016 Glenair, Inc • 1211 Air Way, Glendale, CA 91201 • 818-247-6000 • www.glenair.com • U.S. CAGE code 06324 • SuperSeal Catalog
Dimensions in Inches (millimeters) are subject to change without notice.

Why Choose GLENAIR?



Plenty of Raw Materials!



Outstanding Customer Service!



In-House Assembly!



Abundant Machining Capacity!



Huge "Same-Day" Inventory!



One of North America's and Machining



High-Production Injection Molding Equipment



State-of-the-Art Plating Capabilities



The Industry's Most Experienced EMI/RFI Braided Shielding Specialists

Glenair®



Largest CNC Milling Installations



Clean Rooms for Filter Array and Printed Circuit Board Assembly

Out of This World

INTERCONNECT SOLUTIONS

Glenair, Inc.
1211 Air Way • Glendale, California • 91201-2497
Telephone: 818-247-6000 • Fax: 818-500-9912 • sales@glenair.com
www.glenair.com

Glenair Power Products Group
860 N. Main Street Extension
Wallingford, CT
06492
Telephone: 203-741-1115
Facsimile: 203-741-0053
sales@glenair.com

Glenair Microway Systems
7000 North Lawndale Avenue
Lincolnwood, IL
60712
Telephone: 847-679-8833
Facsimile: 847-679-8849

Glenair Electric GmbH
Schaberweg 28
61348 Bad Homburg
Germany
Telephone: 06172 / 68 16 0
Facsimile: 06172 / 68 16 90
info@glenair.de

Glenair Italia S.p.A.
Via Del Lavoro, 7
40057 Quarto Inferiore –
Granarolo dell'Emilia
Bologna, Italy
Telephone: +39-051-782811
Facsimile: +39-051-782259
info@glenair.it

Glenair Korea
B-1304 Gunpo IT Valley
148 Gosan-Ro, Gunpo-Si
Kyunggi-Do, Korea
435-733
Telephone: +82-31-8068-1090
Facsimile: +82-31-8068-1092
sales@glenair.kr

Glenair UK Ltd
40 Lower Oakham Way
Oakham Business Park
P.O. Box 37, Mansfield
Notts, NG18 5BY England
Telephone: +44-1623-638100
Facsimile: +44-1623-638111
sales@glenair.co.uk

Glenair Nordic AB
Gustav III : S Boulevard 46
SE-169 27 Solna
Sweden
Telephone: +46-8-50550000
sales@glenair.se

Glenair Iberica
C/ La Vega, 16
45612 Velada
Spain
Telephone: +34-925-89-29-88
Facsimile: +34-925-89-29-87
sales@glenair.es

Glenair France SARL
7, Avenue Parmentier
Immeuble Central Parc #2
31200 Toulouse
France
Telephone: +33-5-34-40-97-40
Facsimile: +33-5-61-47-86-10
sales@glenair.fr

© 2016 Glenair, Inc.

Printed in U.S.A.